PENTAIR

Schroff®

MAIN CATALOG

EQUIPMENT PROTECTION SOLUTIONS | 12/2017

DESIGN WITH CONFIDENCE®

Pentair, together with its Hoffman®, McLean® and Schroff® brands, is a leading manufacturer of products and solutions for the housing, protection and cooling of electrical and electronic assemblies and components.

Under the slogan "Design with CONFIDENCE®" the company offers the highest standards across the industry for quality, performance and design. Pentair offers a vast diversity of off-the-shelf products as well as modified and customized solutions for applications in the measurement and instrumentation, telecommunications and data processing, energy and industrial, transport and medical industries and for electronic systems for security and defense.

When you enter a partnership with Pentair you are drawing on the capabilities of a company that has all the necessary financial and other resources at its disposal to develop, manufacture and assemble application-critical systems to your requirements, down to defined function testing and prompt delivery of the goods anywhere in the world.

Regional Headquarters
Anoka, MN, USA
Boituva, Brazil
Straubenhardt, Germany
Singapore
Shanghai, China

Manufacturing and Logistics Locations
Pharr, TX, USA
Anoka, MN, USA
Mt. Sterling, KY, USA
Radford, VA, USA
Warwick, RI, USA
San Diego, CA, USA
Boituva, Brazil
Melbourne, Australia
Reynosa, Mexico
Betschdorf, France
Straubenhardt, Germany
Dzierzoniow, Poland
Bangalore, India
Qingdao, China
Meiwa, Japan

PENTAIR

Pentair Equipment Protection brands

Hoffman® McLean® Schroff®

pentairequipmentprotection.com

INNOVATIVE, SOPHISTICATED, CUSTOMER-ORIENTED AND WITH GLOBAL PRESENCE: Schroff

The **Schroff®** brand stands for recognized, globally leading developments in electronics packaging components and systems for applications in measurement, instrumentation and control systems, infrastructure, security systems, data communications, telecommunications and automation. Our customer-oriented thinking and mode of working is an important element of our business model.

At a glance: what sets Schroff products apart:

- Certified to global standards
- Global availability
- Outstanding quality
- Innovative solutions
- Comprehensive heat management
- Large off-the-shelf product program
- Modifications to your requirements
- Custom new developments
- Customer-oriented thinking and operations
- Service quality and competence
- Extensive testing
- Best price-performance ratio

SIX STEPS TO THE RIGHT PRODUCT

1. APPLICATION

The choice of enclosure often depends on the field of application and/or market segment. Does your product require a door, shelves, slide rails or a support arm for a monitor? Is ease of access important? Do you require cooling for your components, redundancy or electromagnetic shielding? Many details are required to enable you to select the correct enclosure. You can find more technical information about electromagnetic compatibility on page 12.6.

2. ENVIRONMENT

Environmental conditions are perhaps the most important factor when selecting the correct enclosure. Is it intended for use in, say, telecommunications, industry, measurement and control, infrastructure or security systems, or as a data communications system? You should also consider the main challenges the enclosure will face, such as:

- electromagnetic radiation
- shock and vibration
- corrosion
- the required loading capacity
- dust or sand
- fire
- extreme temperatures
- low atmospheric pressure

Deciding these considerations simplifies the choice of the best product for your needs. You can find further information in the appendix on pages 12.3-12.6

3. STANDARDS

Select an enclosure that satisfies the required standard of protection for the environment and application in question. The evaluation criteria of protection classes such as NEMA, UL, cUL, Telcordia GR-487, CSA, DIN, VDE, GOST, RoHS, CE, IEC, EN, NFF, BN, IEEE, PICMG and VITA are a measure of the capability of an enclosure to withstand specific environmental conditions. Note however that these protection classes differ from one another in important aspects. Further technical information is available in the appendix on pages 12.1-12.7 and in our Standards Summary brochure, which you can order from our website www.schroff.biz/catalogues.

4. SIZE

Several factors must be considered when specifying the size of the enclosure. What materials should it be built from? Where in the enclosure will the assemblies be fitted?
Will you be installing devices on a mounting plate? Will you be fitting operating elements to a door? Does your application have specific requirements for the location of the enclosure?

5. MATERIAL

Select the most suitable material for your product, taking into consideration the potential environmental risks and possible contamination by harmful substances against which you must protect the enclosure.
– steel
– stainless steel
– aluminum
– fiberglass
– ABS
– polycarbonate
– polyester

We will then help you select the most suitable surface finish:
– electroplating
– hot-dip galvanizing
– passivation
– anodization
– paint (various compositions)
Further technical information is available in the appendix on pages 12.4-12.5 and in our Standards Summary brochure (pages 26-33), which you can order from our website www.schroff.biz/catalogues.

6. THERMAL MANAGEMENT

Faster and more powerful assemblies produce ever more waste heat.
Effective thermal management is therefore important to ensure optimum efficiency and service life for the electronic components. While in most cases the central task is to monitor and dissipate the heat generated, there are also circumstances in which heating is necessary. Some basic questions for determining the appropriate cooling method for your application include:
Which enclosure surfaces allow heat transfer?
How much heat is generated by each installed component?
What temperature conditions must be observed?

Will your application be used in a closed room or out of doors?
Will the cooling device be fitted on the top, the side or within the enclosure?
With the help of your Schroff contact, select the most suitable cooling solution from our wide product range in section 4. You will also find more solutions on the Pentair McLean website www.mcleancoolingtech.com or in the McLean catalog, in the "McLean V-Series" and "McLean Thermoelectric Coolers" brochures and in the main Pentair Hoffman catalog, which you can order from www.schroff.biz/catalogues.

ServicePLUS

configuration — Simple. Fast. To the ideal product.

We help you to build your ideal product out of off-the-shelf components quickly, competently and simply with interactive online configurators, our telephone configuration hotline and Power Search, which lets you select standard components fast
www.schroff.co.uk/configuration

assembly — Built by professionals. Double the benefit.

For turnkey products, ServicePLUS assembly lets you keep your attention on your core activity without interruption, while we carry out the complete assembly of all your system components, competently and on time; competently and on time
www.schroff.co.uk/assembly

modification — Minor modifications. Large impact.

Quality also means 100% accuracy of fit. We therefore also modify off-the-shelf products to your individual needs, for example, drilled holes, cut-outs, printing and special colors.
www.schroff.co.uk/modification

solution — Simple. Fast. From one source.

If it is not possible to use off-the-shelf products, we will create a special custom solution - from development and design through to complete, integrated, functioning systems or even highly specific new developments.
www.schroff.co.uk/solution

express — When fast has to be even faster.

In many projects speed is of the essence, and flexibility a decisive criterion. With us you can select your delivery time from a range of express options.

support — Support. Solution. Availability.

ServicePLUS support is our after-sales service and sets up an ongoing relationship with you. We offer a modular range of support options that can be tailored to your specific service requirements.
www.schroff.co.uk/support

academy — Know. Share. Become a partner.

With ServicePLUS academy we offer you straightforward access to our specialist knowledge. This includes:

- Seminars and training about our products
- Modern knowledge transfer using webcasts, white papers and webinars
- Technical reports, technical details and CAD drawings available by download

www.schroff.co.uk/academy

lifecycle — We stay with you. For the entire life of the product.

With ServicePLUS lifecycle you profit from our flexibly configurable, comprehensive support over the entire life of your products and complete solutions. Select options from our range to your exact needs and create your individual Lifecycle package.
www.schroff.co.uk/lifecycle

HOW TO CONTACT US

Your local contact

ALL CONTACT DETAILS FOR YOUR PERSONAL CONTACT PARTNER ARE HERE:
Online at www.schroff.biz/contact or in the address list at the end of this catalog.

YOUR ONLINE CONTACT WITH SCHROFF
At **www.schroff.biz** you can reach us round the clock.
Use the inquiry basket to inquire online about the articles you require, simply and without complication, and receive a quotation within 24 hours.

WE WILL ANSWER YOUR INQUIRY WITHIN 24 HOURS
Just send us an inquiry or order by e-mail to **schroff.uk@pentair.com** or to your personal contact. You can naturally also send us a fax.

PENTAIR BUSINESS PARTNER DISTRIBUTOR PARTNERING TO WIN RIGHT
Hoffman McLean Schroff

PENTAIR BUSINESS PARTNER VALUE ADDED RESELLER PARTNERING TO WIN RIGHT
Hoffman McLean Schroff

For customers who prefer quick and reliable processing when ordering stock products by authorized and qualified business partners, our **distribution partners** are the first choice. If you are looking for professional support for adapting our products to your individual needs, contact our **value-added resellers.**

These can of course also supply off-the-shelf products. Decide together with us whether you would like support either from our direct sales department or through our business partners in various countries.
See www.schroff.biz/contact for the advantages of the different sales and distribution options.

HOW TO OBTAIN OUR PRODUCTS

ONLINE

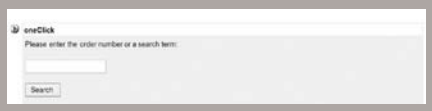

You will see our oneClick symbol next to many products in this catalogue. By entering the order number at **www.schroff.biz/oneclick** you can quickly and easily obtain further information about the relevant product.

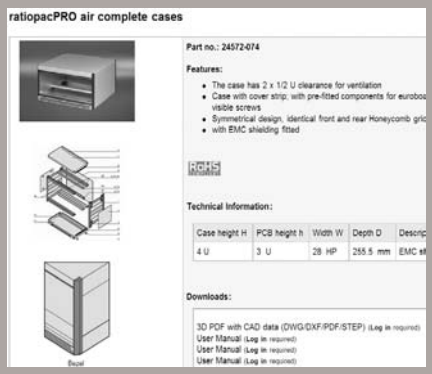

- detailed product description
- scope of delivery information
- detailed drawings
- technical information
- user manuals
- test reports
- downloadable CAD drawings
- certificates
- test reports

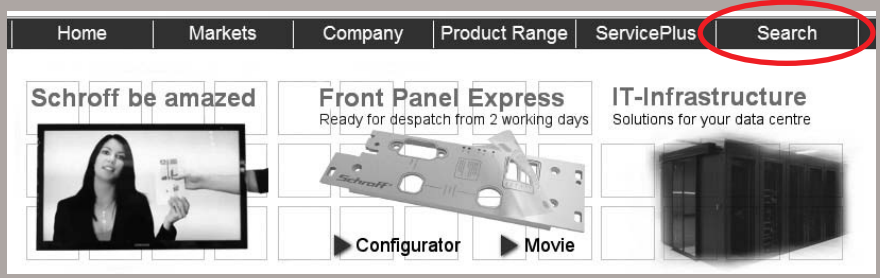

You can also use the free text search available at www.schroff.biz under "Search" in the function bar:

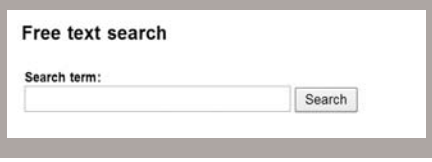

Apart from the order number, you can also enter product names or other terms.

Catalogue

Order Information

For cabinet depth	Usable surface w x d	x_f	c	RAL 7035	RAL 7021
mm	mm	mm	mm	Part no.	Part no.
600	495 x 442	50	500	22130-303	21130-303
800	495 x 642	50	700	22130-305	21130-305
Strengthening rail for stationary 19" shelf PU 1 piece					23130-310

Note

- Cable ducting with cable ties, see page 1.25
- Other sizes, see ServicePLUS, page 1.49

For further information www.schroff.biz/oneclick
oneClick search code = Part no.

To help you get your bearings quickly and simply, all the ordering tables in this catalog are uniformly designed:

- The first section contains the ordering information for the product.
- The next section, indicated by a separating line, shows suitable accessories.

- Order numbers printed in bold are available for shipping in 2 working days; order numbers in ordinary type can be shipped within 10 working days.
- Further information, if available, on the product or accessories is shown at the end of the ordering table.

Cabinets 1

Overview ... 1.0
Varistar Cabinet platform ... 1.2
Varistar Electronics ... 1.10
Varistar EMC ... 1.54
Varistar Seismic ... 1.84
Varistar MIL ... 1.120
Varistar Data/network systems ... 1.124
Varistar Containment ... 1.202
LHX 20/40 Air/water heat exchangers ... 1.224
LHX 3 Air/water heat exchangers ... 1.236
Novastar ... 1.240
Eurorack ... 1.270
Outdoor ... 1.316
Etsirack ... 1.346
19" lab racks ... 1.354
PROLINE ... 1.362

Wall mounted case 2

Overview ... 2.0
Epcase ... 2.36
LAN wall-mounted distributors ... 2.46

Cabinet and wall-mounted case accessories 3

Overview ... 3.0
Mechanics ... 3.2
Telescopic slides ... 3.24
Electrical ... 3.29
Monitors, keyboards, monitoring ... 3.44
Socket strips ... 3.50
Power control socket strips ... 3.72

Climate control 4

Overview ... 4.0
Cooling concepts/service ... 4.2
19" fan trays ... 4.4
Air filtered fans ... 4.20
Accessories ... 4.58

Desktop enclosures 5

Overview ... 5.0
RatiopacPRO ... 5.6
PropacPRO ... 5.44
CompacPRO ... 5.76
Comptec ... 5.100
Accessories ... 5.108
Interscale ... 5.200
Minipac ... 5.230

Subracks/ 19" chassis 6

Overview ... 6.0
EuropacPRO ... 6.2
EuropacPRO for railroad applications ... 6.70
EuropacPRO industrial applications ... 6.86
EuropacPRO Rugged ... 6.92
MultipacPRO ... 6.112
Inpac ... 6.128

Front panels, Plug-in-units, Frame type plug-in-units 7

Overview ... 7.0
Front panels ... 7.2
Plug-in units ... 7.16
Frame type plug-in units ... 7.64
PCB accessories ... 7.102

Systems 8

Overview ... 8.0
AdvancedTCA ... 8.2
AdvancedMC carriers ... 8.26
MicroTCA ... 8.36
AdvancedMC modules ... 8.56
CompactPCI, Serial, PlusIO, PSB ... 8.68
VME, VME64x, VXS, VPX ... 8.88
Accessories ... 8.106

Power supply systems 9

Overview ... 9.0
19" AC/DC switched-mode PSUs ... 9.2
19" AC/DC linear regulators ... 9.12
19" AC/DC convertors ... 9.15
19" accessories ... 9.18
PSUs for MicroTCA ... 9.20
PSUs for VMEbus ... 9.22
PSUs for CompactPCI, VME64x ... 9.24

Backplanes 10

Overview ... 10.0
CompactPCI, Serial, PlusIO ... 10.4
PXI ... 10.11
VXS ... 10.14
VME64x, VMEbus ... 10.15
Power ... 10.18
Universal ... 10.19
Test adaptors ... 10.20

Connectors, Front panel component systems 11

Overview ... 11.0
Connectors ... 11.2
Front panel component system ... 11.12

Appendix 12

Standards abbreviations ... 12.0
Notes on ordering ... 12.10
Order number index ... 12.11
Product index ... 12.62

Cabinets 1
Wall mounted cases 2
Accessories for cabinets and wall mounted cases . 3
Climate control . 4
Electronics cases 5
Subracks/ 19" chassis 6
Front panels, plug-in units . . . 7
Systems 8
Power supply units 9
Backplanes . . . 10
Connectors, front panel component system 11
Appendix 12

VARISTAR

- Cabinet platform for many application areas like electronics, datacom and networking technologies
  - 19" or metric versions
  - EMC shielded
  - Earthquake-proof
  - Variable cooling concepts
  - Air-conditioned cabinets
  - Extensive range of innovative cable routing accessories
- Welded steel frame for static load-carrying capacity of up to 1200 kg
- Type of protection IP 20 or IP 55

NEW

NOVASTAR

- 19" electronics cabinet for applications in the measurement and control, audio and video industries
- Attractive design with visible profile frame, inset cladding parts and full glass doors
- Cabinet height from 6 U to 47 U
- Cabinet width only 553 mm
- Screw fixed aluminium rack for static load-carrying capacity of up to 400 kg
- Type of protection up to IP 40

eurorack

- 19" cabinet for electronics applications
- Screw fixed aluminium frame for static load-carrying capacity of up to 400 kg
- Type of protection IP 40

36109003 (01006007 01005001 07011036 00105003)

Overview 1.2

VARISTAR 1.2
VARISTAR Electronics 1.10
VARISTAR EMC 1.54
VARISTAR Seismic 1.84
VARISTAR MIL 1.120
VARISTAR Datacom and Networking Technology 1.124
VARISTAR Aisle Containments 1.202
VARISTAR Air/water heat exchanger 1.224

NOVASTAR 1.240

eurorack 1.270

Outdoor 1.316

etsirack 1.346

Lab racks 1.354

PROLINE 1.362

Cabinet Accessories 3.0

Outdoor

- Aluminium cabinet for outdoor use and to accommodate 19", metric or non-standardized components
- Type of protection IP 55
- Single-wall or double-wall versions
- Static load-carrying capacity up to 400 kg

etsirack

- Designed for telecommunications applications in accordance with the ETS standard
- Steel construction, 300 mm deep
- Static load-carrying capacity 200 kg
- Type of protection IP 20

Lab Racks

- Open 19" frame for lab applications, stationary or mobile
- Steel construction
- Static load-carrying capacity 200 kg

36109004 (41602001 40012001 05601002 01305003)

Content

Cabinets 1

Wall mounted cases 2

Accessories for cabinets and wall mounted cases . 3

Climate control . 4

Electronics cases 5

Subracks/ 19" chassis 6

Front panels, plug-in units . . . 7

Systems 8

Power supply units 9

Backplanes . . . 10

Connectors, front panel component system 11

Appendix 12

Cabinets – VARISTAR

VARISTAR Electronics

- Open cabinets with decorative frame
- 19" cabinets with IP 20 or IP 55 protection class
- Extensive range of innovative accessories for electronics cabinets

VARISTAR EMC

- Shielding up to 60 dB at 1 GHz and 40 dB at 3 GHz
- High shielding also when combined with perforated doors or fan top covers
- Individual configuration options with ServicePLUS configuration

VARISTAR Seismic

- Earthquake-resistant cabinets tested to Bellcore Zone 4
- Individual configuration options with ServicePLUS configuration

VARISTAR MIL

NEW

- Tested and certified to MIL 901D
- With shock absorbers
- Shielded against high-frequency interference
- IP 55

36108003 (01006007, 01004031, 01007002, 01005018, 01012004)

Cabinets – VARISTAR

Overview 1.2

VARISTAR Data and networking technology

- Wide range of network and server cabinet versions
- Server cabinets with depths up to 1200 mm
- Two standard colors: light grey (RAL 7035) or black grey (RAL 7021)
- Extensive, innovative range of cable routing accessories
- Individual configuration options with ServicePLUS configuration

VARISTAR Platform 1.4
VARISTAR Electronics 1.10
VARISTAR EMC 1.54

VARISTAR Aisle containments

NEW

- Cold aisle containments
- Modular standard components
- Extensive range of swing and sliding doors

VARISTAR Seismic 1.84
VARISTAR MIL 1.120
VARISTAR Datacom and Networking Technology 1.124

VARISTAR with air/water heat exchangers

LHX 20/40

- Server cabinets with air/water heat exchanger
- Versions with single or double doors and with automatic door opening

LHX 3

- Electronics cabinets with LHX 3 air/water heat exchanger

36108004 (01006006, 01006015, 01012006, 01007015, 01006040)

VARISTAR Aisle containment.... 1.202
VARISTAR Air/water heat exchangers..... 1.224
Cabinet Accessories.... 3.0

Cabinets – VARISTAR platform

Two load-carrying classes, one accessory range: The VARISTAR frames

01004035

VARISTAR is the only cabinet platform that allows identical accessories to be combined with two basic frames.
The cabinet is available in Slim-Line (narrow) or Heavy-Duty (robust) profiles.

Slim-Line profile

The Slim-Line version is based on very thin steel profiles in order to obtain the greatest opening width between the uprights. This frame can accommodate either 19" equipment or metric components to ETS 3000-119-3. With a maximum load of 400 kg* on the 19" plane the frame is still highly robust and suitable for demanding applications in electronics or data and network technology.

Heavy-Duty profile

The Heavy-Duty frame, on the other hand, is designed for use with heavy loads or in regions susceptible to earthquakes. It offers on the one hand maximum stability for a load of up to 800 kg* on the 19" plane and, thanks to its high bending stiffness, can meet the shock and vibration requirements such as occur in railway and traffic signal installations, in the control of rotating machines, on commercial ships or in low-level military installations.
In the IEC 61587-2 earthquake test the Heavy-Duty frame qualified for use in Bellcore Zone 3. Equipped with very simple, low-cost strengthening brackets, the VARISTAR Seismic version meets the demands of Bellcore Zone 4.

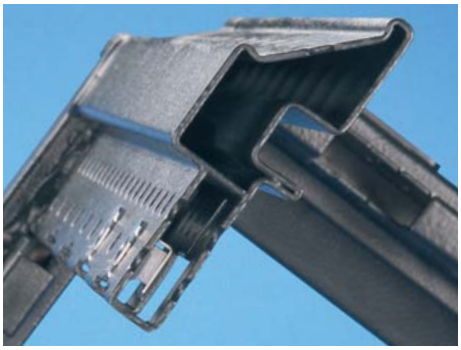
01006035
Slim-Line profile

01006034
Heavy-Duty profile

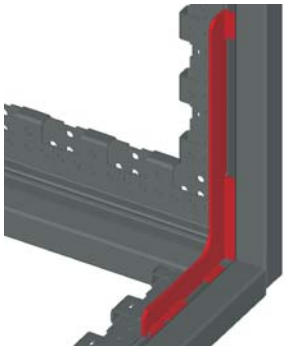
01008062
Heavy-duty profile with strengthening bracket

	Standard	Slim-Line	Heavy-Duty	
Static load-carrying capacity	IEC 61587-1	400 kg *	800 kg *	
Type of protection	IEC 60529	IP 20, IP 55	IP 20, IP 55	
Shock test	IEC 61587-1	Maximum acceleration: 5 g Duration: 11 ms	Maximum acceleration: 5 g Duration: 11 ms	
Vibration test	IEC 61587-1	Frequency: 5 Hz -100 Hz Acceleration: 1 g	Frequency: 5 Hz -100 Hz Acceleration: 1 g	
Earthquake test	IEC 61587-2		Standard: up to Bellcore Zone 3, acceleration: 3 g, Frequency: 1 Hz ... 5 Hz	With strengthening: up to Bellcore Zone 4, acceleration: 5 g, Frequency: 2 Hz ... 5 Hz
EMC shielding	IEC 61587-3	60 dB at 1 GHz, 40 dB at 3 GHz	60 dB at 1 GHz, 40 dB at 3 GHz	
Installing options		19" or ETS	19"	

* Figures for static load-carrying capacity are based on the IEC 61587-1 test procedure. In this procedure the cabinet is standing on the floor under its equipment load and lifted up by its lifting eyes; no significant deformations may occur on the frame or at the 19" panel/slide mounts under maximum carrying capacity. The potential load for the VARISTAR frame is therefore, under normal operating conditions, considerably higher than the test value given under IEC 61587-1.

Cabinets – VARISTAR platform

Decidedly different: The VARISTAR sealing and shielding concept

Item	Description
1	Frame
2	Conductive EMC textile gasket with CuNi coating
3	Contact/shielding
4	Rear panel
5	Side panel

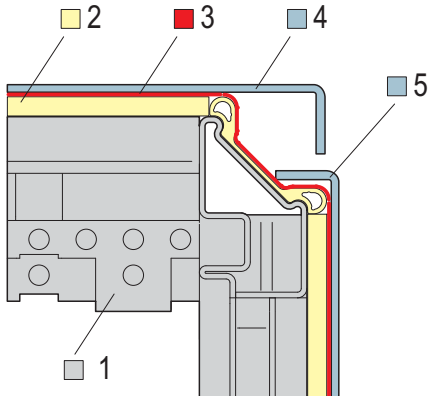

In most shielding designs currently available, conductive seals or springs connect the cover parts to the cabinet frame. The points of contact have thus to be kept conductive and corrosion-free.
With VARISTAR, however, the conductive textile gaskets link the cover parts with one another directly, which results in two advantages:
A considerably better shielding performance of 60 dB at 1 GHz (and 40 dB at 3 GHz) is obtained than with conventional designs. There is no longer any need for expensive treatment of the frame surface. The textile EMC gasket is also a protection against dust and water to IP 55. If no shielding is required, a rubber gasket is used offering the same protection to IP 55. Both gaskets are fitted to the 45°-angled surface of the exterior of the frame.

Shielding up to 3 GHz

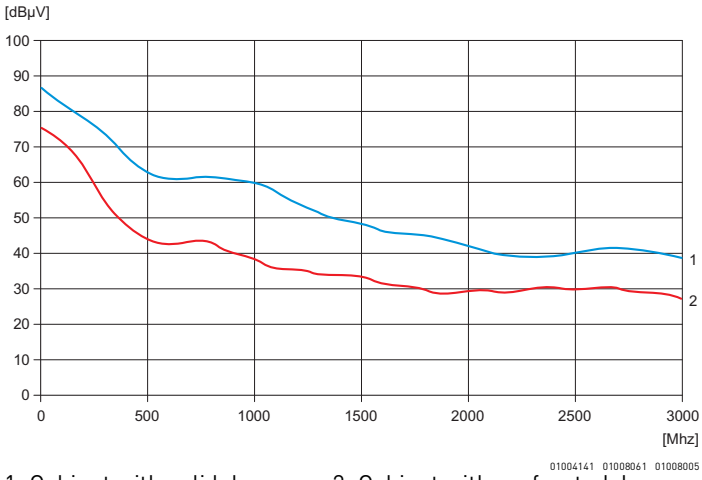

1: Cabinet with solid door 2: Cabinet with perforated door

Smooth-running and absolutely tight: The VARISTAR locking system

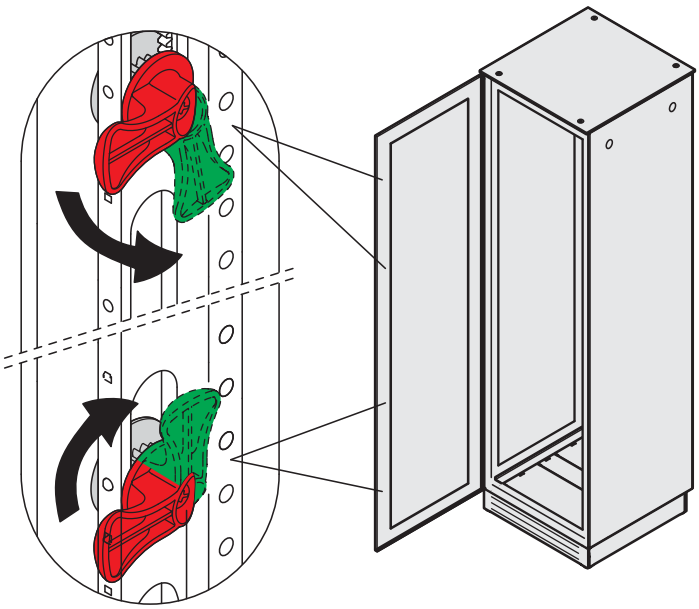

The latching system also contributes to protection class and shielding.
The innovative locking bar accepts a variable number of deadbolts, depending on the cabinet height, to ensure the most even compression of the gaskets.
And best of all: Activating the locking bar causes the latches to move in the opposite direction. Thus the frictional forces of the bolts are balanced out and a resulting lopsided vertical force on the door is avoided. The doors close easily and with an absolute seal.
EMC doors are fitted with 4-point locking, IP and server doors with 3-point locking.

Cabinets – VARISTAR platform

Peerless and efficient: The VARISTAR profile (Slim-Line and Heavy-Duty)

Mounting of the 19" bracket without depth members

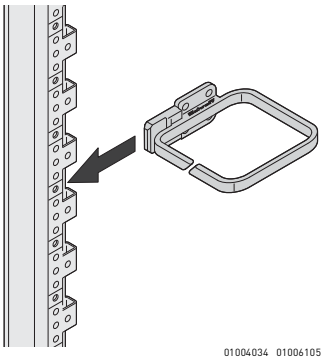

Self-fixing cable eyes

The VARISTAR profile has fixing holes in all three axes (height, width, depth), following a 25 mm grid. This allows for the greatest variability in the fitting of components and accessories. Thus for example 19" panel/slide mounts may be installed in a 600 mm wide cabinet without additional depth members. This saves costs and provides stability on the 19" plane.
The intricately shaped form of the profile offers further new assembly possibilities. Cable eyes, for instance, can be plugged directly into the frame whilst fixing themselves.

New and well thought out: VARISTAR cable management

Schroff has divided the available space in the VARISTAR into zones and given a simple description of the position and use of these zones. The coloured arrows show the direction of the cable ducting.

For each zone a range of accessories has been developed to suit the conditions in the cabinet, which simplifies cabling and thus helps to include as many connections as possible in a distribution cabinet. The VARISTAR profile with its many fixing options has thus proved a real boon.

Zone 1

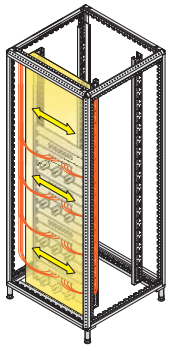

- In front of the 19" plane
- In this zone the patch cables are ducted horizontally between the distribution fields

Zone 2

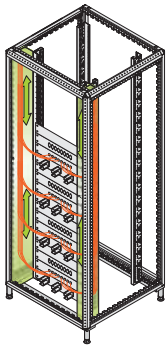

- On the right and left hand side, next to the 19" plane
- In this zone patch cables are ducted vertically in a kind of channel to the individual components

Zone 3

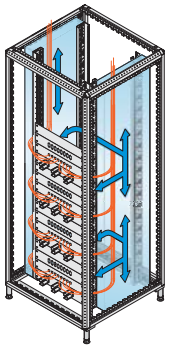

- Zone 3 is located laterally behind the 19" plane across the cabinet depth; mainly for 800 mm wide cabinets
- In this zone entering cable bundles are fixed in the cabinet, parted and ducted to the rear of the distribution fields

Zone 4

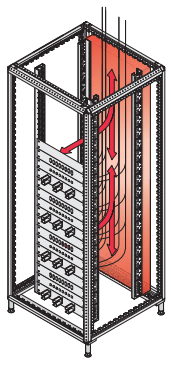

- Zone 4 is located in the rear across the cabinet width
- Alternative to zone 3 for only 600 mm wide cabinets or when cable entry is at the rear of the cabinet

Cabinets – VARISTAR platform

Heat dissipation to exact requirements: cooling concepts for VARISTAR

Depending on installed heat dissipation and the surroundings, VARISTAR offers various cooling options and also good conditions for problem-free operation of the installed equipment.
Either top cover fans are used to assist the heat dissipation or perforated doors with 78 % air throughput are fitted.
Additionally, VARISTAR LHX 20/40 with assembled air/water heat exchanger allows to cool especially strained appliances with water. And that for up to 40 kW per cabinet.

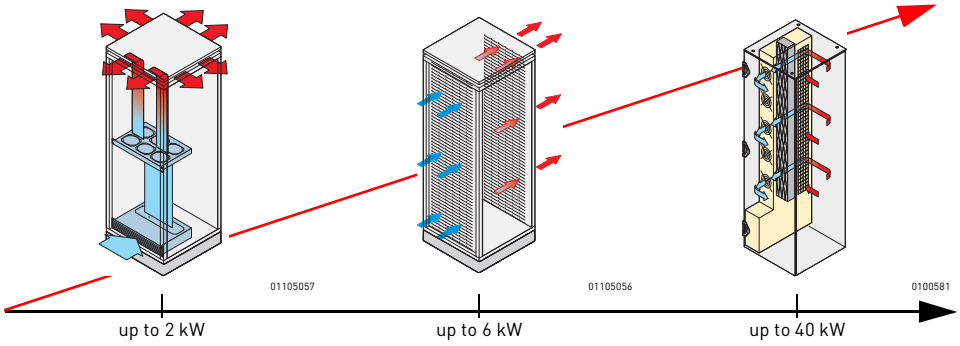

01106027

Fan unit, positioned inside

41003017

78 % air throughput

01005020

Air/water heat exchanger

Classic and consistent: VARISTAR colour and design

As well as its functional aspects, in the development of VARISTAR the design of the individual components and their combined effect on the appearance of the cabinet was always a priority. The cabinet gains its characteristic, unmistakable look from the high narrow door with the memorable hinges and the very thin, almost inconspicuous top cover edge.
While rack, base and cover are offered in black grey (RAL 7021) for all standard cabinets, a choice of two colour options are available - even in our standard programme - for side panels, doors and rear panels:

Either entirely black grey (RAL 7021), as is the contemporary look in data centres and recording studios. Or in light grey (RAL 7035), whereby an attractive combination of mainly light surfaces with a few dark accents is obtained.
Alternatively, VARISTAR can be supplied in many RAL colours within 15 working days, or even as a combination of two special colours. The current range of colours can be seen online at www.schroff.co.uk/modification.

01006037

Colour RAL 7021 (black grey)

01006036

Colour combination RAL 7035/RAL 7021 (light grey/black grey)

Cabinets – VARISTAR platform

Frame dimensions

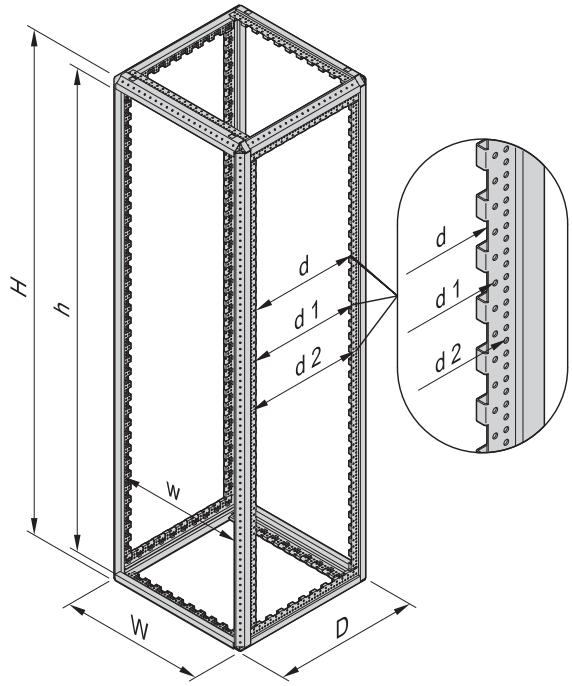

01005087

Height

Cabinet height		Frame	
		H	h
mm	U	mm	mm
1200	24	1192	1102
1400	29	1392	1302
1600	33	1592	1502
1800	38	1792	1702
2000	42	1992	1902
2200	47	2192	2102

Width

Cabinet width	Frame	Slim-Line	Heavy-Duty
	W	w	w
mm	mm	mm	mm
600	592	535	502
800	792	735	702

Depth

Cabinet depth		Frame		
	D	d	d_1	d_2
mm	mm	mm	mm	mm
300	292	128.8	150	175
600	592	428.8	450	475
800	792	628.8	650	675
900	892	728.8	750	775
1000	992	828.8	850	875
1100	1092	928.8	950	975
1200	1192	1028.8	1050	1075

Adjustable feet

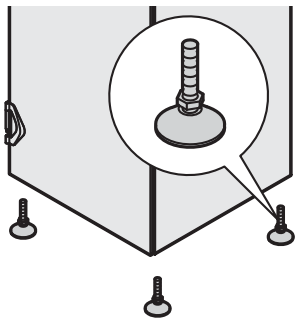

01004081

Castors with adjustable feet

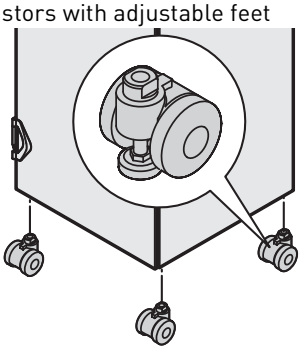

Locking castors

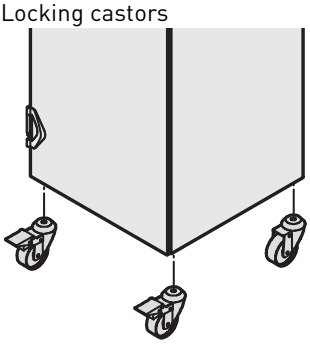

01004082 01004156

Height of adjustable feet, castors, base/plinth

Adjustable feet	20 ... 40 mm
Locking castors	85 mm
Castors with adjustable feet	85 ... 95 mm
Base/plinth (feet)	112 ... 132 mm
Base/plinth, mobile	126.5 ... 134.5 mm

Base/plinth

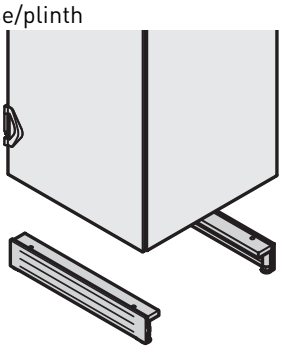

Mobile base/plinth

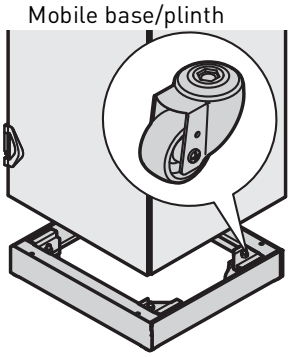

0100411001004111

Cabinets – VARISTAR platform

Top cover with cut-out zones

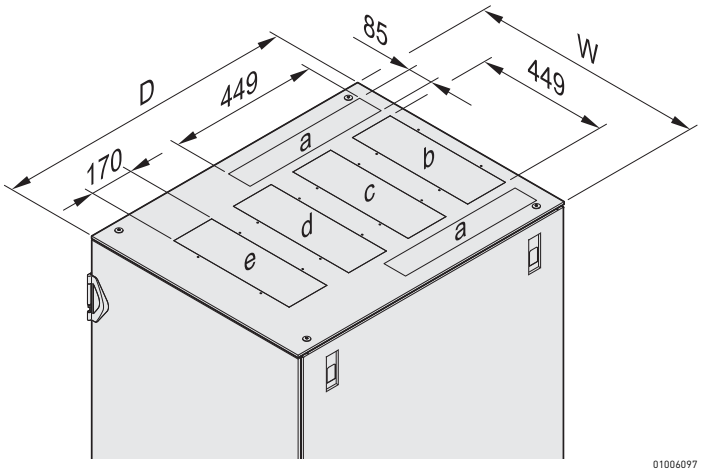

	W = 600 mm					W = 800 mm				
D	**a**	**b**	**c**	**d**	**e**	**a**	**b**	**c**	**d**	**e**
600	-	✓	✓	-	-	-	✓	✓	-	-
800	-	✓	✓	✓	-	✓	✓	✓	✓	-
900	-	✓	✓	✓	-	✓	✓	✓	✓	-
1000	-	✓	✓	✓	✓	✓	✓	✓	✓	✓
1100	-	✓	✓	✓	✓	✓	✓	✓	✓	✓
1200	-	✓	✓	✓	✓	✓	✓	✓	✓	✓

Base plate, multi-piece

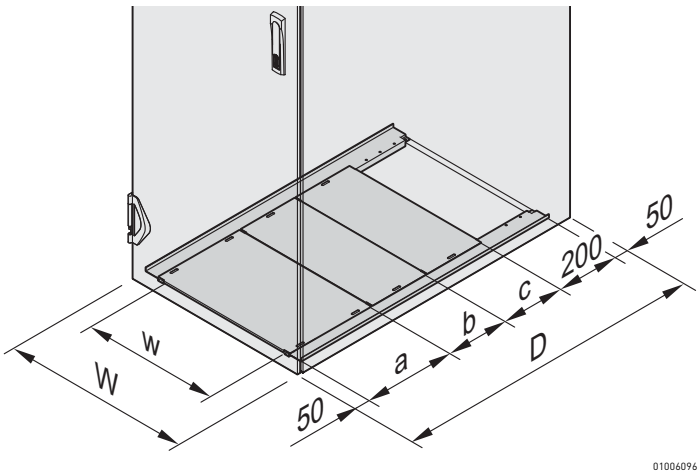

	Depth in mm		
D	**a**	**b**	**c**
600	300	-	-
800	300	200	-
900	300	300	-
1000	300	200	200
1100	300	300	200
1200	300	300	300

Cabinet width	**Opening width**
W	**w**
mm	**mm**
600	426
800	626

Content

Cabinets 1

Wall mounted cases 2

Accessories for cabinets and wall mounted cases . 3

Climate control . 4

Electronics cases 5

Subracks/ 19" chassis 6

Front panels, plug-in units . . . 7

Systems 8

Power supply units 9

Backplanes . . . 10

Connectors, front panel component system 11

Appendix 12

Cabinets – Varistar Electronics

01008004

01009002

19" panel mounts integrated in decorative frame

01005014

All-round gasketing to IP 55

01009002

Side panels with quick-release fastener, optionally lockable

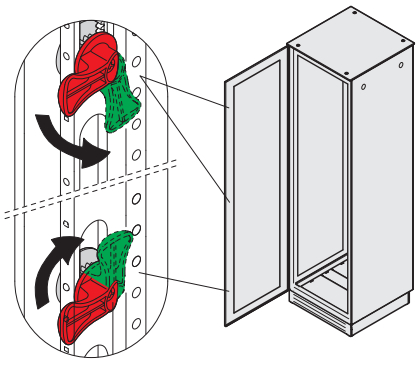

01005014

3-point locking with contradirectional bolts

Cabinets – Varistar Electronics

Overview 1.10

The universal cabinet for electronics

- Selectable stability, static load-carrying capacity up to 800 kg
- Professional solutions for cable ducting
- Variable ventilation concepts, active and passive
- Various versions in ServicePLUS configuration

VARISTAR Deco

- Open at front, with deco frame and integrated 19" panel mounts

VARISTAR IP 20

- With glass door and single point locking

VARISTAR IP 55

- With glass or steel door and 3-point locking

30407004

ServicePLUS from page 1.26

e.g. individual configuration and assembly
e.g. modifications (cut-outs, special colours)
e.g. variants of uprights (Slim-Line, Heavy-Duty)
e.g. custom solutions (special sizes)

www.schroff.biz/ServicePLUS

VARISTAR Platform 1.4
Dimensions 1.8

VARISTAR Deco .. 1.12
VARISTAR IP 20 .. 1.13
VARISTAR IP 55 .. 1.14

Accessories
Lever handle 1.15
Base plate 1.15
Base/plinth 1.16
Mounting plate ... 1.17
19" swing frame 1.18
19 panel/slide mount 1.19
19" fixing materials kit, M6 ..... 1.19
Slide rails 1.20
19" shelves 1.21
Depth members .. 1.24
C horizontal rail .. 1.24
Cable tie, Velcro 1.25

ServicePLUS ... 1.26
ServicePLUS IP 20 ..... 1.27
ServicePLUS IP 55 ..... 1.39
ServicePLUS Interior configuration 1.44

VARISTAR EMC ...1.54
VARISTAR Seismic 1.84
VARISTAR Datacom and Networking Technology 1.124
VARISTAR air/water heat exchanger 1.224

Cabinets – Varistar Electronics

Varistar Deco

- Open at front (no door)
- 19" panel mounts integrated into decoration frame
- Rear door with single point locking, side panels with quick release fastener
- Static load-carrying capacity 400 kg (Slim-Line)

Delivery comprises (assembled)

Item	Qty	Description
1	1	Welded basic frame, Slim-Line, St profile, zinc-plated, powder-coated, RAL 7021
2	4	Adjustable foot, assembled
3	1	Raised top cover, St, RAL 7021, with 10 mm air gap all around
4	1	Decorative frame, Al, integrated 19" panel mounts at the front, RAL 7035
5	2	Adapter bracket, St, 2 mm, RAL 7035, front, for assembling shelves and slide rails
6	1	Rear door, St, 180° hinge, single point locking and key with safety lock, RAL 7035
7	2	Side panel, St, with quick-release fastener, RAL 7035
8	1	GND/earthing kit, supplied loose

Order Information

Height U	Height H mm	Width W mm	Depth D mm	Part no.
38	1800	600	600	**10130-001**
38	1800	600	800	**10130-002**
42	2000	600	600	**10130-003**
42	2000	600	800	**10130-004**
Castors load-carrying capacity 400 kg, PS/St, PU 4 pieces, 2 locking, 2 non locking				**23130-077**
Castors with integrated adjustable feet load-carrying capacity 400 kg, PU 4 pieces				**23130-078**
Lever handle for single point locking with push button, 1 piece				**23130-067**
DIN profile half cylinder, common locking for lever handle (1 key fits all locks) incl. 2 keys				**25127-995**
Lifting eye for raised top cover PU 4 pieces				**23130-085**

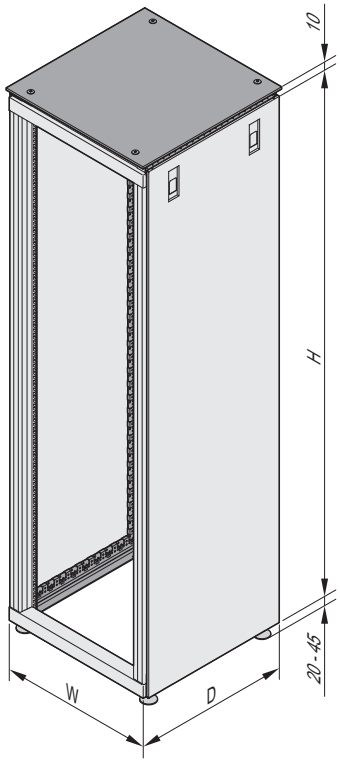

01004151

Note

- Lever handle can be added to rear door
- For more dimensions and versions see ServicePLUS IP 20, starting on page 1.27
- Please order base plate separately, see page 1.15
- Please order base/plinth separately, see page 1.16
- For assembly of shelves and slide rails another pair of panel/slide mounts is necessary, see page 1.19

ServicePLUS see page 1.26

Cabinets – Varistar Electronics

Varistar IP 20

01004002

- With glazed front door
- Doors with single point locking, side panels with quick release fastener
- Type of protection IP 20
- Static load-carrying capacity 400 kg (Slim-Line)

Delivery comprises (assembled)

Item	Qty	Description
1	1	Welded basic frame, Slim-Line, St profile, zinc-plated, powder-coated, RAL 7021
2	4	Adjustable foot, assembled
3	1	Raised top cover, St, RAL 7021, with 10 mm air gap all around
4	1	Front door, glazed, safety glass, 6 mm, 180° hinge, RAL 7035, single point locking, key lock cover
5	1	Rear door, St, 180° hinge, RAL 7035, single point locking, key with safety lock
6	2	Side panel, St, quick-release fastener with safety lock, RAL 7035
7	2	19" panel/slide mount with EIA cut-outs, St, RAL 7035, assembled at front, depth-adjustable in 25 mm increments
8	1	GND/earthing kit, enclosed loose

Order Information

Height U	Height H mm	Width W mm	Depth D mm	Part no.
38	1800	600	600	**10130-005**
38	1800	600	800	**10130-006**
42	2000	600	600	**10130-007**
42	2000	600	800	**10130-008**
Castors load-carrying capacity 400 kg, PS/St, PU 4 pieces, 2 locking, 2 non locking				**23130-077**
Castors with integrated adjustable feet load-carrying capacity 400 kg, PU 4 pieces				**23130-078**
Lever handle for single point locking with push button, 1 piece				**23130-067**
DIN profile half cylinder, common locking for lever handle (1 key fits all locks) incl. 2 keys				**25127-995**
Lifting eye for raised top cover PU 4 pieces				**23130-085**

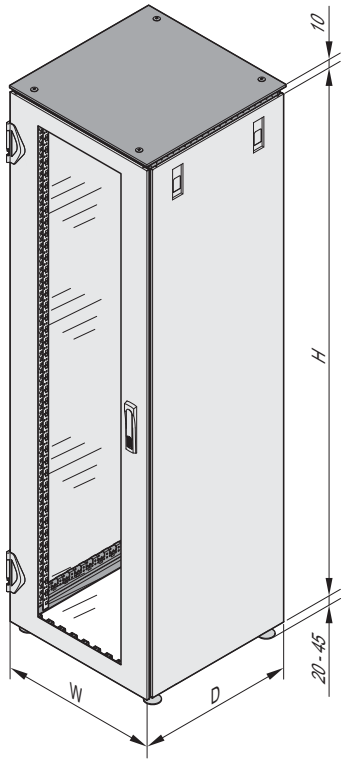

01004152

Note

- Lever handle can be added to the doors
- For other dimensions and versions see ServicePLUS configuration IP 20, from page 1.27
- Please order base plate separately, see page 1.15
- Please order base/plinth separately, see page 1.16
- For assembly of shelves and slide rails another pair of panel/slide mounts is necessary, see page 1.19

ServicePLUS see page 1.26

VARISTAR IP 55

01005006

01005014

- With glazed or steel front door
- Doors with 3-point locking and screw-fixed side panels
- Type of protection IP 55
- Static load-carrying capacity 400 kg (Slim-Line)

Delivery comprises (assembled)

Item	Qty	Description
1	1	Welded basic frame, Slim-Line, St profile, zinc-plated, powder-coated, RAL 7021, with all around rubber seals
2	4	Adjustable foot, assembled
3	1	Flat top cover, St, RAL 7021
4	1	Front door, St or glazed, RAL 7035, 180° hinge, 3-point locking, lever handle
5	1	Rear panel, screw fixed, St, RAL 7035
6	2	Side panel, screw fixed, St, RAL 7035
7	1	Base plate, multi-piece, with cover plate, St, RAL 7021, with gasket
8	2	19" panel/slide mount with EIA cut-outs, AlZn, assembled at front, depth-adjustable in 25 mm increments
9	1	GND/earthing kit, enclosed loose

Order Information

Height U	Height H mm	Width W mm	Depth D mm	Description	Part no.
42	2000	600	600	With glazed door	**10130-021**
42	2000	600	600	With steel door	**10130-022**
Castors load-carrying capacity 400 kg, PS/St, PU 4 pieces, 2 locking, 2 non locking					**23130-077**
Castors with integrated adjustable feet load-carrying capacity 400 kg, PU 4 pieces					**23130-078**
DIN profile half cylinder, common locking for lever handle (1 key fits all locks) incl. 2 keys					**25127-995**
Lifting eye for top cover PU 4 pieces					**23130-072**

Note

- For other dimensions and versions see ServicePLUS configuration IP 55, from page 1.39
- Please order base/plinth separately, see page 1.16
- For assembly of shelves and slide rails another pair of panel/slide mounts is necessary, see page 1.19

ServicePLUS see page 1.26

Cabinets – Varistar Electronics

Lever handle for single point locking

01005016

- For installation instead of key lock insert
- To open press push-button
- DIN profile half cylinder retrofittable

Delivery comprises

Item	Qty	Description
1	1	Lever handle for single point locking
2	1	Assembly kit

Order Information

Description	Part no.
Lever handle for single point locking	**23130-067**
DIN profile half cylinder, common locking for lever handle (1 key fits all locks) incl. 2 keys	**25127-995**

Note

- Other locks such as ASSA, KABA or RONIS available on request

Base plate, multi-piece

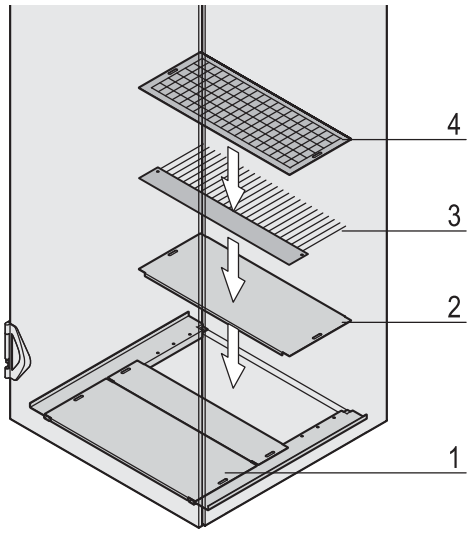

01004050

1: Base plate, multi-piece; 2: Cover plate; 3: Brush strip; 4: Filter kit

- The multi-piece base plate is open at the rear
- The opening may be completed
  - with a filter mat
  - with a brush strip for the cable entry
  - with a cover plate

Delivery comprises (kit)

Item	Qty	Description
1	1	Multi-piece base plate, St, 1.5 mm, RAL 7021
5	1	Assembly kit

Order Information

Width mm	Depth mm	Part no.
600	600	**23130-001**
600	800	**23130-002**
Item 2 Cover plate for base plate, multi-piece for 600 mm wide base plate, 200 mm deep, incl. assembly kit, 1 piece		**23130-076**
Item 3 Brush strip for base plate for 600 mm width base plate, 200 mm deep, incl. assembly kit, 1 piece		**23130-074**
Item 4 Filter mat white, class M1 in accordance with EN 799-G3, for 600 mm wide base plate, 200 mm deep, incl. assembly kit, 1 piece		**23130-075**

Note

- Is assembled from inside
- Please order cover plate, brush strip or filter mat separately

Cabinets – Varistar Electronics

Stationary base

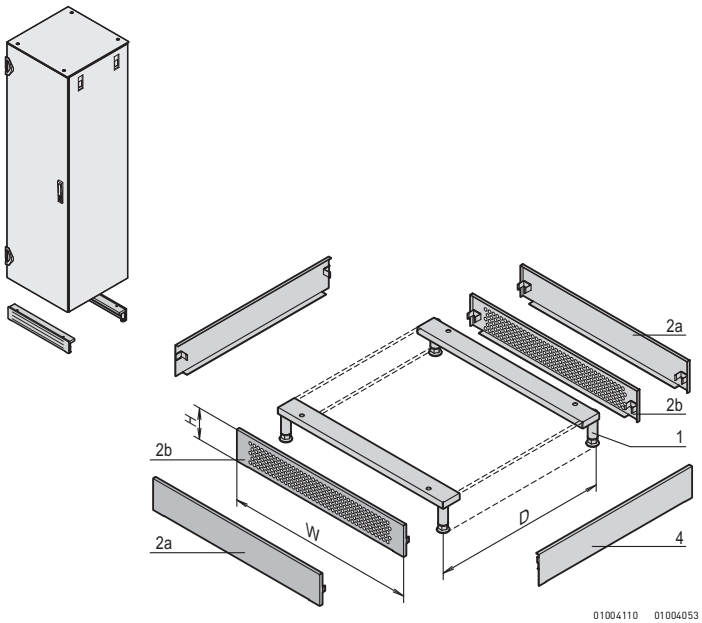

D = cabinet depth

- Static load-carrying capacity 1000 kg
- Removable covers allow cable entry from all sides
- Cannot be used in conjunction with castors
- Plinth height 100 mm, with feet adjustable from 112 to 132 mm
- Versions
  - Front/rear trim perforated
  - Front/rear trim solid

Delivery comprises (kit)

Item	Qty	Description
1	2	Support with feet, St, 3 mm
2a	2	Solid trim, St, 1.5 mm, RAL 7021
2b	2	Perforated trim, St, 1.5 mm, RAL 7021
3	1	Assembly kit

Order Information

For cabinet width W mm	Front/rear trim	Part no.
600	perforated	**23130-187**
600	plain	23130-387
Item 4 Side trim height 100 mm, depth 600 mm, PU 2 pieces		**23130-169**
Item 4 Side trim height 100 mm, depth 800 mm, PU 2 pieces		**23130-170**

Note

- Please order side trims (item 4) separately

Base/plinth, mobile

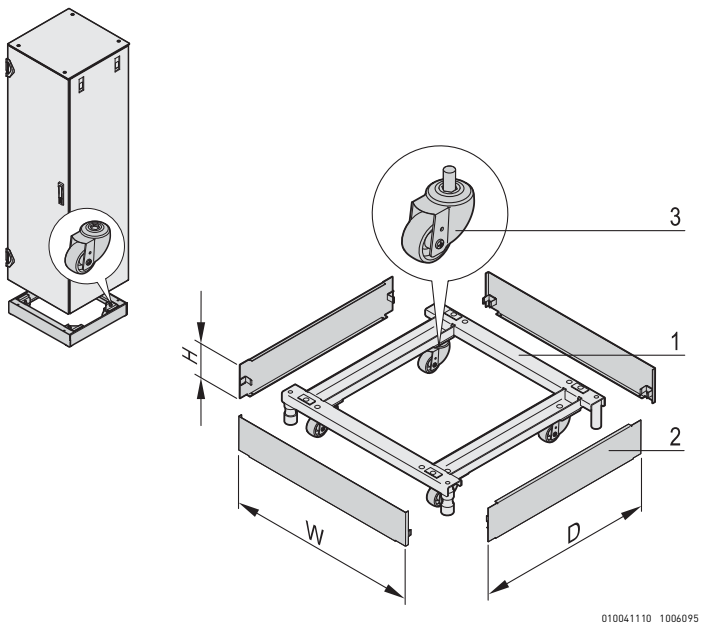

- Load-carrying capacity on castors 400 kg, on adjustable feet 1000 kg
- Plinth height H = 100 mm, with feet adjustable from 126 to 134 mm

Delivery comprises

Item	Qty	Description
1	1	Frame, St, 3 mm, RAL 7021, with adjustable feet
2	4	Trim, St, 1.5 mm, RAL 7021
3	4	Castor
4	1	Assembly kit

Order Information

For cabinet width mm	For cabinet depth mm	Part no.
600	600	**23130-208**
600	800	**23130-209**

Cabinets – Varistar Electronics

Mounting plate

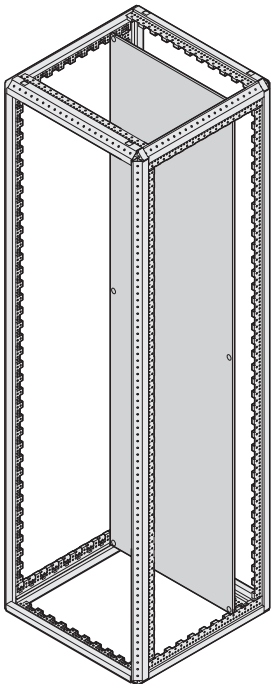

Full height

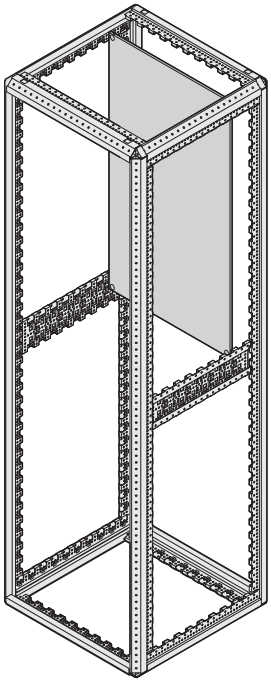

010080520 1008053

For partial-height mounting

- For mounting electrical components and sub-assemblies incl. cabling
- Mounting pitch 25 mm in depth and 50 mm in height for partial-height mounting
- Depth members are required for partial-height mounting
- Static load
  - 450 kg at full height, mounted to rear
  - 600 kg at full height, mounted to rear, with additional strengthening brackets

Delivery comprises

Item	Qty	Description
1	1	Mounting plate, St, 3 mm, zinc-plated
2	1	Assembly kit

Order Information

For cabinet height mm	Width mm	Part no.
1200 for partial-height mounting	600	**23130-413**
1800	600	**23130-405**
2000	600	**23130-407**
Strengthening bracket for mounting plate PU 2 pieces		**23130-418**
Depth member St, 2 mm, for cabinet depth 600 mm, 2 pieces		**23130-081**
Depth member St, 2 mm, for cabinet depth 800 mm, 2 pieces		**23130-082**

19" swing frame

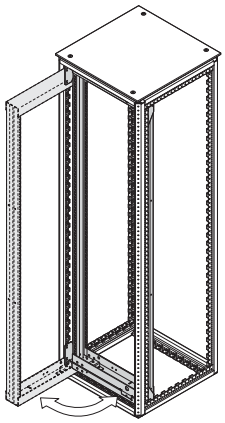

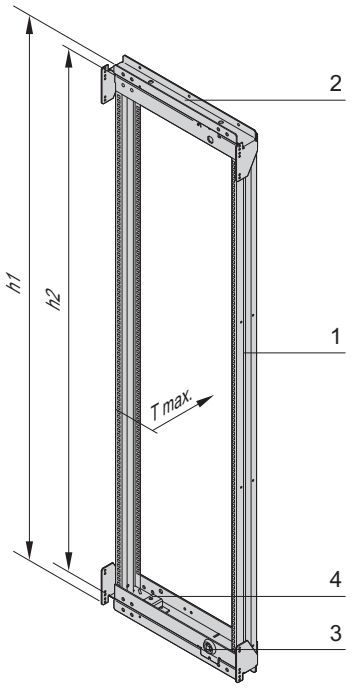

01005055 01005059

- Can accommodate 19" chassis and 19" subracks
- For full height or partial-height mounting
- Pivot point can be selected right or left
- Load-carrying capacity 150 kg

Delivery includes (kit)

Item	Qty	Description
1	1	Swing frame, St, 2 mm, RAL 7021
2	2	Support bar, St, 3 mm, RAL 7021
3	2	Square lock, 8 mm, incl. 2 keys
4	2	120° hinge
5	1	Assembly kit

Order Information

For cabinet height mm	Height h1 U	Height h2 U	Part no.
900 for partial-height mounting	16	12	21130-740
1200 for partial-height mounting	24	21	21130-741
1400 for partial-height mounting	29	25	21130-742
1600 for partial-height mounting	33	30	21130-743
1800	38	34	21130-744
2000	42	39	21130-745
2200	47	43	21130-746
Accessories			
Swing frame stop max. swing angle 120°, St, zinc-plated, 1 piece			23130-158
Security lock to replace the square lock, PU 1 lock incl. 2 keys			**60113-267**
Spare key for security lock, 1 piece			**60220-003**

Swing frame stop

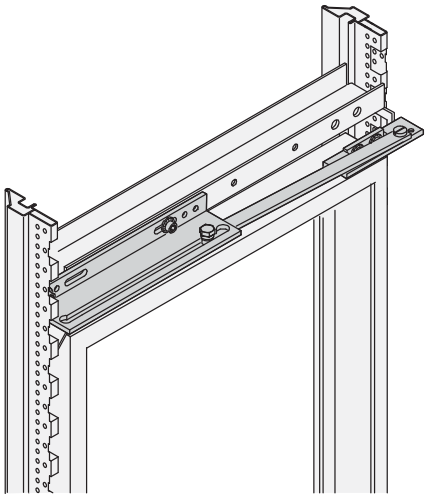

01005061

Security lock

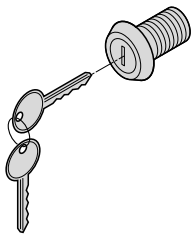

41001517

Note

- 19" swing frames can be assembled:
  - Directly on the cabinet frame
  - In 50 mm increments by aid of depth members (depth-adjustable)
- For partial-height mounting, depth members are necessary, see page 1.24

Cabinets – Varistar Electronics

19" panel/slide mount with universal pitch (EIA)

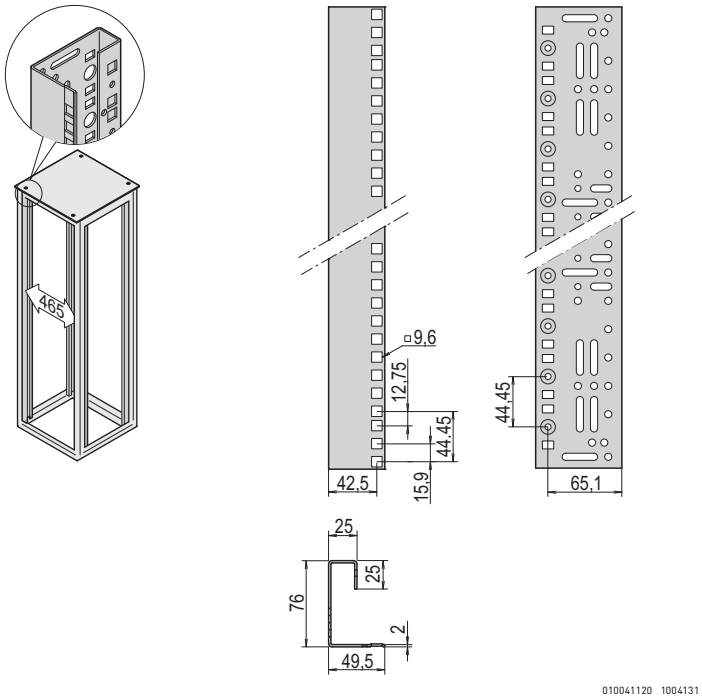

010041120 1004131

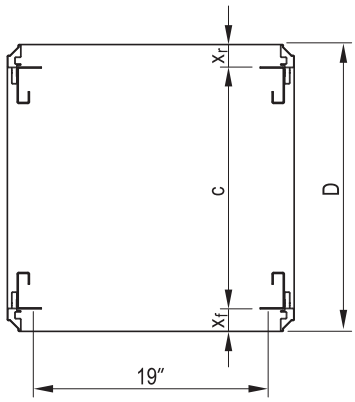

01005088

Standard assembly dimension $x_r = x_f = 50$ mm

- Assembly in 600 mm wide cabinets directly on the frame
- Depth-adjustable in 25 mm increments
- In accordance with IEC 60297-1 (DIN 41 494, part 1)

Delivery comprises

Item	Qty	Description
1	2	19" panel/slide mount, St, 1.75 mm, finish AlZn, RAL 7035 or RAL 7021
2	1	Assembly kit, incl. GND/earthing

Order Information

For cabinet height	Usable height	Length	AlZn	RAL 7035	RAL 7021
mm	U	mm	Part no.	Part no.	Part no.
Partial-height mounting	8	395	**23130-037**	**23130-027**	**23130-017**
Partial-height mounting	12	545	**23130-038**	**23130-028**	**23130-018**
Partial-height mounting	16	745	**23130-039**	**23130-029**	**23130-019**
Partial-height mounting	20	895	**23130-040**	**23130-030**	**23130-020**
Partial-height mounting	24	1095	**23130-031**	**23130-021**	**23130-011**
Partial-height mounting	29	1295	**23130-032**	**23130-022**	**23130-012**
Partial-height mounting	33	1495	**23130-033**	**23130-023**	**23130-013**
1800	38	1695	**23130-034**	**23130-024**	**23130-014**
2000	42	1895	**23130-035**	**23130-025**	**23130-015**
Dimensioning strip for 19" panel mounts, paper, white, serial numbered from 1 ... 47 U, PU 4 pieces					**25127-997**

Note

- For 19" partial-height mounting depth members are necessary
- Metric panel/slide mounts available on request

19" assembly kit, M6

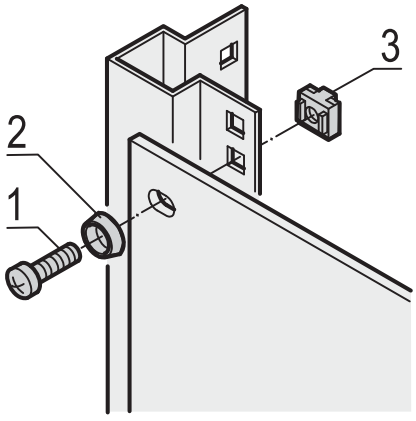

sc128

- For front panels, distribution fields and other components

Delivery comprises

Item	Description
1	Panhead screw, M6 x 16, St, zinc-plated
2	Plastic washer, black
3	Cage nut, M6, St, zinc-plated

Order Information

Description	Qty/PU	Part no.
19" assembly kit (screw, washer, nut)	50	**21101-809**
19" assembly kit (screw, washer, nut)	100	**21101-810**

Slide rails

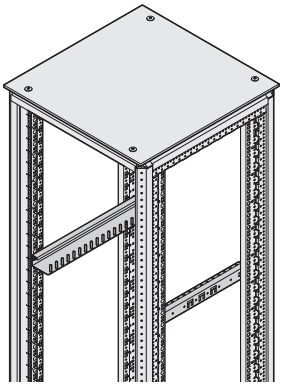

01004056

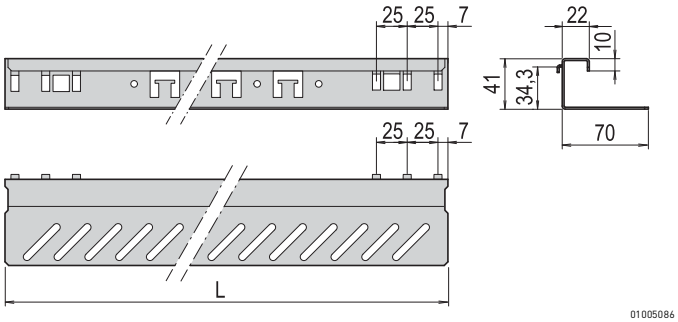

01005086

Static load-carrying capacity 25 kg

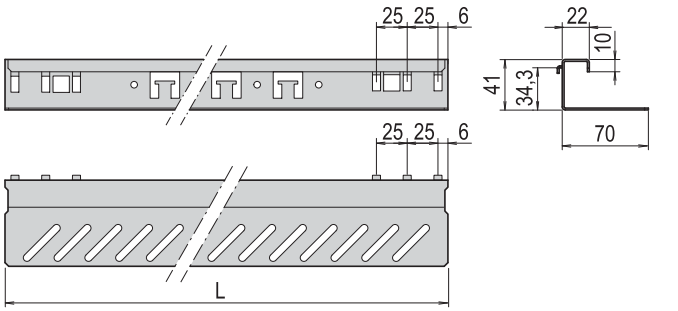

01004058

Static load-carrying capacity 100 kg

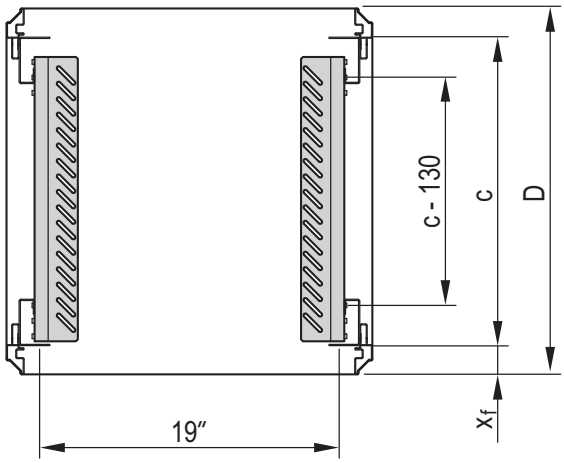

01004130

c = pitch of the 19" panel/slide mounts
x_f = standard dimension
D = cabinet depth

- For assembly on 19" panel/slide mounts
- Assembly in 1 U increments (snap-in, bolt-on)
- Wide support surface (48 mm)
- 2 versions
  - Static load-carrying capacity 25 kg per pair
  - Static load-carrying capacity 100 kg per pair

Delivery comprises

Item	Qty	Description
1	see Order information	Slide rail, AlZn, 1.5 mm (static load-carrying capacity 25 kg), or 2.5 mm (static load-carrying capacity 100 kg), zinc-plated
2	1	Assembly kit incl. GND/earthing

Order Information

Static load carrying capacity 25 kg

For cabinet depth D	x_f	c	Length L	Qty/PU	Part no.
mm	mm	mm	mm		
600	50	500	456	2	**23130-096**
600	50	500	456	10	**23130-101**
800	50	700	656	2	**23130-097**
800	50	700	656	10	**23130-102**

Order Information

Static load carrying capacity 100 kg

For cabinet depth D	x_f	c	Length L	Qty/PU	Part no.
mm	mm	mm	mm		
600	50	500	458	2	**23130-118**
600	50	500	458	10	**23130-123**
800	50	700	658	2	**23130-119**
800	50	700	658	10	**23130-124**

Cabinets – Varistar Electronics

19" fixed shelf, 75 kg

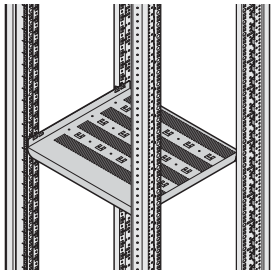

01004066

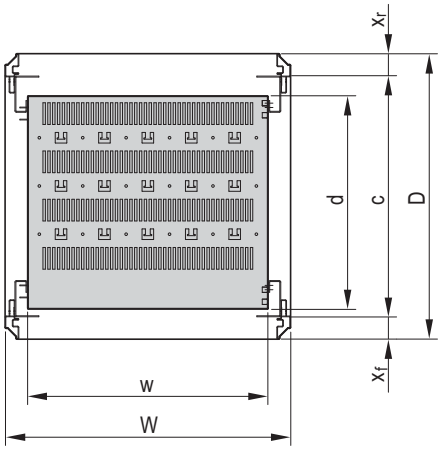

01004067

c = max. pitch of the 19" slide mounts
x_f, x_r = standard assembly dimension

- Static load-carrying capacity 75 kg (150 kg with strengthening rail)
- Mounting height 1 U, for mounting on four panel/slide mounts
- With hammer head perforation to fix cable ties

Delivery comprises

Item	Qty	Description
1	1	Perforated shelf, St, 1.5 mm (colour see Order Information)
2	1	Assembly kit incl. GND/earthing

Order Information

For cabinet depth	Usable surface w x d	x_f	c	RAL 7035	RAL 7021
mm	mm	mm	mm	Part no.	Part no.
600	495 x 442	50	500	**22130-303**	**21130-303**
800	495 x 642	50	700	**22130-305**	**21130-305**
Strengthening rail for stationary 19" shelf PU 1 piece					**23130-310**

Note

- Cable ducting with cable ties, see page 1.25
- Other sizes, see ServicePLUS, page 1.49

19'' telescopic shelf, 30 kg

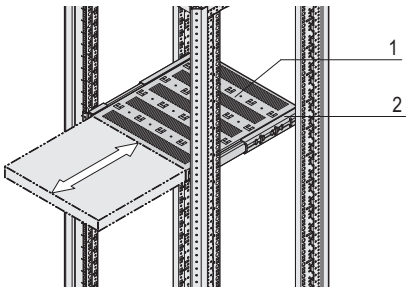

01004068

- Static load-carrying capacity at full extension 30 kg
- Mounting height 1 U, for mounting on four 19" panel/slide mounts
- Incl. telescopic slides
- Hammer head perforation to fix cable ties
- 2 versions
  - Full depth
  - Depth shortened by 100 mm for rear cable ducting

Delivery comprises

Item	Qty	Description
1	1	Perforated shelf, St, 1.5 mm (colour see Order Information)
2	2	Telescopic slide
3	1	Assembly kit

Order Information

Full depth

For cabinet depth	Usable surface w x d	x_f	c	RAL 7035	RAL 7021
mm	mm	mm	mm	Part no.	Part no.
600	417 x 482	50	500	**22130-343**	**21130-343**
800	417 x 682	50	700	**22130-345**	**21130-345**
GND/earthing for telescopic 19" shelf PU 1 kit, for VARISTAR					**23130-140**

Note

- Cable ducting with cable ties, see page 1.25

Full depth

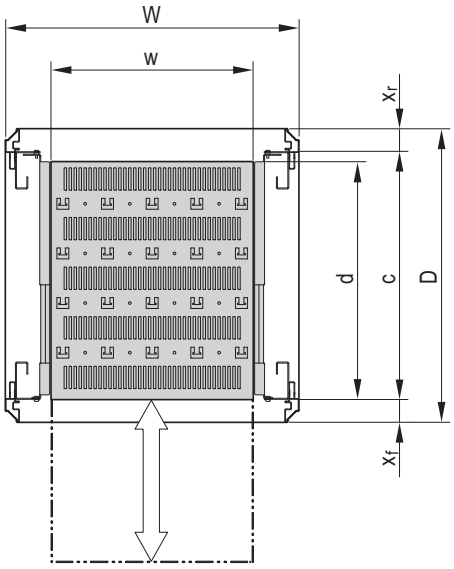

01004069

Shortened depth

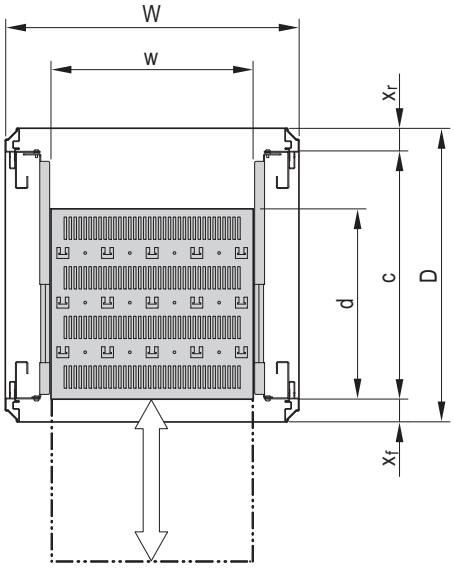

01004070

c = max. pitch of the 19" panel/slide mounts
x_f, x_r = standard assembly dimension

Order Information

Shortened by 100 mm

For cabinet depth	Usable surface w x d	x_f	c	RAL 7035	RAL 7021
mm	mm	mm	mm	Part no.	Part no.
600	417 x 382	50	500	**22130-342**	**21130-342**
800	417 x 582	50	700	**22130-344**	**21130-344**
GND/earthing for telescopic 19" shelf PU 1 kit, for VARISTAR					**23130-140**

Note

- Cable ducting with cable ties, see page 1.25

Cabinets – Varistar Electronics

19" telescopic shelf, 70 kg

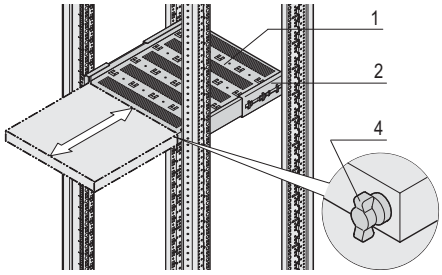

01004071

- Static load-carrying capacity at full extension 70 kg
- Mounting height 2 U, for mounting on four 19" panel/slide mounts
- Incl. telescopic slides
- Locking with T-bar lock possible
- Hammer head perforation to fix cable ties
- 2 versions
  - Full depth
  - Depth shortened by 100 mm for rear cable ducting

Full depth

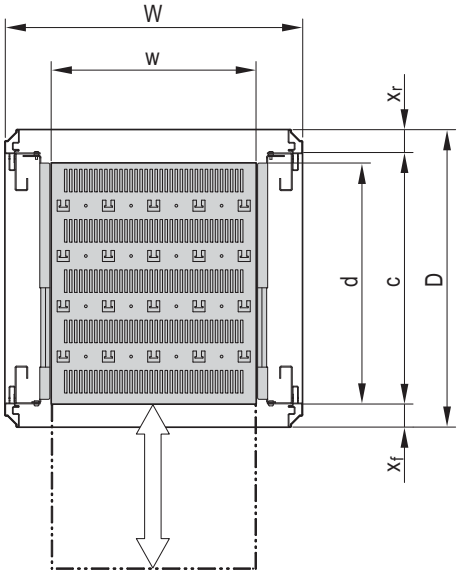

01004069

c = max. pitch for 19" panel/slidemounts

Shortened depth

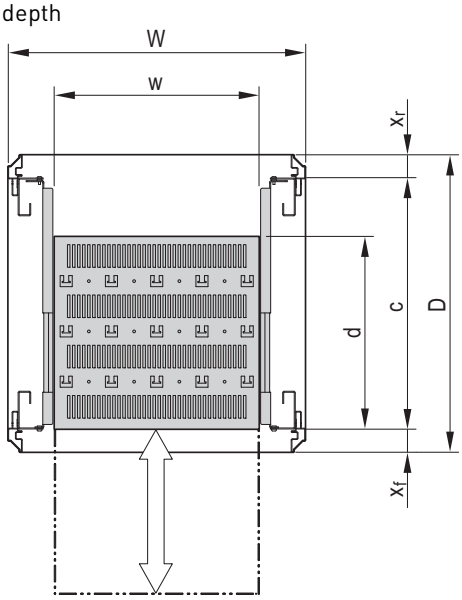

01004070

c = max. pitch of the 19" slide mounts
x_f, x_r = standard assembly dimension

Delivery comprises

Item	Qty	Description
1	1	Perforated shelf, St, 1.5 mm (colour see Order Information)
2	2	Telescopic slide
3	1	Assembly kit

Order Information

Full depth

For cabinet depth	Usable surface w x d	x_f	c	RAL 7035	RAL 7021
mm	mm	mm	mm	Part no.	Part no.
600	405 x 482	50	500	**22130-353**	**21130-353**
800	405 x 682	50	700	**22130-355**	**21130-355**
Item 4 T-bar lock for 1 telescopic shelf (can be mounted right or left), 1 piece					**23130-092**
GND/earthing for telescopic 19" shelf PU 1 kit, for VARISTAR					**23130-140**

Note

- Please order T-bar lock (item 4) separately
- Cable ducting with cable ties, see page 1.25

Order Information

Shortened by 100 mm

For cabinet depth	Usable surface w x d	x_f	c	RAL 7035	RAL 7021
mm	mm	mm	mm	Part no.	Part no.
600	405 x 382	50	500	**22130-352**	**21130-352**
800	405 x 582	50	700	**22130-354**	**21130-354**
Item 4 T-bar lock for 1 telescopic shelf (can be mounted right or left), 1 piece					**23130-092**
GND/earthing for telescopic 19" shelf PU 1 kit, for VARISTAR					**23130-140**

Note

- Please order T-bar lock (item 4) separately
- Cable ducting with cable ties, see page 1.25

Depth member

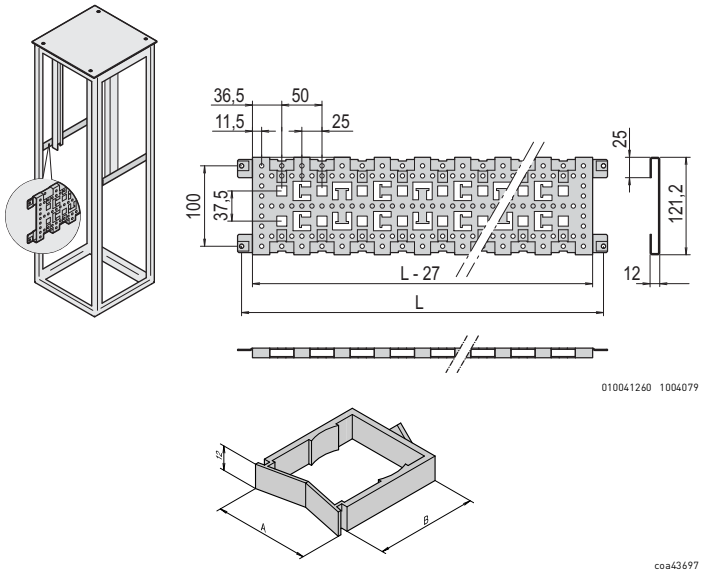

Cable eye

- For fitting shortened 19" panel/slide mounts and mounting plates
- Cable ducting by means of cable ties and cable eye

Delivery comprises

Item	Qty	Description
1	2	Depth member, St, 1.5 mm, finish AlZn
2	1	Assembly kit incl. GND/earthing

Order Information

Description	For cabinet depth mm	Part no.
Depth member	600	**23130-081**
Depth member	800	**23130-082**
Cable eye A = 38 mm, B = 25 mm, PU 25 pieces		**21101-151**
Cable eye A = 47 mm, B = 50 mm, PU 25 pieces		**21101-150**

- Cable ducting with cable ties, see page 1.25

C-profile for the cabinet depth

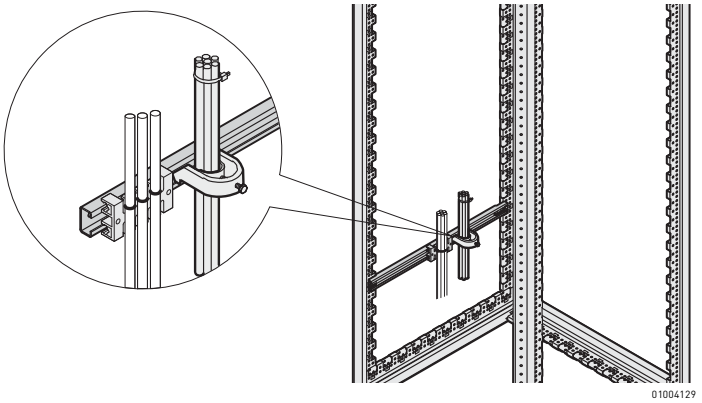

Cable retention rail and cable shell mounted on C-profile

- For cable ducting in lateral area of cabinet
- For cable shells and cable retention rails

Delivery comprises

Item	Qty	Description
1	2	C-profile, St, 1.5 mm, AlZn
2	1	Assembly kit incl. GND/earthing

Order Information

For cabinet depth mm	Length L mm	Part no.
600	460	**23130-086**
800	660	**23130-087**
Accessories		
Cable retention rail for C-rail Width 75 mm, length 39.5 mm, PU 5 piece		**60118-472**
Cable shell for cable bundle 18 ... 22 mm, PU 10 pieces		**20118-775**
Cable shell for cable bundle 22 ... 26 mm, PU 10 pieces		**20118-776**
Cable shell for cable bundle 26 ... 30 mm, PU 10 pieces		**20118-777**
Cable shell for cable bundle 30 ... 34 mm, PU 10 pieces		**20114-728**
Cable shell for cable bundle 34 ... 38 mm, PU 10 pieces		**20114-729**
Cable shell for cable bundle 38 ... 42 mm, PU 10 pieces		**20114-730**
Cable shell for cable bundle 42 ... 46 mm, PU 10 pieces		**20114-731**
Cable shell for cable bundle 46 ... 50 mm, PU 10 pieces		20118-778
Slide nut for C-profile, PU 10 piece		**21120-140**

Note

- Cable ties and Velcro for cable retention rail see page 1.25

Slide nut

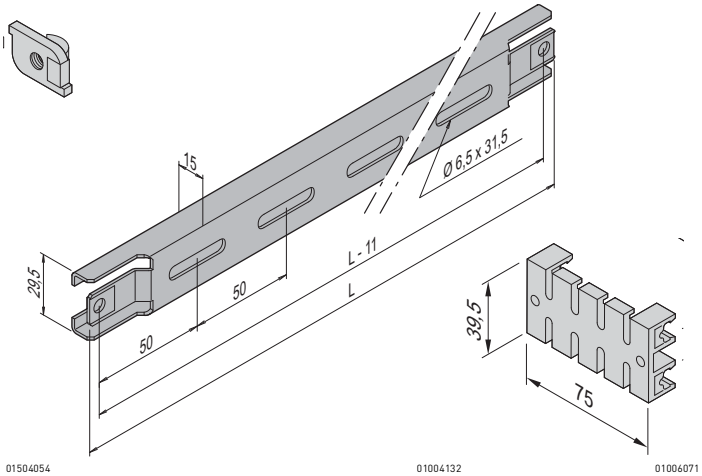

C-profile Cable retention rail

Cabinets – Varistar Electronics

C-profile for cabinet width

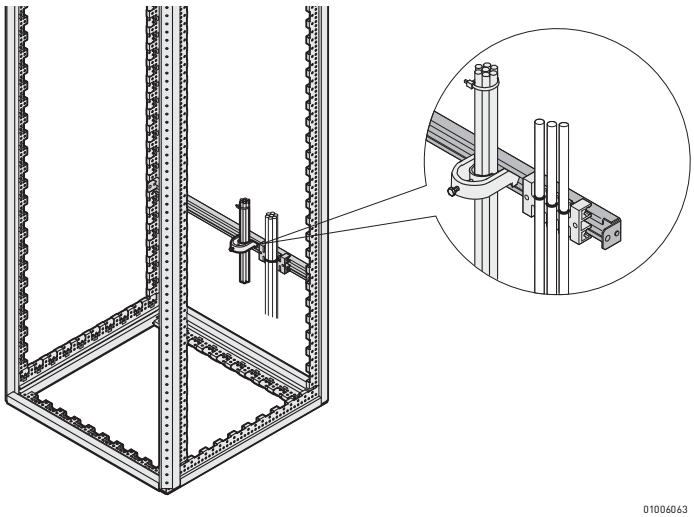

C-profile

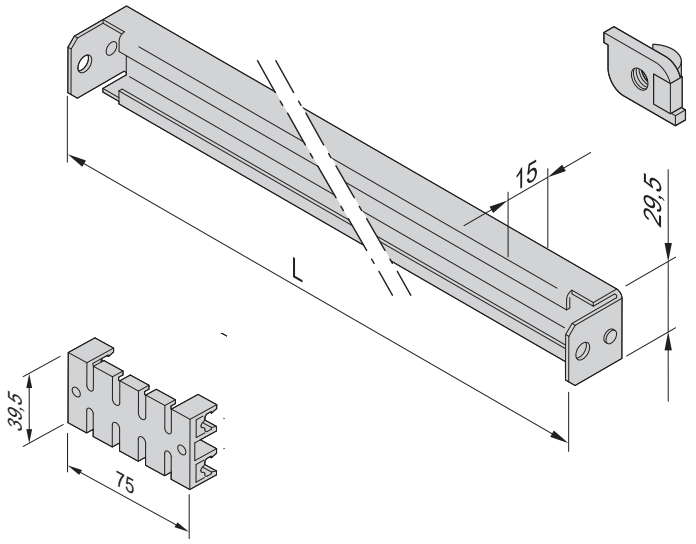

Slide nut

Cable retention rail

- For cable ducting in rear or front area of cabinet
- For cable shells and cable retention rails

Delivery comprises

Item	Qty	Description
1	2	C-profile, St, 1.5 mm, finish AlZn
2	1	Assembly kit incl. GND/earthing

Order Information

For cabinet width mm	Length mm	Part no.
600	550	**23130-333**
800	750	**23130-334**
Accessories		
Cable retention rail for C-rail Width 75 mm, length 39.5 mm, PU 5 pieces		**60118-472**
Cable shell for cable bundle 18 ... 22 mm, PU 10 pieces		**20118-775**
Cable shell for cable bundle 22 ... 26 mm, PU 10 pieces		**20118-776**
Cable shell for cable bundle 26 ... 30 mm, PU 10 pieces		**20118-777**
Cable shell for cable bundle 30 ... 34 mm, PU 10 pieces		**20114-728**
Cable shell for cable bundle 34 ... 38 mm, PU 10 pieces		**20114-729**
Cable shell for cable bundle 38 ... 42 mm, PU 10 pieces		**20114-730**
Cable shell for cable bundle 42 ... 46 mm, PU 10 pieces		**20114-731**
Cable shell for cable bundle 46 ... 50 mm, PU 10 pieces		20118-778
Slide nut for C-profile, PU 10 pieces		**21120-140**

Note

- Cable ties and Velcro for cable retention rail see page 1.25

Cable ties, Velcro

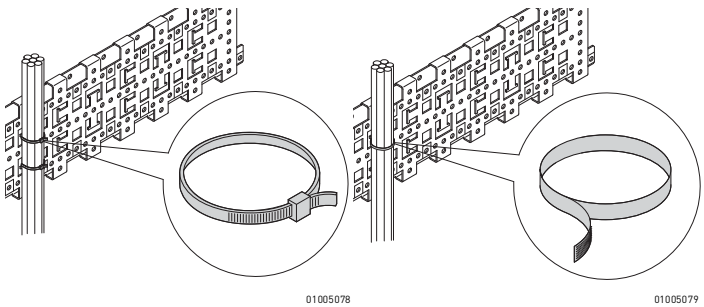

Cable tie

Velcro

- Fixing materials kit for cable ducting

Order Information

Description	Part no.
Cable tie, Plastic, 92 mm x 2.5 mm, PU 25 pieces	**20118-351**
Cable tie, Plastic, 186 mm x 5 mm, PU 25 pieces	**20118-352**
Cable tie, Plastic, 360 mm x 5 mm, PU 25 pieces	**20118-353**
Velcro strip, PE/PA, black, length 300 mm, PU 10 pieces	**20118-624**

Cabinets – Varistar Elektronics ServicePLUS

configuration

Simple. Fast. To the ideal product.

Components can be varied and combined freely

- Configuration tables from page 1.27
- Online configuration: www.schroff.co.uk/configuration

assembly

Assembled by professionals. Double benefit!

Fitting of all mechanical, electrical and electronic components by our specialists

- Without extra cost
- Ready for despatch within 10 working days

modification

Small changes. Large impact.

Custom drilling, cut-outs and special colours for off-the-shelf products

- Download CAD data and send back with modifications
- Ready for despatch within 10 working days

solution

Simple. Fast. From one source.

Integration and custom developments

- Climate control, complete assembly, cabling (power supply), function test
- Special sizes, customised solutions

academy

Knowledge. Sharing. Partnerships.

Knowledge transfer and partnership

- Seminars, white papers, CAD drawings, test reports, user reports
- Further information: www.varistar.co.uk

lifecycle

We are with you. For the entire product life.

Flexible support throughout the product lifecycle

- Delivery to point of use, installation service, exchange service, replacement parts

Cabinets – Varistar Elektronics ServicePLUS

VARISTAR IP 20 ServicePLUS: configuration and assembly

- Dimensions:
  - Height: 29 ... 47 U (1400 ... 2200 mm)
  - Width: 600 and 800 mm
  - Depth: 300, 600 and 800 mm
- 2 colour combinations:
  - Frame and covers in black grey (RAL 7021)
  - Frame, top cover and base in black grey (RAL 7021); Side panel, door and rear panel in light grey (RAL 7035)
- Build your cabinet out of individual components (please suffix each part number with /05)
- Once you have selected the desired cabinet dimensions, the row number (first column of the configuration tables) will guide you through all subsequent configuration pages that apply to these dimensions (see example below)
- The cabinet is assembled by us and ready for despatch within 10 working days

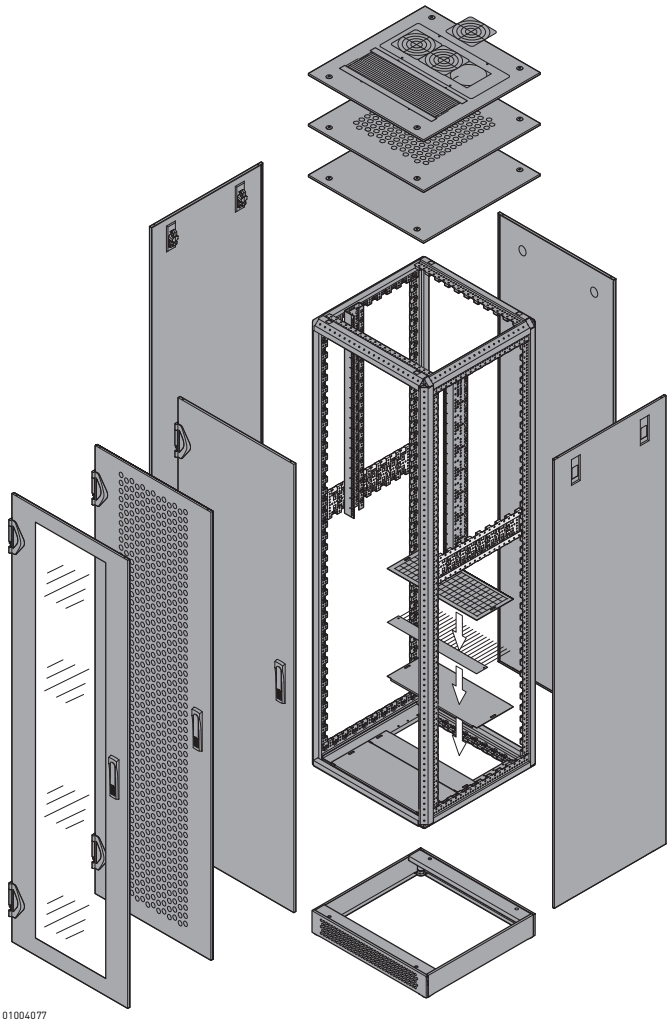

Example configuration (here: row 10)

Qty	Description	Order no.
1	Frame Slim-Line, height 2000 mm, width 600 mm, depth 800 mm, 1 piece	20130-019/05
1	Side panel with quick-release fastener, RAL 7021, PU 2 pieces	21130-051/05
2	Safety lock for side panel, PU 4 pieces	23130-132/05
1	Rear panel, screw-fixed, RAL 7021, 1 piece	21130-069/05
1	Glazed door with single point locking, RAL 7021, IP 20, 1 piece	21130-129/05
1	Adjustable feet, PU 4 pieces	23130-079/05
..	.....	.....

	Page
Frames, side-by-side mounting kits, adjustable feet, castors	1.28
Side panels, rear panels	1.29
Decorative frames, glazed doors	1.30
Steel doors	1.31
Double doors	1.32
Flat top covers, lifting eyes	1.33
Flat top cover assemblies with cut-out zones	1.34
Fan top covers	1.35
Bases/plinths	1.36
Connecting plates for short doors/rear panels	1.37
Interior configuration for IP 20 and IP 55	
19" panel/slide mounts	1.44
ETSI panel/slide mounts	1.45
Swing frames	1.46
Mounting plate, stationary shelves, 75 kg	1.47
Telescopic shelves, 70 kg	1.48
19" shelves 1 U, fixed 75 kg, telescopic 30 kg	1.49
19" telescopic shelf, 2 U, 70 kg	1.50
Slide rails, depth members	1.51
Cable ductings	1.52
Cable ties, Velcro	1.53

Cabinets – Varistar Elektronics ServicePLUS

VARISTAR IP 20 Frames, side-by-side mounting kits, adjustable feet, castors

Order Information

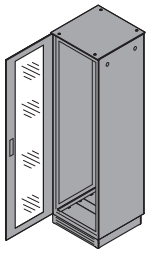

Completely in RAL 7021 (black grey)

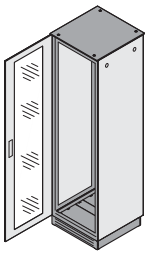

Colour combination RAL 7035 (light grey)/ RAL 7021 (black grey)

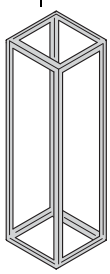

01004078

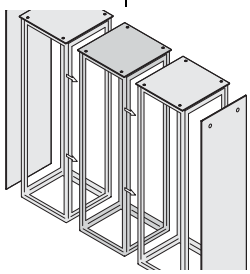

01004117

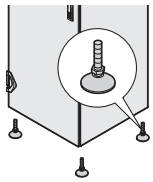

01004081

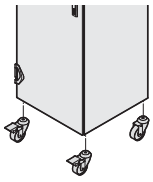

01004082

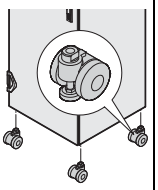

01004156

	Cabinet dimensions				Frame		Side-by-side mounting kit IP 20	Side-by-side mounting kit IP 55 (with gasketing)	Adjustable feet	Castors	
					Slim-Line 400 kg	Heavy-Duty 800 kg				With 2 jacking feet	With adjustable feet
					static load-carrying capacity: 400 kg, St, 1.5 mm, zinc-plated, with central GND/ earthing point; please order adjustable feet or castors separately	static load-carrying capacity: 800 kg, St, 1.5 mm, zinc-plated, with central GND/ earthing point; please order adjustable feet or castors separately	side-by-side mounting bracket (4 pieces), St; RAL 7021, not in combination with decorative frame	side-by-side mounting bracket (4 pieces), St, RAL 7021, incl. gasketing to cover the gap between two racks; not in combination with decorative frame	for the frame, static load-carrying capacity: 1000 kg, cannot be used with base/plinth	for the frame, static load-carrying capacity: 400 kg, cannot be used with base/plinth	for the frame, static load-carrying capacity: 400 kg, cannot be used with base/plinth
	Height		Width	Depth	1 piece	1 piece	PU 1 kit	PU 1 kit	PU 4 pieces	PU 4 pieces	PU 4 pieces
No.	U	mm	mm	mm	assembled	assembled	supplied loose	supplied loose	assembled		
	Completely in RAL 7021				RAL 7021	RAL 7021	RAL 7021				
1	29	1400	600	600	20130-005	20130-055	23130-061	23130-062	23130-079	23130-077	23130-078
2	29	1400	600	800	20130-006	20130-056					
3	33	1600	600	600	20130-009	20130-059	23130-061	23130-062	23130-079	23130-077	23130-078
4	33	1600	600	800	20130-010	20130-060					
5	38	1800	600	600	20130-013	20130-063	23130-061	23130-062	23130-079	23130-077	23130-078
6	38	1800	600	800	20130-014	20130-064					
7	38	1800	800	600	20130-015	20130-065	23130-061	23130-062	23130-079	23130-077	23130-078
8	42	2000	600	300	20130-017	–	23130-061	23130-062	23130-079	23130-077	23130-078
9	42	2000	600	600	20130-018	20130-068	23130-061	23130-062	23130-079	23130-077	23130-078
10	42	2000	600	800	20130-019	20130-069					
11	42	2000	800	600	20130-022	20130-072	23130-061	23130-062	23130-079	23130-077	23130-078
12	42	2000	800	800	20130-023	20130-073					
13	47	2200	600	300	20130-026	–	23130-061	23130-062	23130-079	23130-077	23130-078
14	47	2200	600	600	20130-027	20130-077	23130-061	23130-062	23130-079	23130-077	23130-078
15	47	2200	600	800	20130-028	20130-078					
16	47	2200	800	800	20130-032	20130-082	23130-061	23130-062	23130-079	23130-077	23130-078
	Colour combinations				RAL 7021	RAL 7021	RAL 7021				
17	29	1400	600	600	20130-005	20130-055	23130-061	23130-062	23130-079	23130-077	23130-078
18	29	1400	600	800	20130-006	20130-056					
19	33	1600	600	600	20130-009	20130-059	23130-061	23130-062	23130-079	23130-077	23130-078
20	33	1600	600	800	20130-010	20130-060					
21	38	1800	600	600	20130-013	20130-063	23130-061	23130-062	23130-079	23130-077	23130-078
22	38	1800	600	800	20130-014	20130-064					
23	38	1800	800	600	20130-015	20130-065	23130-061	23130-062	23130-079	23130-077	23130-078
24	42	2000	600	300	20130-017	–	23130-061	23130-062	23130-079	23130-077	23130-078
25	42	2000	600	600	20130-018	20130-068	23130-061	23130-062	23130-079	23130-077	23130-078
26	42	2000	600	800	20130-019	20130-069					
27	42	2000	800	600	20130-022	20130-072	23130-061	23130-062	23130-079	23130-077	23130-078
28	42	2000	800	800	20130-023	20130-073					
29	47	2200	600	300	20130-026	–	23130-061	23130-062	23130-079	23130-077	23130-078
30	47	2200	600	600	20130-027	20130-077	23130-061	23130-062	23130-079	23130-077	23130-078
31	47	2200	600	800	20130-028	20130-078					
32	47	2200	800	800	20130-032	20130-082	23130-061	23130-062	23130-079	23130-077	23130-078

Other dimensions and configurations online (with basket) at www.schroff.biz/conf

Cabinets – Varistar Elektronics ServicePLUS

VARISTAR IP 20 Side panels, rear panels

Order Information

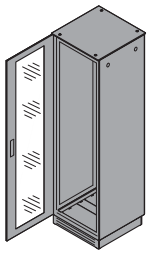

Completely in RAL 7021 (black grey)

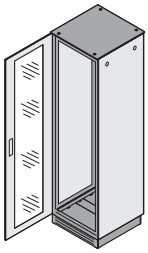

Colour combination RAL 7035 (light grey)/ RAL 7021 (black grey)

	Cabinet dimensions				Side panel		Screw-fixed side panel	Rear panel		Screw-fixed rear panel
					With quick release fastener	Lock		With quick release fastener	Lock	
					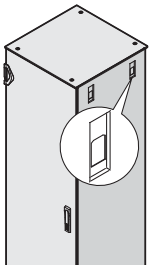 01004084	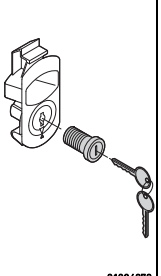 01004072	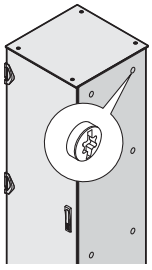 01004083	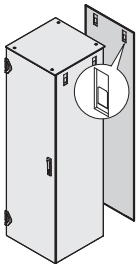 01004087	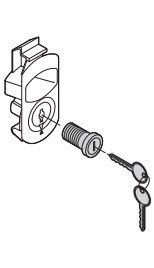 01004072	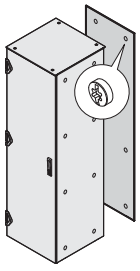 01004085
					St, 1 mm, incl. GND/earthing, please order lock separately	for quick-release fasteners of one side panel; 4 locks sufficient for 2 side panels	St, 1 mm, incl. GND/earthing	St, 1 mm, incl. GND/earthing, please order lock separately	for quick-release fasteners of rear panel	St, 1 mm, incl. GND/earthing
	Height		Width	Depth						
No.	U	mm	mm	mm	PU 2 pieces assembled	PU 4 pieces assembled	PU 2 pieces assembled	1 piece assembled	PU 2 pieces assembled	1 piece assembled
Completely in RAL 7021					RAL 7021		RAL 7021	RAL 7021		RAL 7021
1	29	1400	600	600	21130-043	23130-132	21130-003	21130-093	23130-133	21130-063
2	29	1400	600	800	21130-044		21130-004			
3	33	1600	600	600	21130-045	23130-132	21130-005	21130-095	23130-133	21130-065
4	33	1600	600	800	21130-046		21130-006			
5	38	1800	600	600	21130-047	23130-132	21130-007	21130-097	23130-133	21130-067
6	38	1800	600	800	21130-048		21130-008			
7	38	1800	800	600	21130-047	23130-132	21130-007	21130-098	23130-133	21130-068
8	42	2000	600	300	21130-049	23130-132	21130-009	21130-099	23130-133	21130-069
9	42	2000	600	600	21130-050	23130-132	21130-010	21130-099	23130-133	21130-069
10	42	2000	600	800	21130-051		21130-011			
11	42	2000	800	600	21130-050	23130-132	21130-010	21130-100	23130-133	21130-070
12	42	2000	800	800	21130-051		21130-011			
13	47	2200	600	300	21130-054	23130-132	21130-014	21130-101	23130-133	21130-071
14	47	2200	600	600	21130-055	23130-132	21130-015	21130-101	23130-133	21130-071
15	47	2200	600	800	21130-056		21130-016			
16	47	2200	800	800	21130-056	23130-132	21130-016	21130-102	23130-133	21130-072
Colour combinations					RAL 7035		RAL 7035	RAL 7035		RAL 7035
17	29	1400	600	600	22130-043	23130-132	22130-003	22130-093	23130-133	22130-063
18	29	1400	600	800	22130-044		22130-004			
19	33	1600	600	600	22130-045	23130-132	22130-005	22130-095	23130-133	22130-065
20	33	1600	600	800	22130-046		22130-006			
21	38	1800	600	600	22130-047	23130-132	22130-007	22130-097	23130-133	22130-067
22	38	1800	600	800	22130-048		22130-008			
23	38	1800	800	600	22130-047	23130-132	22130-007	22130-098	23130-133	22130-068
24	42	2000	600	300	22130-049	23130-132	22130-009	22130-099	23130-133	22130-069
25	42	2000	600	600	22130-050	23130-132	22130-010	22130-099	23130-133	22130-069
26	42	2000	600	800	22130-051		22130-011			
27	42	2000	800	600	22130-050	23130-132	22130-010	22130-100	23130-133	22130-070
28	42	2000	800	800	22130-051		22130-011			
29	47	2200	600	300	22130-054	23130-132	22130-014	22130-101	23130-133	22130-071
30	47	2200	600	600	22130-055	23130-132	22130-015	22130-101	23130-133	22130-071
31	47	2200	600	800	22130-056		22130-016			
32	47	2200	800	800	22130-056	23130-132	22130-016	22130-102	23130-133	22130-072

VARISTAR IP 20 Decorative frames, glazed doors

Order Information

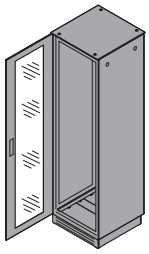

Completely in RAL 7021 (black grey)

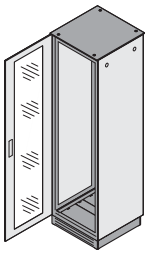

Colour combination RAL 7035 (light grey)/ RAL 7021 (black grey)

					Deco frame		Glazed door		Glazed door	DIN profile half cylinder
					Deco frame	Adapter bracket	Single point locking	Lever handle	3-point locking	
					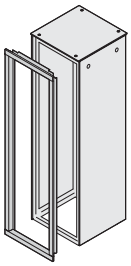 01004086	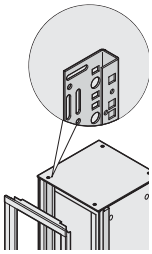 01004160	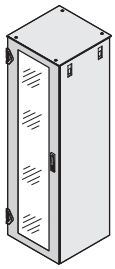 01004088	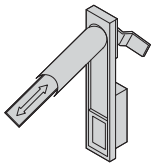 01004147	01004091	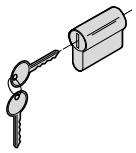 01004148
					Al, 19" plane integrated, front open, incl. GND/earthing, no door can be fitted	St, 2 mm, for deco frame, for assembly of slide rails and shelves	St, 1.5 mm, Sekurit glass 6 mm, opening angle 180°, lock cover, incl. GND/ earthing	with push button for doors with single point locking	St, 1.5 mm, Sekurit glass, 6 mm, opening angle 180°, lever handle with push button, incl. GND/ earthing	for lever handle, common locking
	Cabinet dimensions									
No.	Height U	mm	Width mm	Depth mm	1 piece assembled	PU 1 pair assembled	1 piece assembled	1 piece assembled	1 piece assembled	1 piece assembled
	Completely in RAL 7021				RAL 7021	RAL 7021	RAL 7021		RAL 7021	
1	29	1400	600	600	21130-232	23130-221	21130-123	**23130-067**	21130-183	**25127-995**
2	29	1400	600	800						
3	33	1600	600	600	21130-233	23130-222	21130-125	**23130-067**	21130-185	**25127-995**
4	33	1600	600	800						
5	38	1800	600	600	21130-234	23130-223	21130-127	**23130-067**	21130-187	**25127-995**
6	38	1800	600	800						
7	38	1800	800	600	–	–	21130-128	**23130-067**	21130-188	**25127-995**
8	42	2000	600	300	21130-235	**23130-224**	21130-129	**23130-067**	21130-189	**25127-995**
9	42	2000	600	600	21130-235	**23130-224**	21130-129	**23130-067**	21130-189	**25127-995**
10	42	2000	600	800						
11	42	2000	800	600	–	–	21130-130	**23130-067**	21130-190	**25127-995**
12	42	2000	800	800						
13	47	2200	600	300	21130-236	23130-225	21130-131	**23130-067**	21130-191	**25127-995**
14	47	2200	600	600	21130-236	23130-225	21130-131	**23130-067**	21130-191	**25127-995**
15	47	2200	600	800						
16	47	2200	800	800	–	–	21130-132	**23130-067**	21130-192	**25127-995**
	Colour combinations				RAL 7035	RAL 7035	RAL 7035		RAL 7035	
17	29	1400	600	600	22130-232	23130-231	22130-123	**23130-067**	22130-183	**25127-995**
18	29	1400	600	800						
19	33	1600	600	600	22130-233	23130-232	22130-125	**23130-067**	22130-185	**25127-995**
20	33	1600	600	800						
21	38	1800	600	600	22130-234	23130-233	22130-127	**23130-067**	22130-187	**25127-995**
22	38	1800	600	800						
23	38	1800	800	600	–	–	22130-128	**23130-067**	22130-188	**25127-995**
24	42	2000	600	300	22130-235	23130-234	22130-129	**23130-067**	22130-189	**25127-995**
25	42	2000	600	600	22130-235	23130-234	22130-129	**23130-067**	22130-189	**25127-995**
26	42	2000	600	800						
27	42	2000	800	600	–	–	22130-130	**23130-067**	22130-190	**25127-995**
28	42	2000	800	800						
29	47	2200	600	300	22130-236	23130-235	22130-131	**23130-067**	22130-191	**25127-995**
30	47	2200	600	600	22130-236	23130-235	22130-131	**23130-067**	22130-191	**25127-995**
31	47	2200	600	800						
32	47	2200	800	800	–	–	22130-132	**23130-067**	22130-192	**25127-995**

Cabinets – Varistar Elektronics ServicePLUS

VARISTAR IP 20 Steel doors

Order Information

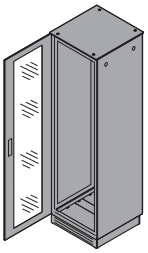

Completely in RAL 7021 (black grey)

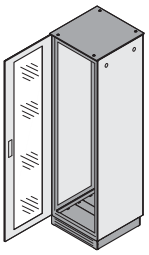

Colour combination RAL 7035 (light grey)/ RAL 7021 (black grey)

					Steel door, single point locking				Steel door 3-point locking	DIN profile half cylinder
					Plain	Solid, inner surface with mounting frame	Perforated	Lever handle		
					01004089	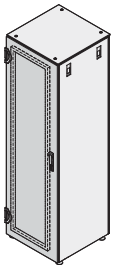 01008067	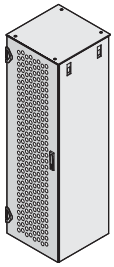 01004090	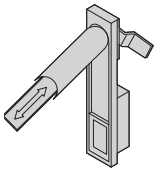 01004147	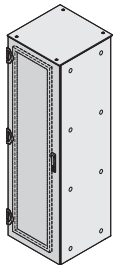 01008085	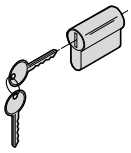 01004148
					St, 1 mm, opening angle 180°, key, incl. GND/ earthing	St, 1.5 mm, opening angle 180°, lock cover incl. GND/ earthing, designed to carry extensive cut-outs and assemblies	St, 1.5 mm, opening angle 180°, key, incl. GND/ earthing	with push button for doors with single point locking	St, 1.5 mm, opening angle 180°, inner side with mounting frame, lever handle with built-in push button, incl. GND/earthing	for lever handle, common locking
	Cabinet dimensions									
No.	Height U	mm	Width mm	Depth mm	1 piece assembled	1 piece assembled	1 piece assembled	1 piece assembled	1 piece assembled	1 piece assembled
Completely in RAL 7021					RAL 7021	RAL 7021	RAL 7021		RAL 7021	
1	29	1400	600	600	21130-108	21130-568	21130-138	**23130-067**	21130-153	**25127-995**
2	29	1400	600	800						
3	33	1600	600	600	21130-110	21130-570	21130-140	**23130-067**	21130-155	**25127-995**
4	33	1600	600	800						
5	38	1800	600	600	21130-112	21130-572	21130-142	**23130-067**	21130-157	**25127-995**
6	38	1800	600	800						
7	38	1800	800	600	21130-113	21130-573	21130-143	**23130-067**	21130-158	**25127-995**
8	42	2000	600	300	21130-114	21130-574	21130-144	**23130-067**	21130-159	**25127-995**
9	42	2000	600	600	21130-114	21130-574	21130-144	**23130-067**	21130-159	**25127-995**
10	42	2000	600	800						
11	42	2000	800	600	21130-115	21130-575	21130-145	**23130-067**	21130-160	**25127-995**
12	42	2000	800	800						
13	47	2200	600	300	21130-116	21130-576	21130-146	**23130-067**	21130-161	**25127-995**
14	47	2200	600	600	21130-116	21130-576	21130-146	**23130-067**	21130-161	**25127-995**
15	47	2200	600	800						
16	47	2200	800	800	21130-117	21130-577	21130-147	**23130-067**	21130-162	**25127-995**
Colour combinations					RAL 7035	RAL 7035	RAL 7035		RAL 7035	
17	29	1400	600	600	22130-108	22130-568	22130-138	**23130-067**	22130-153	**25127-995**
18	29	1400	600	800						
19	33	1600	600	600	22130-110	22130-570	22130-140	**23130-067**	22130-155	**25127-995**
20	33	1600	600	800						
21	38	1800	600	600	22130-112	22130-572	22130-142	**23130-067**	22130-157	**25127-995**
22	38	1800	600	800						
23	38	1800	800	600	22130-113	22130-573	22130-143	**23130-067**	22130-158	**25127-995**
24	42	2000	600	300	22130-114	22130-574	22130-144	**23130-067**	22130-159	**25127-995**
25	42	2000	600	600	22130-114	22130-574	22130-144	**23130-067**	22130-159	**25127-995**
26	42	2000	600	800						
27	42	2000	800	600	22130-115	22130-575	22130-145	**23130-067**	22130-160	**25127-995**
28	42	2000	800	800						
29	47	2200	600	300	22130-116	22130-576	22130-146	**23130-067**	22130-161	**25127-995**
30	47	2200	600	600	22130-116	22130-576	22130-146	**23130-067**	22130-161	**25127-995**
31	47	2200	600	800						
32	47	2200	800	800	22130-117	22130-577	22130-147	**23130-067**	22130-162	**25127-995**

VARISTAR IP 20 Double doors

Order Information

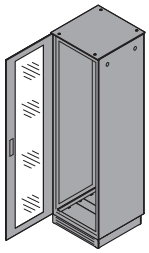

Completely in RAL 7021 (black grey)

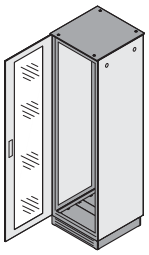

Colour combination RAL 7035 (light grey)/ RAL 7021 (black grey)

	Cabinet dimensions				Double door, 3-point locking			DIN profile half cylinder
					Glazed	Perforated	Plain	
					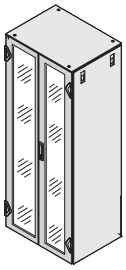 01005065	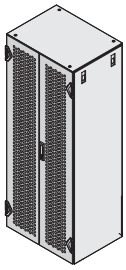 01005066	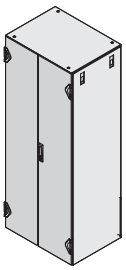 01005064	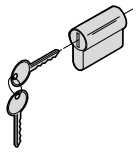 01004148
					frame, St, 1.5 mm, Securit glass, 6 mm, opening angle 180°, lever handle with push button, incl. GND/earthing	St, 1.5 mm, opening angle 180°, lever handle with push button, incl. GND/earthing	St, 1.5 mm, opening angle 180°, lever handle with push button, incl. GND/earthing	for lever handle, common locking
No.	Height U	Height mm	Width mm	Depth mm	1 piece assembled	1 piece assembled	1 piece assembled	1 piece assembled
	Completely in RAL 7021				RAL 7021	RAL 7021	RAL 7021	
1	29	1400	600	600	21130-454	21130-213	21130-486	25127-995
2	29	1400	600	800				
3	33	1600	600	600	21130-456	21130-215	21130-488	25127-995
4	33	1600	600	800				
5	38	1800	600	600	21130-458	21130-217	21130-490	25127-995
6	38	1800	600	800				
7	38	1800	800	600	21130-459	21130-218	21130-491	25127-995
8	42	2000	600	300	21130-460	21130-219	21130-492	25127-995
9	42	2000	600	600	21130-460	21130-219	21130-492	25127-995
10	42	2000	600	800				
11	42	2000	800	600	21130-461	21130-220	21130-493	25127-995
12	42	2000	800	800				
13	47	2200	600	300	21130-462	21130-221	21130-494	25127-995
14	47	2200	600	600	21130-462	21130-221	21130-494	25127-995
15	47	2200	600	800				
16	47	2200	800	800	21130-463	21130-222	21130-495	25127-995
	Colour combinations				RAL 7035	RAL 7035	RAL 7035	
17	29	1400	600	600	22130-454	22130-213	22130-486	25127-995
18	29	1400	600	800				
19	33	1600	600	600	22130-456	22130-215	22130-488	25127-995
20	33	1600	600	800				
21	38	1800	600	600	22130-458	22130-217	22130-490	25127-995
22	38	1800	600	800				
23	38	1800	800	600	22130-459	22130-218	22130-491	25127-995
24	42	2000	600	300	22130-460	22130-219	22130-492	25127-995
25	42	2000	600	600	22130-460	22130-219	22130-492	25127-995
26	42	2000	600	800				
27	42	2000	800	600	22130-461	22130-220	22130-493	25127-995
28	42	2000	800	800				
29	47	2200	600	300	22130-462	22130-221	22130-494	25127-995
30	47	2200	600	600	22130-462	22130-221	22130-494	25127-995
31	47	2200	600	800				
32	47	2200	800	800	22130-463	22130-222	22130-495	25127-995

Cabinets – Varistar Elektronics ServicePLUS

VARISTAR IP 20 Flat top covers, lifting eyes

Order Information

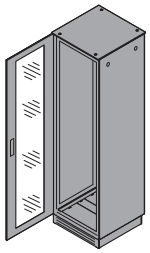

Completely in RAL 7021 (black grey)

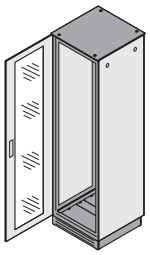

Colour combination RAL 7035 (light grey)/ RAL 7021 (black grey)

					Flat top cover			Spacer	
					Plain flush top cover	Perforated	Lifting eye	Spacer	Lifting eye
					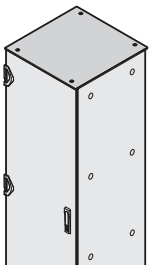 01004096	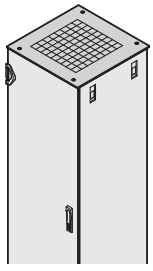 01004097	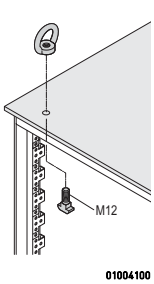 01004100	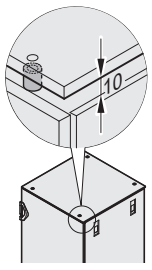 01004099	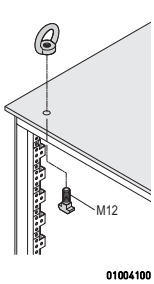 01004100
					St, 1.5 mm, incl. GND/ earthing	St, 1.5 mm, fully perforated, incl. GND/ earthing	for top cover, applications and load in accordance with DIN 582	St, zinc-plated, for raising a top cover by 10 mm	for raised flat top cover, application and static load-carrying capacity in accordance with DIN 582
	Cabinet dimensions								
No.	Height U	mm	Width mm	Depth mm	1 piece assembled	1 piece assembled	PU 4 pieces assembled	PU 4 pieces assembled	PU 4 pieces assembled
Completely in RAL 7021					RAL 7021	RAL 7021			
1	29	1400	600	600	21130-242	21130-262	**23130-072**	**23130-068**	**23130-085**
2	29	1400	600	800	21130-243	21130-263			
3	33	1600	600	600	21130-242	21130-262	**23130-072**	**23130-068**	**23130-085**
4	33	1600	600	800	21130-243	21130-263			
5	38	1800	600	600	21130-242	21130-262	**23130-072**	**23130-068**	**23130-085**
6	38	1800	600	800	21130-243	21130-263			
7	38	1800	800	600	21130-246	21130-266	**23130-072**	**23130-068**	**23130-085**
8	42	2000	600	300	21130-241	21130-261	**23130-072**	**23130-068**	**23130-085**
9	42	2000	600	600	21130-242	21130-262	**23130-072**	**23130-068**	**23130-085**
10	42	2000	600	800	21130-243	21130-263			
11	42	2000	800	600	21130-246	21130-266	**23130-072**	**23130-068**	**23130-085**
12	42	2000	800	800	21130-247	21130-267			
13	47	2200	600	300	21130-241	21130-261	**23130-072**	**23130-068**	**23130-085**
14	47	2200	600	600	21130-242	21130-262	**23130-072**	**23130-068**	**23130-085**
15	47	2200	600	800	21130-243	21130-263			
16	47	2200	800	800	21130-247	21130-267	**23130-072**	**23130-068**	**23130-085**
Colour combinations					RAL 7021	RAL 7021			
17	29	1400	600	600	21130-242	21130-262	**23130-072**	**23130-068**	**23130-085**
18	29	1400	600	800	21130-243	21130-263			
19	33	1600	600	600	21130-242	21130-262	**23130-072**	**23130-068**	**23130-085**
20	33	1600	600	800	21130-243	21130-263			
21	38	1800	600	600	21130-242	21130-262	**23130-072**	**23130-068**	**23130-085**
22	38	1800	600	800	21130-243	21130-263			
23	38	1800	800	600	21130-246	21130-266	**23130-072**	**23130-068**	**23130-085**
24	42	2000	600	300	21130-241	21130-261	**23130-072**	**23130-068**	**23130-085**
25	42	2000	600	600	21130-242	21130-262	**23130-072**	**23130-068**	**23130-085**
26	42	2000	600	800	21130-243	21130-263			
27	42	2000	800	600	21130-246	21130-266	**23130-072**	**23130-068**	**23130-085**
28	42	2000	800	800	21130-247	21130-267			
29	47	2200	600	300	21130-241	21130-261	**23130-072**	**23130-068**	**23130-085**
30	47	2200	600	600	21130-242	21130-262	**23130-072**	**23130-068**	**23130-085**
31	47	2200	600	800	21130-243	21130-263			
32	47	2200	800	800	21130-247	21130-267	**23130-072**	**23130-068**	**23130-085**

Cabinets – Varistar Elektronics ServicePLUS

VARISTAR IP 20 Flat top cover assemblies with cut-out zones

Order Information

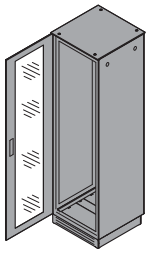

Completely in RAL 7021 (black grey)

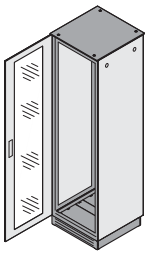

Colour combination RAL 7035 (light grey)/ RAL 7021 (black grey)

No.	Cabinet dimensions Height U	Height mm	Width mm	Depth mm	Flat top cover with cut-out zones	Top cover assemblies: Brush strip	Fan insert	Thermostat	Top cover plate, perforated	Edge protection	Lifting eye
					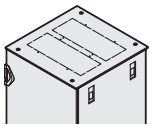 01004098	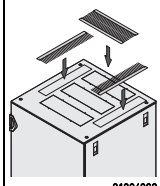 01006092	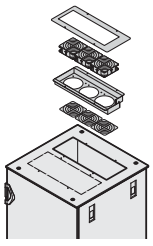 01004102	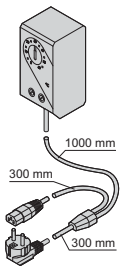 01108052	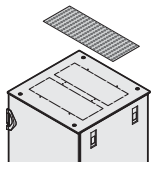 01009056	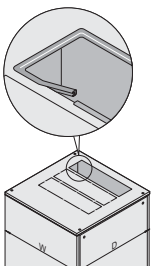 41003065	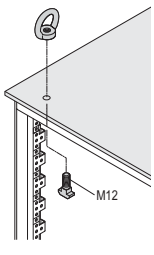 01004100
					1 piece assembled	PU 2 pieces assembled	1 piece assembled	1 piece assembled	1 piece assembled	1 piece enclosed loose	PU 4 pieces assembled
	Completely in RAL 7021				RAL 7021	RAL 7021			RAL 7021		
1	29	1400	600	600	21130-252	23130-069	23130-070	20118-750	23130-071	28127-281	23130-072
2	29	1400	600	800	21130-253						
3	33	1600	600	600	21130-252	23130-069	23130-070	20118-750	23130-071	28127-281	23130-072
4	33	1600	600	800	21130-253						
5	38	1800	600	600	21130-252	23130-069	23130-070	20118-750	23130-071	28127-281	23130-072
6	38	1800	600	800	21130-253						
7	38	1800	800	600	21130-256	23130-069	23130-070	20118-750	23130-071	28127-281	23130-072
8	42	2000	600	300	–	–	–	–	–	–	–
9	42	2000	600	600	21130-252	23130-069	23130-070	20118-750	23130-071	28127-281	23130-072
10	42	2000	600	800	21130-253						
11	42	2000	800	600	21130-256	23130-069	23130-070	20118-750	23130-071	28127-281	23130-072
12	42	2000	800	800	21130-257						
13	47	2200	600	300	–	–	–	–	–	–	–
14	47	2200	600	600	21130-252	23130-069	23130-070	20118-750	23130-071	28127-281	23130-072
15	47	2200	600	800	21130-253						
16	47	2200	800	800	21130-257	23130-069	23130-070	20118-750	23130-071	28127-281	23130-072
	Colour combinations				RAL 7021	RAL 7021			RAL 7021		
17	29	1400	600	600	21130-252	23130-069	23130-070	20118-750	23130-071	28127-281	23130-072
18	29	1400	600	800	21130-253						
19	33	1600	600	600	21130-252	23130-069	23130-070	20118-750	23130-071	28127-281	23130-072
20	33	1600	600	800	21130-253						
21	38	1800	600	600	21130-252	23130-069	23130-070	20118-750	23130-071	28127-281	23130-072
22	38	1800	600	800	21130-253						
23	38	1800	800	600	21130-256	23130-069	23130-070	20118-750	23130-071	28127-281	23130-072
24	42	2000	600	300	–	–	–	–	–	–	–
25	42	2000	600	600	21130-252	23130-069	23130-070	20118-750	23130-071	28127-281	23130-072
26	42	2000	600	800	21130-253						
27	42	2000	800	600	21130-256	23130-069	23130-070	20118-750	23130-071	28127-281	23130-072
28	42	2000	800	800	21130-257						
29	47	2200	600	300	–	–	–	–	–	–	–
30	47	2200	600	600	21130-252	23130-069	23130-070	20118-750	23130-071	28127-281	23130-072
31	47	2200	600	800	21130-253						
32	47	2200	800	800	21130-257	23130-069	23130-070	20118-750	23130-071	28127-281	23130-072

Cabinets – Varistar Elektronics ServicePLUS

VARISTAR IP 20 Fan top covers

Order Information

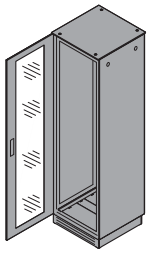

Completely in RAL 7021 (black grey)

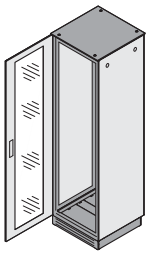

Colour combination RAL 7035 (light grey)/ RAL 7021 (black grey)

					Fan top cover				
					Top cover for 6 fans	Replacement fan for fan top	Thermostat	Speed control	Lifting eye
					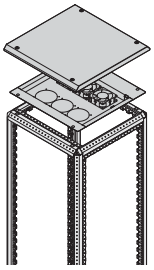 01005060	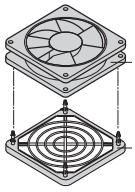 kta44844	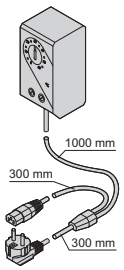 01108052	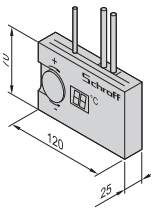 01105055	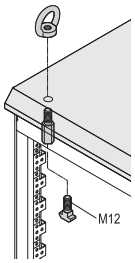 01005085
					St, 1.5 mm, raised cover, 3 axial fans, 230 V_{AC}, incl. cabling andGND/earthing, connecting cable 2.5 m, SCHUKO/ IEC60320 C12 plug	fan with grille for top assembly, 230 V_{AC}, 38x119x119 mm, for 50 Hz, 162 m^3/h	with mains cable 230 V_{AC} (SCHUKO/UTE plug/ IEC 60320 C13 socket), adjustment range 0 ... 60°C	fully wired, 90 ... 264 V_{AC}, input SCHUKO/UTE plug, outlet IEC 60320 C1 3 socket; external NTC sensor 1.5 m	for fan top cover, applications and static load-carrying capacity in accordance with DIN 582
	Cabinet dimensions								
	Height		Width	Depth					
No.	U	mm	mm	mm	1 piece assembled	1 piece assembled	1 piece assembled	1 piece assembled	PU 4 pieces assembled
Completely in RAL 7021					RAL 7021				
1	29	1400	600	600	21130-400	**23130-165**	**20118-750**	**60715-005**	23130-090
2	29	1400	600	800	21130-401				
3	33	1600	600	600	21130-400	**23130-165**	**20118-750**	**60715-005**	23130-090
4	33	1600	600	800	21130-401				
5	38	1800	600	600	21130-400	**23130-165**	**20118-750**	**60715-005**	23130-090
6	38	1800	600	800	21130-401				
7	38	1800	800	600	21130-402	**23130-165**	**20118-750**	**60715-005**	23130-090
8	42	2000	600	300	–	–	–	–	–
9	42	2000	600	600	21130-400	**23130-165**	**20118-750**	**60715-005**	23130-090
10	42	2000	600	800	21130-401				
11	42	2000	800	600	21130-402	**23130-165**	**20118-750**	**60715-005**	23130-090
12	42	2000	800	800	21130-403				
13	47	2200	600	300	–	–	–	–	–
14	47	2200	600	600	21130-400	**23130-165**	**20118-750**	**60715-005**	23130-090
15	47	2200	600	800	21130-401				
16	47	2200	800	800	21130-403	**23130-165**	**20118-750**	**60715-005**	23130-090
Colour combinations					RAL 7021				
17	29	1400	600	600	21130-400	**23130-165**	**20118-750**	**60715-005**	23130-090
18	29	1400	600	800	21130-401				
19	33	1600	600	600	21130-400	**23130-165**	**20118-750**	**60715-005**	23130-090
20	33	1600	600	800	21130-401				
21	38	1800	600	600	21130-400	**23130-165**	**20118-750**	**60715-005**	23130-090
22	38	1800	600	800	21130-401				
23	38	1800	800	600	21130-402	**23130-165**	**20118-750**	**60715-005**	23130-090
24	42	2000	600	300	–	–	–	–	–
25	42	2000	600	600	21130-400	**23130-165**	**20118-750**	**60715-005**	23130-090
26	42	2000	600	800	21130-401				
27	42	2000	800	600	21130-402	**23130-165**	**20118-750**	**60715-005**	23130-090
28	42	2000	800	800	21130-403				
29	47	2200	600	300	–	–	–	–	–
30	47	2200	600	600	21130-400	**23130-165**	**20118-750**	**60715-005**	23130-090
31	47	2200	600	800	21130-401				
32	47	2200	800	800	21130-403	**23130-165**	**20118-750**	**60715-005**	23130-090

Order Information

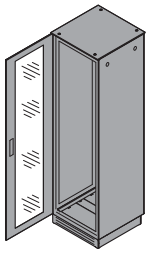

Completely in RAL 7021 (black grey)

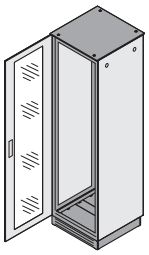

Colour combination RAL 7035 (light grey)/ RAL 7021 (black grey)

					Base plate				Base/plinth		Base/plinth, mobile
					Base plate, multi-piece	Brush strip	Dust filter set	Cover plate	Base/plinth, ventilated	Side covers	
					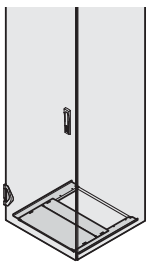 01004104	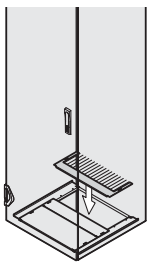 01004105	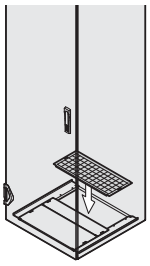 01004059	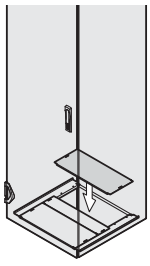 01004106	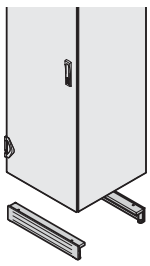 01004110	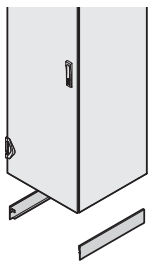 01004053	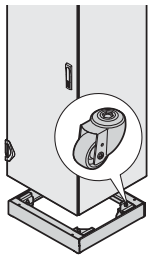 01004111
					St, 1.5 mm, multi-piece, opening to rear 200 mm deep (no rear opening with 300 mm cabinet depth), incl. GND/ earthing ; dimension drawings see page 1.9	nylon, black	filter mat, white, class M1, in accordance with EN 799-G3	St, 1.5 mm, please order gasket IP55 separately	support with adjustable feet and 2 trims, perforated, static load-carrying capacity 1000 kg; please order side trims separately	St, 1.5 mm	support, St, 3 mm, trim, St, 1.5 mm, static load-carrying capacity on castors 400 kg, on adjustable feet 1000 kg
	Cabinet dimensions										
	Height		Width	Depth	1 piece	1 piece	1 piece	1 piece	PU 1 kit	PU 1 pair	1 piece
No.	U	mm	mm	mm	assembled	assembled	assembled	assembled	assembled	assembled	assembled
	Completely in RAL 7021				RAL 7021	RAL 7021		RAL 7021	RAL 7021	RAL 7021	RAL 7021
1	29	1400	600	600	23130-001	23130-074	23130-075	23130-076	23130-187	23130-169	23130-208
2	29	1400	600	800	23130-002					23130-170	23130-209
3	33	1600	600	600	23130-001	23130-074	23130-075	23130-076	23130-187	23130-169	23130-208
4	33	1600	600	800	23130-002					23130-170	23130-209
5	38	1800	600	600	23130-001	23130-074	23130-075	23130-076	23130-187	23130-169	23130-208
6	38	1800	600	800	23130-002					23130-170	23130-209
7	38	1800	800	600	23130-005	23130-134	23130-135	23130-136	23130-194	23130-169	23130-212
8	42	2000	600	300	23130-009	23130-074	23130-075	–	23130-187	23130-166	–
9	42	2000	600	600	23130-001	23130-074	23130-075	23130-076	23130-187	23130-169	23130-208
10	42	2000	600	800	23130-002					23130-170	23130-209
11	42	2000	800	600	23130-005	23130-134	23130-135	23130-136	23130-194	23130-169	23130-212
12	42	2000	800	800	23130-006					23130-170	23130-213
13	47	2200	600	300	23130-009	23130-074	23130-075	–	23130-187	23130-166	–
14	47	2200	600	600	23130-001	23130-074	23130-075	23130-076	23130-187	23130-169	23130-208
15	47	2200	600	800	23130-002					23130-170	23130-209
16	47	2200	800	800	23130-006	23130-134	23130-135	23130-136	23130-194	23130-170	23130-213
	Colour combinations				RAL 7021	RAL 7021		RAL 7021	RAL 7021	RAL 7021	RAL 7021
17	29	1400	600	600	23130-001	23130-074	23130-075	23130-076	23130-187	23130-169	23130-208
18	29	1400	600	800	23130-002					23130-170	23130-209
19	33	1600	600	600	23130-001	23130-074	23130-075	23130-076	23130-187	23130-169	23130-208
20	33	1600	600	800	23130-002					23130-170	23130-209
21	38	1800	600	600	23130-001	23130-074	23130-075	23130-076	23130-187	23130-169	23130-208
22	38	1800	600	800	23130-002					23130-170	23130-209
23	38	1800	800	600	23130-005	23130-134	23130-135	23130-136	23130-194	23130-169	23130-212
24	42	2000	600	300	23130-009	23130-074	23130-075	–	23130-187	23130-166	–
25	42	2000	600	600	23130-001	23130-074	23130-075	23130-076	23130-187	23130-169	23130-208
26	42	2000	600	800	23130-002					23130-170	23130-209
27	42	2000	800	600	23130-005	23130-134	23130-135	23130-136	23130-194	23130-169	23130-212
28	42	2000	800	800	23130-006					23130-170	23130-213
29	47	2200	600	300	23130-009	23130-074	23130-075	–	23130-187	23130-166	–
30	47	2200	600	600	23130-001	23130-074	23130-075	23130-076	23130-187	23130-169	23130-208
31	47	2200	600	800	23130-002					23130-170	23130-209
32	47	2200	800	800	23130-006	23130-134	23130-135	23130-136	23130-194	23130-170	23130-213

Cabinets – Varistar Elektronics ServicePLUS

VARISTAR IP 20 Connecting plates for short doors/rear panels

Order Information

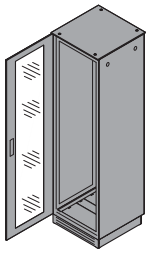 Completely in RAL 7021 (black grey) 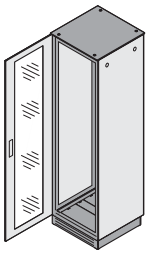 Colour combination RAL 7035 (light grey)/ RAL 7021 (black grey)	Dimensioning connecting plate door/rear panel	Connecting plate for door and rear panel			Other VARISTAR interior mounting parts
		Plain	With brush strip	Assembly kit	
	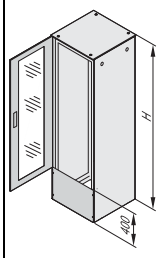 01005071	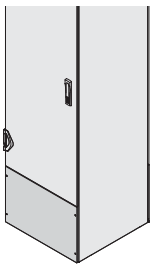 01005063	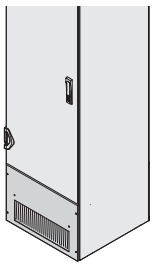 01005069		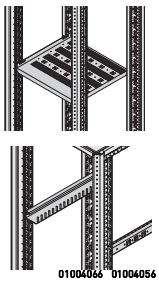 01004066 01004056
	door and rear panel must be selected 400 mm shorter than the cabinet height; cannot be used with double door	St, 1 mm, assembly also possible at top, height 400 mm, please order assembly kit separately in conjunction with rear panel	St, 1 mm, assembly also possible at top, height 400 mm, please order assembly kit separately in conjunction with rear panel	only required if rear panel with quick-release fastener is assembled above the connecting plate	rack shelves, 19" shelves, slide rails, cable ducting
Height mm / Width mm		1 piece assembled	1 piece assembled	PU 1 kit assembled	
Completely in RAL 7021		RAL 7021	RAL 7021		
400 600		21130-472	21130-478	23130-164	from page 1.44
400 800		21130-473	21130-479	23130-164	
Colour combinations		RAL 7035	RAL 7035		
400 600		22130-472	22130-478	23130-164	from page 1.44
400 800		22130-473	22130-479	23130-164	

Cabinets – Varistar Elektronics ServicePLUS

configuration

Components can be varied and combined freely

Simple. Fast. To the ideal product.

- Configuration tables from page 1.39
- Online configuration: www.schroff.co.uk/configuration

assembly

Fitting of all mechanical, electrical and electronic components by our specialists

Assembled by professionals. Double benefit!

- Without extra cost
- Ready for despatch within 10 working days

modification

Custom drilling, cut-outs and special colours for off-the-shelf products

Small changes. Large impact.

- Download CAD data and send back with modifications
- Ready for despatch within 10 working days

solution

Integration and custom developments

Simple. Fast. From one source.

- Climate control, complete assembly, cabling (power supply), function test
- Special sizes, customised solutions

academy

Knowledge transfer and partnership

Knowledge. Sharing. Partnerships.

- Seminars, white papers, CAD drawings, test reports, user reports
- Further information: www.varistar.co.uk

lifecycle

Flexible support throughout the product lifecycle

We are with you. For the entire product life.

- Delivery to point of use, installation service, exchange service, replacement parts

Cabinets – Varistar Elektronics ServicePLUS

VARISTAR IP 55 ServicePLUS: configuration and assembly

- Dimensions:
  - Height: 29 ... 47 U (1400 ... 2200 mm)
  - Width: 600 and 800 mm
  - Depth: 300, 600 and 800 mm
- 2 colour combinations:
  - Frame and covers in black grey (RAL 7021)
  - Frame, top cover and base in black grey (RAL 7021); Side panel, door and rear panel in light grey (RAL 7035)
- Build your cabinet out of individual components (please suffix each part number with /05)
- Once you have selected the desired cabinet dimensions, the row number (first column of the configuration tables) will guide you through all subsequent configuration pages that apply to these dimensions (see example below)
- The cabinet is assembled by us and ready for despatch within 10 working days

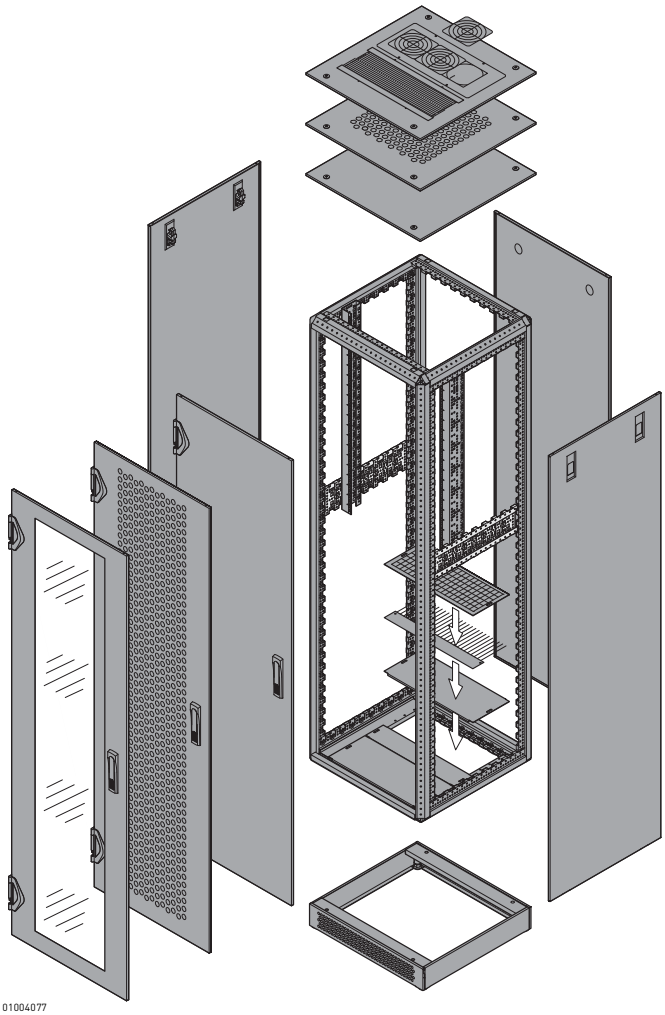

01004077

	Page
Frames, side-by-side mounting kits, adjustable feet, castors	1.40
Side panels, rear panels, doors, top covers	1.41
Flat top covers, lifting eyes	1.42
Connecting plates for short doors/rear panels	1.43
Interior configuration for IP 20 and IP 55	
19" panel/slide mounts	1.44
ETSI panel/slide mounts	1.45
Swing frames	1.46
Mounting plates, stationary shelves, 75 kg	1.47
Telescopic shelves, 70 kg	1.48
19" shelves 1 U, fixed 75 kg, telescopic 30 kg	1.49
19" telescopic shelves, 2 U, 70 kg	1.50
Slide rails, depth members	1.51
Cable ductings	1.52
Cable ties, Velcro	1.53

Example configuration (here: row 10)

Qty	Description	Part no.
1	Frame Slim-Line, height 2000 mm, width 600 mm, depth 800 mm, 1 piece	20130-019/05
1	IP 55 gasketing kit, 1 piece	23130-064/05
1	Side panel, screw-fixed, RAL 7021, PU 2 pieces	21130-011/05
1	Rear panel, screw-fixed, RAL 7021, 1 piece	21130-069/05
1	Glazed door with 3-point locking, RAL 7021, IP 55, 1 piece	21130-189/05
1	Adjustable feet, PU 4 pieces	23130-079/05
..	.....	.....

Cabinets – Varistar Elektronics ServicePLUS

VARISTAR IP 55 Frames, side-by-side mounting kits, adjustable feet, castors

Order Information

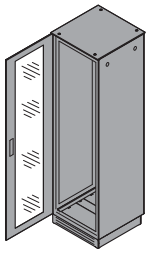

Completely in RAL 7021 (black grey)

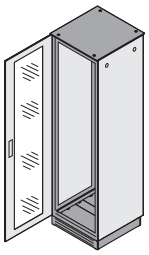

Colour combination RAL 7035 (light grey)/ RAL 7021 (black grey)

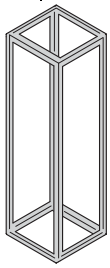

01004078

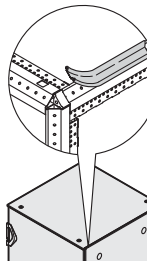

01004157

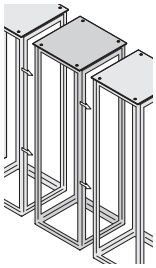

01004120

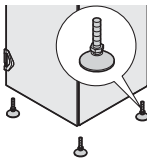

01004081

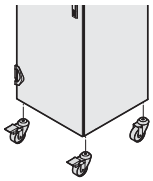

01004082

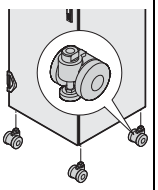

01004158

	Cabinet dimensions				Frame		Gasket kit IP 55	Side-by-side mounting kit IP 55 (with gasketing)	Adjustable feet	Castors	
					Slim-Line 400 kg	Heavy-Duty 800 kg				with 2 jacking feet	with adjustable feet
					static load-carrying capacity: 400 kg, St, 1.5 mm, zinc-plated, with central GND/ earthing point; please order adjustable feet or castors separately	static load-carrying capacity: 800 kg, St, 1.5 mm, zinc-plated, with central GND/ earthing point; please order adjustable feet or castors separately	seals are glued to the frame, so that all cladding parts conform to protection type IP 55	side-to-side mounting bracket (4 pieces), St, RAL 7021, incl. gasketing to cover the gap between two racks; cannot be used with decorative frame	for the frame, static load-carrying capacity: 1000 kg, cannot be used with base/plinth	for the frame, static load-carrying capacity: 400 kg, cannot be used with base/plinth	for the frame, static load-carrying capacity: 400 kg, cannot be used with base/plinth
	Height		Width	Depth	1 piece	1 piece	PU 1 kit	PU 1 kit	PU 4 pieces	PU 4 pieces	PU 4 pieces
No.	U	mm	mm	mm	assembled	assembled	assembled	supplied loose	assembled		
	Completely in RAL 7021				RAL 7021	RAL 7021					
1	29	1400	600	600	20130-005	20130-055	23130-064	23130-062	23130-079	23130-077	23130-078
2	29	1400	600	800	20130-006	20130-056					
3	33	1600	600	600	20130-009	20130-059	23130-064	23130-062	23130-079	23130-077	23130-078
4	33	1600	600	800	20130-010	20130-060					
5	38	1800	600	600	20130-013	20130-063	23130-064	23130-062	23130-079	23130-077	23130-078
6	38	1800	600	800	20130-014	20130-064					
7	38	1800	800	600	20130-015	20130-065	23130-064	23130-062	23130-079	23130-077	23130-078
8	42	2000	600	300	20130-017	–	23130-064	23130-062	23130-079	23130-077	23130-078
9	42	2000	600	600	20130-018	20130-068	23130-064	23130-062	23130-079	23130-077	23130-078
10	42	2000	600	800	20130-019	20130-069					
11	42	2000	800	600	20130-022	20130-072	23130-064	23130-062	23130-079	23130-077	23130-078
12	42	2000	800	800	20130-023	20130-073					
13	47	2200	600	300	20130-026	–	23130-064	23130-062	23130-079	23130-077	23130-078
14	47	2200	600	600	20130-027	20130-077	23130-064	23130-062	23130-079	23130-077	23130-078
15	47	2200	600	800	20130-028	20130-078					
16	47	2200	800	800	20130-032	20130-082	23130-064	23130-062	23130-079	23130-077	23130-078
	Colour combinations				RAL 7021	RAL 7021					
17	29	1400	600	600	20130-005	20130-055	23130-064	23130-062	23130-079	23130-077	23130-078
18	29	1400	600	800	20130-006	20130-056					
19	33	1600	600	600	20130-009	20130-059	23130-064	23130-062	23130-079	23130-077	23130-078
20	33	1600	600	800	20130-010	20130-060					
21	38	1800	600	600	20130-013	20130-063	23130-064	23130-062	23130-079	23130-077	23130-078
22	38	1800	600	800	20130-014	20130-064					
23	38	1800	800	600	20130-015	20130-065	23130-064	23130-062	23130-079	23130-077	23130-078
24	42	2000	600	300	20130-017	–	23130-064	23130-062	23130-079	23130-077	23130-078
25	42	2000	600	600	20130-018	20130-068	23130-064	23130-062	23130-079	23130-077	23130-078
26	42	2000	600	800	20130-019	20130-069					
27	42	2000	800	600	20130-022	20130-072	23130-064	23130-062	23130-079	23130-077	23130-078
28	42	2000	800	800	20130-023	20130-073					
29	47	2200	600	300	20130-026	–	23130-064	23130-062	23130-079	23130-077	23130-078
30	47	2200	600	600	20130-027	20130-077	23130-064	23130-062	23130-079	23130-077	23130-078
31	47	2200	600	800	20130-028	20130-078					
32	47	2200	800	800	20130-032	20130-082	23130-064	23130-062	23130-079	23130-077	23130-078

Other dimensions and configurations online (with basket) at www.schroff.biz/conf

Cabinets – Varistar Elektronics ServicePLUS

VARISTAR IP 55 Side panels, rear panels, doors, top covers

Order Information

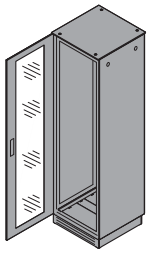

Completely in RAL 7021 (black grey)

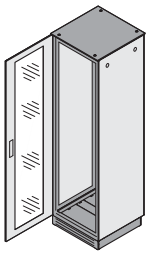

Colour combination RAL 7035 (light grey)/ RAL 7021 (black grey)

No.	Cabinet dimensions Height U	mm	Width mm	Depth mm	Screw-fixed side panel	Screw-fixed rear panel	Glazed door 3-point locking	Steel door 3-point locking	DIN profile half cylinder	Plain flush top cover: Flat top cover	Plain flush top cover: Lifting eye
					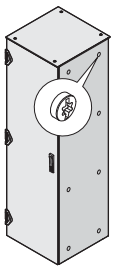 01004083	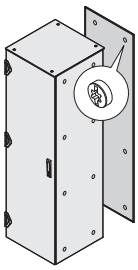 01004085	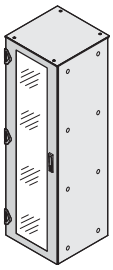 01004091	01008085	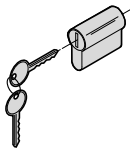 01004148	01004096	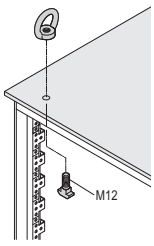 01004100
					St, 1 mm, incl. GND/earthing	St, 1 mm, incl. GND/earthing	St, 1.5 mm, Sekurit glass, 6 mm, opening angle 180°, lever handle with push button, incl. GND/ earthing	St, 1.5 mm, opening angle 180°, inner side with mounting frame, lever handle with built-in push button, incl. GND/ earthing	for lever handle, common locking	St, 1.5 mm, incl. GND/earthing	for top cover, applications and load in compliance with DIN 582
					PU 2 pieces assembled	1 piece assembled	1 piece assembled	1 piece assembled	1 piece assembled	1 piece assembled	PU 4 pieces assembled
Completely in RAL 7021					RAL 7021	RAL 7021	RAL 7021	RAL 7021		RAL 7021	
1	29	1400	600	600	21130-003	21130-063	21130-183	21130-153	**25127-995**	21130-242	**23130-072**
2	29	1400	600	800	21130-004					21130-243	
3	33	1600	600	600	21130-005	21130-065	21130-185	21130-155	**25127-995**	21130-242	**23130-072**
4	33	1600	600	800	21130-006					21130-243	
5	38	1800	600	600	21130-007	21130-067	21130-187	21130-157	**25127-995**	21130-242	**23130-072**
6	38	1800	600	800	21130-008					21130-243	
7	38	1800	800	600	21130-007	21130-068	21130-188	21130-158	**25127-995**	21130-246	**23130-072**
8	42	2000	600	300	21130-009	21130-069	21130-189	21130-159	**25127-995**	21130-241	**23130-072**
9	42	2000	600	600	21130-010	21130-069	21130-189	21130-159	**25127-995**	21130-242	**23130-072**
10	42	2000	600	800	21130-011					21130-243	
11	42	2000	800	600	21130-010	21130-070	21130-190	21130-160	**25127-995**	21130-246	**23130-072**
12	42	2000	800	800	21130-011					21130-247	
13	47	2200	600	300	21130-014	21130-071	21130-191	21130-161	**25127-995**	21130-241	**23130-072**
14	47	2200	600	600	21130-015	21130-071	21130-191	21130-161	**25127-995**	21130-242	**23130-072**
15	47	2200	600	800	21130-016					21130-243	
16	47	2200	800	800	21130-016	21130-072	21130-192	21130-162	**25127-995**	21130-247	**23130-072**
Colour combinations					RAL 7035	RAL 7035	RAL 7035	RAL 7035		RAL 7021	
17	29	1400	600	600	22130-003	22130-063	22130-183	22130-153	**25127-995**	21130-242	**23130-072**
18	29	1400	600	800	22130-004					21130-243	
19	33	1600	600	600	22130-005	22130-065	22130-185	22130-155	**25127-995**	21130-242	**23130-072**
20	33	1600	600	800	22130-006					21130-243	
21	38	1800	600	600	22130-007	22130-067	22130-187	22130-157	**25127-995**	21130-242	**23130-072**
22	38	1800	600	800	22130-008					21130-243	
23	38	1800	800	600	22130-007	22130-068	22130-188	22130-158	**25127-995**	21130-246	**23130-072**
24	42	2000	600	300	22130-009	22130-069	22130-189	22130-159	**25127-995**	21130-241	**23130-072**
25	42	2000	600	600	22130-010	22130-069	22130-189	22130-159	**25127-995**	21130-242	**23130-072**
26	42	2000	600	800	22130-011					21130-243	
27	42	2000	800	600	22130-010	22130-070	22130-190	22130-160	**25127-995**	21130-246	**23130-072**
28	42	2000	800	800	22130-011					21130-247	
29	47	2200	600	300	22130-014	22130-071	22130-191	22130-161	**25127-995**	21130-241	**23130-072**
30	47	2200	600	600	22130-015	22130-071	22130-191	22130-161	**25127-995**	21130-242	**23130-072**
31	47	2200	600	800	22130-016					21130-243	
32	47	2200	800	800	22130-016	22130-072	22130-192	22130-162	**25127-995**	21130-247	**23130-072**

Cabinets – Varistar Elektronics ServicePLUS

VARISTAR IP 55 Flat top covers, lifting eyes

Order Information

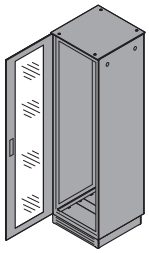

Completely in RAL 7021 (black grey)

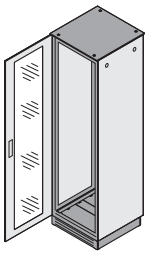

Colour combination RAL 7035 (light grey)/ RAL 7021 (black grey)

	Cabinet dimensions				Base plate			Base plate, one-piece, EMC, IP 55	Base/plinth		Base/plinth, mobile
					Base plate, multi-piece	Cover plate	Seal IP 55		Base/plinth, ventilated	Side cover	
					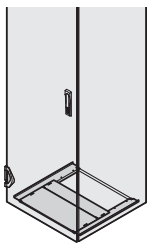 01004104	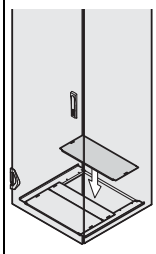 01004106	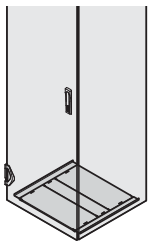 01004073	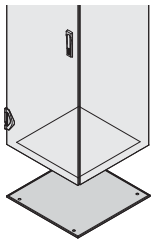 01004051	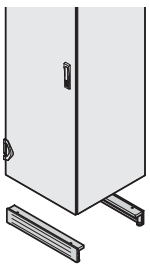 01004110	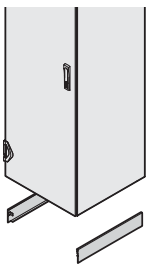 01004053	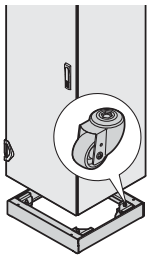 01004111
					St, 1.5 mm, multi-piece, opening to rear 200 mm deep (no rear opening with 300 mm cabinet depth), incl. GND/ earthing, dimension drawings see page 1.9	St, 1.5 mm, please order gasket IP55 separately	for base plate with cover	AlZn, 1.5 mm, incl. GND/ earthing, assembly from outside	support with adjustable feet and 2 trims, perforated, static load-carrying capacity 1000 kg; please order side trims separately	St, 1.5 mm	support, St, 3 mm, trim, St, 1.5 mm, static load-carrying capacity on castors 400 kg, on adjustable feet 1000 kg
	Height		Width	Depth	1 piece	1 piece	1 piece	1 piece	PU 1 kit	PU 1 pair	1 piece
No.	U	mm	mm	mm	assembled	assembled	assembled	assembled	assembled	assembled	assembled
	Completely in RAL 7021				RAL 7021	RAL 7021		AlZn	RAL 7021	RAL 7021	RAL 7021
1	29	1400	600	600	23130-001	23130-076	23130-073	21130-281	23130-187	23130-169	23130-208
2	29	1400	600	800	23130-002			21130-282		23130-170	23130-209
3	33	1600	600	600	23130-001	23130-076	23130-073	21130-281	23130-187	23130-169	23130-208
4	33	1600	600	800	23130-002			21130-282		23130-170	23130-209
5	38	1800	600	600	23130-001	23130-076	23130-073	21130-281	23130-187	23130-169	23130-208
6	38	1800	600	800	23130-002			21130-282		23130-170	23130-209
7	38	1800	800	600	23130-005	23130-036	23130-073	21130-283	23130-194	23130-169	23130-212
8	42	2000	600	300	23130-009	–	23130-073	21130-285	23130-187	23130-166	–
9	42	2000	600	600	23130-001	23130-076	23130-073	21130-281	23130-187	23130-169	23130-208
10	42	2000	600	800	23130-002			21130-282		23130-170	23130-209
11	42	2000	800	600	23130-005	23130-036	23130-073	21130-283	23130-194	23130-169	23130-212
12	42	2000	800	800	23130-006			21130-284		23130-170	23130-213
13	47	2200	600	300	23130-009	–	23130-073	21130-285	23130-187	23130-166	–
14	47	2200	600	600	23130-001	23130-076	23130-073	21130-281	23130-187	23130-169	23130-208
15	47	2200	600	800	23130-002			21130-282		23130-170	23130-209
16	47	2200	800	800	23130-006	23130-076	23130-073	21130-284	23130-194	23130-170	23130-213
	Colour combinations				RAL 7021	RAL 7021		AlZn	RAL 7021	RAL 7021	RAL 7021
17	29	1400	600	600	23130-001	23130-076	23130-073	21130-281	23130-187	23130-169	23130-208
18	29	1400	600	800	23130-002			21130-282		23130-170	23130-209
19	33	1600	600	600	23130-001	23130-076	23130-073	21130-281	23130-187	23130-169	23130-208
20	33	1600	600	800	23130-002			21130-282		23130-170	23130-209
21	38	1800	600	600	23130-001	23130-076	23130-073	21130-281	23130-187	23130-169	23130-208
22	38	1800	600	800	23130-002			21130-282		23130-170	23130-209
23	38	1800	800	600	23130-005	23130-036	23130-073	21130-283	23130-194	23130-169	23130-212
24	42	2000	600	300	23130-009	–	23130-073	21130-285	23130-187	23130-166	–
25	42	2000	600	600	23130-001	23130-076	23130-073	21130-281	23130-187	23130-169	23130-208
26	42	2000	600	800	23130-002			21130-282		23130-170	23130-209
27	42	2000	800	600	23130-005	23130-036	23130-073	21130-283	23130-194	23130-169	23130-212
28	42	2000	800	800	23130-006			21130-284		23130-170	23130-213
29	47	2200	600	300	23130-009	–	23130-073	21130-285	23130-187	23130-166	–
30	47	2200	600	600	23130-001	23130-076	23130-073	21130-281	23130-187	23130-169	23130-208
31	47	2200	600	800	23130-002			21130-282		23130-170	23130-209
32	47	2200	800	800	23130-006	23130-076	23130-073	21130-284	23130-194	23130-170	23130-213

Cabinets – Varistar Elektronics ServicePLUS

VARISTAR IP 55 Connecting plates for short doors/rear panels

Order Information

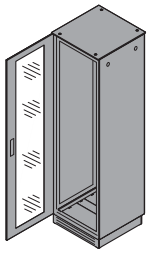 Completely in RAL 7021 (black grey) 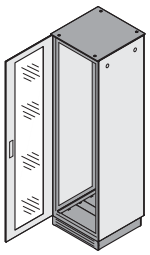 Colour combination RAL 7035 (light grey)/ RAL 7021 (black grey)		Dimensioning connecting plate door/rear panel 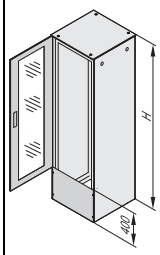 01005071 door and rear panel must be selected 400 mm shorter than the cabinet height; cannot be used with double door	Connecting plate 01005072 St, 1 mm, can also be fitted in upper part, height 400 mm, with assembly kit
Height mm	Width mm		1 piece assembled
Completely in RAL 7021			RAL 7021
400	600		21130-504
400	800		21130-505
Colour combinations			RAL 7035
400	600		22130-504
400	800		22130-505

Interior mounting 19" panel/slide mounts

Order Information

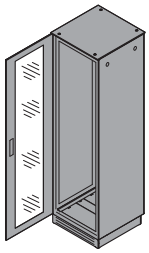

Completely in RAL 7021 (black grey)

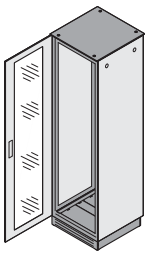

Colour combination RAL 7035 (light grey)/ RAL 7021 (black grey)

Dimension Standard fitting

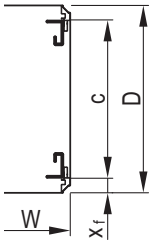

01004146

x_f = distance from front
c = pitch of 19" panel/slide mounts
D = cabinet depth
W = cabinet width

19" panel/slide mounts EIA

Painted RAL 7021 | AlZn

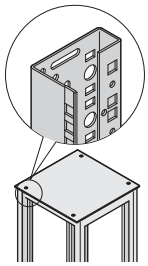

01004112

St, 1.75 mm; reduced-width adapter bracket required for 800 mm width; depth members are required for partial-height mounting

U height identification for 19" panel/ slide mount

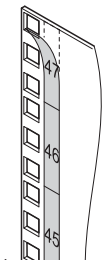

00505050

paper strip, white, serial numbered from 1 ... 47 H

19" assembly kit M6

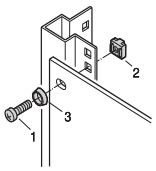

sc128

assembly kit: item 1: screws, item 2: cage nuts, item 3: washers

Adapter bracket for reduced width

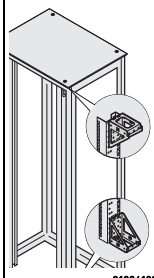

01004128

St, 2 mm, finish AlZn, for fixing the 19" panel/slide mounts in 800 mm wide cabinets

No.	Cabinet dimensions Height U	Height mm	Width mm	Depth mm	x_f mm	c mm	PU 1 pair assembled	PU 1 pair assembled	PU 4 pieces assembled	PU 50 pieces supplied loose	PU 4 pieces assembled
Completely in RAL 7021							RAL 7021	AlZn			AlZn
1	29	1400	600	600	50	500	23130-012	23130-032	25127-997	21101-809	–
2	29	1400	600	800	50	700					
3	33	1600	600	600	50	500	23130-013	23130-033	25127-997	21101-809	–
4	33	1600	600	800	50	700					
5	38	1800	600	600	50	500	23130-014	23130-034	25127-997	21101-809	–
6	38	1800	600	800	50	700					
7	38	1800	800	600	50	500	23130-014	23130-034	25127-997	21101-809	23130-091
8	42	2000	600	300	50	200	23130-015	23130-035	25127-997	21101-809	–
9	42	2000	600	600	50	500	23130-015	23130-035	25127-997	21101-809	–
10	42	2000	600	800	50	700					
11	42	2000	800	600	50	500	23130-015	23130-035	25127-997	21101-809	23130-091
12	42	2000	800	800	150	500					
13	47	2200	600	300	50	200	23130-016	23130-036	25127-997	21101-809	–
14	47	2200	600	600	50	500	23130-016	23130-036	25127-997	21101-809	–
15	47	2200	600	800	50	700					
16	47	2200	800	800	150	500	23130-016	23130-036	25127-997	21101-809	23130-091
Colour combinations							RAL 7035	AlZn			AlZn
17	29	1400	600	600	50	500	23130-022	23130-032	25127-997	21101-809	–
18	29	1400	600	800	50	700					
19	33	1600	600	600	50	500	23130-023	23130-033	25127-997	21101-809	–
20	33	1600	600	800	50	700					
21	38	1800	600	600	50	500	23130-024	23130-034	25127-997	21101-809	–
22	38	1800	600	800	50	700					
23	38	1800	800	600	50	500	23130-024	23130-034	25127-997	21101-809	23130-091
24	42	2000	600	300	50	200	23130-025	23130-035	25127-997	21101-809	–
25	42	2000	600	600	50	500	23130-025	23130-035	25127-997	21101-809	–
26	42	2000	600	800	50	700					
27	42	2000	800	600	50	500	23130-025	23130-035	25127-997	21101-809	23130-091
28	42	2000	800	800	150	500					
29	47	2200	600	300	50	200	23130-026	23130-036	25127-997	21101-809	–
30	47	2200	600	600	50	500	23130-026	23130-036	25127-997	21101-809	–
31	47	2200	600	800	50	700					
32	47	2200	800	800	150	500	23130-026	23130-036	25127-997	21101-809	23130-091

Cabinets – Varistar Elektronics ServicePLUS

Interior mounting ETSI panel/slide mounts

Order Information

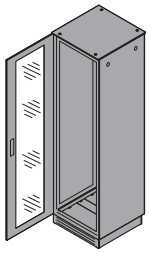

Completely in RAL 7021 (black grey)

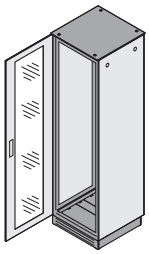

Colour combination RAL 7035 (light grey)/ RAL 7021 (black grey)

					ETSI panel/slide mount	
					Dimensions	Panel/slide mount
					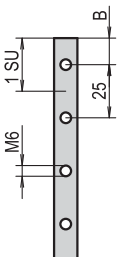 coa43693	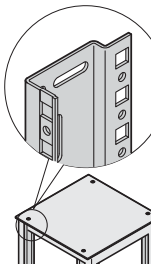 01004114
					in accordance with ETS 300119-3 and IEC 60917-211; SU = 25 mm	St, 2 mm, Al-Zn finish, suitable only for Slim-Line frame; shelves available on request
	Cabinet dimensions					
	Height		Width	Depth	Height	PU 1 pair
No.	U	mm	mm	mm	SU	assembled
Completely in RAL 7021						AlZn
1	29	1400	600	600	50	23130-052
2	29	1400	600	800	50	
3	33	1600	600	600	60	23130-053
4	33	1600	600	800	60	
5	38	1800	600	600	68	23130-054
6	38	1800	600	800	68	
7	38	1800	800	600	68	23130-054
8	42	2000	600	300	76	23130-055
9	42	2000	600	600	76	23130-055
10	42	2000	600	800	76	
11	42	2000	800	600	76	23130-055
12	42	2000	800	800	76	
13	47	2200	600	300	84	23130-056
14	47	2200	600	600	84	23130-056
15	47	2200	600	800	84	
16	47	2200	800	800	84	23130-056
Colour combinations						AlZn
17	29	1400	600	600	50	23130-052
18	29	1400	600	800	50	
19	33	1600	600	600	60	23130-053
20	33	1600	600	800	60	
21	38	1800	600	600	68	23130-054
22	38	1800	600	800	68	
23	38	1800	800	600	68	23130-054
24	42	2000	600	300	76	23130-055
25	42	2000	600	600	76	23130-055
26	42	2000	600	800	76	
27	42	2000	800	600	76	23130-055
28	42	2000	800	800	76	
29	47	2200	600	300	84	23130-056
30	47	2200	600	600	84	23130-056
31	47	2200	600	800	84	
32	47	2200	800	800	84	23130-056

Cabinets – Varistar Elektronics ServicePLUS

Interior mounting Swing frames for cabinet width 600 mm

Order Information

			Swing frame	Stop 120°	Safety lock	Spare key
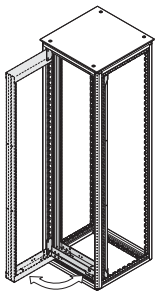			01005070	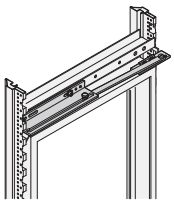 01005061	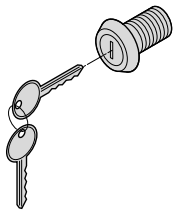 01015060	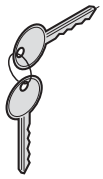 01015059
			St, 2 mm, RAL 7021, load-carrying capacity: 150 kg, 120° hinge, square locks incl. 2 keys (Dimension drawings link)	St; for safety reasons a swing frame stop is recommended	for swing frame, instead of square lock, incl. 2 keys	
Height U	Usable height U	Width mm	1 piece assembled	PU 1 kit assembled	1 piece assembled	PU 2 pieces supplied loose
partial height	12	600	21130-740	23130-158	**60113-267**	**60220-003**
partial height	21	600	21130-741	23130-158	**60113-267**	**60220-003**
29	25	600	21130-742	23130-158	**60113-267**	**60220-003**
33	30	600	21130-743	23130-158	**60113-267**	**60220-003**
38	34	600	21130-744	23130-158	**60113-267**	**60220-003**
42	39	600	21130-745	23130-158	**60113-267**	**60220-003**
47	43	600	21130-746	23130-158	**60113-267**	**60220-003**

Interior mounting Swing frames for cabinet width 800 mm

Order Information

			Swing frame 120°		Swing frame 160°		Swing frame trim		Safety lock
			Swing frame 120°	Stop 120°	Swing frame 160°	Stop 160°	Asymmetrical assembly	Symmetrical assembly	
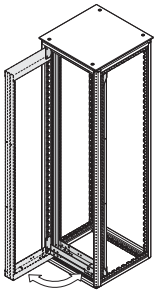			01005070	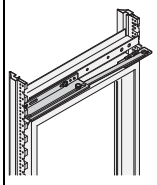 01005061	01005070	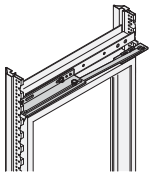 01005061	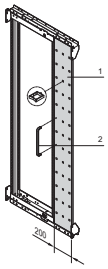 01005058	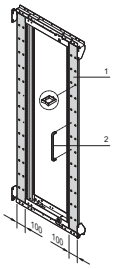 01005057	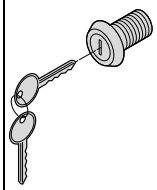 01015060
			St, 2 mm, RAL 7021, load-carrying capacity 150 kg, 120° hinge, square locks incl. 2 keys (Dimension drawings link)	St; for safety reasons a swing frame stop is recommended	St, 2 mm, RAL 7021, load-carrying capacity 150 kg, 160° hinge, square locks incl. 2 keys	St, swing frame stop is recommended for safety reasons	St, 1.5 mm, RAL 7021, trim (item 1, width 200 mm) incl. handle (item 2) and cut-out for cable eyes	St, 1.5 mm, RAL 7021, trim (item 1, 2 x width 100 mm) incl. handle (item 2) and cut-out for cable eyes	for swing frame, instead of square lock, incl. 2 keys
Height U	Usable height U	Width mm	1 piece assembled	PU 1 kit assembled	1 piece assembled	PU 1 kit assembled	1 piece assembled	PU 2 pieces assembled	1 piece assembled
partial height	12	800	21130-747	23130-158	21130-761	23130-159	–	–	**60113-267**
partial height	21	800	21130-748	23130-158	21130-762	23130-159	21130-432	21130-442	**60113-267**
29	25	800	21130-749	23130-158	21130-763	23130-159	21130-433	21130-443	**60113-267**
33	30	800	21130-750	23130-158	21130-764	23130-159	21130-434	21130-444	**60113-267**
38	34	800	21130-751	23130-158	21130-765	23130-159	21130-435	21130-445	**60113-267**
42	39	800	21130-752	23130-158	21130-766	23130-159	21130-436	21130-446	**60113-267**
47	43	800	21130-753	23130-158	21130-767	23130-159	21130-437	21130-447	**60113-267**

Cabinets – Varistar Elektronics ServicePLUS

Interior mounting Mounting plate, stationary shelves, 75 kg

Order Information

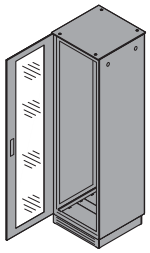

Completely in RAL 7021 (black grey)

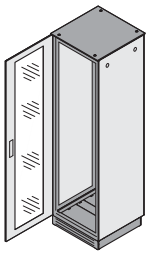

Colour combination RAL 7035 (light grey)/ RAL 7021 (black grey)

	Cabinet dimensions				Mounting plate			Stationary shelf	Stationary shelf	
					Full height	Height 1200 mm	Strengthening brackets	Full depth	Shortened by 100 mm	Depth member, 3 rows
					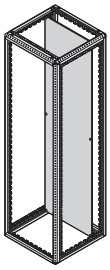 01008052	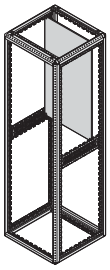 01008053	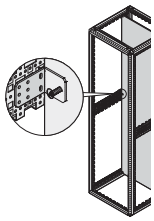 01008080	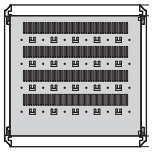 01004142	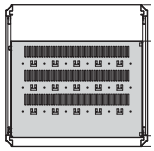 01004142	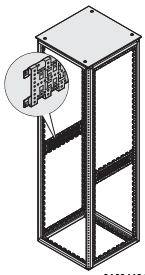 01004126
					St, zinc-plated, 3 mm, static load-carrying capacity up to 450 kg (rear mounted); strengthening bracket increases static load-carrying capacity; please order separately		St profile, increases static load-carrying capacity of mounting plate to 150 kg	St, 1.5 mm, static load-carrying capacity 75 kg, 1 U, incl. GND/ earthing	St, 1.5 mm, static load-carrying cap. 75 kg, 1 U, depth 479 mm, incl. GND/ earthing, for recessed installation order depth members	length 460 mm, St, 1.5 mm, finish AlZn; required for recessed shelf
No.	Height U	Height mm	Width mm	Depth mm	1 piece assembled	1 piece assembled	PU 2 pieces assembled	1 piece assembled	1 piece assembled	PU 1 pair assembled
Completely in RAL 7021					zinc-plated	zinc-plated	RAL 7021	RAL 7021	RAL 7021	AlZn
1	29	1400	600	600	–	23130-413	23130-418	**21130-323**	21130-322	**23130-081**
2	29	1400	600	800				21130-325	**21130-324**	**23130-082**
3	33	1600	600	600	–	23130-413	23130-418	**21130-323**	21130-322	**23130-081**
4	33	1600	600	800				21130-325	**21130-324**	**23130-082**
5	38	1800	600	600	23130-405	23130-413	23130-418	**21130-323**	21130-322	**23130-081**
6	38	1800	600	800				21130-325	**21130-324**	**23130-082**
7	38	1800	800	600	23130-406	23130-414	23130-418	21130-333	21130-332	**23130-081**
8	42	2000	600	300	23130-407	23130-413	23130-418	–	–	–
9	42	2000	600	600	23130-407	23130-413	23130-418	**21130-323**	21130-322	**23130-081**
10	42	2000	600	800				21130-325	**21130-324**	**23130-082**
11	42	2000	800	600	23130-408	23130-414	23130-418	21130-333	21130-332	**23130-081**
12	42	2000	800	800				**21130-335**	**21130-334**	**23130-082**
13	47	2200	600	300	–	23130-413	23130-418	–	–	–
14	47	2200	600	600	–	23130-413	23130-418	**21130-323**	21130-322	**23130-081**
15	47	2200	600	800				21130-325	**21130-324**	**23130-082**
16	47	2200	800	800	–	23130-414	23130-418	**21130-335**	**21130-334**	**23130-082**
Colour combinations					zinc-plated	zinc-plated	RAL 7021	RAL 7035	RAL 7035	AlZn
17	29	1400	600	600	–	23130-413	23130-418	**22130-323**	22130-322	**23130-081**
18	29	1400	600	800				22130-325	**22130-324**	**23130-082**
19	33	1600	600	600	–	23130-413	23130-418	**22130-323**	22130-322	**23130-081**
20	33	1600	600	800				22130-325	**22130-324**	**23130-082**
21	38	1800	600	600	23130-405	23130-413	23130-418	**22130-323**	22130-322	**23130-081**
22	38	1800	600	800				22130-325	**22130-324**	**23130-082**
23	38	1800	800	600	23130-406	23130-414	23130-418	22130-333	22130-332	**23130-081**
24	42	2000	600	300	23130-407	23130-413	23130-418	–	–	–
25	42	2000	600	600	23130-407	23130-413	23130-418	**22130-323**	22130-322	**23130-081**
26	42	2000	600	800				22130-325	**22130-324**	**23130-082**
27	42	2000	800	600	23130-408	23130-414	23130-418	22130-333	22130-332	**23130-081**
28	42	2000	800	800				**22130-335**	**22130-324**	**23130-082**
29	47	2200	600	300	–	23130-413	23130-418	–	–	–
30	47	2200	600	600	–	23130-413	23130-418	**22130-323**	22130-322	**23130-081**
31	47	2200	600	800				22130-325	22130-324	**23130-082**
32	47	2200	800	800	–	23130-414	23130-418	**22130-335**	22130-334	**23130-082**

Interior mounting Telescopic shelves, 70 kg

Order Information

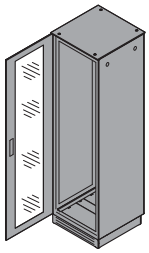

Completely in RAL 7021 (black grey)

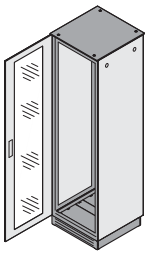

Colour combination RAL 7035 (light grey)/ RAL 7021 (black grey)

		Telescopic shelf, 2 U				
		Full depth	Shortened by 100 mm	Mounting bracket	T-bar lock	GND/earthing
		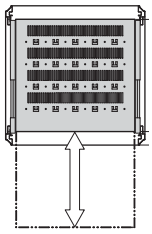 01004144	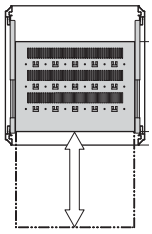 01004145	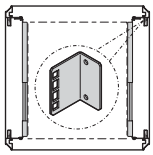 01005054	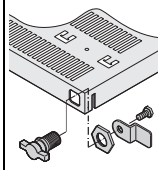 01004125	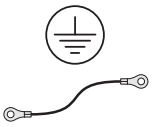 05904052
		St, 1.5 mm, static load-carrying capacity 70/50 kg (width 600/ 800 mm), incl. telescopic slide, please order mounting bracket separately	St, 1.5 mm, static load-carrying capacity 70/50 kg (width 600/ 800 mm), incl. telescopic slide, please order mounting bracket separately	St, finish AlZn	to lock the telescopic shelf	for telescopic shelf
	Cabinet dimensions					
No.	Height U / mm; Width mm; Depth mm	1 piece assembled	1 piece assembled	PU 4 pieces assembled	1 piece assembled	PU 1 kit assembled
	Completely in RAL 7021	RAL 7021	RAL 7021	AlZn		
1	29 / 1400; 600; 600	21130-353	21130-352	23130-274	23130-092	23130-140
2	29 / 1400; 600; 800	21130-355	21130-354			
3	33 / 1600; 600; 600	21130-353	21130-352	23130-274	23130-092	23130-140
4	33 / 1600; 600; 800	21130-355	21130-354			
5	38 / 1800; 600; 600	21130-353	21130-352	23130-274	23130-092	23130-140
6	38 / 1800; 600; 800	21130-355	21130-354			
7	38 / 1800; 800; 600	21130-373	21130-372	23130-274	23130-092	23130-140
8	42 / 2000; 600; 300	–	–	–	–	–
9	42 / 2000; 600; 600	21130-353	21130-352	23130-274	23130-092	23130-140
10	42 / 2000; 600; 800	21130-355	21130-354			
11	42 / 2000; 800; 600	21130-373	21130-372	23130-274	23130-092	23130-140
12	42 / 2000; 800; 800	21130-375	21130-374			
13	47 / 2200; 600; 300	–	–	–	–	–
14	47 / 2200; 600; 600	21130-353	21130-352	23130-274	23130-092	23130-140
15	47 / 2200; 600; 800	21130-355	21130-354			
16	47 / 2200; 800; 800	21130-375	21130-374	23130-274	23130-092	23130-140
	Colour combinations	RAL 7035	RAL 7035	AlZn		RAL 7021
17	29 / 1400; 600; 600	22130-353	22130-352	23130-274	23130-092	23130-140
18	29 / 1400; 600; 800	22130-355	22130-354			
19	33 / 1600; 600; 600	22130-353	22130-352	23130-274	23130-092	23130-140
20	33 / 1600; 600; 800	22130-355	22130-354			
21	38 / 1800; 600; 600	22130-353	22130-352	23130-274	23130-092	23130-140
22	38 / 1800; 600; 800	22130-355	22130-354			
23	38 / 1800; 800; 600	22130-373	22130-372	23130-274	23130-092	23130-140
24	42 / 2000; 600; 300	–	–	–	–	–
25	42 / 2000; 600; 600	22130-353	22130-352	23130-274	23130-092	23130-140
26	42 / 2000; 600; 800	22130-355	22130-354			
27	42 / 2000; 800; 600	22130-373	22130-372	23130-274	23130-092	23130-140
28	42 / 2000; 800; 800	22130-375	22130-374			
29	47 / 2200; 600; 300	–	–	–	–	–
30	47 / 2200; 600; 600	22130-353	22130-352	23130-274	23130-092	23130-140
31	47 / 2200; 600; 800	22130-355	22130-354			
32	47 / 2200; 800; 800	22130-375	22130-374	23130-274	23130-092	23130-140

Cabinets – Varistar Elektronics ServicePLUS

Interior mounting 19" shelves 1 U, stationary 75 kg, telescopic 30 kg

Order Information

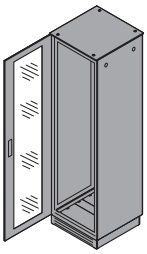

Completely in RAL 7021 (black grey)

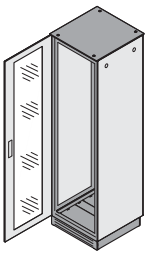

Colour combination RAL 7035 (light grey)/ RAL 7021 (black grey)

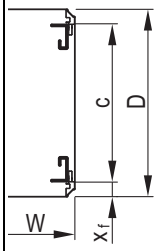

01004146

x_f = distance from front
c = pitch of 19" panel/slide mounts
D = cabinet depth
W = cabinet width

19" stationary shelf, 1 U, 75 kg

Full depth

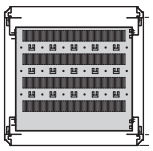

01004118

St, 1.5 mm, static load-carrying capacity 75 kg, depth 600 mm, incl. GND/ earthing

Shortened by 100 mm

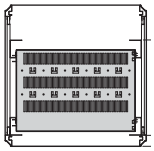

01004119

St, 1.5 mm, static load-carrying capacity 75 kg, depth 500 mm, incl. GND/ earthing

19" telescopic shelf, 1 U, 30 kg

Full depth

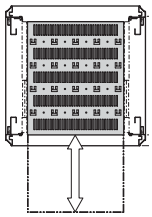

01004123

St, 1.5 mm, static load-carrying capacity 30 kg, incl. telescopic slide; please order GND/earthing kit separately

Shortened by 100 mm

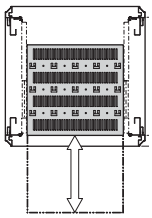

01004122

St, 1.5 mm, static load-carrying capacity 30 kg, incl. telescopic slide; please order GND/earthing kit separately

GND/earthing

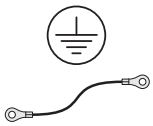

05904052

for telescopic shelf

No.	Cabinet dimensions Height U	mm	Width mm	Depth mm	x_f mm	c mm	19" stationary shelf, 1 U, 75 kg, Full depth, 1 piece assembled	19" stationary shelf, 1 U, 75 kg, Shortened by 100 mm, 1 piece assembled	19" telescopic shelf, 1 U, 30 kg, Full depth, 1 piece assembled	19" telescopic shelf, 1 U, 30 kg, Shortened by 100 mm, 1 piece assembled	GND/earthing, PU 1 kit assembled
Completely in RAL 7021							RAL 7021	RAL 7021	RAL 7021	RAL 7021	
1	29	1400	600	600	50	500	**21130-303**	**21130-302**	**21130-343**	**21130-342**	**23130-140**
2	29	1400	600	800	50	700	**21130-305**	**21130-304**	**21130-345**	**21130-344**	
3	33	1600	600	600	50	500	**21130-303**	**21130-302**	**21130-343**	**21130-342**	**23130-140**
4	33	1600	600	800	50	700	**21130-305**	**21130-304**	**21130-345**	**21130-344**	
5	38	1800	600	600	50	500	**21130-303**	**21130-302**	**21130-343**	**21130-342**	**23130-140**
6	38	1800	600	800	50	700	**21130-305**	**21130-304**	**21130-345**	**21130-344**	
7	38	1800	800	600	50	500	**21130-303**	**21130-302**	**21130-343**	**21130-342**	**23130-140**
8	42	2000	600	300	50	200	–	–	–	–	–
9	42	2000	600	600	50	500	**21130-303**	**21130-302**	**21130-343**	**21130-342**	**23130-140**
10	42	2000	600	800	50	700	**21130-305**	**21130-304**	**21130-345**	**21130-344**	
11	42	2000	800	600	50	500	**21130-303**	**21130-302**	**21130-343**	**21130-342**	**23130-140**
12	42	2000	800	800	150	500	**21130-303**	**21130-302**	**21130-343**	**21130-342**	
13	47	2200	600	300	50	200	–	–	–	–	–
14	47	2200	600	600	50	500	**21130-303**	**21130-302**	**21130-343**	**21130-342**	**23130-140**
15	47	2200	600	800	50	700	**21130-305**	**21130-304**	**21130-345**	**21130-344**	
16	47	2200	800	800	150	500	**21130-303**	**21130-302**	**21130-343**	**21130-342**	**23130-140**
Colour combinations							RAL 7035	RAL 7035	RAL 7035	RAL 7035	
17	29	1400	600	600	50	500	**22130-303**	**22130-302**	**22130-343**	**22130-342**	**23130-140**
18	29	1400	600	800	50	700	**22130-305**	**22130-304**	**22130-345**	**22130-344**	
19	33	1600	600	600	50	500	**22130-303**	**22130-302**	**22130-343**	**22130-342**	**23130-140**
20	33	1600	600	800	50	700	**22130-305**	**22130-304**	**22130-345**	**22130-344**	
21	38	1800	600	600	50	500	**22130-303**	**22130-302**	**22130-343**	**22130-342**	**23130-140**
22	38	1800	600	800	50	700	**22130-305**	**22130-304**	**22130-345**	**22130-344**	
23	38	1800	800	600	50	500	**22130-303**	**22130-302**	**22130-343**	**22130-342**	**23130-140**
24	42	2000	600	300	50	200	–	–	–	–	–
25	42	2000	600	600	50	500	**22130-303**	**22130-302**	**22130-343**	**22130-342**	**23130-140**
26	42	2000	600	800	50	700	**22130-305**	**22130-304**	**22130-345**	**22130-344**	
27	42	2000	800	600	50	500	**22130-303**	**22130-302**	**22130-343**	**22130-342**	**23130-140**
28	42	2000	800	800	150	500	**22130-303**	**22130-302**	**22130-343**	**22130-342**	
29	47	2200	600	300	50	200	–	–	–	–	–
30	47	2200	600	600	50	500	**22130-303**	**22130-302**	**22130-343**	**22130-342**	**23130-140**
31	47	2200	600	800	50	700	**22130-305**	**22130-304**	**22130-345**	**22130-344**	
32	47	2200	800	800	150	500	**22130-303**	**22130-302**	**22130-343**	**22130-342**	**23130-140**

Cabinets – Varistar Elektronics ServicePLUS

Interior mounting 19" telescopic shelf, 2 U, 70 kg

Order Information

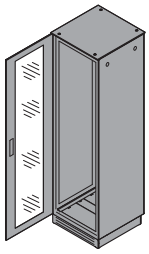

Completely in RAL 7021 (black grey)

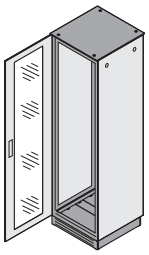

Colour combination RAL 7035 (light grey)/ RAL 7021 (black grey)

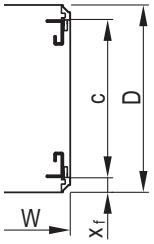

01004146

x_f = distance from front
c = pitch of 19" panel/slide mounts
D = cabinet depth
W = cabinet width

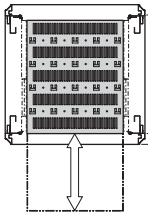

01004123

St, 1.5 mm, RAL 7021, static load-carrying capacity 70 kg, width 417 mm, depth 482 mm, incl. telescopic slide, please order, T-bar lock and earthing kit separately

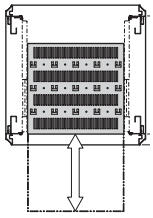

01004122

St, 1.5 mm, RAL 7021, static load-carrying capacity 70 kg, width 400 mm, depth 682 mm, incl. telescopic slide, please order, T-bar lock and earthing kit separately

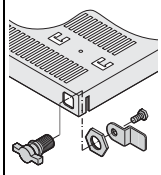

01004125

to lock the telescopic shelf

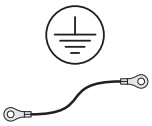

05904052

for telescopic shelf

	Cabinet dimensions				Dimension Standard fitting		Telescopic shelf, 2 U, 70 kg			
							Full depth	Shortened by 100 mm	T-bar lock	GND/earthing
No.	Height U	Height mm	Width mm	Depth mm	x_f mm	c mm	1 piece assembled	1 piece assembled	1 piece assembled	PU 1 kit assembled
	Completely in RAL 7021						RAL 7021	RAL 7021		
1	29	1400	600	600	50	500	21130-353	21130-352	23130-092	23130-140
2	29	1400	600	800	50	700	21130-355	21130-354		
3	33	1600	600	600	50	500	21130-353	21130-352	23130-092	23130-140
4	33	1600	600	800	50	700	21130-355	21130-354		
5	38	1800	600	600	50	500	21130-353	21130-352	23130-092	23130-140
6	38	1800	600	800	50	700	21130-355	21130-354		
7	38	1800	800	600	50	500	21130-353	21130-352	23130-092	23130-140
8	42	2000	600	300	50	200	–	–	–	–
9	42	2000	600	600	50	500	21130-353	21130-352	23130-092	23130-140
10	42	2000	600	800	50	700	21130-355	21130-354		
11	42	2000	800	600	50	500	21130-353	21130-352	23130-092	23130-140
12	42	2000	800	800	150	500	21130-353	21130-352		
13	47	2200	600	300	50	200	–	–	–	–
14	47	2200	600	600	50	500	21130-353	21130-352	23130-092	23130-140
15	47	2200	600	800	50	700	21130-355	21130-354		
16	47	2200	800	800	150	500	21130-353	21130-352	23130-092	23130-140
	Colour combinations						RAL 7035	RAL 7035		
17	29	1400	600	600	50	500	22130-353	22130-352	23130-092	23130-140
18	29	1400	600	800	50	700	22130-355	22130-354		
19	33	1600	600	600	50	500	22130-353	22130-352	23130-092	23130-140
20	33	1600	600	800	50	700	22130-355	22130-354		
21	38	1800	600	600	50	500	22130-353	22130-352	23130-092	23130-140
22	38	1800	600	800	50	700	22130-355	22130-354		
23	38	1800	800	600	50	500	22130-353	22130-352	23130-092	23130-140
24	42	2000	600	300	50	200	–	–	–	–
25	42	2000	600	600	50	500	22130-353	22130-352	23130-092	23130-140
26	42	2000	600	800	50	700	22130-355	22130-354		
27	42	2000	800	600	50	500	22130-353	22130-352	23130-092	23130-140
28	42	2000	800	800	150	500	22130-353	22130-352		
29	47	2200	600	300	50	200	–	–	–	–
30	47	2200	600	600	50	500	22130-353	22130-352	23130-092	23130-140
31	47	2200	600	800	50	700	22130-355	22130-354		
32	47	2200	800	800	150	500	22130-353	22130-352	23130-092	23130-140

Cabinets – Varistar Elektronics ServicePLUS

Interior mounting Slide rails, depth members

Order Information

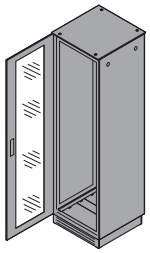

Completely in RAL 7021 (black grey)

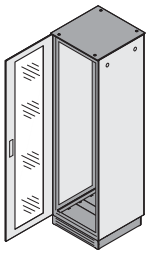

Colour combination RAL 7035 (light grey)/ RAL 7021 (black grey)

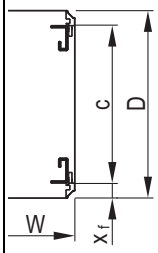

01004146

x_f = distance from front
c = pitch of 19" panel/slide mounts
D = cabinet depth
W = cabinet width

Slide rail

25 kg

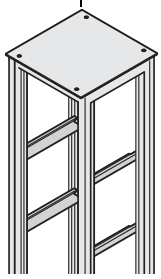

01004115

St, 1.5 mm, finish AlZn, static load-carrying capacity 25 kg/ pair

100 kg

St, 2.5 mm, zinc-plated, static load-carrying capacity 100 kg/ pair

Short slide rail

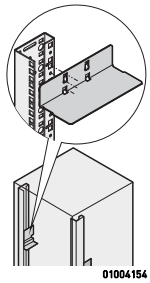

01004154

St, 1.5 mm, finish AlZn, static load-carrying capacity 15 kg/ pair

Depth member, 3 rows

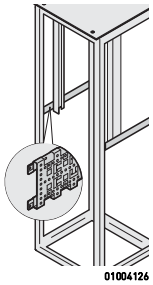

01004126

length 460 mm, St, 1.5 mm, finish AlZn; required for recessed shelf

No.	Cabinet dimensions Height U	Height mm	Width mm	Depth mm	x_f mm	c mm	PU 2 pieces supplied loose	PU 2 pieces supplied loose	PU 1 kit supplied loose	PU 1 pair assembled
Completely in RAL 7021							AlZn	zinc-plated	AlZn	AlZn
1	29	1400	600	600	50	500	23130-096	23130-118	23130-094	23130-081
2	29	1400	600	800	50	700	23130-097	23130-119		23130-082
3	33	1600	600	600	50	500	23130-096	23130-118	23130-094	23130-081
4	33	1600	600	800	50	700	23130-097	23130-119		23130-082
5	38	1800	600	600	50	500	23130-096	23130-118	23130-094	23130-081
6	38	1800	600	800	50	700	23130-097	23130-119		23130-082
7	38	1800	800	600	50	500	23130-096	23130-118	23130-094	23130-081
8	42	2000	600	300	50	200	23130-099	23130-116	23130-094	–
9	42	2000	600	600	50	500	23130-096	23130-118	23130-094	23130-081
10	42	2000	600	800	50	700	23130-097	23130-119		23130-082
11	42	2000	800	600	50	500	23130-096	23130-118	23130-094	23130-081
12	42	2000	800	800	150	500	23130-096	23130-118		23130-082
13	47	2200	600	300	50	200	23130-099	23130-116	23130-094	–
14	47	2200	600	600	50	500	23130-096	23130-118	23130-094	23130-081
15	47	2200	600	800	50	700	23130-097	23130-119		23130-082
16	47	2200	800	800	150	500	23130-096	23130-118	23130-094	23130-082
Colour combinations							AlZn	zinc-plated	AlZn	AlZn
17	29	1400	600	600	50	500	23130-096	23130-118	23130-094	23130-081
18	29	1400	600	800	50	700	23130-097	23130-119		23130-082
19	33	1600	600	600	50	500	23130-096	23130-118	23130-094	23130-081
20	33	1600	600	800	50	700	23130-097	23130-119		23130-082
21	38	1800	600	600	50	500	23130-096	23130-118	23130-094	23130-081
22	38	1800	600	800	50	700	23130-097	23130-119		23130-082
23	38	1800	800	600	50	500	23130-096	23130-118	23130-094	23130-081
24	42	2000	600	300	50	200	23130-099	23130-116	23130-094	–
25	42	2000	600	600	50	500	23130-096	23130-118	23130-094	23130-081
26	42	2000	600	800	50	700	23130-097	23130-119		23130-082
27	42	2000	800	600	50	500	23130-096	23130-118	23130-094	23130-081
28	42	2000	800	800	150	500	23130-096	23130-118		23130-082
29	47	2200	600	300	50	200	23130-099	23130-116	23130-094	–
30	47	2200	600	600	50	500	23130-096	23130-118	23130-094	23130-081
31	47	2200	600	800	50	700	23130-097	23130-119		23130-082
32	47	2200	800	800	150	500	23130-096	23130-118	23130-094	23130-082

Order Information

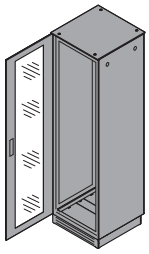

Completely in RAL 7021 (black grey)

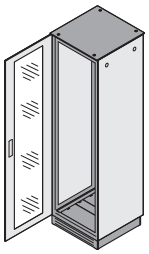

Colour combination RAL 7035 (light grey)/ RAL 7021 (black grey)

					Cable ducting with C-profile				
					C-rail for cabinet depth	C-rail for cabinet width	Slide nut	Cable shell	Cable support for C-rail
					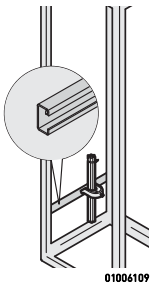 01006109	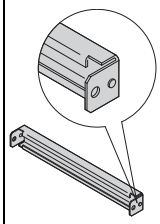 01006107	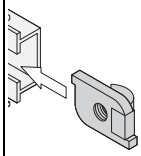 01504054	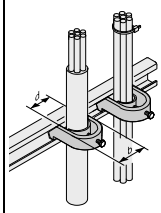 vnt009	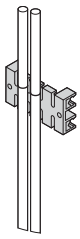 01006110
					St, 1.5 mm, finish AlZn	St, 1.5 mm, finish AlZn	for C-rail	for C-rail or for cable support rail, for cable bundles of 42 ... 46 mm, further dimensions see page 1.24	PA, UL 94 V-0, black, assembly by clipping onto the C-rail
	Cabinet dimensions								
No.	Height U	mm	Width mm	Depth mm	PU 2 pieces supplied loose	PU 2 pieces supplied loose	PU 10 pieces supplied loose	PU 10 pieces supplied loose	PU 5 pieces supplied loose
Completely in RAL 7021					AlZn	AlZn			
1	29	1400	600	600	23130-086	23130-333	21120-140	20114-731	60118-472
2	29	1400	600	800	23130-087				
3	33	1600	600	600	23130-086	23130-333	21120-140	20114-731	60118-472
4	33	1600	600	800	23130-087				
5	38	1800	600	600	23130-086	23130-333	21120-140	20114-731	60118-472
6	38	1800	600	800	23130-087				
7	38	1800	800	600	23130-086	23130-334	21120-140	20114-731	60118-472
8	42	2000	600	300	–	–	–	–	–
9	42	2000	600	600	23130-086	23130-333	21120-140	20114-731	60118-472
10	42	2000	600	800	23130-087				
11	42	2000	800	600	23130-086	23130-334	21120-140	20114-731	60118-472
12	42	2000	800	800	23130-087				
13	47	2200	600	300	–	–	–	–	–
14	47	2200	600	600	23130-086	23130-333	21120-140	20114-731	60118-472
15	47	2200	600	800	23130-087				
16	47	2200	800	800	23130-087	23130-334	21120-140	20114-731	60118-472
Colour combinations					AlZn	AlZn			
17	29	1400	600	600	23130-086	23130-333	21120-140	20114-731	60118-472
18	29	1400	600	800	23130-087				
19	33	1600	600	600	23130-086	23130-333	21120-140	20114-731	60118-472
20	33	1600	600	800	23130-087				
21	38	1800	600	600	23130-086	23130-333	21120-140	20114-731	60118-472
22	38	1800	600	800	23130-087				
23	38	1800	800	600	23130-086	23130-334	21120-140	20114-731	60118-472
24	42	2000	600	300	–	–	–	–	–
25	42	2000	600	600	23130-086	23130-333	21120-140	20114-731	60118-472
26	42	2000	600	800	23130-087				
27	42	2000	800	600	23130-086	23130-334	21120-140	20114-731	60118-472
28	42	2000	800	800	23130-087				
29	47	2200	600	300	–	–	–	–	–
30	47	2200	600	600	23130-086	23130-333	21120-140	20114-731	60118-472
31	47	2200	600	800					
32	47	2200	800	800	23130-087	23130-334	21120-140	20114-731	60118-472

Cabinets – Varistar Elektronics ServicePLUS

Interior mounting Cable ties, Velcro

Order Information

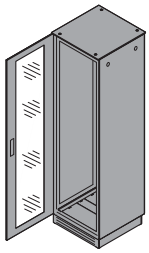

Completely in RAL 7021 (black grey)

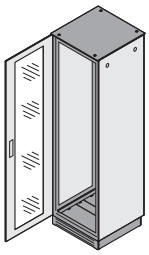

Colour combination RAL 7035 (light grey)/ RAL 7021 (black grey)

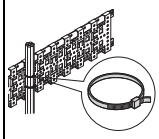

Cable tie 01005078: plastic, 92 mm x 2.5 mm, further dimensions see page 1.25

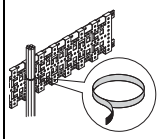

Velcro 01005079: black, length 300 mm, further dimensions see page 1.25

No.	Cabinet dimensions Height U	Height mm	Width mm	Depth mm	Cable tie PU 25 pieces supplied loose	Velcro PU 10 pieces supplied loose
Completely in RAL 7021						
1	29	1400	600	600	20118-351	20118-624
2	29	1400	600	800		
3	33	1600	600	600	20118-351	20118-624
4	33	1600	600	800		
5	38	1800	600	600	20118-351	20118-624
6	38	1800	600	800		
7	38	1800	800	600	20118-351	20118-624
8	42	2000	600	300	–	–
9	42	2000	600	600	20118-351	20118-624
10	42	2000	600	800		
11	42	2000	800	600	20118-351	20118-624
12	42	2000	800	800		
13	47	2200	600	300	–	–
14	47	2200	600	600	20118-351	20118-624
15	47	2200	600	800		
16	47	2200	800	800	20118-351	20118-624
Colour combinations						
17	29	1400	600	600	20118-351	20118-624
18	29	1400	600	800		
19	33	1600	600	600	20118-351	20118-624
20	33	1600	600	800		
21	38	1800	600	600	20118-351	20118-624
22	38	1800	600	800		
23	38	1800	800	600	20118-351	20118-624
24	42	2000	600	300	–	–
25	42	2000	600	600	20118-351	20118-624
26	42	2000	600	800		
27	42	2000	800	600	20118-351	20118-624
28	42	2000	800	800		
29	47	2200	600	300	–	–
30	47	2200	600	600	20118-351	20118-624
31	47	2200	600	800		
32	47	2200	800	800	20118-351	20118-624

General components

Mechanics

from page 3.2

Electrics

from page 3.29

Power distribution

from page 3.50

Climate control

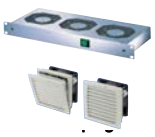

4.0

Cabinets – VARISTAR EMC

Content

Cabinets 1
Wall mounted cases 2
Accessories for cabinets and wall mounted cases . 3
Climate control . 4
Electronics cases 5
Subracks/ 19" chassis 6
Front panels, plug-in units . . . 7
Systems 8
Power supply units 9
Backplanes . . . 10
Connectors, front panel component system 11
Appendix 12

01008001

41003017

Cooling with perforated HF door with high air throughput (78 % open area)

01007004

Cooling with HF fan top cover for up to 6 fans

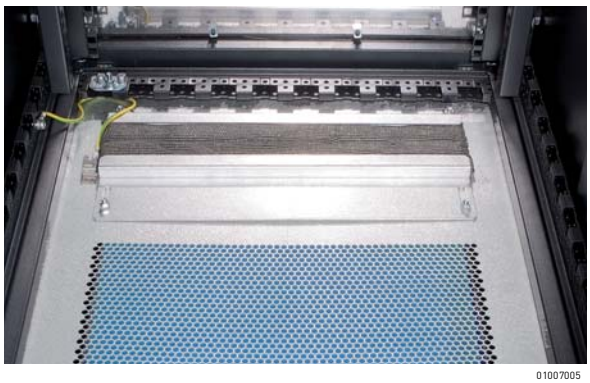

01007005

Cable entry in rear section of base plate; sealing by means of sliding plates

01007003

Cable entry by means of HF connection plate

Cabinets – VARISTAR EMC

Overview 1.54

Best performance in HF shielding

- Shielding up to 60 dB at 1 GHz, 40 dB at 3 GHz (tested to IEC 61587-3)
- Cable entry to front or rear or via base
- Cooling with perforated front door or with fan top cover
- Standard cabinets available from stock or individually configurable with appropriate accessory range

VARISTAR EMC

01005017

- Versions with/without cable entry through base plate
- IP 55

01007017

- With perforated HF front and rear door
- Base plate with cable ducting

01007018

- With fan top cover and perforated base plate with cable entry

30407004

ServicePLUS from page 1.68

e.g. individual configuration and assembly
e.g. modifications (cut-outs, special colours)
e.g. custom solutions (special sizes)

www.schroff.biz/ServicePLUS

VARISTAR Platform 1.4
Dimensions 1.8

VARISTAR EMC, base plate without cable ducting 1.55
VARISTAR EMC with perforated door 1.57
VARISTAR EMC with fan top cover 1.58

Accessories
Base/plinth 1.59
19" swing frame 1.60
19" panel/slide mount 1.61
19" fixing materials kit, M6 ..... 1.61
Slide rails 1.62
19" shelves 1.63
Depth members .. 1.66
C horizontal rail .. 1.66
Cable tie, Velcro 1.67

ServicePLUS .. 1.68
ServicePLUS configuration 1.69

VARISTAR Electronics 1.10
VARISTAR Seismic 1.84
VARISTAR Datacom and Networking Technology 1.124
VARISTAR air/water heat exchanger 1.224

VARISTAR EMC

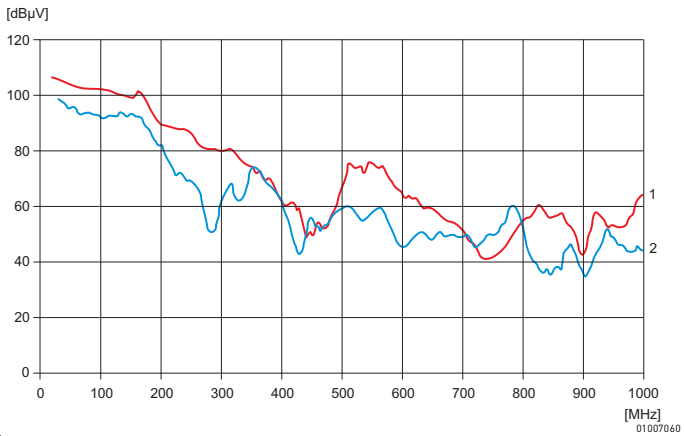

1) Shielding without cable ducting
2) Shielding with cable ducting,
tested to IEC 61587-3,
standard dimensions of test objects 2000 x 600 x 600 mm

ServicePLUS see page 1.68

- Shielding 60 dB at 1 GHz, 40 dB at 3 GHz (tested to IEC 61587-3)
- Type of protection IP 55
- Doors with 4-point locking and screw-fixed side panels
- Static load-carrying capacity 400 kg (Slim-Line)
- Base plate versions
  - without cable ducting
  - with cable ducting

Delivery comprises (assembled)

Item	Qty	Description
1	1	Welded basic frame, Slim-Line, St profile, RAL 7021, with textile gasket all-around
2	4	Adjustable foot, assembled
3	1	Flat top cover, St, inner surface AlZn, outside RAL 7021
4	1	Front door, St, inner surface AlZn, outside RAL 7035, 180° hinge, 4-point locking, lever handle
5	1	Rear door, St, inner surface AlZn, outside RAL 7035, 180° hinge, 4-point locking, lever handle
6	2	Side panel, screw-fixed, St, inner surface AlZn, outside RAL 7035
7a	1	Base plate, one-piece, St, 1.5 mm, finish AlZn
7b	1	Base plate with cable ducting, St, 1.5 mm, finish AlZn; cable entry to rear with conductive seal, 359 mm x 60 mm opening
8	2	19" panel/slide mount with EIA cut-outs, AlZn, assembled at front, depth-adjustable in 25 mm increments
9	1	GND/earthing kit, enclosed loose

Order Information

Height U	Height H mm	Width W mm	Depth D mm	Description	Part no.
42	2000	600	800	Base plate without cable entry	**10130-020**
42	2000	600	800	Base plate with cable entry	10130-192
Castors load-carrying capacity 400 kg, PS/St, PU 4 pieces, 2 locking, 2 non locking					**23130-077**
Castors with integrated adjustable feet load-carrying capacity 400 kg, PU 4 pieces					**23130-078**
DIN profile half cylinder, common locking for lever handle (1 key fits all locks) incl. 2 keys					**25127-995**
Lifting eye for top cover PU 4 pieces					**23130-072**

Note

- For more dimensions and versions see ServicePLUS configuration, from page 1.69
- Please order base/plinth separately, see page 1.59
- For assembly of shelves and slide rails another pair of panel/slide mounts is necessary, see page 1.61

Cabinets – VARISTAR EMC

VARISTAR EMC
with perforated doors

- Shielding 40 dB at 1 GHz (tested to IEC 61587-3)
- Air throughput 78 %
- Doors with 4-point locking and screw-fixed side panels
- Static load-carrying capacity 400 kg (Slim-Line)

Delivery comprises (assembled)

Item	Qty	Description
1	1	Welded basic frame, Slim-Line, St profile, RAL 7021, with textile gasket all around
2	4	Adjustable foot, assembled
3	1	Flat top cover, St, inner surface AlZn, outside RAL 7021
4	1	Front door, perforated, St, inner surface AlZn, outside RAL 7035, 180° hinge, 4-point locking, lever handle
5	1	Rear door, perforated, St, inner surface AlZn, outside RAL 7035, 180° hinge, 4-point locking, lever handle
6	2	Side panel, screw-fixed, St, inner surface AlZn, outside RAL 7035
7	1	Base plate with cable ducting, St, 1.5 mm, finish Al-Zn; cable entry to rear with conductive seal, 359 mm x 60 mm opening
8	2	19" panel/slide mount with EIA cut-outs, AlZn, assembled at front, depth-adjustable in 25 mm increments
9	1	GND/earthing kit, enclosed loose

Order Information

Height U	Height H mm	Width W mm	Depth D mm	Part no.
42	2000	600	800	10130-190
Castors load-carrying capacity 400 kg, PS/St, PU 4 pieces, 2 locking, 2 non locking				**23130-077**
Castors with integrated adjustable feet load-carrying capacity 400 kg, PU 4 pieces				**23130-078**
DIN profile half cylinder, common locking for lever handle (1 key fits all locks) incl. 2 keys				**25127-995**
Lifting eye for top cover PU 4 pieces				**23130-072**

Note

- For more dimensions and versions see ServicePLUS configuration, from page 1.69
- Please order base/plinth separately, see page 1.59
- For assembly of shelves and slide rails another pair of panel/slide mounts is necessary, see page 1.61

Perforation

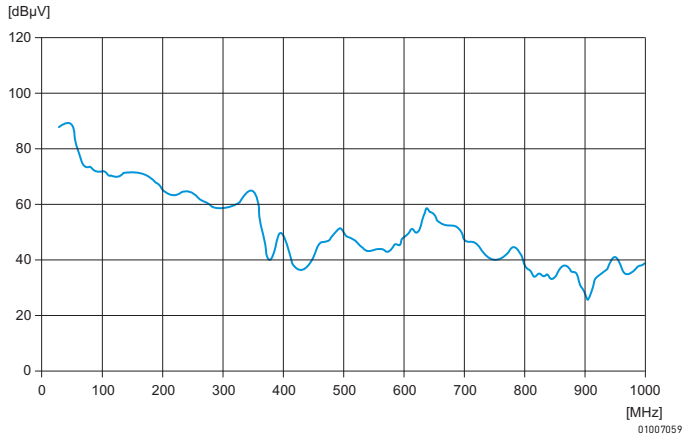

Shielding: Tested to IEC 61587-3,
standard dimensions of test object 2000 x 600 x 600 mm

ServicePLUS see page 1.68

VARISTAR EMC with fan top cover

01007018

01007004

Fan top cover

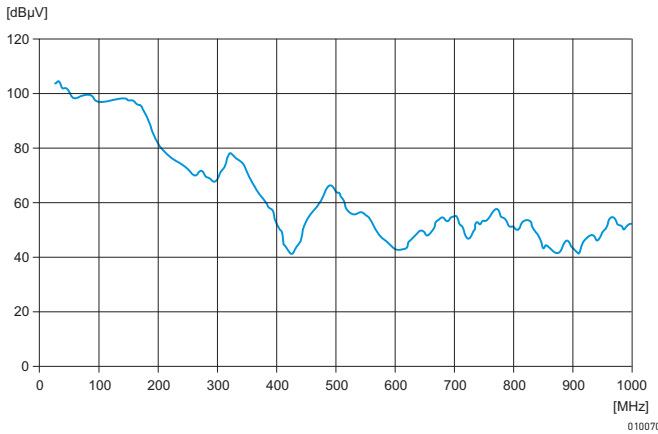

01007057

Shielding: Tested to IEC 61587-3,
standard dimensions of test object 2000 x 600 x 600 mm

ServicePLUS see page 1.68

- Shielding 50 dB at 1 GHz (tested to IEC 61587-3)
- Fan top cover with 3 fans (up to 6 fans can be mounted)
- Perforated base plate with cable ducting
- Doors with 4-point locking and screw-fixed side panels
- Static load-carrying capacity 400 kg (Slim-Line)

Delivery comprises (assembled)

Item	Qty	Description
1	1	Welded basic frame, Slim-Line, St profile, RAL 7021, with conductive seal all-around
2	4	Adjustable foot, assembled
3	1	Raised top cover, St, 1.5 mm, RAL 7021; fan top cover with 3 axial fans, 230 V_{AC}, incl. cabling and GND/ earthing; SCHUKO/UTE plug, cable length 2.5 m, IEC 60320-C13 socket; assembly space for 3 further fans
4	1	Front door, St, inner surface AlZn, outside RAL 7035, 180° hinge, 4-point locking, lever handle
5	1	Rear door, St, inner surface AlZn, outside RAL 7035, 180° hinge, 4-point locking, lever handle
6	2	Side panel, screw-fixed, St, inner surface AlZn, outside RAL 7035
7	1	Base plate with cable ducting, perforated, St, 1.5 mm, finish AlZn; cable entry to rear with conductive seal, 359 mm x 60 mm opening
8	2	19" panel/slide mount with EIA cut-outs, AlZn, assembled at front, depth-adjustable in 25 mm increments
9	1	GND/earthing kit, enclosed loose

Order Information

Height U	Height H mm	Width W mm	Depth D mm	Part no.
42	2000	600	800	10130-191
Castors load-carrying capacity 400 kg, PS/St, PU 4 pieces, 2 locking, 2 non locking				**23130-077**
Castors with integrated adjustable feet load-carrying capacity 400 kg, PU 4 pieces				**23130-078**
DIN profile half cylinder, common locking for lever handle (1 key fits all locks) incl. 2 keys				**25127-995**
Lifting eye for fan top PU 4 pieces				23130-090

Note

- For more dimensions and versions see ServicePLUS configuration, from page 1.69
- Please order base/plinth separately, see page 1.59
- For assembly of shelves and slide rails another pair of panel/ slide mounts is necessary, see page 1.61

Cabinets – VARISTAR EMC

Stationary base

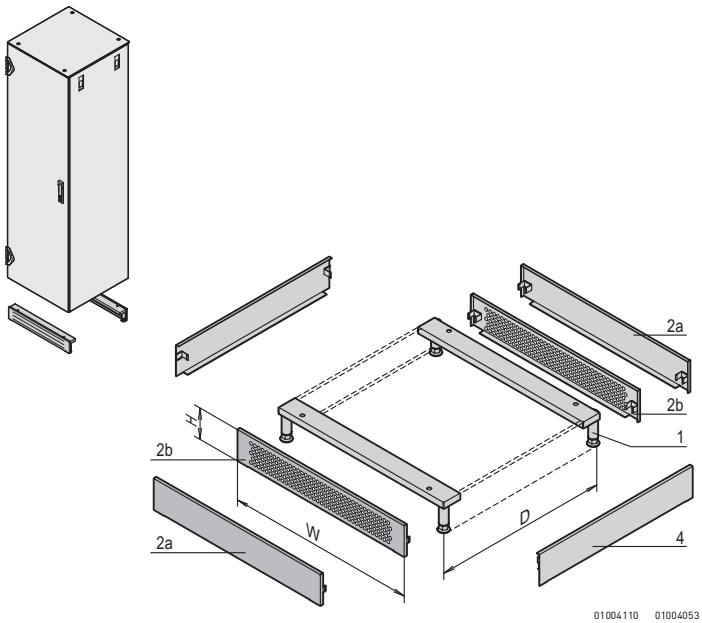

D = cabinet depth

- Static load-carrying capacity 1000 kg
- Removable trims allow cable entry from all sides
- Cannot be used in conjunction with castors
- Plinth height 100 mm, with feet adjustable from 112 to 132 mm
- Versions
  - Front/rear trim perforated
  - Front/rear trim solid

Delivery comprises (kit)

Item	Qty	Description
1	2	Support with feet, St, 3 mm
2a	2	Solid trim, St, 1.5 mm, RAL 7021
2b	2	Perforated trim, St, 1.5 mm, RAL 7021
3	1	Assembly kit

Order Information

For cabinet width W mm	Front/rear trim	Part no.
600	perforated	**23130-187**
600	solid	23130-387
Item 4 Side trim height 100 mm, depth 800 mm, PU 2 pieces		**23130-170**

Note

- Please order side trims (item 4) separately

Base/plinth, mobile

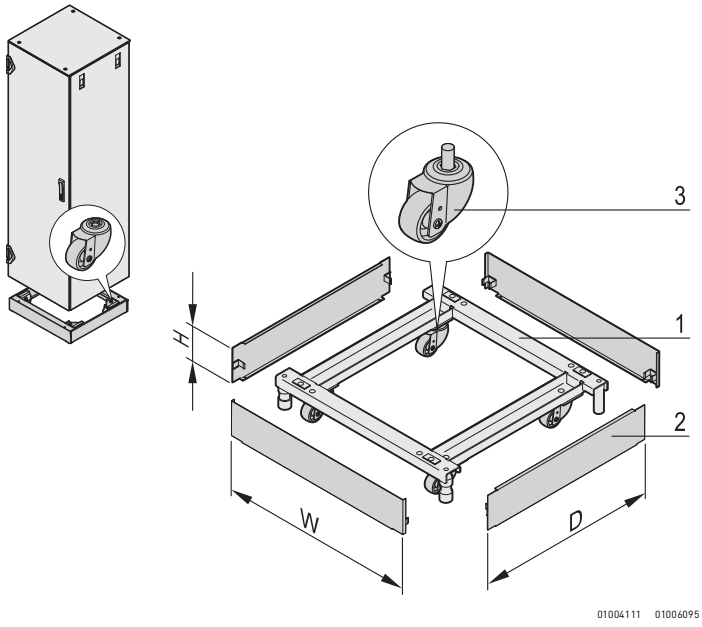

- Load-carrying capacity on castors 400 kg, on adjustable feet 1000 kg
- Plinth height H = 100 mm, with feet adjustable from 126 to 134 mm

Delivery comprises

Item	Qty	Description
1	1	Frame, St, 3 mm, RAL 7021, with adjustable feet
2	4	Trim, St, 1.5 mm, RAL 7021
3	4	Castor
4	1	Assembly kit

Order Information

For cabinet width mm	For cabinet depth mm	Part no.
600	800	**23130-209**

19" swing frame

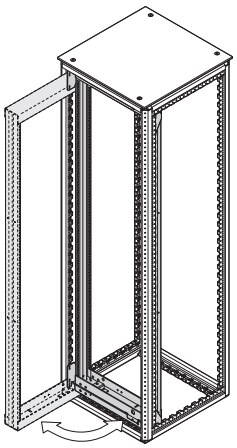

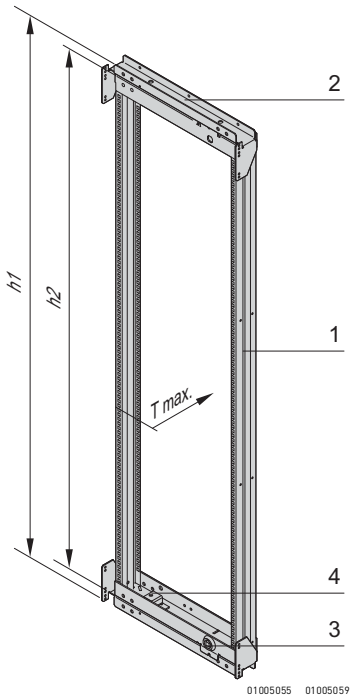

- Can accommodate 19" chassis and 19" subracks
- For full height or partial-height mounting within cabinets
- Pivot point can be selected right or left
- Load-carrying capacity 150 kg

Delivery comprises (kit)

Item	Qty	Description
1	1	Swing frame, St, 2 mm, RAL 7021
2	2	Support bar, St, 3 mm, RAL 7021
3	2	Square lock, 8 mm, incl. 2 keys
4	2	120° hinge
5	1	Assembly kit

Order Information

For cabinet height mm	Height h1 U	Height h2 U	Part no.
900 for partial-height mounting	16	12	21130-740
1200 for partial-height mounting	24	21	21130-741
1400 for partial-height mounting	29	25	21130-742
1600 for partial-height mounting	33	30	21130-743
1800 for partial-height mounting	38	34	21130-744
2000	42	39	21130-745
Swing frame stop max. swing angle 120°, St, zinc-plated, 1 piece			23130-158
Security lock to replace the square lock, PU 1 lock incl. 2 keys			**60113-267**
Spare key for security lock, 1 piece			**60220-003**

Maximum mounting depth for swing frame

Cabinet	Width 600 mm
Slim-Line	220 mm
Heavy-Duty	200 mm

Swing frame stop

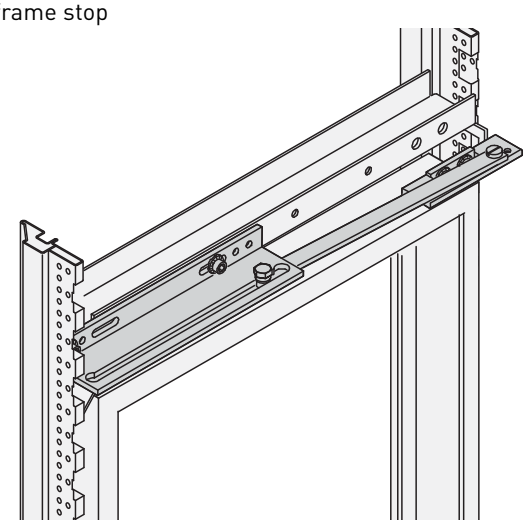

Security lock

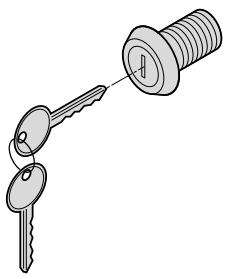

Note

- 19" swing frames can be assembled:
  - Directly on the cabinet frame
  - In 50 mm increments by aid of depth members (depth-adjustable)
- For partial-height mounting, depth members are necessary, see page 1.66

Cabinets – VARISTAR EMC

19" panel/slide mount with universal pitch (EIA)

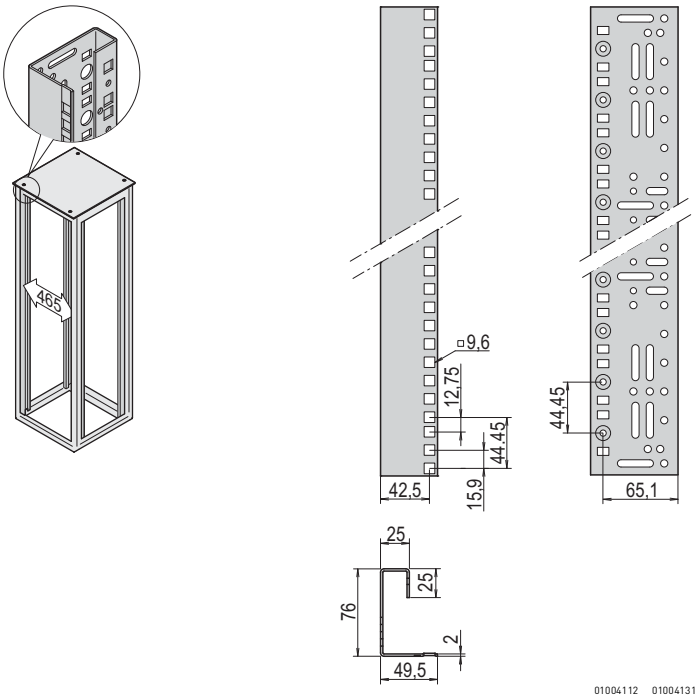

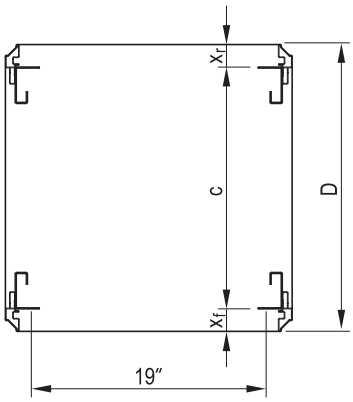

Standard assembly dimension $x_r = x_f = 50$ mm

- Assembly in 600 mm wide cabinets directly on the frame
- Depth-adjustable in 25 mm increments
- In accordance with IEC 60297-1 (DIN 41 494, part 1)

Delivery comprises

Item	Qty	Description
1	2	19" panel/slide mount, St, 1.75 mm, finish AlZn, RAL 7035 or RAL 7021
2	1	Assembly kit, incl. GND/earthing

Order Information

For cabinet height mm	Usable height U	Length mm	AlZn Part no.	RAL 7035 Part no.	RAL 7021 Part no.
Partial-height mounting	8	395	**23130-037**	**23130-027**	**23130-017**
	12	545	**23130-038**	**23130-028**	**23130-018**
	16	745	**23130-039**	**23130-029**	**23130-019**
	20	895	**23130-040**	**23130-030**	**23130-020**
	24	1095	**23130-031**	**23130-021**	**23130-011**
	29	1295	**23130-032**	**23130-022**	**23130-012**
	33	1495	**23130-033**	**23130-023**	**23130-013**
	38	1695	**23130-034**	**23130-024**	**23130-014**
2000	42	1895	**23130-035**	**23130-025**	**23130-015**

Dimensioning strip for 19" panel mounts, paper, white, serial numbered from 1 ... 47 U, PU 4 pieces — **25127-997**

Note

- For 19" partial-height mounting depth members are necessary
- Metric panel/slide mounts available on request

19" assembly kit, M6

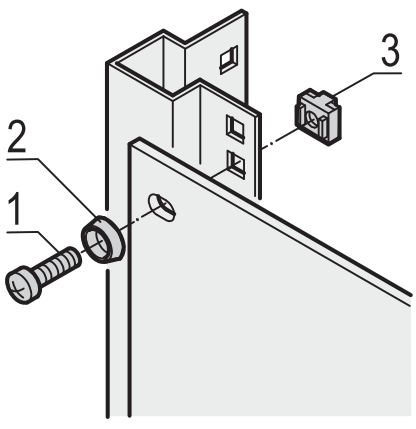

- For front panels, distribution fields and other components

Delivery comprises

Item	Description
1	Panhead screw, M6 x 16, St, zinc-plated
2	Plastic washer, black
3	Cage nut, M6, St, zinc-plated

Order Information

Description	Qty/PU	Part no.
19" assembly kit (screw, washer, nut)	50	**21101-809**
19" assembly kit (screw, washer, nut)	100	**21101-810**

Slide rails

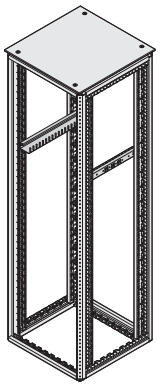

- For assembly on 19" panel/slide mounts
- Assembly in 1 U increments (snap-in, bolt-on)
- Wide support surface (48 mm)
- 2 versions
  - Static load-carrying capacity 25 kg per pair
  - Static load-carrying capacity 100 kg per pair

Delivery comprises

Item	Qty	Description
1	see Order information	Slide rail, AlZn, 1.5 mm (static load-carrying capacity 25 kg), or 2.5 mm (static load-carrying capacity 100 kg), zinc-plated
2	1	Assembly kit incl. GND/earthing

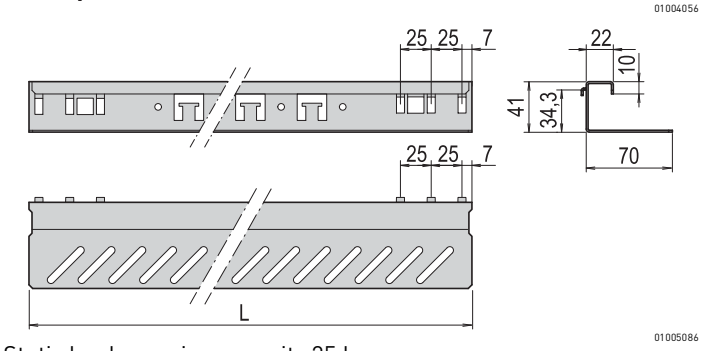

Static load-carrying capacity 25 kg

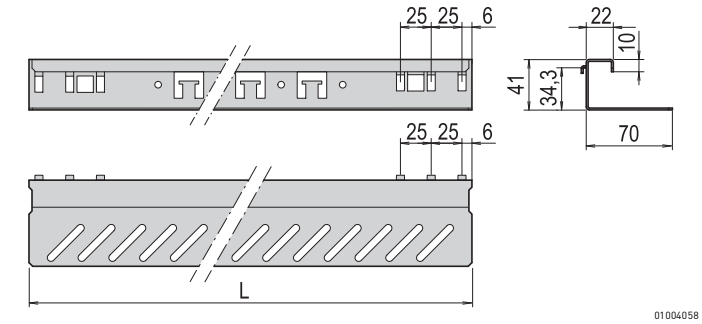

Static load-carrying capacity 100 kg

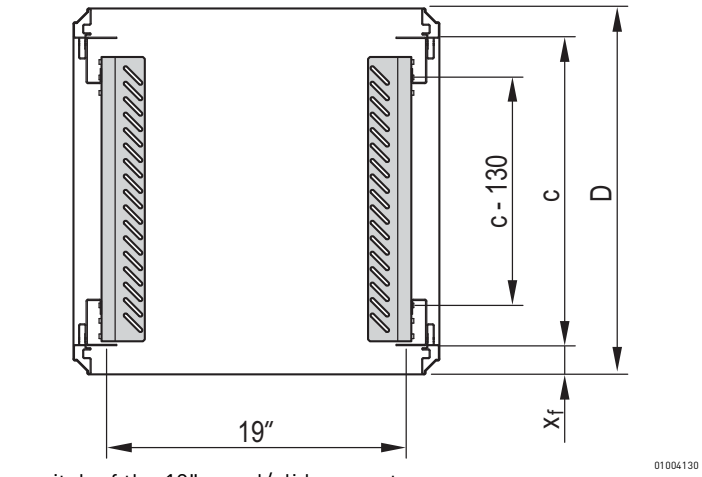

c = pitch of the 19" panel/slide mounts
x_f = standard dimension
D = cabinet depth

Order Information

Static load carrying capacity 25 kg

For cabinet depth D	x_f	c	Length L	Qty/PU	Part no.
mm	mm	mm	mm		
800	50	700	656	2	**23130-097**
800	50	700	656	10	**23130-102**

Order Information

Static load carrying capacity 100 kg

For cabinet depth D	x_f	c	Length L	Qty/PU	Part no.
mm	mm	mm	mm		
800	50	700	658	2	**23130-119**
800	50	700	658	10	**23130-124**

Cabinets – VARISTAR EMC

19" stationary shelf, 75 kg

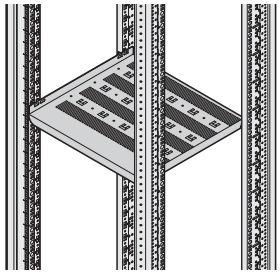

01004066

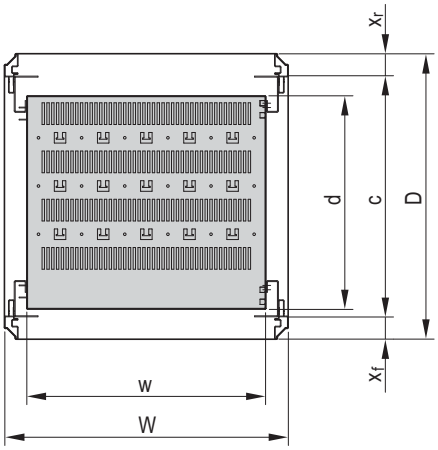

01004067

c = max. pitch of the 19" slide mounts
x_f, x_r = standard assembly dimension

- Static load-carrying capacity 75 kg (150 kg with strengthening rail)
- Mounting height 1 U, for mounting on four panel/slide mounts
- With hammer head perforation to fix cable ties

Delivery comprises

Item	Qty	Description
1	1	Perforated shelf, St, 1.5 mm (colour see Order Information)
2	1	Assembly kit incl. GND/earthing

Order Information

For cabinet depth	Usable surface w x d	x_f	c	RAL 7035	RAL 7021
mm	mm	mm	mm	Part no.	Part no.
800	495 x 642	50	700	**22130-305**	**21130-305**
Strengthening rail for stationary 19" shelf PU 1 piece					**23130-310**

Note

- Cable ducting with cable ties, see page 1.67
- Other sizes, see ServicePLUS, page 1.80

19'' telescopic shelf, 30 kg

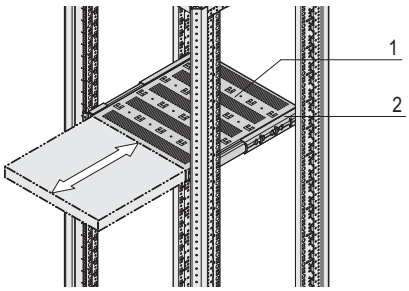

01004068

- Static load-carrying capacity at full extension 30 kg
- Mounting height 1 U, for mounting on four 19" panel/slide mounts
- Incl. telescopic slides
- Hammer head perforation to fix cable ties
- 2 versions
  - Full depth
  - Depth shortened by 100 mm for rear cable ducting

Delivery comprises

Item	Qty	Description
1	1	Perforated shelf, St, 1.5 mm (colour see Order Information)
2	2	Telescopic slide
3	1	Assembly kit

Order Information

Full depth

Full depth

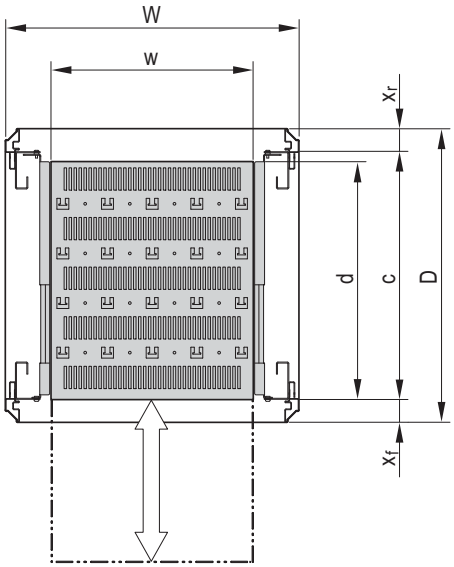

01004069

For cabinet depth	Usable surface w x d	x_f	c	RAL 7035	RAL 7021
mm	mm	mm	mm	Part no.	Part no.
800	417 x 682	50	700	**22130-345**	**21130-345**
GND/earthing for telescopic 19" shelf PU 1 kit, for VARISTAR					**23130-140**

Note

- Cable ducting with cable ties, see page 1.67

Order Information

Shortened by 100 mm

Shortened depth

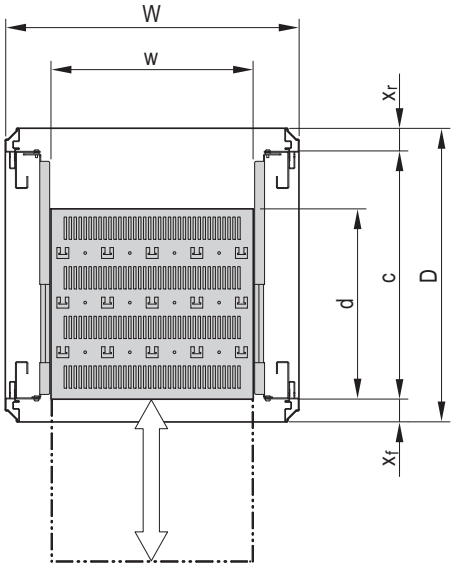

01004070

For cabinet depth	Usable surface w x d	x_f	c	RAL 7035	RAL 7021
mm	mm	mm	mm	Part no.	Part no.
800	417 x 582	50	700	**22130-344**	**21130-344**
GND/earthing for telescopic 19" shelf PU 1 kit, for VARISTAR					**23130-140**

Note

- Cable ducting with cable ties, see page 1.67

c = max. pitch of the 19" panel/slide mounts
x_f, x_r = standard assembly pitch

Cabinets – VARISTAR EMC

19" telescopic shelf, 70 kg

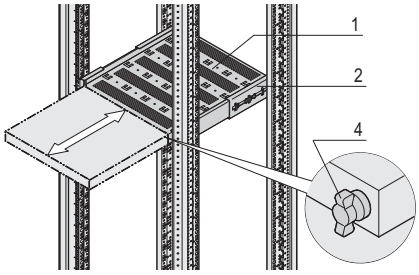

01004071

- Static load-carrying capacity at full extension 70 kg
- Mounting height 2 U, for mounting on four 19" panel/slide mounts
- Incl. telescopic slides
- Locking with T-bar lock possible
- Hammer head perforation to fix cable ties
- 2 versions
  - Full depth
  - Depth shortened by 100 mm for rear cable ducting

Full depth

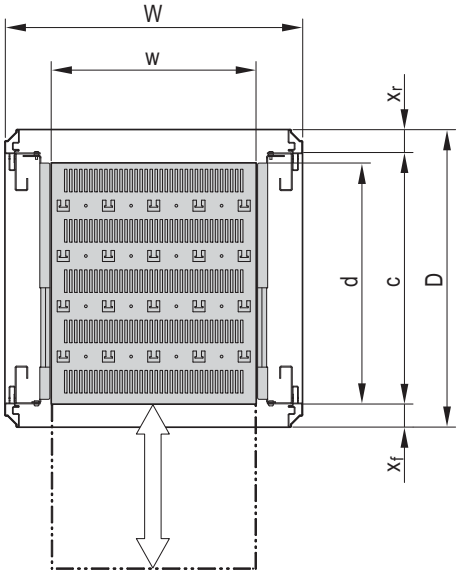

01004069

c = max. pitch for 19" panel/slide mounts

Shortened depth

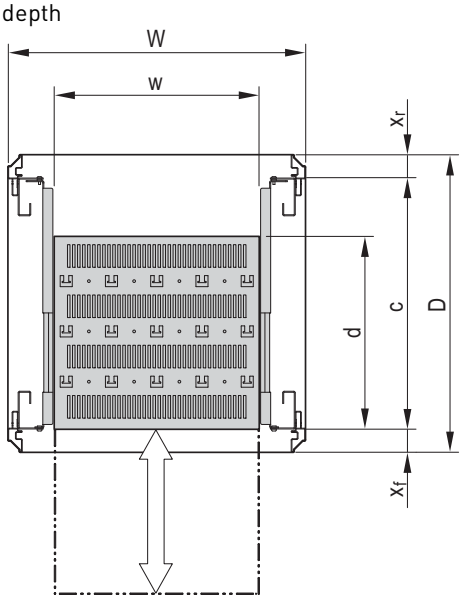

01004070

c = max. pitch of the 19" panel/slide mounts
x_f, x_r = standard assembly dimension

Delivery comprises

Item	Qty	Description
1	1	Perforated shelf, St, 1.5 mm (colour see Order Information)
2	2	Telescopic slide
3	1	Assembly kit

Order Information

Full depth

For cabinet depth	Usable surface w x d	x_f	c	RAL 7035	RAL 7021
mm	mm	mm	mm	Part no.	Part no.
800	405 x 682	50	700	**22130-355**	**21130-355**
Item 4 T-bar lock for 1 telescopic shelf (can be mounted right or left), 1 piece					**23130-092**
GND/earthing for telescopic 19" shelf PU 1 kit, for VARISTAR					**23130-140**

Note

- Please order T-bar lock (item 4) separately
- Cable ducting with cable ties, see page 1.67

Order Information

Shortened by 100 mm

For cabinet depth	Usable surface w x d	x_f	c	RAL 7035	RAL 7021
mm	mm	mm	mm	Part no.	Part no.
800	405 x 582	50	700	**22130-354**	**21130-354**
Item 4 T-bar lock for 1 telescopic shelf (can be mounted right or left), 1 piece					**23130-092**
GND/earthing for telescopic 19" shelf PU 1 kit, for VARISTAR					**23130-140**

Note

- Please order T-bar lock (item 4) separately
- Cable ducting with cable ties, see page 1.67

Depth member

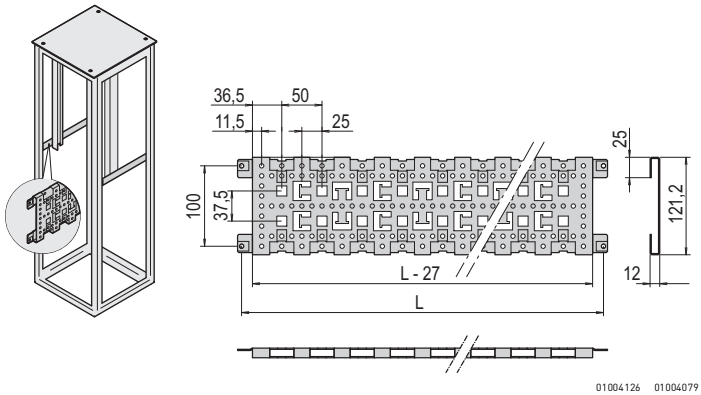

- For mounting of shortened 19" panel/slide mounts
- Cable ducting by means of cable ties and cable eyes

Delivery comprises

Item	Qty	Description
1	2	Depth member, St, 1.5 mm, finish AlZn
2	1	Assembly kit incl. GND/earthing

Order Information

Description	For cabinet depth mm	Part no.
Depth member	800	23130-082
Cable eye A = 38 mm, B = 25 mm, PU 25 pieces		21101-151
Cable eye A = 47 mm, B = 50 mm, PU 25 pieces		21101-150

- Cable ducting with cable ties, see page 1.67

Cable eye

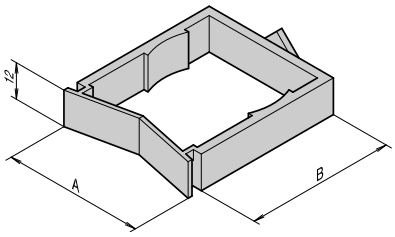

C-profile for the cabinet depth

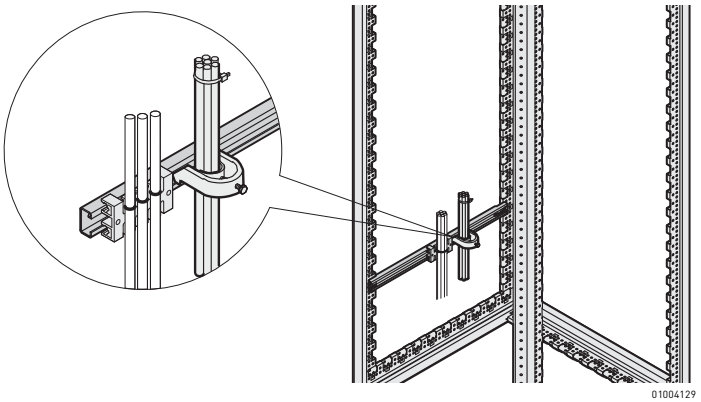

Cable retention rail and cable shell mounted on C-profile

- For cable ducting in lateral area of cabinet
- For cable shells and cable retention rails

Delivery comprises

Item	Qty	Description
1	2	C-profile, St, 1.5 mm, AlZn
2	1	Assembly kit incl. GND/earthing

Order Information

For cabinet depth mm	Length L mm	Part no.
800	660	23130-087
Accessories		
Cable retention rail for C-rail width 75 mm, length 39.5 mm, PU 5 pieces		60118-472
Cable shell for cable bundle 18 ... 22 mm, PU 10 pieces		20118-775
Cable shell for cable bundle 22 ... 26 mm, PU 10 pieces		20118-776
Cable shell for cable bundle 26 ... 30 mm, PU 10 pieces		20118-777
Cable shell for cable bundle 30 ... 34 mm, PU 10 pieces		20114-728
Cable shell for cable bundle 34 ... 38 mm, PU 10 pieces		20114-729
Cable shell for cable bundle 38 ... 42 mm, PU 10 pieces		20114-730
Cable shell for cable bundle 42 ... 46 mm, PU 10 pieces		20114-731
Cable shell for cable bundle 46 ... 50 mm, PU 10 pieces		20118-778
Slide nut for C-profile, PU 10 pieces		21120-140

Note

- Cable ties and Velcro for cable retention rail see page 1.67

Slide nut

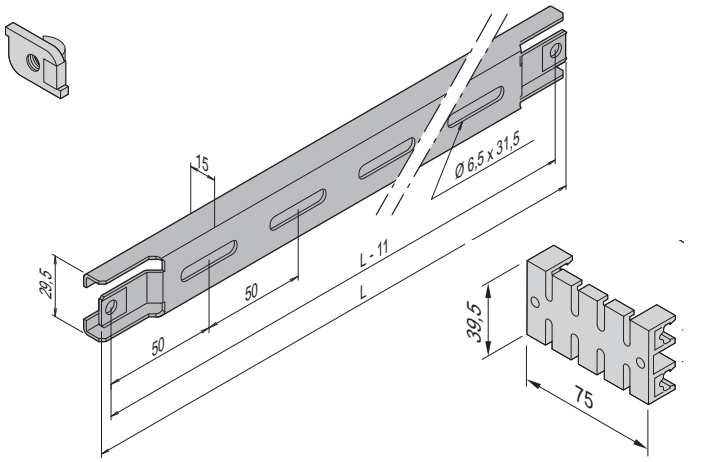

C-profile Cable retention rail

Cabinets – VARISTAR EMC

C-profile for cabinet width

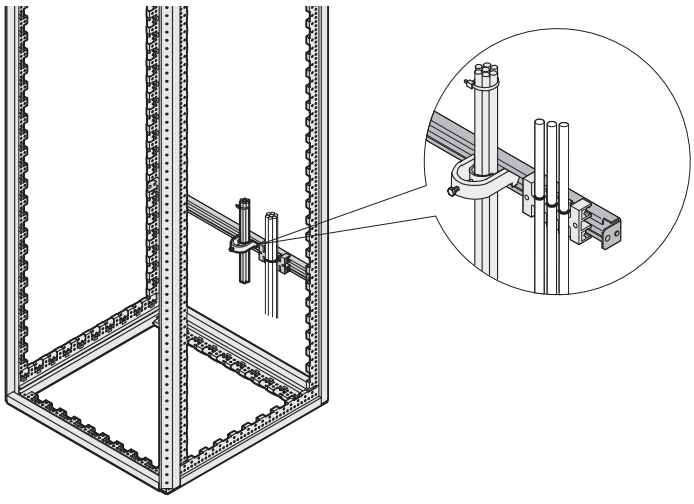

C-profile

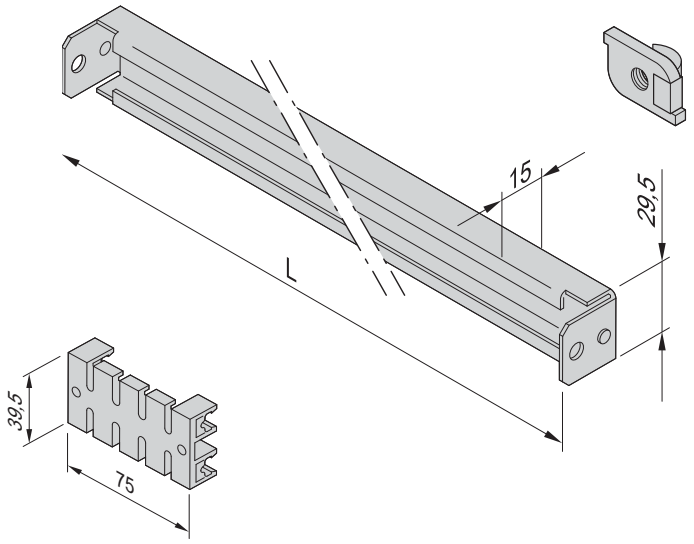

Slide nut

Cable retention rail

- For cable ducting in rear or front area of cabinet
- For cable shells and cable retention rails

Delivery comprises

Item	Qty	Description
1	2	C-profile, St, 1.5 mm, finish AlZn
2	1	Assembly kit incl. GND/earthing

Order Information

For cabinet width mm	Length mm	Part no.
800	750	**23130-334**
Accessories		
Cable retention rail for C-rail width 75 mm, length 39.5 mm, PU 5 pieces		**60118-472**
Cable shell for cable bundle 18 ... 22 mm, PU 10 pieces		**20118-775**
Cable shell for cable bundle 22 ... 26 mm, PU 10 pieces		**20118-776**
Cable shell for cable bundle 26 ... 30 mm, PU 10 pieces		**20118-777**
Cable shell for cable bundle 30 ... 34 mm, PU 10 pieces		**20114-728**
Cable shell for cable bundle 34 ... 38 mm, PU 10 pieces		**20114-729**
Cable shell for cable bundle 38 ... 42 mm, PU 10 pieces		**20114-730**
Cable shell for cable bundle 42 ... 46 mm, PU 10 pieces		**20114-731**
Cable shell for cable bundle 46 ... 50 mm, PU 10 pieces		20118-778
Slide nut for C-profile, PU 10 pieces		**21120-140**

Note

- Cable ties and Velcro for cable retention rail see page 1.67

Cable ties, Velcro

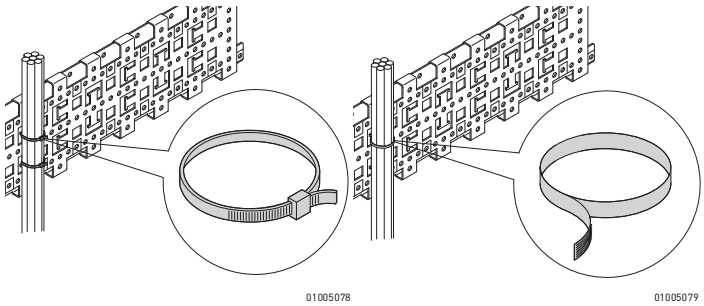

Cable tie

Velcro

- Fixing materials kit for cable ducting

Order Information

Description	Part no.
Cable tie, Plastic, 92 mm x 2.5 mm, PU 25 pieces	**20118-351**
Cable tie, Plastic, 186 mm x 5 mm, PU 25 pieces	**20118-352**
Cable tie, Plastic, 360 mm x 5 mm, PU 25 pieces	**20118-353**
Velcro strip, PE/PA, black, length 300 mm, PU 10 pieces	**20118-624**

Cabinets – VARISTAR EMC ServicePLUS

configuration

Components can be varied and combined freely

Simple. Fast. To the ideal product.

- Configuration tables from page 1.69
- Online configuration: www.schroff.co.uk/configuration

assembly

Fitting of all mechanical, electrical and electronic components by our specialists

Assembled by professionals. Double benefit!

- Without extra cost
- Ready for despatch within 10 working days

modification

Custom drillings, cut-outs and special colours for off-the-shelf products

Small changes. Large impact.

- Download CAD data and send back with modifications
- Ready for despatch within 10 working days

solution

Integration and custom developments

Simple. Fast. From one source.

- Climate control, complete assembly, cabling (power supply), function test
- Special sizes, customised solutions

academy

Knowledge transfer and partnership

Knowledge. Sharing. Partnerships.

- Seminars, white papers, CAD drawings, test reports, user reports
- Further information: www.varistar.co.uk

lifecycle

Flexible support throughout the product lifecycle

We are with you. For the entire product life.

- Delivery to point of use, installation service, exchange service, replacement parts

Cabinets – VARISTAR EMC ServicePLUS

VARISTAR ServicePLUS: configuration and assembly

- Dimensions:
  - Height: 29 ... 47 U (1400 ... 2200 mm)
  - Width: 600 and 800 mm
  - Depth: 600, 800 and 1000 mm
- 2 colour combinations:
  - Frame and covers in black grey (RAL 7021)
  - Frame, top cover and base in black grey (RAL 7021); Side panel, door and rear panel in light grey (RAL 7035)
- Build your cabinet out of individual components (please suffix each part number with /05)
- Once you have selected the desired cabinet dimensions, the row number (first column of the configuration tables) will guide you through all subsequent configuration pages that apply to these dimensions (see example below)
- The cabinet is assembled by us and ready for despatch within 10 working days

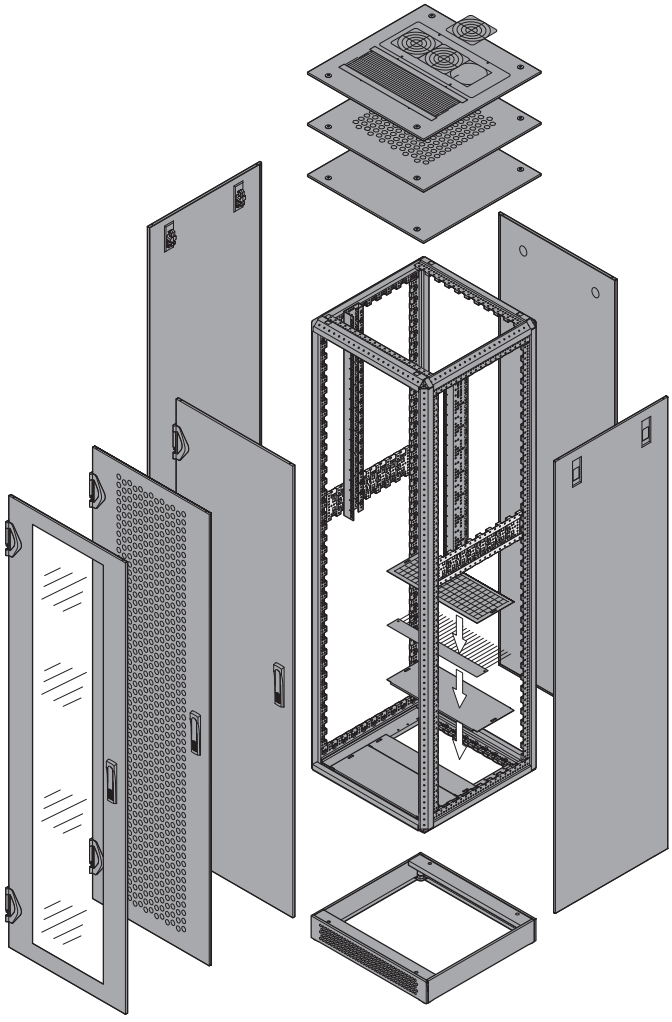

01004077

Example configuration (here: row 9)

Qty	Description	Order no.
1	Frame Slim-Line, height 2000 mm, width 600 mm, depth 800 mm, 1 piece	20130-019/05
1	EMC gasketing kit, 1 piece	23130-065/05
1	Side panel screw-fixing, EMC, PU 2 pieces	21130-031/05
1	Screw-fixed rear panel, EMC, 1 piece	21130-084/05
1	Steel door with 4-point locking, EMC, 1 piece	21130-174/05
1	Adjustable feet, PU 4 pieces	23130-079/05
..	.....	.....

	Page
Frames, EMC gasketing, side-by-side mounting kits, adjustable feet, castors	1.70
Side panels, rear panels, doors	1.71
Top covers, fan top covers, lifting eyes	1.72
Bases, plinths	1.73
Connecting plates for short doors/rear panels	1.74

Interior configuration

19" panel/slide mounts	1.75
ETSI panel/slide mounts	1.76
Swing frames	1.77
Stationary shelves	1.78
Telescopic shelves, 70 kg	1.79
19" shelves 1 U, stationary 75 kg, telescopic 30 kg	1.80
19" telescopic shelves, 2 U, 70 kg	1.81
Slide rails, depth members	1.82
Cable ductings	1.83

VARISTAR EMC Frames, EMC gasketing, side-by-side mounting kits, adjustable feet, castors

Order Information

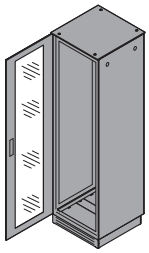
Completely in RAL 7021 (black grey)

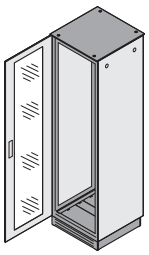
Colour combination RAL 7035 (light grey)/ RAL 7021 (black grey)

No.	Cabinet dimensions Height U	Height mm	Width mm	Depth mm	Frame: Slim-Line 400 kg	Frame: Heavy-Duty 800 kg	EMC gasketing kit	Side-by-side mounting kit EMC	Adjustable feet	Castors: With 2 jacking feet	Castors: With adjustable feet
					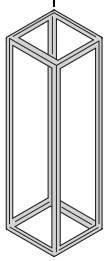 01004078		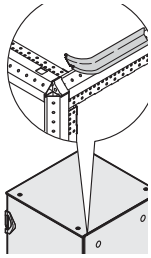 01004157	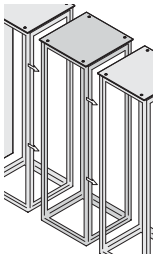 01004120	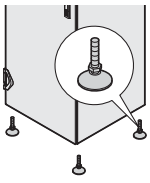 01004081	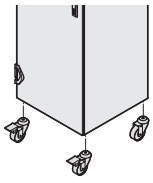 01004082	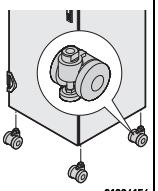 01004156
					static load-carrying capacity: 400 kg, St, 1.5 mm, zinc-plated, with central GND/ earthing point; please order adjustable feet or castors separately	static load-carrying capacity: 800 kg, St, 1.5 mm, zinc-plated, with central GND/ earthing point; please order adjustable feet or castors separately	gaskets are glued to the frame, through which all the following cover parts are conductively linked	side-by-side mounting brackets (4 pieces), St	for the frame, static load-carrying capacity: 1000 kg, cannot be used with base/plinth	for the frame, static load-carrying capacity: 400 kg, cannot be used with base/plinth	for the frame, static load-carrying capacity: 400 kg, cannot be used with base/plinth
					1 piece assembled	1 piece assembled	PU 1 kit assembled	PU 1 kit supplied loose	PU 4 pieces assembled	PU 4 pieces	PU 4 pieces
Completely in RAL 7021					RAL 7021	RAL 7021		RAL 7021			
1	29	1400	600	600	20130-005	20130-055	23130-065	23130-063	23130-079	23130-077	23130-078
2	29	1400	600	800	20130-006	20130-056					
3	33	1600	600	600	20130-009	20130-059	23130-065	23130-063	23130-079	23130-077	23130-078
4	33	1600	600	800	20130-010	20130-060					
5	38	1800	600	600	20130-013	20130-063	23130-065	23130-063	23130-079	23130-077	23130-078
6	38	1800	600	800	20130-014	20130-064					
7	38	1800	800	600	20130-015	20130-065	23130-065	23130-063	23130-079	23130-077	23130-078
8	42	2000	600	600	20130-018	20130-068	23130-065	23130-063	23130-079	23130-077	23130-078
9	42	2000	600	800	20130-019	20130-069					
10	42	2000	600	1000	20130-021	20130-071					
11	42	2000	800	600	20130-022	20130-072	23130-065	23130-063	23130-079	23130-077	23130-078
12	42	2000	800	800	20130-023	20130-073					
13	47	2200	600	600	20130-027	20130-077	23130-065	23130-063	23130-079	23130-077	23130-078
14	47	2200	600	800	20130-028	20130-078					
15	47	2200	600	1000	20130-030	20130-080					
16	47	2200	800	800	20130-032	20130-082	23130-065	23130-063	23130-079	23130-077	23130-078
Colour combinations					RAL 7021	RAL 7021					
17	29	1400	600	600	20130-005	20130-055	23130-065	23130-063	23130-079	23130-077	23130-078
18	29	1400	600	800	20130-006	20130-056					
19	33	1600	600	600	20130-009	20130-059	23130-065	23130-063	23130-079	23130-077	23130-078
20	33	1600	600	800	20130-010	20130-060					
21	38	1800	600	600	20130-013	20130-063	23130-065	23130-063	23130-079	23130-077	23130-078
22	38	1800	600	800	20130-014	20130-064					
23	38	1800	800	600	20130-015	20130-065	23130-065	23130-063	23130-079	23130-077	23130-078
24	42	2000	600	600	20130-018	20130-068	23130-065	23130-063	23130-079	23130-077	23130-078
25	42	2000	600	800	20130-019	20130-069					
26	42	2000	600	1000	20130-021	20130-071					
27	42	2000	800	600	20130-022	20130-072	23130-065	23130-063	23130-079	23130-077	23130-078
28	42	2000	800	800	20130-023	20130-073					
29	47	2200	600	600	20130-027	20130-077	23130-065	23130-063	23130-079	23130-077	23130-078
30	47	2200	600	800	20130-028	20130-078					
31	47	2200	600	1000	20130-030	20130-080					
32	47	2200	800	800	20130-032	20130-082	23130-065	23130-063	23130-079	23130-077	23130-078

Other dimensions and configurations online (with basket) at www.schroff.biz/conf

Cabinets – VARISTAR EMC ServicePLUS

VARISTAR EMC Side panels, rear panels, doors

Order Information

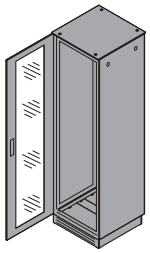

Completely in RAL 7021 (black grey)

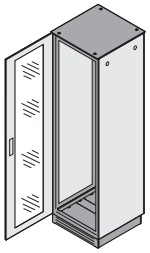

Colour combination RAL 7035 (light grey)/ RAL 7021 (black grey)

No.	Cabinet dimensions Height U	Height mm	Width mm	Depth mm	Side panel, screw fixed, EMC, IP 55	Rear panel, screw fixed, EMC, IP 55	Steel door, 4-point locking: Plain, EMC, IP 55	Steel door, 4-point locking: Perforated, EMC	Steel door, 4-point locking: DIN profile half cylinder
					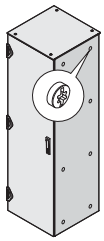 01004083	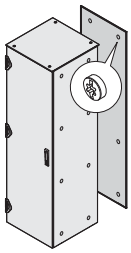 01004085	01004092	01004093	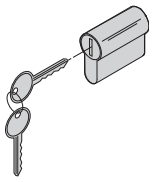 01004148
					St, 1 mm, painted outside, AlZn inside, incl. GND/ earthing	St, 1 mm, painted outside, AlZn inside, incl. GND/ earthing	St, 1.5 mm, painted outside, AlZn inside, opening angle 180°, lever handle with push button, incl. GND/ earthing	St, 1.5 mm, painted outside, AlZn inside, opening angle 180°, lever handle with push button, incl. GND/ earthing	for lever handle, common locking
					PU 2 pieces assembled	1 piece assembled	1 piece assembled	1 piece assembled	1 piece assembled
Completely in RAL 7021					RAL 7021	RAL 7021	RAL 7021	RAL 7021	
1	29	1400	600	600	21130-023	21130-078	21130-168	21130-198	25127-995
2	29	1400	600	800	21130-024				
3	33	1600	600	600	21130-025	21130-080	21130-170	21130-200	25127-995
4	33	1600	600	800	21130-026				
5	38	1800	600	600	21130-027	21130-082	21130-172	21130-202	25127-995
6	38	1800	600	800	21130-028				
7	38	1800	800	600	21130-027	21130-083	21130-173	21130-203	25127-995
8	42	2000	600	600	21130-030	21130-084	21130-174	21130-204	25127-995
9	42	2000	600	800	21130-031				
10	42	2000	600	1000	21130-033				
11	42	2000	800	600	21130-030	21130-085	21130-175	21130-205	25127-995
12	42	2000	800	800	21130-031				
13	47	2200	600	600	21130-035	21130-086	21130-176	21130-206	25127-995
14	47	2200	600	800	21130-036				
15	47	2200	600	1000	21130-038				
16	47	2200	800	800	21130-036	21130-087	21130-177	21130-207	25127-995
Colour combinations					RAL 7035	RAL 7035	RAL 7035	RAL 7035	
17	29	1400	600	600	22130-023	22130-078	22130-168	22130-198	25127-995
18	29	1400	600	800	22130-024				
19	33	1600	600	600	22130-025	22130-080	22130-170	22130-200	25127-995
20	33	1600	600	800	22130-026				
21	38	1800	600	600	22130-027	22130-082	22130-172	22130-202	25127-995
22	38	1800	600	800	22130-028				
23	38	1800	800	600	22130-027	22130-083	22130-173	22130-203	25127-995
24	42	2000	600	600	22130-030	22130-084	22130-174	22130-204	25127-995
25	42	2000	600	800	22130-031				
26	42	2000	600	1000	22130-033				
27	42	2000	800	600	22130-030	22130-085	22130-175	22130-205	25127-995
28	42	2000	800	800	22130-031				
29	47	2200	600	600	22130-035	22130-086	22130-176	22130-206	25127-995
30	47	2200	600	800	22130-036				
31	47	2200	600	1000	22130-038				
32	47	2200	800	800	22130-036	22130-087	22130-177	22130-207	25127-995

VARISTAR EMC Top covers, fan top covers, lifting eyes

Order Information

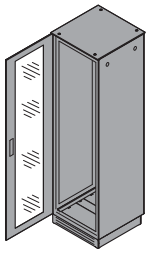
Completely in RAL 7021 (black grey)

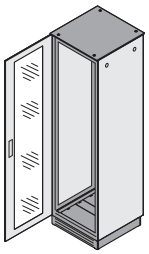
Colour combination RAL 7035 (light grey)/ RAL 7021 (black grey)

					Flat top cover		Fan top cover				
					EMC, IP 55	Lifting eye	EMC top cover for 6 fans	Replacement fan for fan top	Thermostat	Speed control	Lifting eye
					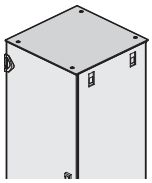 01004096	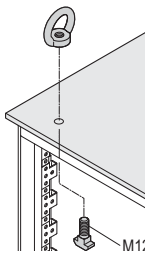 01004090	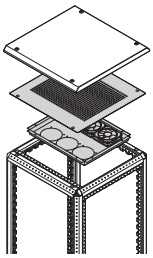 01008050	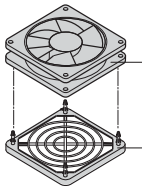 kta44844	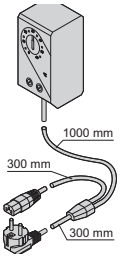 01108052	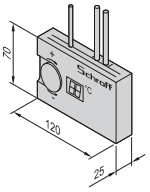 01105055	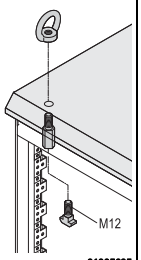 01005085
					St, 1,5 mm, painted outside, AlZn inside, incl. GND/ earthing	for top cover, applications and load in accordance with DIN 582	St, 1.5 mm, RAL 7021; with 3 axial fans 230 V_{AC}, incl. cabling and GND/earthing, connector 2.5m, SCHUKO/ IEC 60320 C12 plug	fan with grille for top assembly, 230 V_{AC}, 38x119x119 mm, for 50 Hz, 162 m^3/ h	with mains cable 230 V_{AC} (SCHUKO/UTE plug/ IEC 60320 C13 socket), adjustment range 0 ... 60°C	fully wired, 90 ... 264 V_{AC}, input SCHUKO/ UTE plug, outlet IEC 60320 C13 socket; external NTC sensor 1.5 m	for fan top cover, applications and static load-carrying capacity in accordance with DIN 582
	Cabinet dimensions										
No.	Height U	mm	Width mm	Depth mm	1 piece assembled	PU 4 pieces assembled	1 piece assembled	1 piece assembled	1 piece assembled	1 piece assembled	PU 4 pieces assembled
Completely in RAL 7021					RAL 7021		RAL 7021				
1	29	1400	600	600	21130-272	23130-072	23130-395	23130-165	20118-750	60715-005	23130-090
2	29	1400	600	800	21130-273		23130-396				
3	33	1600	600	600	21130-272	23130-072	23130-395	23130-165	20118-750	60715-005	23130-090
4	33	1600	600	800	21130-273		23130-396				
5	38	1800	600	600	21130-272	23130-072	23130-395	23130-165	20118-750	60715-005	23130-090
6	38	1800	600	800	21130-273		23130-396				
7	38	1800	800	600	21130-276	23130-072	23130-397	23130-165	20118-750	60715-005	23130-090
8	42	2000	600	600	21130-272	23130-072	23130-395	23130-165	20118-750	60715-005	23130-090
9	42	2000	600	800	21130-273		23130-396				
10	42	2000	600	1000	21130-275		23130-443				
11	42	2000	800	600	21130-276	23130-072	23130-397	23130-165	20118-750	60715-005	23130-090
12	42	2000	800	800	21130-277		23130-398				
13	47	2200	600	600	21130-272	23130-072	23130-395	23130-165	20118-750	60715-005	23130-090
14	47	2200	600	800	21130-273		23130-396				
15	47	2200	600	1000	21130-275		23130-443				
16	47	2200	800	800	21130-277	23130-072	23130-398	23130-165	20118-750	60715-005	23130-090
Colour combinations					RAL 7021		RAL 7021				
17	29	1400	600	600	21130-272	23130-072	23130-395	23130-165	20118-750	60715-005	23130-090
18	29	1400	600	800	21130-273		23130-396				
19	33	1600	600	600	21130-272	23130-072	23130-395	23130-165	20118-750	60715-005	23130-090
20	33	1600	600	800	21130-273		23130-396				
21	38	1800	600	600	21130-272	23130-072	23130-395	23130-165	20118-750	60715-005	23130-090
22	38	1800	600	800	21130-273		23130-396				
23	38	1800	800	600	21130-276	23130-072	23130-397	23130-165	20118-750	60715-005	23130-090
24	42	2000	600	600	21130-272	23130-072	23130-395	23130-165	20118-750	60715-005	23130-090
25	42	2000	600	800	21130-273		23130-396				
26	42	2000	600	1000	21130-275		23130-443				
27	42	2000	800	600	21130-276	23130-072	23130-397	23130-165	20118-750	60715-005	23130-090
28	42	2000	800	800	21130-277		23130-398				
29	47	2200	600	600	21130-272	23130-072	23130-395	23130-165	20118-750	60715-005	23130-090
30	47	2200	600	800	21130-273		23130-396				
31	47	2200	600	1000	21130-275		23130-443				
32	47	2200	800	800	21130-277	23130-072	23130-398	23130-165	20118-750	60715-005	23130-090

Cabinets – VARISTAR EMC ServicePLUS

VARISTAR EMC Bases, plinths

Order Information

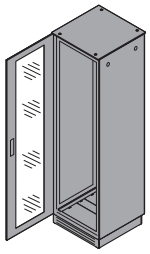

Completely in RAL 7021 (black grey)

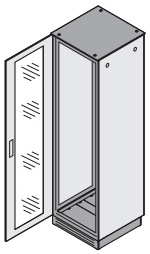

Colour combination RAL 7035 (light grey)/ RAL 7021 (black grey)

					Base plate			Base/plinth			Base/plinth, mobile
					One-piece, EMC, IP 55	With cable ducting, EMC	Perforated, with cable ducting, EMC	Plain base/plinth	Base/plinth, ventilated	Side covers	
					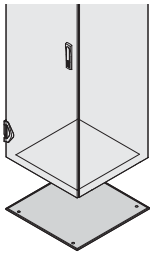 01004051	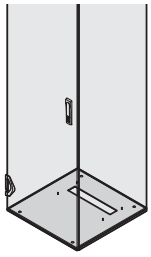 01004108	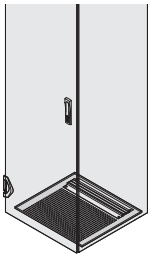 01008051	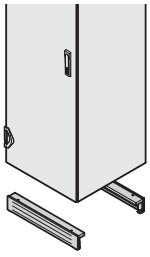 01004110	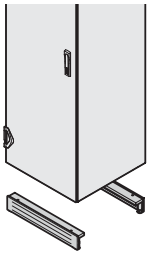 01004110	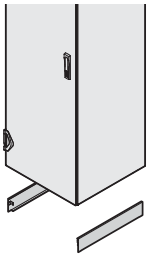 01004053	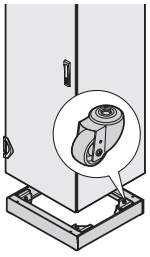 01004111
					AlZn, 1.5 mm, incl. GND/ earthing, assembly from outside	AlZn, 1.5 mm, rear opening 60 mm deep, incl. GND/ earthing, assembly from outside	AlZn, 1.5 mm, incl. GND/ earthing; opening at rear: for cabinet width of 600 mm: 359 x 60 mm, for cabinet width of 800 mm: 559 x 60 mm	support with adjustable feet and 2 trims, static load-carrying capacity 1000 kg; please order side trims separately	support with adjustable feet and 2 trims, perforated, static load-carrying capacity 1000 kg; please order side trims separately	St, 1.5 mm	support, St, 3 mm, trim, St, 1.5 mm, static load-carrying capacity on castors 400 kg, on adjustable feet 1000 kg
	Cabinet dimensions										
No.	Height U	mm	Width mm	Depth mm	1 piece assembled	1 piece assembled	1 piece assembled	PU 1 kit assembled	PU 1 kit assembled	PU 1 pair assembled	1 piece assembled
	Completely in RAL 7021				AlZn	AlZn	AlZn	RAL 7021	RAL 7021	RAL 7021	RAL 7021
1	29	1400	600	600	21130-281	21130-291	23130-400	23130-387	23130-187	23130-169	23130-208
2	29	1400	600	800	21130-282	21130-292	23130-401			23130-170	23130-209
3	33	1600	600	600	21130-281	21130-291	23130-400	23130-387	23130-187	23130-169	23130-208
4	33	1600	600	800	21130-282	21130-292	23130-401			23130-170	23130-209
5	38	1800	600	600	21130-281	21130-291	23130-400	23130-387	23130-187	23130-169	23130-208
6	38	1800	600	800	21130-282	21130-292	23130-401			23130-170	23130-209
7	38	1800	800	600	21130-283	21130-293	23130-402	23130-388	23130-194	23130-169	23130-212
8	42	2000	600	600	21130-281	21130-291	23130-400	23130-387	23130-187	23130-169	23130-208
9	42	2000	600	800	21130-282	21130-292	23130-401			23130-170	23130-209
10	42	2000	600	1000	21130-287	21130-296	23130-447			23130-172	23130-211
11	42	2000	800	600	21130-283	21130-293	23130-402	23130-388	23130-194	23130-169	23130-212
12	42	2000	800	800	21130-284	21130-294	23130-403			23130-170	23130-213
13	47	2200	600	600	21130-281	21130-291	23130-400	23130-387	23130-187	23130-169	23130-208
14	47	2200	600	800	21130-282	21130-292	23130-401			23130-170	23130-209
15	47	2200	600	1000	21130-287	21130-296	23130-447			23130-172	23130-211
16	47	2200	800	800	21130-284	21130-294	23130-403	23130-388	23130-194	23130-170	23130-213
	Colour combinations				AlZn	AlZn	AlZn	RAL 7021	RAL 7021	RAL 7021	RAL 7021
17	29	1400	600	600	21130-281	21130-291	23130-400	23130-387	23130-187	23130-169	23130-208
18	29	1400	600	800	21130-282	21130-292	23130-401			23130-170	23130-209
19	33	1600	600	600	21130-281	21130-291	23130-400	23130-387	23130-187	23130-169	23130-208
20	33	1600	600	800	21130-282	21130-292	23130-401			23130-170	23130-209
21	38	1800	600	600	21130-281	21130-291	23130-400	23130-387	23130-187	23130-169	23130-208
22	38	1800	600	800	21130-282	21130-292	23130-401			23130-170	23130-209
23	38	1800	800	600	21130-283	21130-293	23130-402	23130-388	23130-194	23130-169	23130-212
24	42	2000	600	600	21130-281	21130-291	23130-400	23130-387	23130-187	23130-169	23130-208
25	42	2000	600	800	21130-282	21130-292	23130-401			23130-170	23130-209
26	42	2000	600	1000	21130-287	21130-296	23130-447			23130-172	23130-211
27	42	2000	800	600	21130-283	21130-293	23130-402	23130-388	23130-194	23130-169	23130-212
28	42	2000	800	800	21130-284	21130-294	23130-403			23130-170	23130-213
29	47	2200	600	600	21130-281	21130-291	23130-400	23130-387	23130-187	23130-169	23130-208
30	47	2200	600	800	21130-282	21130-292	23130-401			23130-170	23130-209
31	47	2200	600	1000	21130-287	21130-296	23130-447			23130-172	23130-211
32	47	2200	800	800	21130-284	21130-294	23130-403	23130-388	23130-194	23130-170	23130-213

VARISTAR EMC Connecting plates for short doors/rear panels

Order Information

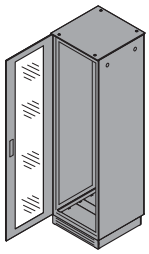 Completely in RAL 7021 (black grey) 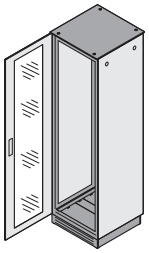 Colour combination RAL 7035 (light grey)/ RAL 7021 (black grey) Cabinet dimensions Height U	mm	Width mm	Depth mm	Dimensioning connecting plate door/rear panel	EMC connecting plate	
					Flat plate, EMC, IP 55	Recessed plate, EMC, IP 55
				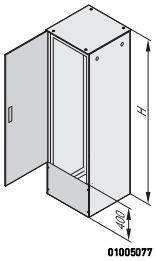 01005077	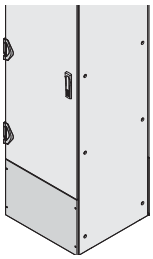 01005075	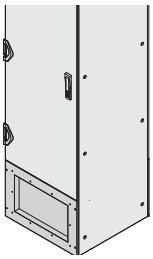 01005074
				door and rear panel must be selected 400 mm shorter than cabinet height	flat plate, stainless steel, 1 mm, height 400 mm, mounting can be at top or bottom	frame, stainless steel, 1 mm, mounting can be at top or bottom, height 400 mm, plate recessed by 40 mm, stainless steel, 1 mm
					1 piece assembled	1 piece assembled
Completely in RAL 7021					RAL 7021	RAL 7021
400		600			21130-578	21130-580
400		800			21130-579	21130-581
Colour combinations					RAL 7035	RAL 7035
400		600			22130-578	22130-580
400		800			22130-579	22130-581

Cabinets – VARISTAR EMC ServicePLUS

Interior mounting 19" panel/slide mounts

Order Information

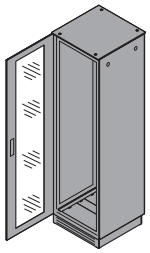

Completely in RAL 7021 (black grey)

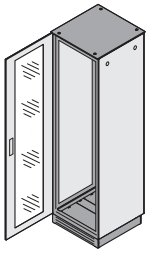

Colour combination RAL 7035 (light grey)/ RAL 7021 (black grey)

Dimension
Standard fitting

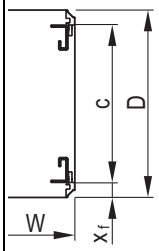

01004146

x_f = distance from front
c = pitch of 19" panel/slide mounts
D = cabinet depth
W = cabinet width

19" panel/slide mounts EIA

Painted RAL 7021

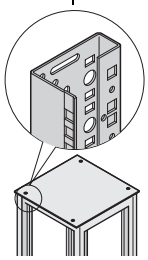

01004112

St, 1.75 mm; reduced-width adapter bracket required for 800 mm width; depth members are required for partial-height mounting

AlZn

U height identification for 19" panel/slide mount

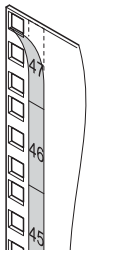

00505050

paper strip, white, serial numbered from 1 ... 47 H

19" assembly kit M6

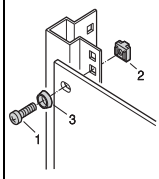

sc128

assembly kit: item 1: screws, item 2: cage nuts, item 3: washers other kit quantities see page 3.17

Adapter bracket for reduced width

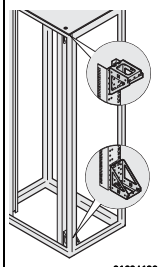

01004128

St, 2 mm, finish AlZn, for fixing the 19" panel/slide mounts in 800 mm wide cabinets

No.	Cabinet dimensions Height U	Height mm	Width mm	Depth mm	x_f mm	c mm	PU 1 pair assembled	PU 1 pair assembled	PU 4 pieces assembled	PU 50 pieces supplied loose	PU 4 pieces assembled
Completely in RAL 7021							**RAL 7021**	**AlZn**			**AlZn**
1	29	1400	600	600	50	500	23130-012	23130-032	25127-997	21101-809	–
2	29	1400	600	800	50	700					
3	33	1600	600	600	50	500	23130-013	23130-033	25127-997	21101-809	–
4	33	1600	600	800	50	700					
5	38	1800	600	600	50	500	23130-014	23130-034	25127-997	21101-809	–
6	38	1800	600	800	50	700					
7	38	1800	800	600	50	500	23130-014	23130-034	25127-997	21101-809	23130-091
8	42	2000	600	600	50	500	23130-015	23130-035	25127-997	21101-809	–
9	42	2000	600	800	50	700					
10	42	2000	600	1000	70	740					
11	42	2000	800	600	50	500	23130-015	23130-035	25127-997	21101-809	23130-091
12	42	2000	800	800	150	500					
13	47	2200	600	600	50	500	23130-016	23130-036	25127-997	21101-809	–
14	47	2200	600	800	50	700					
15	47	2200	600	1000	50	700					
16	47	2200	800	800	150	500	23130-016	23130-036	25127-997	21101-809	23130-091
Colour combinations							**RAL 7035**	**AlZn**			**AlZn**
17	29	1400	600	600	50	500	23130-022	23130-032	25127-997	21101-809	–
18	29	1400	600	800	50	700					
19	33	1600	600	600	50	500	23130-023	23130-033	25127-997	21101-809	–
20	33	1600	600	800	50	700					
21	38	1800	600	600	50	500	23130-024	23130-034	25127-997	21101-809	–
22	38	1800	600	800	50	700					
23	38	1800	800	600	50	500	23130-024	23130-034	25127-997	21101-809	23130-091
24	42	2000	600	600	50	500	23130-025	23130-035	25127-997	21101-809	–
25	42	2000	600	800	50	700					
26	42	2000	600	1000	70	740					
27	42	2000	800	600	50	500	23130-025	23130-035	25127-997	21101-809	23130-091
28	42	2000	800	800	150	500					
29	47	2200	600	600	50	500	23130-026	23130-036	25127-997	21101-809	–
30	47	2200	600	800	50	700					
31	47	2200	600	1000	70	740					
32	47	2200	800	800	150	500	23130-026	23130-036	25127-997	21101-809	23130-091

Order Information

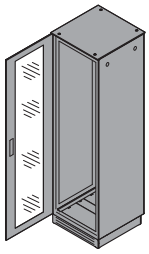

Completely in RAL 7021 (black grey)

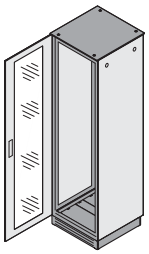

Colour combination RAL 7035 (light grey)/ RAL 7021 (black grey)

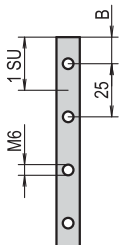

ETSI panel/slide mount, Dimensions: in accordance with ETS 300119-3 and IEC 60917-211; SU = 25 mm

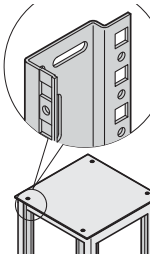

ETSI panel/slide mount, Panel/slide mount: St, 2 mm, AlZn finish, suitable only for Slim-Line frame; shelves available on request

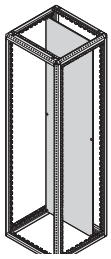

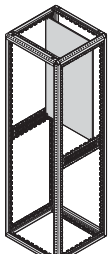

Mounting plates, Full height / Height 1200 mm: St, zinc-plated, 3 mm, static load-carrying capacity up to 450 kg (rear mounted); strengthening bracket increases static load-carrying capacity; please order separately

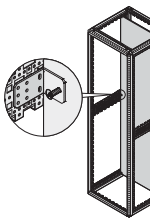

Mounting plates, Strengthening brackets: St profile, increases static load-carrying capacity of mounting plate to 150 kg

No.	Cabinet dimensions Height U	Height mm	Width mm	Depth mm	Height SU	PU 1 pair assembled	1 piece assembled	1 piece assembled	PU 2 pieces assembled
Completely in RAL 7021						AlZn	zinc-plated	zinc-plated	RAL 7021
1	29	1400	600	600	50	23130-052	–	23130-413	23130-418
2	29	1400	600	800	50				
3	33	1600	600	600	60	23130-053	–	23130-413	23130-418
4	33	1600	600	800	60				
5	38	1800	600	600	68	23130-054	23130-405	23130-413	23130-418
6	38	1800	600	800	68				
7	38	1800	800	600	68	23130-054	23130-406	23130-414	23130-418
8	42	2000	600	600	76	23130-055	23130-407	23130-413	23130-418
9	42	2000	600	800	76				
10	42	2000	600	1000	76				
11	42	2000	800	600	76	23130-055	23130-408	23130-414	23130-418
12	42	2000	800	800	76				
13	47	2200	600	600	84	23130-056	–	23130-413	23130-418
14	47	2200	600	800	84				
15	47	2200	600	1000	84				
16	47	2200	800	800	84	23130-056	–	23130-414	23130-418
Colour combinations						AlZn	verzinkt	verzinkt	RAL 7021
17	29	1400	600	600	50	23130-052	–	23130-413	23130-418
18	29	1400	600	800	50				
19	33	1600	600	600	60	23130-053	–	23130-413	23130-418
20	33	1600	600	800	60				
21	38	1800	600	600	68	23130-054	23130-405	23130-413	23130-418
22	38	1800	600	800	68				
23	38	1800	800	600	68	23130-054	23130-406	23130-414	23130-418
24	42	2000	600	600	76	23130-055	23130-407	23130-413	23130-418
25	42	2000	600	800	76				
26	42	2000	600	1000	76				
27	42	2000	800	600	76	23130-055	23130-408	23130-414	23130-418
28	42	2000	800	800	76				
29	47	2200	600	600	84	23130-056	–	23130-413	23130-418
30	47	2200	600	800	84				
31	47	2200	600	1000	84				
32	47	2200	800	800	84	23130-056	–	23130-414	23130-418

Cabinets – VARISTAR EMC ServicePLUS

Interior mounting Swing frames for cabinet width 600 mm

Order Information

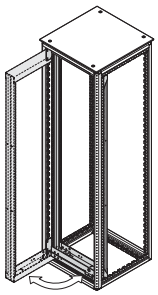

Height U	Usable height U	Width mm	Swing frame 01005070 St, 2 mm, RAL 7021, load-carrying capacity: 150 kg, 120° hinge, square locks incl. 2 keys (Dimension drawings link) 1 piece assembled	Stop 120° 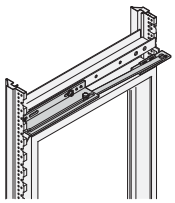 01005061 St; for safety reasons a swing frame stop is recommended PU 1 kit assembled	Safety lock 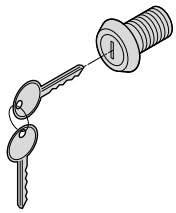 01015060 for swing frame, instead of square lock, incl. 2 keys 1 piece assembled	Spare key 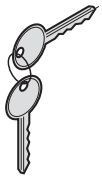 01015059 PU 2 pieces supplied loose
partial height	12	600	21130-740	23130-158	**60113-267**	**60220-003**
partial height	21	600	21130-741	23130-158	**60113-267**	**60220-003**
29	25	600	21130-742	23130-158	**60113-267**	**60220-003**
33	30	600	21130-743	23130-158	**60113-267**	**60220-003**
38	34	600	21130-744	23130-158	**60113-267**	**60220-003**
42	39	600	21130-745	23130-158	**60113-267**	**60220-003**
47	43	600	21130-746	23130-158	**60113-267**	**60220-003**

Interior mounting Swing frames for cabinet width 800 mm

Order Information

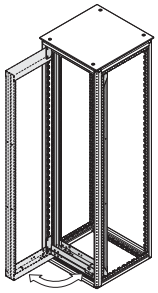

Height U	Usable height U	Width mm	Swing frame 120° Swing frame 120° 01005070 St, 2 mm, RAL 7021, load-carrying capacity 150 kg, 120° hinge, square locks incl. 2 keys (Dimension drawings link) assembled	Stop 120° 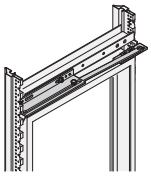 01005061 St; for safety reasons a swing frame stop is recommended PU 1 kit assembled	Swing frame 160° Swing frame 160° 01005070 St, 2 mm, RAL 7021, load-carrying capacity 150 kg, 160° hinge, square locks incl. 2 keys PU 2 pieces assembled	Stop 160° 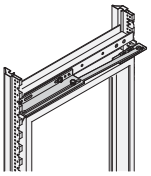 01005061 St, swing frame stop is recommended for safety reasons PU 1 kit assembled	Swing frame trim Asymmetrical assembly 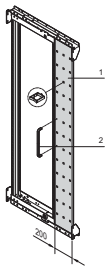 01005058 St, 1.5 mm, RAL 7021, trim (item 1, width 200 mm) incl. handle (item 2) and cut-out for cable eyes 1 piece assembled	Symmetrical assembly 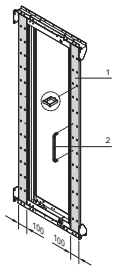 01005057 St, 1.5 mm, RAL 7021, trim (item 1, 2 x width 100 mm) incl. handle (item 2) and cut-out for cable eyes PU 2 pieces assembled	Safety lock 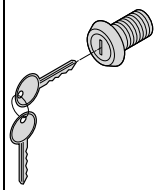 01015060 for swing frame, instead of square lock, incl. 2 keys 1 piece assembled
partial height	12	800	21130-747	23130-158	21130-761	23130-159	–	–	**60113-267**
partial height	21	800	21130-748	23130-158	21130-762	23130-159	21130-432	21130-442	**60113-267**
29	25	800	21130-749	23130-158	21130-763	23130-159	21130-433	21130-443	**60113-267**
33	30	800	21130-750	23130-158	21130-764	23130-159	21130-434	21130-444	**60113-267**
38	34	800	21130-751	23130-158	21130-765	23130-159	21130-435	21130-445	**60113-267**
42	39	800	21130-752	23130-158	21130-766	23130-159	21130-436	21130-446	**60113-267**
47	43	800	21130-753	23130-158	21130-767	23130-159	21130-437	21130-447	**60113-267**

Order Information

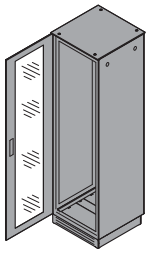

Completely in RAL 7021 (black grey)

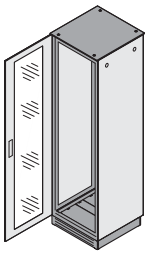

Colour combination RAL 7035 (light grey)/ RAL 7021 (black grey)

	Cabinet dimensions				Stationary shelf Full depth	Stationary shelf Shortened by 100 mm	Stationary shelf Depth member, 3 rows
					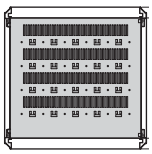 01004142	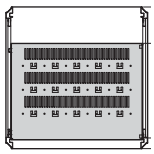 01004142	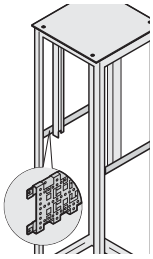 01004126
					St, 1.5 mm, static load-carrying capacity 75 kg, 1 U, incl. GND/ earthing	St, 1.5 mm, static load-carrying capacity 75 kg, 1 U, depth 479 mm, incl. GND/ earthing, for recessed installation please order depth member separately	length 460 mm, St, 1.5 mm, finish AlZn required for recessed shelf
No.	Height U	Height mm	Width mm	Depth mm	1 piece assembled	1 piece assembled	PU 1 pair assembled
Completely in RAL 7021					RAL 7021	RAL 7021	AlZn
1	29	1400	600	600	21130-323	21130-322	23130-081
2	29	1400	600	800	21130-325	21130-324	23130-082
3	33	1600	600	600	21130-323	21130-322	23130-081
4	33	1600	600	800	21130-325	21130-324	23130-082
5	38	1800	600	600	21130-323	21130-322	23130-081
6	38	1800	600	800	21130-325	21130-324	23130-082
7	38	1800	800	600	21130-333	21130-332	23130-081
8	42	2000	600	600	21130-323	21130-322	23130-081
9	42	2000	600	800	21130-325	21130-324	23130-082
10	42	2000	600	1000	21130-327	–	–
11	42	2000	800	600	21130-333	21130-332	23130-081
12	42	2000	800	800	21130-335	21130-334	23130-082
13	47	2200	600	600	21130-323	21130-322	23130-081
14	47	2200	600	800	21130-325	21130-324	23130-082
15	47	2200	600	1000	21130-327	–	–
16	47	2200	800	800	21130-335	21130-334	23130-082
Colour combinations					RAL 7035	RAL 7035	AlZn
17	29	1400	600	600	22130-323	22130-322	23130-081
18	29	1400	600	800	22130-325	22130-324	23130-082
19	33	1600	600	600	22130-323	22130-322	23130-081
20	33	1600	600	800	22130-325	22130-324	23130-082
21	38	1800	600	600	22130-323	22130-322	23130-081
22	38	1800	600	800	22130-325	22130-324	23130-082
23	38	1800	800	600	22130-333	22130-332	23130-081
24	42	2000	600	600	22130-323	22130-322	23130-081
25	42	2000	600	800	22130-325	22130-324	23130-082
26	42	2000	600	1000	22130-327	–	–
27	42	2000	800	600	22130-333	22130-332	23130-081
28	42	2000	800	800	22130-335	22130-334	23130-082
29	47	2200	600	600	22130-323	22130-322	23130-081
30	47	2200	600	800	22130-325	22130-324	23130-082
31	47	2200	600	1000	22130-327	–	–
32	47	2200	800	800	22130-335	22130-334	23130-082

Cabinets – VARISTAR EMC ServicePLUS

Interior mounting Telescopic shelves, 70 kg

Order Information

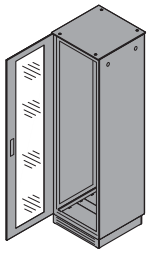

Completely in RAL 7021 (black grey)

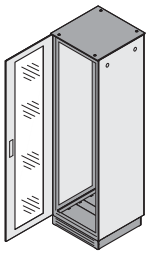

Colour combination RAL 7035 (light grey)/ RAL 7021 (black grey)

					Telescopic shelf, 2 U				
					Full depth	Shortened by 100 mm	Mounting bracket	T-bar lock	GND/earthing
					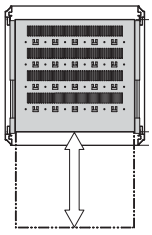 01004144	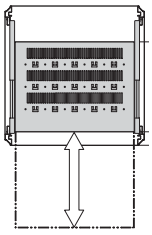 01004145	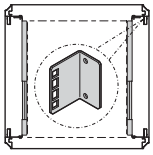 01005054	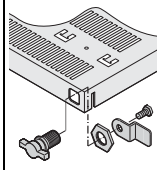 01004125	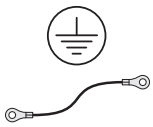 05904052
					St, 1.5 mm, static load-carrying capacity 70/50 kg (width 600/ 800 mm), incl. telescopic slide, please order mounting bracket separately	St, 1.5 mm, static load-carrying capacity 70/50 kg (width 600/ 800 mm), incl. telescopic slide, please order mounting bracket separately	St, finish AlZn	to lock the telescopic shelf	for telescopic shelf
	Cabinet dimensions								
No.	Height U	mm	Width mm	Depth mm	1 piece assembled	1 piece assembled	PU 4 pieces assembled	1 piece assembled	PU 1 kit assembled
Completely in RAL 7021					RAL 7021	RAL 7021	AlZn		
1	29	1400	600	600	21130-353	21130-352	23130-274	23130-092	23130-140
2	29	1400	600	800	21130-355	21130-354			
3	33	1600	600	600	21130-353	21130-352	23130-274	23130-092	23130-140
4	33	1600	600	800	21130-355	21130-354			
5	38	1800	600	600	21130-353	21130-352	23130-274	23130-092	23130-140
6	38	1800	600	800	21130-355	21130-354			
7	38	1800	800	600	21130-373	21130-372	23130-274	23130-092	23130-140
8	42	2000	600	600	21130-353	21130-352	23130-274	23130-092	23130-140
9	42	2000	600	800	21130-355	21130-354			
10	42	2000	600	1000	–	–	–	–	–
11	42	2000	800	600	21130-373	21130-372	23130-274	23130-092	23130-140
12	42	2000	800	800	21130-375	21130-374			
13	47	2200	600	600	21130-353	21130-352	23130-274	23130-092	23130-140
14	47	2200	600	800	21130-355	21130-354			
15	47	2200	600	1000	–	–	–	–	–
16	47	2200	800	800	21130-375	21130-374	23130-274	23130-092	23130-140
Colour combinations					RAL 7035	RAL 7035	AlZn		
17	29	1400	600	600	22130-353	22130-352	23130-274	23130-092	23130-140
18	29	1400	600	800	22130-355	22130-354			
19	33	1600	600	600	22130-353	22130-352	23130-274	23130-092	23130-140
20	33	1600	600	800	22130-355	22130-354			
21	38	1800	600	600	22130-353	22130-352	23130-274	23130-092	23130-140
22	38	1800	600	800	22130-355	22130-354			
23	38	1800	800	600	22130-373	22130-372	23130-274	23130-092	23130-140
24	42	2000	600	600	22130-353	22130-352	23130-274	23130-092	23130-140
25	42	2000	600	800	22130-355	22130-354			
26	42	2000	600	1000	–	–	–	–	–
27	42	2000	800	600	22130-373	22130-372	23130-274	23130-092	23130-140
28	42	2000	800	800	22130-375	22130-374			
29	47	2200	600	600	22130-353	22130-352	23130-274	23130-092	23130-140
30	47	2200	600	800	22130-355	22130-354			
31	47	2200	600	1000	–	–	–	–	–
32	47	2200	800	800	22130-375	22130-374	23130-274	23130-092	23130-140

Interior mounting 19" shelves 1 U, stationary 75 kg, telescopic 30 kg

Order Information

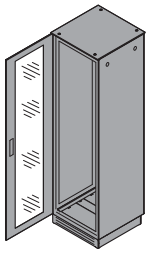

Completely in RAL 7021 (black grey)

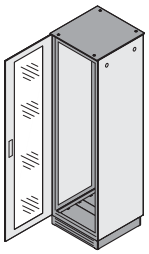

Colour combination RAL 7035 (light grey)/ RAL 7021 (black grey)

Dimension Standard fitting

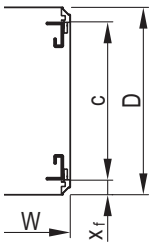

01004146

x_f = distance from front
c = pitch of 19" panel/slide mounts
D = cabinet depth
W = cabinet width

19" stationary shelf, 1 U, 75 kg

Full depth

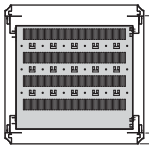

01004118

St, 1.5 mm, static load-carrying capacity 75 kg, depth 600 mm, incl. GND/ earthing

Shortened by 100 mm

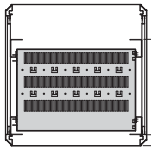

01004119

St, 1.5 mm, static load-carrying capacity 75 kg, depth 500 mm, incl. GND/ earthing

19" telescopic shelf, 1 U, 30 kg

Full depth

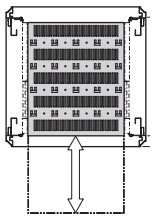

01004123

St, 1.5 mm, static load-carrying capacity 30 kg, incl. telescopic slide; please order GND/earthing kit separately

Shortened by 100 mm

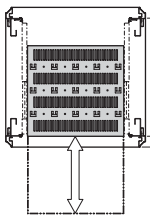

01004122

St, 1.5 mm, static load-carrying capacity 30 kg, incl. telescopic slide; please order GND/earthing kit separatelyy

GND/earthing

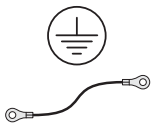

05904052

for telescopic shelf

No.	Cabinet dimensions Height U	Height mm	Width mm	Depth mm	x_f mm	c mm	19" stationary shelf, 1 U, 75 kg, Full depth, 1 piece assembled	19" stationary shelf, 1 U, 75 kg, Shortened by 100 mm, 1 piece assembled	19" telescopic shelf, 1 U, 30 kg, Full depth, 1 piece assembled	19" telescopic shelf, 1 U, 30 kg, Shortened by 100 mm, 1 piece assembled	GND/earthing, PU 1 kit assembled
Completely in RAL 7021							RAL 7021	RAL 7021	RAL 7021	RAL 7021	
1	29	1400	600	600	50	500	21130-303	21130-302	21130-343	21130-342	23130-140
2	29	1400	600	800	50	700	21130-305	21130-304	21130-345	21130-344	
3	33	1600	600	600	50	500	21130-303	21130-302	21130-343	21130-342	23130-140
4	33	1600	600	800	50	700	21130-305	21130-304	21130-345	21130-344	
5	38	1800	600	600	50	500	21130-303	21130-302	21130-343	21130-342	23130-140
6	38	1800	600	800	50	700	21130-305	21130-304	21130-345	21130-344	
7	38	1800	800	600	50	500	21130-303	21130-302	21130-343	21130-342	23130-140
8	42	2000	600	600	50	500	21130-303	21130-302	21130-343	21130-342	23130-140
9	42	2000	600	800	50	700	21130-305	21130-304	21130-345	21130-344	
10	42	2000	600	1000	70	740	21130-309	–	–	–	–
11	42	2000	800	600	50	500	21130-303	21130-302	21130-343	21130-342	23130-140
12	42	2000	800	800	150	500	21130-303	21130-302	21130-343	21130-342	
13	47	2200	600	600	50	500	21130-303	21130-302	21130-343	21130-342	23130-140
14	47	2200	600	800	50	700	21130-305	21130-304	21130-345	21130-344	
15	47	2200	600	1000	70	740	21130-309	–	–	–	–
16	47	2200	800	800	150	500	21130-303	21130-302	21130-343	21130-342	23130-140
Colour combinations							RAL 7035	RAL 7035	RAL 7035	RAL 7035	
17	29	1400	600	600	50	500	22130-303	22130-302	22130-343	22130-342	23130-140
18	29	1400	600	800	50	700	22130-305	22130-304	22130-345	22130-344	
19	33	1600	600	600	50	500	22130-303	22130-302	22130-343	22130-342	23130-140
20	33	1600	600	800	50	700	22130-305	22130-304	22130-345	22130-344	
21	38	1800	600	600	50	500	22130-303	22130-302	22130-343	22130-342	23130-140
22	38	1800	600	800	50	700	22130-305	22130-304	22130-345	22130-344	
23	38	1800	800	600	50	500	22130-303	22130-302	22130-343	22130-342	23130-140
24	42	2000	600	600	50	500	22130-303	22130-302	22130-343	22130-342	23130-140
25	42	2000	600	800	50	700	22130-305	22130-304	22130-345	22130-344	
26	42	2000	600	1000	70	740	22130-309	–	–	–	–
27	42	2000	800	600	50	500	22130-303	22130-302	22130-343	22130-342	23130-140
28	42	2000	800	800	150	500	22130-303	22130-302	22130-343	22130-342	
29	47	2200	600	600	50	500	22130-303	22130-302	22130-343	22130-342	23130-140
30	47	2200	600	800	50	700	22130-305	22130-304	22130-345	22130-344	
31	47	2200	600	1000	70	740	22130-309	–	–	–	–
32	47	2200	800	800	150	500	22130-303	22130-302	22130-343	22130-342	23130-140

Cabinets – VARISTAR EMC ServicePLUS

Interior mounting 19" telescopic shelves, 2 U, 70 kg

Order Information

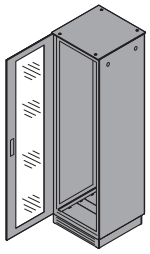

Completely in RAL 7021 (black grey)

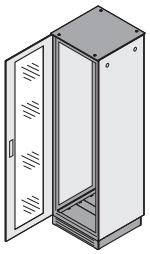

Colour combination RAL 7035 (light grey)/ RAL 7021 (black grey)

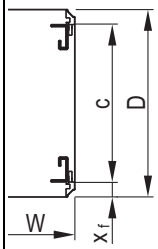

01004146

x_f = distance from front
c = pitch of 19" panel/slide mounts
D = cabinet depth
W = cabinet width

	Cabinet dimensions				Dimension		Shelf, telescopic, 2 U, 70 kg			
					Standard fitting		Full depth	Shortened by 100 mm	T-bar lock	GND/earthing
	Height		Width	Depth	x_f	c	1 piece	1 piece	1 piece	PU 1 kit
No.	U	mm	mm	mm	mm	mm	assembled	assembled	assembled	assembled
Completely in RAL 7021							RAL 7021	RAL 7021		
1	29	1400	600	600	50	500	21130-353	21130-352	23130-092	23130-140
2	29	1400	600	800	50	700	21130-355	21130-354		
3	33	1600	600	600	50	500	21130-353	21130-352	23130-092	23130-140
4	33	1600	600	800	50	700	21130-355	21130-354		
5	38	1800	600	600	50	500	21130-353	21130-352	23130-092	23130-140
6	38	1800	600	800	50	700	21130-355	21130-354		
7	38	1800	800	600	50	500	21130-353	21130-352	23130-092	23130-140
8	42	2000	600	600	50	500	21130-353	21130-352	23130-092	23130-140
9	42	2000	600	800	50	700	21130-355	21130-354		
10	42	2000	600	1000	70	740	–	–	–	–
11	42	2000	800	600	50	500	21130-353	21130-352	23130-092	23130-140
12	42	2000	800	800	150	500	21130-353	21130-352		
13	47	2200	600	600	50	500	21130-353	21130-352	23130-092	23130-140
14	47	2200	600	800	50	700	21130-355	21130-354		
15	47	2200	600	1000	70	740	–	–	–	–
16	47	2200	800	800	150	500	21130-353	21130-352	23130-092	23130-140
Colour combinations							RAL 7035	RAL 7035		
17	29	1400	600	600	50	500	22130-353	22130-352	23130-092	23130-140
18	29	1400	600	800	50	700	22130-355	22130-354		
19	33	1600	600	600	50	500	22130-353	22130-352	23130-092	23130-140
20	33	1600	600	800	50	700	22130-355	22130-354		
21	38	1800	600	600	50	500	22130-353	22130-352	23130-092	23130-140
22	38	1800	600	800	50	700	22130-355	22130-354		
23	38	1800	800	600	50	500	22130-353	22130-352	23130-092	23130-140
24	42	2000	600	600	50	500	22130-353	22130-352	23130-092	23130-140
25	42	2000	600	800	50	700	22130-355	22130-354		
26	42	2000	600	1000	70	740	–	–	–	–
27	42	2000	800	600	50	500	22130-353	22130-352	23130-092	23130-140
28	42	2000	800	800	150	500	22130-353	22130-352		
29	47	2200	600	600	50	500	22130-353	22130-352	23130-092	23130-140
30	47	2200	600	800	50	700	22130-355	22130-354		
31	47	2200	600	1000	70	740	–	–	–	–
32	47	2200	800	800	150	500	22130-353	22130-352	23130-092	23130-140

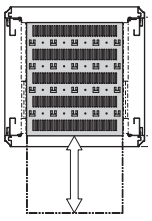

01004123

St, 1.5 mm, RAL 7021, static load-carrying capacity 70 kg, width 417 mm, depth 482 mm, incl. telescopic slide, please order T-bar lock and earthing kit separately

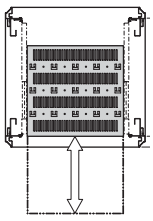

01004122

St, 1.5 mm, RAL 7021, static load-carrying capacity 70 kg, width 400 mm, depth 682 mm, incl. telescopic slide, please order T-bar lock and earthing kit separately

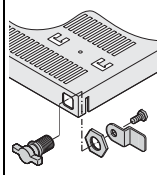

01004125

to lock the telescopic shelf

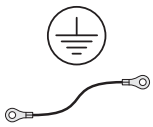

05904052

for telescopic shelf

Order Information

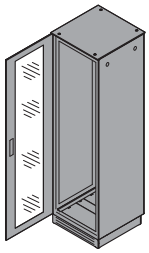

Completely in RAL 7021 (black grey)

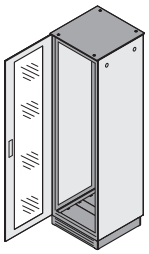

Colour combination RAL 7035 (light grey)/ RAL 7021 (black grey)

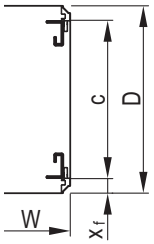

x_f = distance from front
c = pitch of 19" panel/slide mounts
D = cabinet depth
W = cabinet width

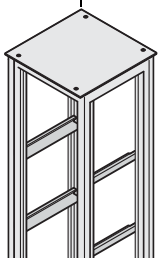

St, 1.5 mm, finish AlZn, static load-carrying capacity 25 kg/ pair

St, 2.5 mm, zinc-plated, static load-carrying capacity 100 kg/ pair

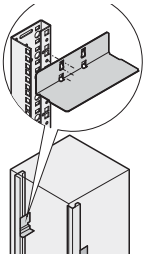

St, 1.5 mm, finish AlZn, static load-carrying capacity 15 kg/ pair

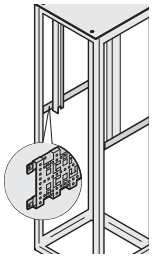

length 460 mm, St, 1.5 mm, finish AlZn required for shortened shelf

	Cabinet dimensions						Dimension Standard fitting		Slide rail 25 kg	Slide rail 100 kg	Short slide rail	Depth member, 3 rows
No.	Height U	Height mm	Width mm	Depth mm			x_f mm	c mm	PU 2 pieces supplied loose	PU 2 pieces supplied loose	PU 1 kit supplied loose	PU 1 pair assembled
Completely in RAL 7021									AlZn	zinc-plated	AlZn	AlZn
1	29	1400	600	600			50	500	23130-096	23130-118	23130-094	23130-081
2	29	1400	600	800			50	700	23130-097	23130-119		23130-082
3	33	1600	600	600			50	500	23130-096	23130-118	23130-094	23130-081
4	33	1600	600	800			50	700	23130-097	23130-119		23130-082
5	38	1800	600	600			50	500	23130-096	23130-118	23130-094	23130-081
6	38	1800	600	800			50	700	23130-097	23130-119		23130-082
7	38	1800	800	600			50	500	23130-096	23130-118	23130-094	23130-081
8	42	2000	600	600			50	500	23130-096	23130-118	23130-094	23130-081
9	42	2000	600	800			50	700	23130-097	23130-119		23130-082
10	42	2000	600	1000			70	740	23130-098	23130-120		23130-084
11	42	2000	800	600			50	500	23130-096	23130-118	23130-094	23130-081
12	42	2000	800	800			150	500	23130-096	23130-118		23130-082
13	47	2200	600	600			50	500	23130-096	23130-118	23130-094	23130-081
14	47	2200	600	800			50	700	23130-097	23130-119		23130-082
15	47	2200	600	1000			70	740	23130-098	23130-120		23130-084
16	47	2200	800	800			150	500	23130-096	23130-118	23130-094	23130-082
Colour combinations									AlZn	verzinkt	AlZn	AlZn
17	29	1400	600	600			50	500	23130-096	23130-118	23130-094	23130-081
18	29	1400	600	800			50	700	23130-097	23130-119		23130-082
19	33	1600	600	600			50	500	23130-096	23130-118	23130-094	23130-081
20	33	1600	600	800			50	700	23130-097	23130-119		23130-082
21	38	1800	600	600			50	500	23130-096	23130-118	23130-094	23130-081
22	38	1800	600	800			50	700	23130-097	23130-119		23130-082
23	38	1800	800	600			50	500	23130-096	23130-118	23130-094	23130-081
24	42	2000	600	600			50	500	23130-096	23130-118	23130-094	23130-081
25	42	2000	600	800			50	700	23130-097	23130-119		23130-082
26	42	2000	600	1000			70	740	23130-098	23130-120		23130-084
27	42	2000	800	600			50	500	23130-096	23130-118	23130-094	23130-081
28	42	2000	800	800			150	500	23130-096	23130-118		23130-082
29	47	2200	600	600			50	500	23130-096	23130-118	23130-094	23130-081
30	47	2200	600	800			50	700	23130-097	23130-119		23130-082
31	47	2200	600	1000			70	740	23130-098	23130-120		23130-084
32	47	2200	800	800			150	500	23130-096	23130-118	23130-094	23130-082

Cabinets – VARISTAR EMC ServicePLUS

Interior mounting Cable ductings

Order Information

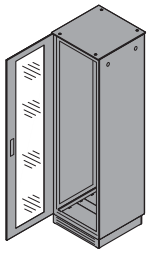

Completely in RAL 7021 (black grey)

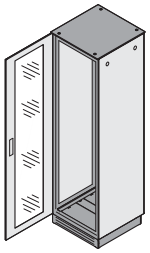

Colour combination RAL 7035 (light grey)/ RAL 7021 (black grey)

	Cabinet dimensions				Cable ducting with C-profile				Cable tie	Velcro
					C-rail for cabinet depth	C-rail for cabinet width	Slide nut	Cable shell		
					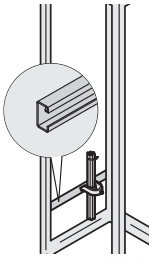 01006109	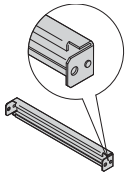 01006107	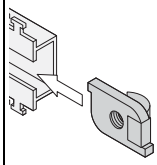 01504054	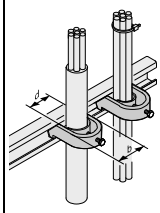 vnt009	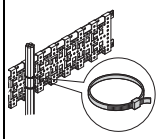 01005078	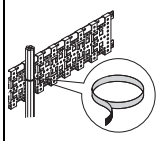 01005079
					St, 1.5 mm, finish AlZn	St, 1.5 mm, finish AlZn	for C-rail	for C-rail or for cable support rail, for cable bundles of 42 ... 46 mm ; further dimensions see page 1.66	plastic, 92 mm x 2.5 mm; further dimensions see page 1.67	black, length 300 mm
						AlZn				
No.	Height U	mm	Width mm	Depth mm	PU 2 pieces supplied loose	PU 2 pieces supplied loose	PU 10 pieces supplied loose	PU 10 pieces supplied loose	PU 25 pieces supplied loose	PU 10 pieces supplied loose
Completely in RAL 7021					AlZn	AlZn				
1	29	1400	600	600	23130-086	23130-333	21120-140	20114-731	20118-351	20118-624
2	29	1400	600	800	23130-087					
3	33	1600	600	600	23130-086	23130-333	21120-140	20114-731	20118-351	20118-624
4	33	1600	600	800	23130-087					
5	38	1800	600	600	23130-086	23130-333	21120-140	20114-731	20118-351	20118-624
6	38	1800	600	800	23130-087					
7	38	1800	800	600	23130-086	23130-334	21120-140	20114-731	20118-351	20118-624
8	42	2000	600	600	23130-086	23130-333	21120-140	20114-731	20118-351	20118-624
9	42	2000	600	800	23130-087					
10	42	2000	600	1000	23130-089					
11	42	2000	800	600	23130-086	23130-334	21120-140	20114-731	20118-351	20118-624
12	42	2000	800	800	23130-087					
13	47	2200	600	600	23130-086	23130-333	21120-140	20114-731	20118-351	20118-624
14	47	2200	600	800	23130-087					
15	47	2200	600	1000	23130-089					
16	47	2200	800	800	23130-087	23130-334	21120-140	20114-731	20118-351	20118-624
Colour combinations					AlZn	AlZn				
17	29	1400	600	600	23130-086	23130-333	21120-140	20114-731	20118-351	20118-624
18	29	1400	600	800	23130-087					
19	33	1600	600	600	23130-086	23130-333	21120-140	20114-731	20118-351	20118-624
20	33	1600	600	800	23130-087					
21	38	1800	600	600	23130-086	23130-333	21120-140	20114-731	20118-351	20118-624
22	38	1800	600	800	23130-087					
23	38	1800	800	600	23130-086	23130-334	21120-140	20114-731	20118-351	20118-624
24	42	2000	600	600	23130-086	23130-333	21120-140	20114-731	20118-351	20118-624
25	42	2000	600	800	23130-087					
26	42	2000	600	1000	23130-089					
27	42	2000	800	600	23130-086	23130-334	21120-140	20114-731	20118-351	20118-624
28	42	2000	800	800	23130-087					
29	47	2200	600	600	23130-086	23130-333	21120-140	20114-731	20118-351	20118-624
30	47	2200	600	800	23130-087					
31	47	2200	600	1000	23130-089					
32	47	2200	800	800	23130-087	23130-334	21120-140	20114-731	20118-351	20118-624

General components

Mechanics

from page 3.2

Electrics

from page 3.29

Power distribution

from page 3.50

Climate control

from page 4.0

. . . .

Content

Cabinets 1

Wall mounted cases 2

Accessories for cabinets and wall mounted cases . 3

Climate control . 4

Electronics cases 5

Subracks/ 19" chassis 6

Front panels, plug-in units . . . 7

Systems 8

Power supply units 9

Backplanes . . . 10

Connectors, front panel component system 11

Appendix 12

Cabinets – VARISTAR Seismic

01008007

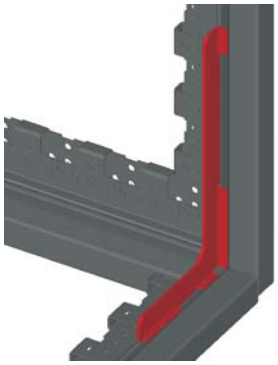

01008062

Welded basic frame with strengthening brackets

01008008

Bellcore test in laboratory

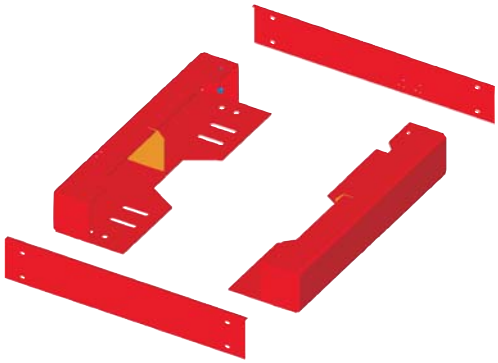

01008063

Seismic base with NEBS fixing

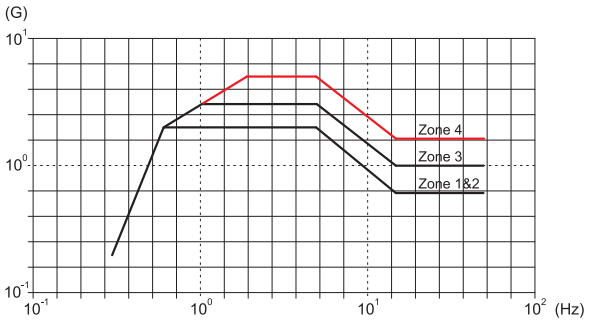

01005083

Test results

Cabinets – VARISTAR Seismic

Overview 1.84

The earthquake-resistant cabinet

- Earthquake resistance tested to Bellcore zone 4 with a dynamic load-carrying capacity of 250 kg
- Customised solutions with higher loading are available
- Optional EMC shielding up to 60 dB at 1 GHz, 40 dB at 3 GHz

01005018

Seismic cabinets off-the-shelf

- Earthquake-resistant up to Bellcore Zone 4
- Versions
  - IP 20
  - IP 55 with EMC shielding

30407004

ServicePLUS from page 1.96

e.g. individual configuration and assembly
e.g. modifications (cut-outs, special colours)
e.g. custom solutions (special sizes)

www.schroff.biz/ServicePLUS

VARISTAR
Platform 1.4
Dimensions 1.8

VARISTAR Seismic
IP 20 ..... 1.86
IP 55 and EMC ... 1.87

Accessories
19" panel/slide mount 1.88
19" fixing materials kit, M6 ..... 1.88
Slide rails 1.89
19" shelves 1.90
Depth members .. 1.93
C horizontal rails . 1.93
Cable ties, Velcro 1.95

ServicePLUS ... 1.96
IP 20 ..... 1.98
IP 55 ..... 1.102
EMC 1.106
Interior configuration 1.110

VARISTAR Electronics 1.10
VARISTAR EMC. 1.54
VARISTAR Datacom and Networking Technology 1.124
VARISTAR air/water heat exchanger 1.224

VARISTAR Seismic, IP 20

01005018

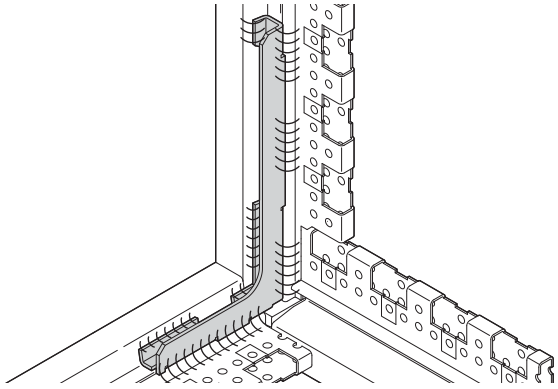

01005084

Welded basic frame with strengthening brackets

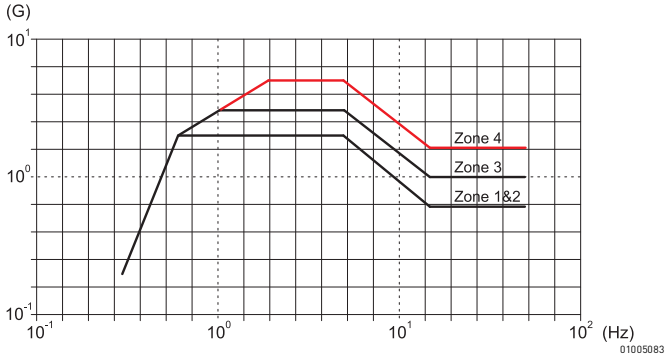

01005083

Bellcore test

- Earthquake-resistant up to Bellcore Zone 4
- Dynamic load-carrying capacity of 250 kg
- Doors with 3-point locking and screw-fixed side panels
- Static load-carrying capacity 800 kg (Heavy-Duty)

Delivery comprises (assembled)

Item	Qty	Description
1	1	Welded basic frame, Heavy-Duty, St profile, RAL 7021, with strengthening brackets
2	1	Earthquake base, St, RAL 7021
3	1	Top cover, raised, St, RAL 7021
4	1	Front door, St, RAL 7035, 180° hinge, 3-point locking, lever handle
5	1	Rear panel, screw fixed, St, RAL 7035
6	2	Side panel, screw fixed, St, RAL 7035
7	1	Base plate, multi-piece, St, RAL 7021, open at the rear
8	2	19" panel/slide mount with EIA cut-outs, AlZn, assembled at front, depth-adjustable in 25 mm increments
9	1	GND/earthing kit, enclosed loose

Order Information

Height U	Height H mm	Width W mm	Depth D mm	Part no.
38	1900	600	800	10130-189
42	2100	600	600	**10130-023**
42	2100	600	800	10130-188
DIN profile half cylinder, common locking for lever handle (1 key fits all locks) incl. 2 keys				**25127-995**
Lifting eye for raised top cover PU 4 pieces				**23130-085**

Note

- Other dimensions and versions available on request
- For assembly of shelves and slide rails another pair of panel/slide mounts is necessary, see page 1.88

ServicePLUS see page 1.96

Cabinets – VARISTAR Seismic

VARISTAR Seismic, IP 55 and EMC

- Earthquake secure (up) to Bellcore Zone 4
- Shielding 60 dB at 1 GHz, 40 dB at 3 GHz (tested to IEC 61587-3)
- Dynamic load-carrying capacity of 250 kg
- Doors with 4-point locking and screw-fixed side panels
- Static load-carrying capacity 800 kg (Heavy-Duty)

Delivery comprises (assembled)

Item	Qty	Description
1	1	Welded basic frame, Heavy-Duty, St profile, RAL 7021, with strengthening brackets
2	1	Earthquake base, St, RAL 7021
3	1	EMC, flat top cover, flush, St, finish AlZn, exterior RAL 7021
4	1	Front door, St, finish AlZn, powder-coated RAL 7035, 180° hinge, 4-point locking, lever handle
5	1	Rear panel, screw fixed, St, finish AlZn, powder-coated RAL 7035
6	2	Side panel, screw fixed, St, finish AlZn, powder-coated RAL 7035
7	1	Base plate, one-piece, St, finish AlZn
8	2	19" panel/slide mount with EIA perforation, St, finish AlZn, front mounted, depth-adjustable in 25 mm increments
9	1	GND/earthing kit, enclosed loose

Order Information

Height U	Height H mm	Width W mm	Depth D mm	Part no.
42	2100	600	800	10130-195
DIN profile half cylinder, common locking for lever handle (1 key fits all locks) incl. 2 keys				**25127-995**
Lifting eye for top cover PU 4 pieces				**23130-072**

Note

- Other dimensions and versions available on request
- For assembly of shelves and slide rails another pair of panel/slide mounts is necessary, see page 1.88

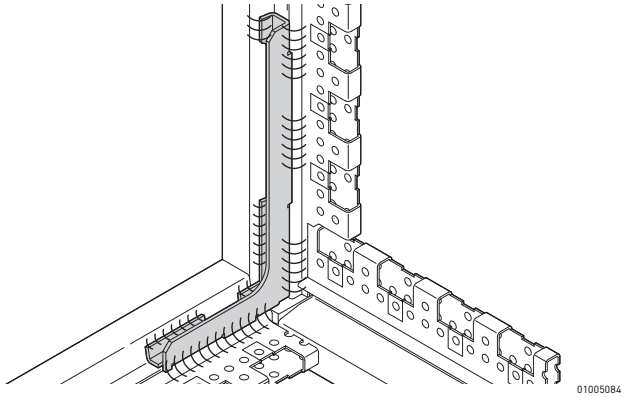

Welded basic frame with strengthening brackets

Shielding: Tested to IEC 61587-3, standard dimensions of test object 2000 x 600 x 600 mm

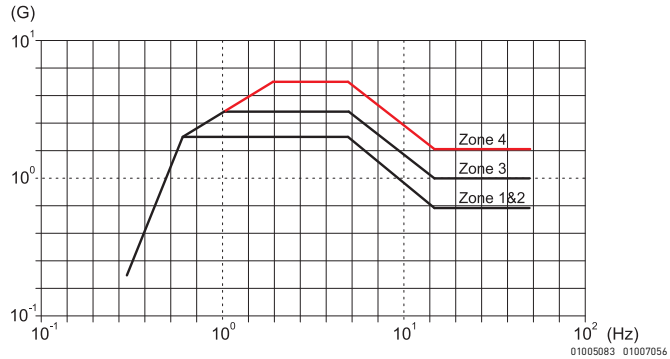

Bellcore test

ServicePLUS see page 1.96

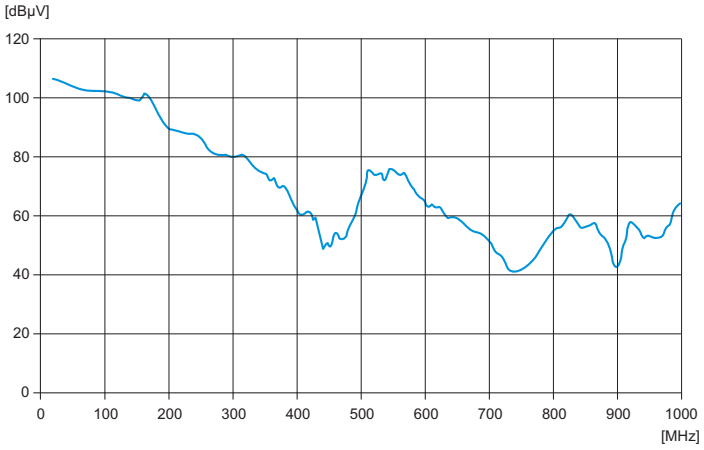

19" panel/slide mount with universal pitch (EIA)

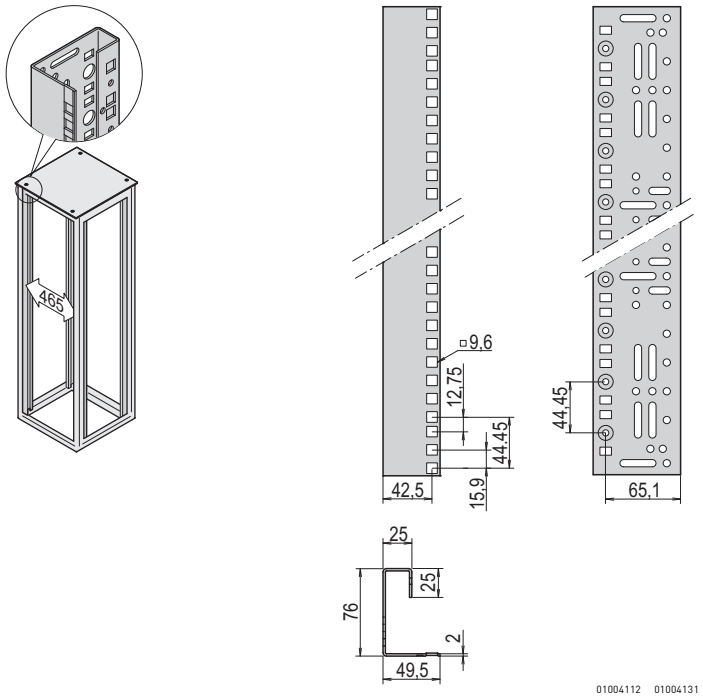

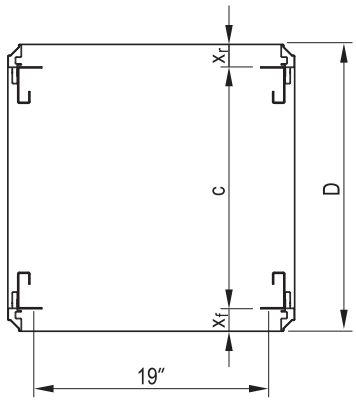

Standard assembly dimension $x_r = x_f = 50$ mm

- Assembly in 600 mm wide cabinets directly on the frame
- Depth-adjustable in 25 mm increments
- In accordance with IEC 60297-1 (DIN 41 494, part 1)

Delivery comprises

Item	Qty	Description
1	2	19" panel/slide mount, St, 1.75 mm, finish AlZn, RAL 7035 or RAL 7021
2	1	Assembly kit, incl. GND/earthing

Order Information

For cabinet height mm	Usable height U	Length mm	AlZn Part no.	RAL 7035 Part no.	RAL 7021 Part no.
Partial-height mounting	8	395	**23130-037**	**23130-027**	**23130-017**
Partial-height mounting	12	545	**23130-038**	**23130-028**	**23130-018**
Partial-height mounting	16	745	**23130-039**	**23130-029**	**23130-019**
Partial-height mounting	20	895	**23130-040**	**23130-030**	**23130-020**
Partial-height mounting	24	1095	**23130-031**	**23130-021**	**23130-011**
1400	29	1295	**23130-032**	**23130-022**	**23130-012**
1600	33	1495	**23130-033**	**23130-023**	**23130-013**
1800	38	1695	**23130-034**	**23130-024**	**23130-014**
2000	42	1895	**23130-035**	**23130-025**	**23130-015**
Dimensioning strip for 19" panel mounts, paper, white, serial numbered from 1 ... 47 U, PU 4 pieces					**25127-997**

Note

- For 19" partial-height mounting depth members are necessary
- Metric panel/slide mounts available on request

19" assembly kit, M6

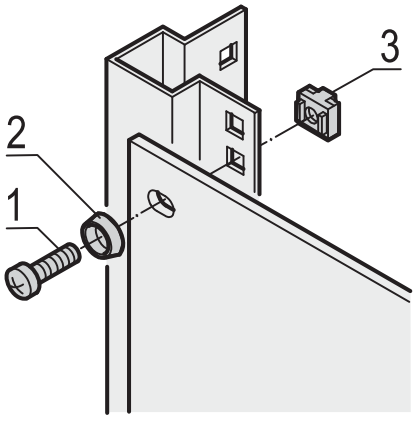

- For front panels, distribution fields and other components

Delivery comprises

Item	Description
1	Panhead screw, M6 x 16, St, zinc-plated
2	Plastic washer, black
3	Cage nut, M6, St, zinc-plated

Order Information

Description	Qty/PU	Part no.
19" assembly kit (screw, washer, nut)	50	**21101-809**
19" assembly kit (screw, washer, nut)	100	**21101-810**

Cabinets – VARISTAR Seismic

Slide rails

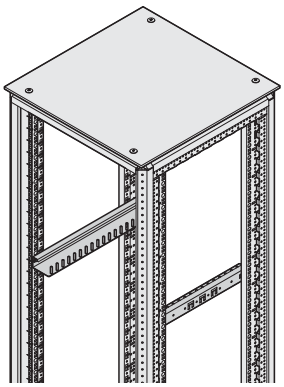

01004056

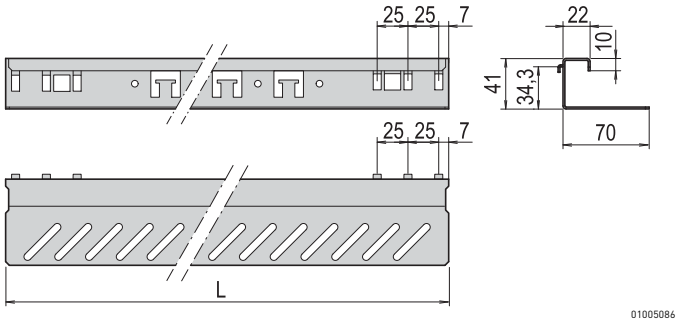

01005086

Static load-carrying capacity 25 kg

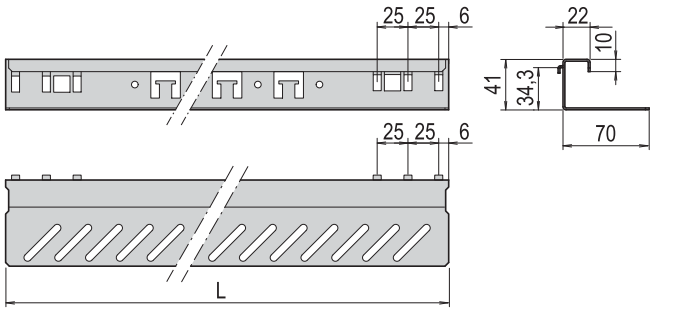

01004058

Static load-carrying capacity 100 kg

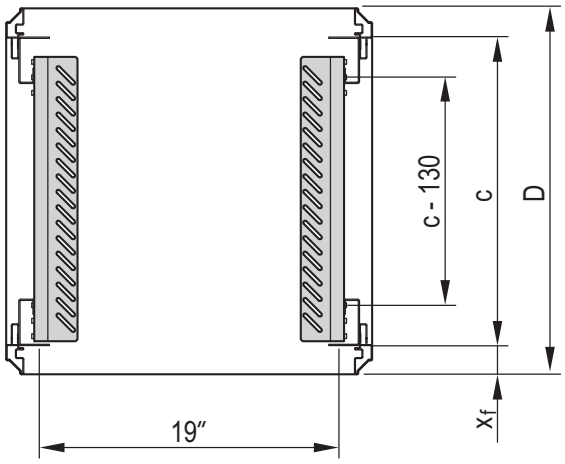

01004130

c = pitch of the 19" panel/slide mounts
x_f = standard dimension
D = cabinet depth

- For assembly on 19" panel/slide mounts
- Assembly in 1 U increments (snap-in, bolt-on)
- Wide support surface (48 mm)
- 2 versions
  - Static load-carrying capacity 25 kg per pair
  - Static load-carrying capacity 100 kg per pair

Delivery comprises

Item	Qty	Description
1	see Order information	Slide rail, AlZn, 1.5 mm (static load-carrying capacity 25 kg), or 2.5 mm (static load-carrying capacity 100 kg), zinc-plated
2	1	Assembly kit incl. GND/earthing

Order Information

Static load-carrying capacity 25 kg

For cabinet depth D mm	x_f mm	c mm	Length L mm	Qty/PU	Part no.
600	50	500	456	2	**23130-096**
600	50	500	456	10	**23130-101**
800	50	700	656	2	**23130-097**
800	50	700	656	10	**23130-102**

Order Information

Static load-carrying capacity 100 kg

For cabinet depth D mm	x_f mm	c mm	Length L mm	Qty/PU	Part no.
600	50	500	458	2	**23130-118**
600	50	500	458	10	**23130-123**
800	50	700	658	2	**23130-119**
800	50	700	658	10	**23130-124**

19'' stationary shelf, 75 kg

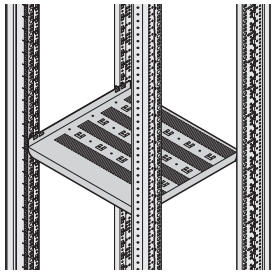

01004066

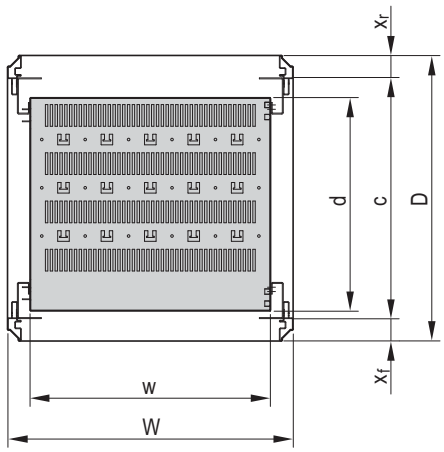

01004067

c = max. pitch of the 19" slide mounts
x_f, x_r = standard assembly dimension

- Static load-carrying capacity 75 kg (150 kg with strengthening rail)
- Mounting height 1 U, for mounting on four panel/slide mounts
- With hammer head perforation to fix cable ties

Delivery comprises

Item	Qty	Description
1	1	Perforated shelf, St, 1.5 mm (colour see Order Information)
2	1	Assembly kit incl. GND/earthing

Order Information

For cabinet depth	Usable surface w x d	x_f	c	RAL 7035	RAL 7021
mm	mm	mm	mm	Part no.	Part no.
600	495 x 442	50	500	22130-303	21130-303
800	495 x 642	50	700	22130-305	21130-305
Strengthening rail for stationary 19" shelf, PU 1 piece					23130-310

Note

- Cable ducting with cable ties, see page 1.95
- Other sizes, see ServicePLUS, page 1.114

Cabinets – VARISTAR Seismic

19" telescopic shelf, 30 kg

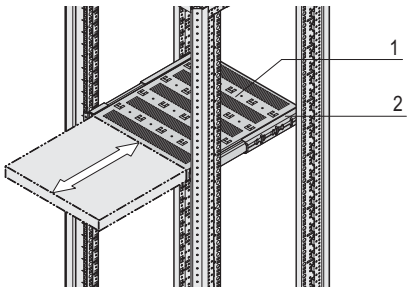

01004068

- Static load-carrying capacity at full extension 30 kg
- Mounting height 1 U, for mounting on four 19" panel/slide mounts
- Incl. telescopic slides
- Hammer head perforation to fix cable ties
- 2 versions
  - Full depth
  - Depth shortened by 100 mm for rear cable ducting

Delivery comprises

Item	Qty	Description
1	1	Perforated shelf, St, 1.5 mm (colour see Order Information)
2	2	Telescopic slide
3	1	Assembly kit

Order Information

Full depth

For cabinet depth	Usable surface w x d	x_f	c	RAL 7035	RAL 7021
mm	mm	mm	mm	Part no.	Part no.
600	417 x 482	50	500	**22130-343**	**21130-343**
800	417 x 682	50	700	**22130-345**	**21130-345**
GND/earthing for telescopic 19" shelf PU 1 kit, for VARISTAR					**23130-140**

Full depth

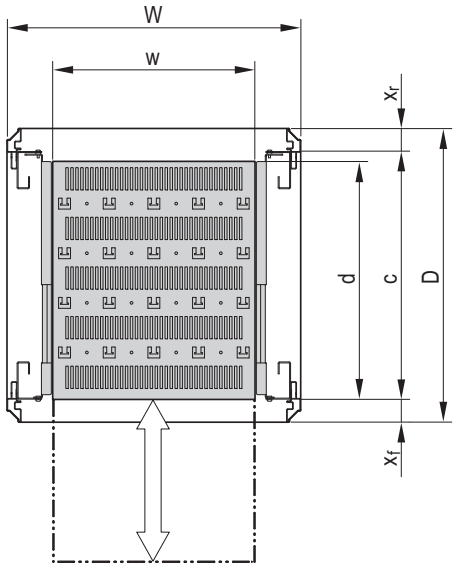

01004069

Note

- Cable ducting with cable ties, see page 1.95

Order Information

Shortened by 100 mm

For cabinet depth	Usable surface w x d	x_f	c	RAL 7035	RAL 7021
mm	mm	mm	mm	Part no.	Part no.
600	417 x 382	50	500	**22130-342**	**21130-342**
800	417 x 582	50	700	**22130-344**	**21130-344**
GND/earthing for telescopic 19" shelf PU 1 kit, for VARISTAR					**23130-140**

Shortened depth

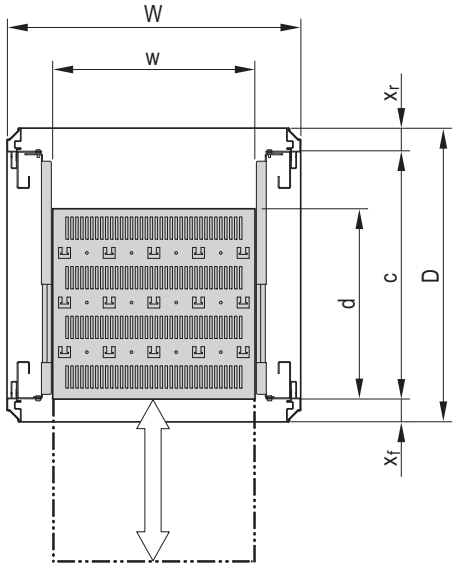

01004070

Note

- Cable ducting with cable ties, see page 1.95

c = max. pitch of the 19" panel/slide mounts
x_f, x_r = standard assembly dimension

19'' telescopic shelf, 70 kg

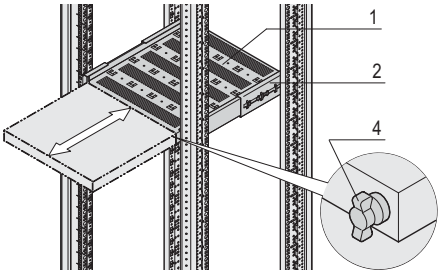

01004071

- Static load-carrying capacity at full extension 70 kg
- Mounting height 2 U, for mounting on four 19" panel/slide mounts
- Incl. telescopic slides
- Locking with T-bar lock possible
- Hammer head perforation to fix cable ties
- 2 versions
  - Full depth
  - Depth shortened by 100 mm for rear cable ducting

Full depth

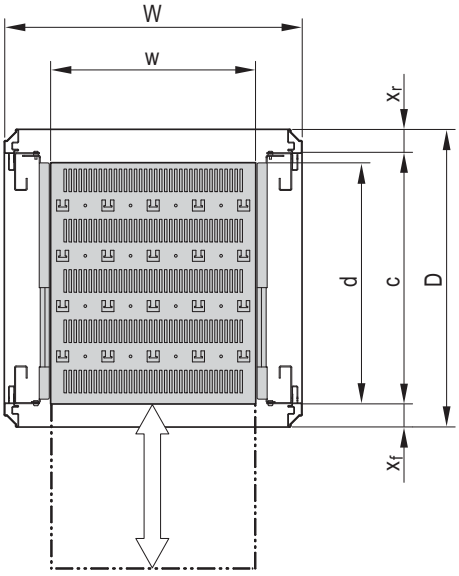

01004069

Shortened depth

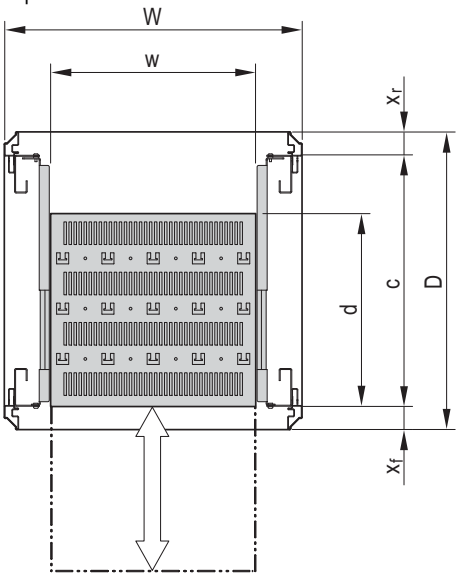

01004070

c = max. pitch of the 19" slide mounts
x_f, x_r = standard assembly dimension

Delivery comprises

Item	Qty	Description
1	1	Perforated shelf, St, 1.5 mm (colour see Order Information)
2	2	Telescopic slide
3	1	Assembly kit

Order Information

Full depth

For cabinet depth	Usable surface w x d	x_f	c	RAL 7035	RAL 7021
mm	mm	mm	mm	Part no.	Part no.
600	405 x 482	50	500	22130-353	21130-353
800	405 x 682	50	700	22130-355	21130-355
Item 4 T-bar lock for 1 telescopic shelf (can be mounted right or left), 1 piece					23130-092
GND/earthing for telescopic 19" shelf PU 1 kit, for VARISTAR					23130-140

Note

- Please order T-bar lock (item 4) separately
- Cable ducting with cable ties, see page 1.95

Order Information

Shortened by 100 mm

For cabinet depth	Usable surface w x d	x_f	c	RAL 7035	RAL 7021
mm	mm	mm	mm	Part no.	Part no.
600	405 x 382	50	500	22130-352	21130-352
800	405 x 582	50	700	22130-354	21130-354
Item 4 T-bar lock for 1 telescopic shelf (can be mounted right or left), 1 piece					23130-092
GND/earthing for telescopic 19" shelf PU 1 kit, for VARISTAR					23130-140

Note

- Please order T-bar lock (item 4) separately
- Cable ducting with cable ties, see page 1.95

Cabinets – VARISTAR Seismic

Depth member

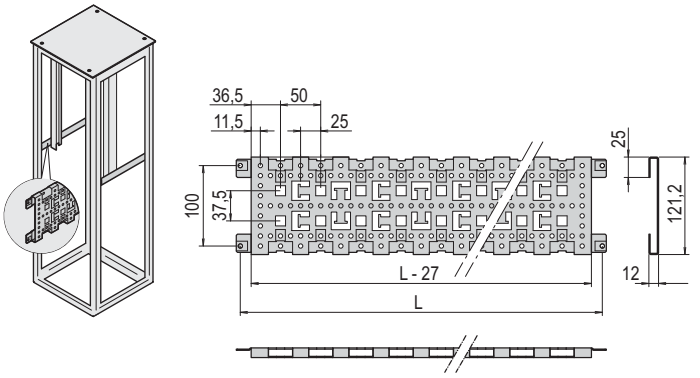

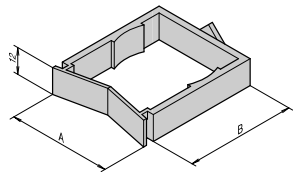

Cable eye

- For fitting shortened 19" panel/slide mounts and mounting plates
- Cable ducting by means of cable ties and cable eye

Delivery comprises

Item	Qty	Description
1	2	Depth member, St, 1.5 mm, finish AlZn
2	1	Assembly kit incl. GND/earthing

Order Information

For cabinet depth mm	Length L mm	Part no.
600	460	**23130-081**
800	660	**23130-082**
Cable eye A = 38 mm, B = 25 mm, PU 25 pieces		**21101-151**
Cable eye A = 47 mm, B = 50 mm, PU 25 pieces		**21101-150**

- Cable ducting with cable ties, see page 1.95

C-profile for the cabinet depth

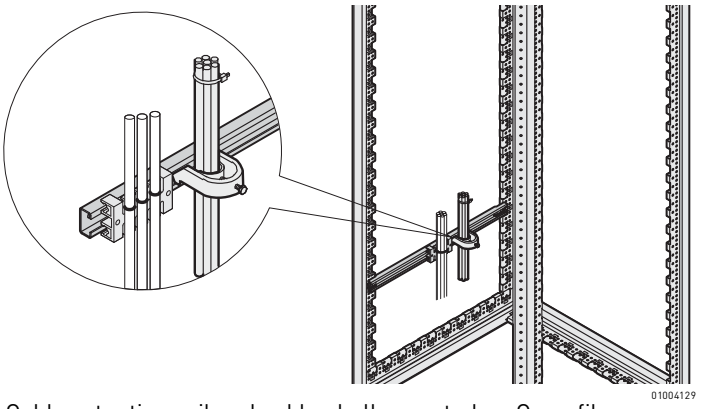

Cable retention rail and cable shell mounted on C-profile

Slide nut

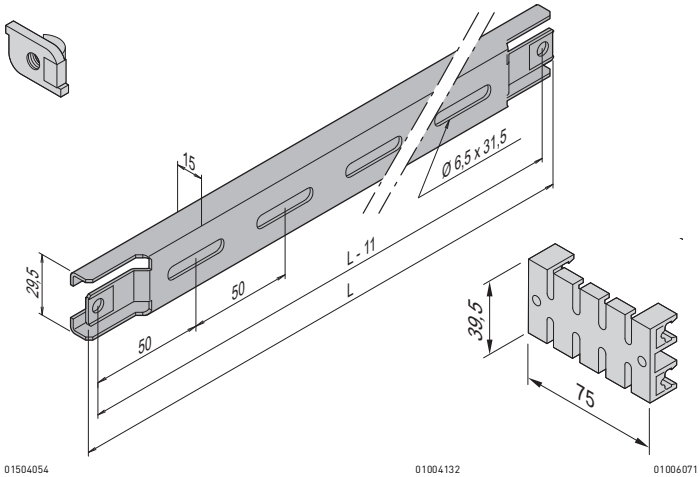

C-profile Cable retention rail

- For cable ducting in lateral area of cabinet
- For cable shells and cable retention rails

Delivery comprises

Item	Qty	Description
1	2	C-profile, St, 1.5 mm, AlZn
2	1	Assembly kit incl. GND/earthing

Order Information

For cabinet depth mm	Length L mm	Part no.
600	460	**23130-086**
800	660	**23130-087**
Accessories		
Cable retention rail for C-rail width 75 mm, length 39.5 mm, PU 5 pieces		**60118-472**
Cable shell for cable bundle 18 ... 22 mm, PU 10 pieces		**20118-775**
Cable shell for cable bundle 22 ... 26 mm, PU 10 pieces		**20118-776**
Cable shell for cable bundle 26 ... 30 mm, PU 10 pieces		**20118-777**
Cable shell for cable bundle 30 ... 34 mm, PU 10 pieces		**20114-728**
Cable shell for cable bundle 34 ... 38 mm, PU 10 pieces		**20114-729**
Cable shell for cable bundle 38 ... 42 mm, PU 10 pieces		**20114-730**
Cable shell for cable bundle 42 ... 46 mm, PU 10 pieces		**20114-731**
Cable shell for cable bundle 46 ... 50 mm, PU 10 pieces		20118-778
Slide nut for C-profile, PU 10 pieces		**21120-140**

Note

- Cable ties and Velcro for cable retention rail see page 1.95

C-profile for cabinet width

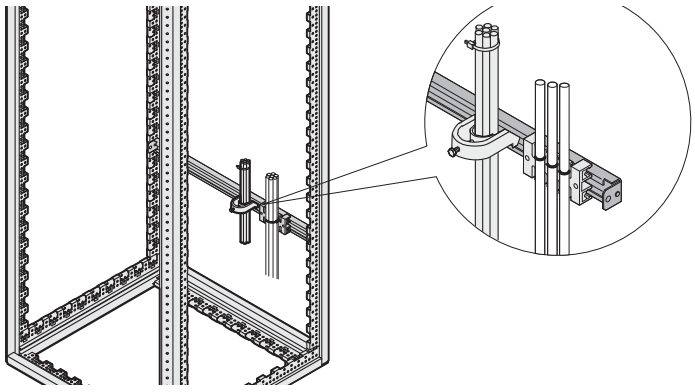

C-profile

Slide nut

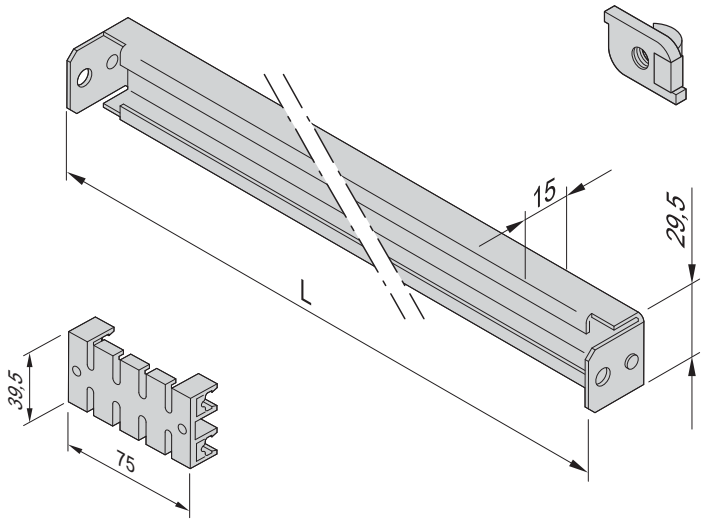

Cable retention rail

- For cable ducting in rear or front area of cabinet
- For cable shells and cable retention rails

Delivery comprises

Item	Qty	Description
1	2	C-profile, St, 1.5 mm, finish AlZn
2	1	Assembly kit incl. GND/earthing

Order Information

For cabinet width mm	Length mm	Part no.
600	550	**23130-333**
Accessories		
Cable retention rail for C-rail width 75 mm, length 39.5 mm, PU 5 pieces		**60118-472**
Cable shell for cable bundle 18 ... 22 mm, PU 10 pieces		**20118-775**
Cable shell for cable bundle 22 ... 26 mm, PU 10 pieces		**20118-776**
Cable shell for cable bundle 26 ... 30 mm, PU 10 pieces		**20118-777**
Cable shell for cable bundle 30 ... 34 mm, PU 10 pieces		**20114-728**
Cable shell for cable bundle 34 ... 38 mm, PU 10 pieces		**20114-729**
Cable shell for cable bundle 38 ... 42 mm, PU 10 pieces		**20114-730**
Cable shell for cable bundle 42 ... 46 mm, PU 10 pieces		**20114-731**
Cable shell for cable bundle 46 ... 50 mm, PU 10 pieces		20118-778
Slide nut for C-profile, PU 10 pieces		**21120-140**

Note

- Cable ties and Velcro for cable retention rail see page 1.95

Cabinet accessories – VARISTAR Seismic

Cable ties, Velcro

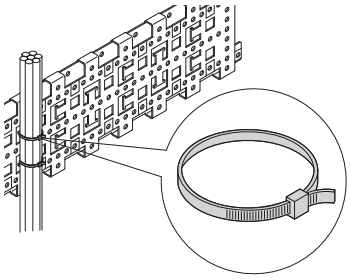

Cable tie

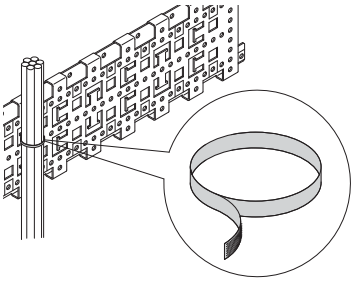

Velcro

- Fixing materials kit for cable ducting

Order Information

Description	Part no.
Cable tie, plastic, 92 mm x 2.5 mm, PU 25 pieces	**20118-351**
Cable tie, plastic, 186 mm x 5 mm, PU 25 pieces	**20118-352**
Cable tie, plastic, 360 mm x 5 mm, PU 25 pieces	**20118-353**
Velcro strip, PE/PA, black, length 300 mm, PU 10 pieces	**20118-624**

Cabinets – VARISTAR Seismic ServicePLUS

configuration

Components can be varied and combined freely

Simple. Fast. To the ideal product.

- Configuration tables from page 1.98
- Online configuration: www.schroff.co.uk/configuration

assembly

Fitting of all mechanical, electrical and electronic components by our specialists

Assembled by professionals. Double benefit!

- Without supplement
- Ready to despatch within 10 working days

modification

Custom drillings, cut-outs and special colours for off-the-shelf products

Small changes. Large impact.

- Download CAD data, modify and send back
- Ready for despatch within 10 working days

solution

Integration and custom developments

Simple. Fast. From one source.

- Climate control, complete construction, cabling (power supply), function testing
- Special sizes, custom solutions

academy

Knowledge transfer and partnership

Knowledge. Sharing. Partnerships.

- Seminars, white papers, CAD drawings, test reports, user reports
- Further information: www.varistar.co.uk

lifecycle

Flexible support throughout the product lifecycle

We are with you. For the entire product life.

- Delivery to point of use, set-up service, replacement service, spare parts

Cabinets – VARISTAR Seismic ServicePLUS

VARISTAR Seismic IP 20, IP 50, EMC ServicePLUS: Configuration

- Dimensions in catalogue:
  - Height: 29 ... 47 U (1400 ... 2200 mm)
  - Width: 600 and 800 mm
  - Depth: 600 and 800 mm
- Other dimensions and configurations, sorted by IP 20, IP 55 and EMC online at www.schroff.biz/conf
- 2 colour combinations:
  - Frame and covers in black grey (RAL 7021)
  - Frame, top cover and base in black grey (RAL 7021); Side panel, door and rear panel in light grey (RAL 7035)
- Build your cabinet out of individual components (please suffix each part number with /05)
- Once you have selected the desired cabinet dimensions, the row number (first column of the configuration tables) will guide you through all subsequent configuration pages that apply to these dimensions (see example below)
- The cabinet is assembled by us and ready for despatch within 10 working days

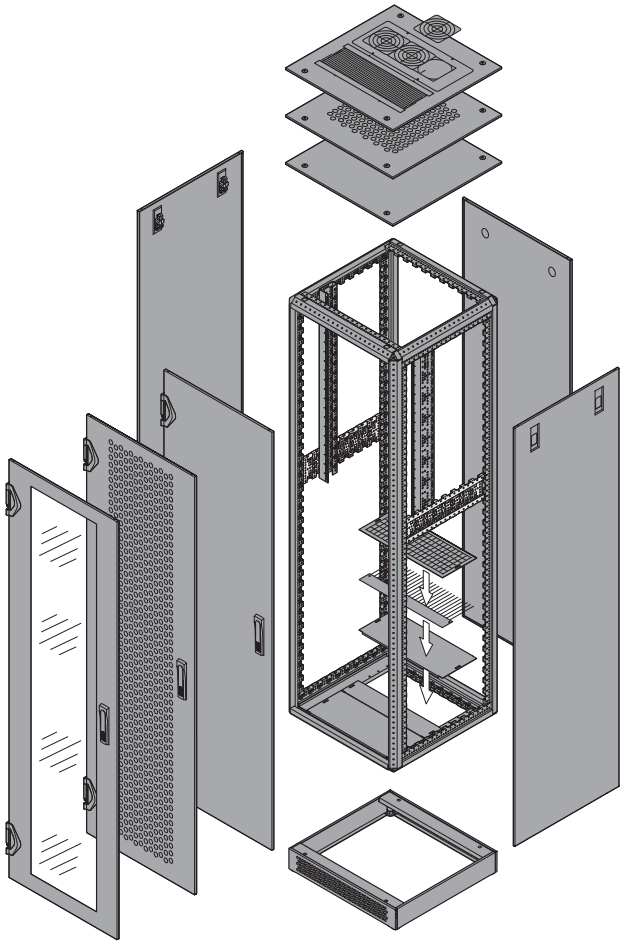

01004077

Example configuration (here: row 12)

Qty	Description	Order no.
1	Frame heavy duty, St profile, with strengthening brackets, height 2000 mm, width 600 mm, depth 800 mm, 1 piece	20130-630/05
1	Side panel, screw fixed, RAL 7021, PU 2 pieces	21130-011/05
1	Rear panel, screw-fixed, RAL 7021, 1 piece	21130-069/05
1	Steel door with 3-point locking, RAL 7021, IP 55, 1 piece	21130-159/05
1	Base/plinth, 1 piece	23130-455/05
..	.....	.....

	Page
Seismic IP 20	
Frames, side-by-side mounting kits, base/plinth	1.98
Side panels, rear panels, doors, top covers	1.99
Base plates, brush strips, filter inserts	1.100
Connecting plates for short doors/rear panels	1.101
Seismic IP 55	
Frames, gasketing kits, side-by-side mounting kits, base/plinth	1.102
Side panels, rear panels, doors, top covers	1.103
Base plates, gasketing	1.104
Connecting plates for short doors/rear panels	1.105
Seismic EMC	
Frames, gasketing kits, side-by-side mounting kits, base/plinth	1.106
Side panels, rear panels, doors, top covers	1.107
Base plates	1.108
Connecting plates for short doors/rear panels	1.109
Interior configuration	
Swing frames	1.110
19" panel/slide mounts	1.111
Mounting plates, stationary shelves, 75 kg	1.112
Telescopic shelves, 70 kg	1.113
19" shelves 1 U, stationary 75 kg, telescopic 30 kg	1.114
19" telescopic shelves, 2 U, 70 kg	1.115
Slide rails, depth members	1.116
Cable ductings	1.117
Cable ties, Velcro	1.118
ServicePLUS: solution - project examples	1.119

Cabinets – VARISTAR Seismic ServicePLUS

Seismic IP 20 Frames, side-by-side mounting kits, base/plinth

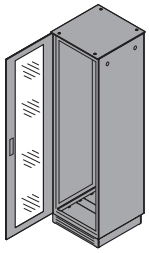

Completely in RAL 7021 (black grey)

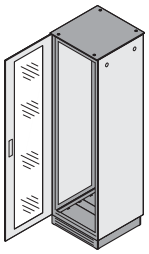

Colour combination RAL 7035 (light grey)/ RAL 7021 (black grey)

Seismic frame Heavy-Duty 800 kg

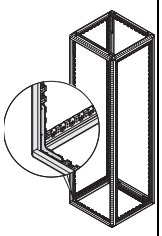

01009060

St, 1.5 mm, zinc-plated, with 8 reinforcing brackets, central GND/earthing point, static load-carrying capacity 800 kg

1 piece assembled

Side-by-side mounting kit IP 20

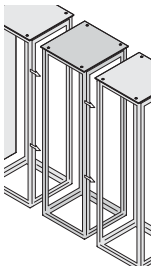

01004117

side-by-side mounting bracket (4 pieces), St; RAL 7021, not in combination with decorative frame

PU 1 kit supplied loose

Base/plinth

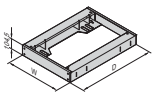

01009062

2 support profiles, St, 4 mm, lateral; 2 trims, St, 4 mm, front/ rear; height 104.5 mm; static load-carrying capacity 1000 kg

1 piece assembled

No.	Cabinet dimensions Height U	Height mm	Width mm	Depth mm	Seismic frame Heavy-Duty 800 kg	Side-by-side mounting kit IP 20	Base/plinth
	Completely in RAL 7021				RAL 7021		RAL 7021
1	29	1400	600	600	20130-617	23130-061	23130-454
2	29	1400	600	800	20130-618		23130-455
3	33	1600	600	600	20130-621	23130-061	23130-454
4	33	1600	600	800	20130-622		23130-455
5	33	1600	800	600	20130-623	23130-061	23130-456
6	33	1600	800	800	20130-624		23130-457
7	38	1800	600	600	20130-625	23130-061	23130-454
8	38	1800	600	800	20130-626		23130-455
9	38	1800	800	600	20130-627	23130-061	23130-456
10	38	1800	800	800	20130-628		23130-457
11	42	2000	600	600	20130-629	23130-061	23130-454
12	42	2000	600	800	20130-630		23130-455
13	42	2000	800	600	20130-631	23130-061	23130-456
14	42	2000	800	800	20130-632		23130-457
15	47	2200	600	600	20130-633	23130-061	23130-454
16	47	2200	600	800	20130-634		23130-455
17	47	2200	800	800	20130-636	23130-061	23130-457
	Colour combinations				RAL 7021		RAL 7021
18	29	1400	600	600	20130-617	23130-061	23130-454
19	29	1400	600	800	20130-618		23130-455
20	33	1600	600	600	20130-621	23130-061	23130-454
21	33	1600	600	800	20130-622		23130-455
22	33	1600	800	600	20130-623	23130-061	23130-456
23	33	1600	800	800	20130-624		23130-457
24	38	1800	600	600	20130-625	23130-061	23130-454
25	38	1800	600	800	20130-626		23130-455
26	38	1800	800	600	20130-627	23130-061	23130-456
27	38	1800	800	800	20130-628		23130-457
28	42	2000	600	600	20130-629	23130-061	23130-454
29	42	2000	600	800	20130-630		23130-455
30	42	2000	800	600	20130-631	23130-061	23130-456
31	42	2000	800	800	20130-632		23130-457
32	47	2200	600	600	20130-633	23130-061	23130-454
33	47	2200	600	800	20130-634		23130-455
34	47	2200	800	800	20130-636	23130-061	23130-457

Further dimensions and configurations online at www.schroff.biz/conf

Cabinets – VARISTAR Seismic ServicePLUS

Seismic IP 20 Side panels, rear panels, doors, top covers

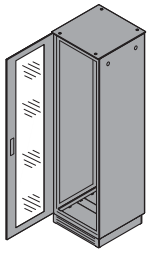

Completely in RAL 7021 (black grey)

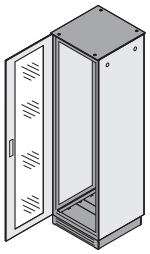

Colour combination RAL 7035 (light grey)/ RAL 7021 (black grey)

	Cabinet dimensions				Screw-fixed side panel	Screw-fixed rear panel	Steel door 3-point locking	DIN profile half cylinder	Plain flush top cover	
									Flat top cover	Lifting eye
					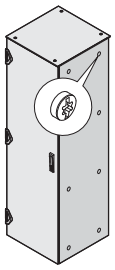 01004083	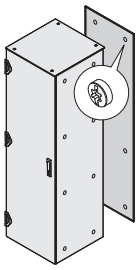 01004085	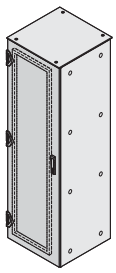 01008085	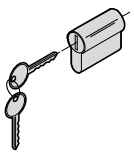 01004148	01004096	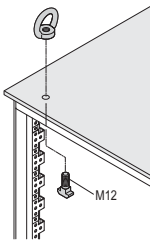 01004100
					St, 1 mm, incl. GND/earthing	St, 1 mm, incl. GND/earthing	St, 1.5 mm, opening angle 180°, inner side with mounting frame, lever handle with built-in push button, incl. GND/ earthing	for lever handle, common locking	St, 1.5 mm, incl. GND/earthing	for top cover, applications and load in accordance with DIN 582
No.	Height U	mm	Width mm	Depth mm	PU 2 pieces assembled	1 piece assembled	1 piece assembled	1 piece assembled	1 piece assembled	PU 4 pieces assembled
Completely in RAL 7021					RAL 7021		RAL 7021			RAL 7021
1	29	1400	600	600	21130-003	21130-063	21130-153	25127-995	21130-242	23130-072
2	29	1400	600	800	21130-004				21130-243	
3	33	1600	600	600	21130-005	21130-065	21130-155	25127-995	21130-242	23130-072
4	33	1600	600	800	21130-006				21130-243	
5	33	1600	800	600	21130-005	21130-066	21130-156	25127-995	21130-246	23130-072
6	33	1600	800	800	21130-006				21130-247	
7	38	1800	600	600	21130-007	21130-067	21130-157	25127-995	21130-242	23130-072
8	38	1800	600	800	21130-008				21130-243	
9	38	1800	800	600	21130-007	21130-068	21130-158	25127-995	21130-246	23130-072
10	38	1800	800	800	21130-008				21130-247	
11	42	2000	600	600	21130-010	21130-069	21130-159	25127-995	21130-242	23130-072
12	42	2000	600	800	21130-011				21130-243	
13	42	2000	800	600	21130-010	21130-070	21130-160	25127-995	21130-246	23130-072
14	42	2000	800	800	21130-011				21130-247	
15	47	2200	600	600	21130-015	21130-071	21130-161	25127-995	21130-242	23130-072
16	47	2200	600	800	21130-016				21130-243	
17	47	2200	800	800	21130-016	21130-072	21130-162	25127-995	21130-247	23130-072
Colour combinations					RAL 7035	RAL 7035	RAL 7035		RAL 7021	
18	29	1400	600	600	22130-003	22130-063	22130-153	25127-995	21130-242	23130-072
19	29	1400	600	800	22130-004				21130-243	
20	33	1600	600	600	22130-005	22130-065	22130-155	25127-995	21130-242	23130-072
21	33	1600	600	800	22130-006				21130-243	
22	33	1600	800	600	22130-005	22130-066	22130-156	25127-995	21130-246	23130-072
23	33	1600	800	800	22130-006				21130-247	
24	38	1800	600	600	22130-007	22130-067	22130-157	25127-995	21130-242	23130-072
25	38	1800	600	800	22130-008				21130-243	
26	38	1800	800	600	22130-007	22130-068	22130-158	25127-995	21130-246	23130-072
27	38	1800	800	800	22130-008				21130-247	
28	42	2000	600	600	22130-010	22130-069	22130-159	25127-995	21130-242	23130-072
29	42	2000	600	800	22130-011				21130-243	
30	42	2000	800	600	22130-010	22130-070	22130-160	25127-995	21130-246	23130-072
31	42	2000	800	800	22130-011				21130-247	
32	47	2200	600	600	22130-015	22130-071	22130-161	25127-995	21130-242	23130-072
33	47	2200	600	800	22130-016				21130-243	
34	47	2200	800	800	22130-016	22130-072	22130-162	25127-995	21130-247	23130-072

Seismic IP 20 Base plates, brush strips, filter inserts

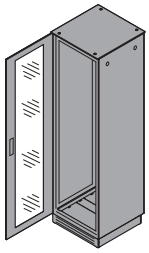

Completely in RAL 7021 (black grey)

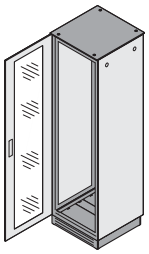

Colour combination RAL 7035 (light grey)/ RAL 7021 (black grey)

	Cabinet dimensions				Base plate			
					Base plate, multi-piece	Brush strip	Dust filter set	Cover plate
					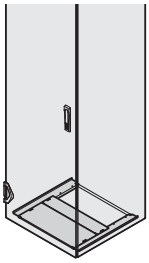 01004104	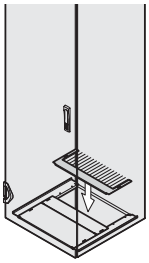 01004105	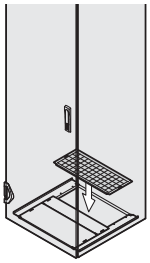 01004059	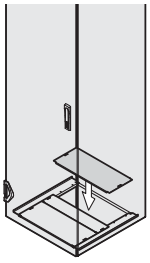 01004106
					St, 1.5 mm, multi-piece, opening to rear 200 mm deep (no rear opening with 300 mm cabinet depth), incl. GND/ earthing ; Dimension drawings see page 1.9	nylon, black	filter mat, white, class M1, in accordance with EN 799-G3	St, 1.5 mm, please order gasket IP55 separately
No.	Height U	mm	Width mm	Depth mm	1 piece assembled	1 piece assembled	1 piece assembled	1 piece assembled
Completely in RAL 7021					RAL 7021	RAL 7021		RAL 7021
1	29	1400	600	600	23130-001	23130-074	23130-075	23130-076
2	29	1400	600	800	23130-002			
3	33	1600	600	600	23130-001	23130-074	23130-075	23130-076
4	33	1600	600	800	23130-002			
5	33	1600	800	600	23130-005	23130-034	23130-035	23130-036
6	33	1600	800	800	23130-006			
7	38	1800	600	600	23130-001	23130-074	23130-075	23130-076
8	38	1800	600	800	23130-002			
9	38	1800	800	600	23130-005	23130-034	23130-035	23130-036
10	38	1800	800	800	23130-006			
11	42	2000	600	600	23130-001	23130-074	23130-075	23130-076
12	42	2000	600	800	23130-002			
13	42	2000	800	600	23130-005	23130-034	23130-035	23130-036
14	42	2000	800	800	23130-006			
15	47	2200	600	600	23130-001	23130-074	23130-075	23130-076
16	47	2200	600	800	23130-002			
17	47	2200	800	800	23130-006	23130-034	23130-035	23130-036
Colour combinations					RAL 7021	RAL 7021		RAL 7021
18	29	1400	600	600	23130-001	23130-074	23130-075	23130-076
19	29	1400	600	800	23130-002			
20	33	1600	600	600	23130-001	23130-074	23130-075	23130-076
21	33	1600	600	800	23130-002			
22	33	1600	800	600	23130-005	23130-034	23130-035	23130-036
23	33	1600	800	800	23130-006			
24	38	1800	600	600	23130-001	23130-074	23130-075	23130-076
25	38	1800	600	800	23130-002			
26	38	1800	800	600	23130-005	23130-034	23130-035	23130-036
27	38	1800	800	800	23130-006			
28	42	2000	600	600	23130-001	23130-074	23130-075	23130-076
29	42	2000	600	800	23130-002			
30	42	2000	800	600	23130-005	23130-034	23130-035	23130-036
31	42	2000	800	800	23130-006			
32	47	2200	600	600	23130-001	23130-074	23130-075	23130-076
33	47	2200	600	800	23130-002			
34	47	2200	800	800	23130-006	23130-034	23130-035	23130-036

Cabinets – VARISTAR Seismic ServicePLUS

Seismic IP 20 Connecting plates for short doors/rear panels

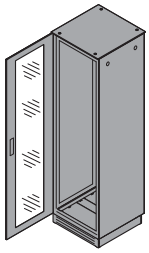 Completely in RAL 7021 (black grey) 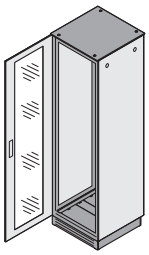 Colour combination RAL 7035 (light grey)/ RAL 7021 (black grey) Height mm	Width mm	Dimensioning connecting plate door/rear panel	Connecting plate for door and rear panel Plain	With brush strip	Assembly kit	Other VARISTAR interior mounting parts
		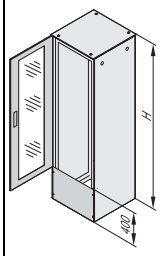 01005071 door and rear panel must be selected 400 mm shorter than the cabinet height; cannot be used with double door	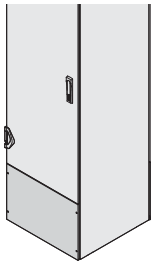 01005063 St, 1 mm, assembly also possible at top, height 400 mm, please order assembly kit separately in conjunction with rear panel	 01005069 St, 1 mm, assembly also possible at top, height 400 mm, please order assembly kit separately in conjunction with rear panel	only required if rear panel is assembled above the connecting plate	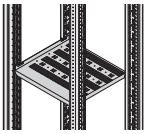 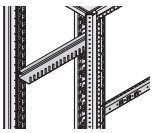 e.g. stationary shelves, 19" shelves, slide rails, cable ducting
			1 piece assembled	1 piece assembled	PU 1 kit assembled	
Completely in RAL 7021			RAL 7021	RAL 7021		
400	600		21130-472	21130-478	23130-164	from page 1.110
400	800		21130-473	21130-479	23130-164	
Colour combinations			RAL 7035	RAL 7035		
400	600		22130-472	22130-478	23130-164	from page 1.110
400	800		22130-473	22130-479	23130-164	

Cabinets – VARISTAR Seismic ServicePLUS

Seismic IP 55 Frames, gasketing kits, side-by-side mounting kits, base/plinth

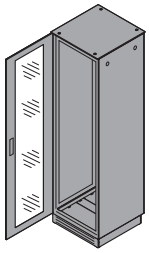

Completely in RAL 7021 (black grey)

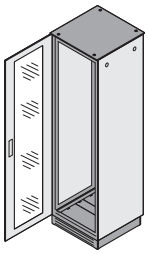

Colour combination RAL 7035 (light grey)/ RAL 7021 (black grey)

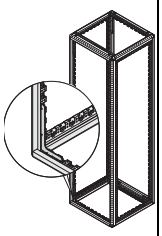

01009060

Seismic frame Heavy-Duty 800 kg

St, 1.5 mm, zinc-plated, with 8 strengthening brackets, central GND/earthing point, static load-carrying capacity 800 kg

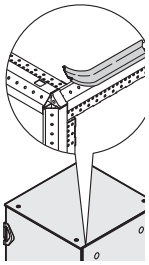

01004157

Gasketing kit IP 55

seals are glued to the frame, so that all cladding parts conform to protection type IP 55

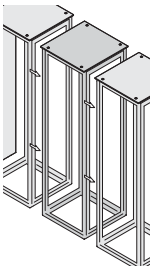

01004117

Side-by-side mounting kit IP 55 (with gasket)

side-by-side mounting bracket (4 pieces), St, RAL 7021, incl. gasket to cover the gap between two racks; not in combination with decorative frame

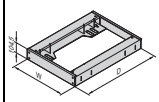

01009062

Base/plinth

2 support profiles, St, 4 mm, lateral; 2 trims, St, 4 mm, front/ rear; height 104.5 mm; static load-carrying capacity 1000 kg

No.	Cabinet dimensions Height U	Height mm	Width mm	Depth mm	Seismic frame Heavy-Duty 800 kg 1 piece assembled	Gasketing kit IP 55 PU 1 kit assembled	Side-by-side mounting kit IP 55 (with gasket) PU 1 kit supplied loose	Base/plinth 1 piece assembled
Completely in RAL 7021					RAL 7021			RAL 7021
1	29	1400	600	600	20130-617	23130-064	23130-062	23130-454
2	29	1400	600	800	20130-618			23130-455
3	33	1600	600	600	20130-621	23130-064	23130-062	23130-454
4	33	1600	600	800	20130-622			23130-455
5	33	1600	800	600	20130-623	23130-064	23130-062	23130-456
6	33	1600	800	800	20130-624			23130-457
7	38	1800	600	600	20130-625	23130-064	23130-062	23130-454
8	38	1800	600	800	20130-626			23130-455
9	38	1800	800	600	20130-627	23130-064	23130-062	23130-456
10	38	1800	800	800	20130-628			23130-457
11	42	2000	600	600	20130-629	23130-064	23130-062	23130-454
12	42	2000	600	800	20130-630			23130-455
13	42	2000	800	600	20130-631	23130-064	23130-062	23130-456
14	42	2000	800	800	20130-632			23130-457
15	47	2200	600	600	20130-633	23130-064	23130-062	23130-454
16	47	2200	600	800	20130-634			23130-455
17	47	2200	800	800	20130-636	23130-064	23130-062	23130-457
Colour combinations					RAL 7021			RAL 7021
18	29	1400	600	600	20130-617	23130-064	23130-062	23130-454
19	29	1400	600	800	20130-618			23130-455
20	33	1600	600	600	20130-621	23130-064	23130-062	23130-454
21	33	1600	600	800	20130-622			23130-455
22	33	1600	800	600	20130-623	23130-064	23130-062	23130-456
23	33	1600	800	800	20130-624			23130-457
24	38	1800	600	600	20130-625	23130-064	23130-062	23130-454
25	38	1800	600	800	20130-626			23130-455
26	38	1800	800	600	20130-627	23130-064	23130-062	23130-456
27	38	1800	800	800	20130-628			23130-457
28	42	2000	600	600	20130-629	23130-064	23130-062	23130-454
29	42	2000	600	800	20130-630			23130-455
30	42	2000	800	600	20130-631	23130-064	23130-062	23130-456
31	42	2000	800	800	20130-632			23130-457
32	47	2200	600	600	20130-633	23130-064	23130-062	23130-454
33	47	2200	600	800	20130-634			23130-455
34	47	2200	800	800	20130-636	23130-064	23130-062	23130-457

Further dimensions and configurations online at www.schroff.biz/conf

Cabinets – VARISTAR Seismic ServicePLUS

Seismic IP 55 Side panels, rear panels, doors, top covers

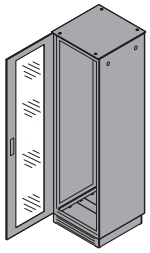

Completely in RAL 7021 (black grey)

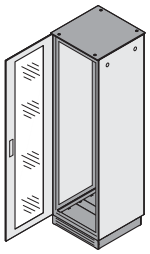

Colour combination RAL 7035 (light grey)/ RAL 7021 (black grey)

No.	Cabinet dimensions Height U	Height mm	Width mm	Depth mm	Screw-fixed side panel	Screw-fixed rear panel	Steel door 3-point locking	DIN profile half cylinder	Plain flush top cover: Flat top cover	Plain flush top cover: Lifting eye
					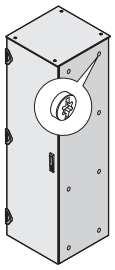 01004083 St, 1 mm, incl. GND/earthing	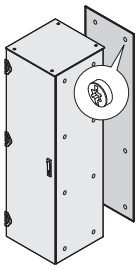 01004085 St, 1 mm, incl. GND/earthing	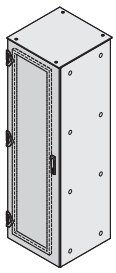 01008085 St, 1.5 mm, opening angle 180°, inner side with mounting frame, lever handle with built-in push button, incl. GND/ earthing	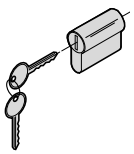 01004148 for lever handle, common locking	01004096 St, 1.5 mm, incl. GND/earthing	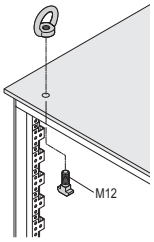 01004100 for top cover, applications and load in accordance with DIN 582
					PU 2 pieces assembled	1 piece assembled	1 piece assembled	1 piece assembled	1 piece assembled	PU 4 pieces assembled
Completely in RAL 7021					RAL 7021		RAL 7021			RAL 7021
1	29	1400	600	600	21130-003	21130-063	21130-153	25127-995	21130-242	23130-072
2	29	1400	600	800	21130-004				21130-243	
3	33	1600	600	600	21130-005	21130-065	21130-155	25127-995	21130-242	23130-072
4	33	1600	600	800	21130-006				21130-243	
5	33	1600	800	600	21130-005	21130-066	21130-156	25127-995	21130-246	23130-072
6	33	1600	800	800	21130-006				21130-247	
7	38	1800	600	600	21130-007	21130-067	21130-157	25127-995	21130-242	23130-072
8	38	1800	600	800	21130-008				21130-243	
9	38	1800	800	600	21130-007	21130-068	21130-158	25127-995	21130-246	23130-072
10	38	1800	800	800	21130-008				21130-247	
11	42	2000	600	600	21130-010	21130-069	21130-159	25127-995	21130-242	23130-072
12	42	2000	600	800	21130-011				21130-243	
13	42	2000	800	600	21130-010	21130-070	21130-160	25127-995	21130-246	23130-072
14	42	2000	800	800	21130-011				21130-247	
15	47	2200	600	600	21130-015	21130-071	21130-161	25127-995	21130-242	23130-072
16	47	2200	600	800	21130-016				21130-243	
17	47	2200	800	800	21130-016	21130-072	21130-162	25127-995	21130-247	23130-072
Colour combinations					RAL 7035	RAL 7035	RAL 7035		RAL 7021	
18	29	1400	600	600	22130-003	22130-063	22130-153	25127-995	21130-242	23130-072
19	29	1400	600	800	22130-004				21130-243	
20	33	1600	600	600	22130-005	22130-065	22130-155	25127-995	21130-242	23130-072
21	33	1600	600	800	22130-006				21130-243	
22	33	1600	800	600	22130-005	22130-066	22130-156	25127-995	21130-246	23130-072
23	33	1600	800	800	22130-006				21130-247	
24	38	1800	600	600	22130-007	22130-067	22130-157	25127-995	21130-242	23130-072
25	38	1800	600	800	22130-008				21130-243	
26	38	1800	800	600	22130-007	22130-068	22130-158	25127-995	21130-246	23130-072
27	38	1800	800	800	22130-008				21130-247	
28	42	2000	600	600	22130-010	22130-069	22130-159	25127-995	21130-242	23130-072
29	42	2000	600	800	22130-011				21130-243	
30	42	2000	800	600	22130-010	22130-070	22130-160	25127-995	21130-246	23130-072
31	42	2000	800	800	22130-011				21130-247	
32	47	2200	600	600	22130-015	22130-071	22130-161	25127-995	21130-242	23130-072
33	47	2200	600	800	22130-016				21130-243	
34	47	2200	800	800	22130-016	22130-072	22130-162	25127-995	21130-247	23130-072

Cabinets – VARISTAR Seismic ServicePLUS

Seismic IP 55 Base plates, gasketing

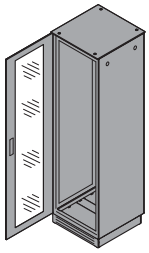

Completely in RAL 7021 (black grey)

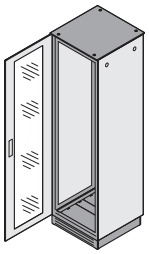

Colour combination RAL 7035 (light grey)/ RAL 7021 (black grey)

	Cabinet dimensions				Base plate			Base plate, one-piece, EMC, IP 55
					Base plate, multi-piece	Cover plate	IP 55 gasket	
					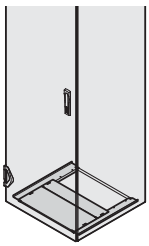	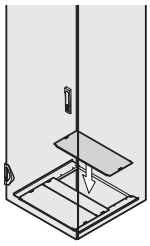	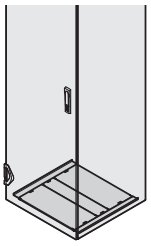	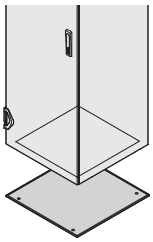
					01004104	01004106	01004073	01004051
					St, 1.5 mm, multi-piece, opening to rear 200 mm deep (no rear opening with 300 mm cabinet depth), incl. GND/ earthing ; Dimension drawings see page 1.9	St, 1.5 mm, please order IP55 gasket separately	for base plate with cover	AlZn, 1.5 mm, incl. GND/ earthing, assembly from outside
No.	Height U	Height mm	Width mm	Depth mm	1 piece assembled	1 piece assembled	1 piece assembled	1 piece assembled
Completely in RAL 7021					RAL 7021	RAL 7021		AlZn
1	29	1400	600	600	23130-001	23130-076	23130-073	21130-281
2	29	1400	600	800	23130-002			21130-282
3	33	1600	600	600	23130-001	23130-076	23130-073	21130-281
4	33	1600	600	800	23130-002			21130-282
5	33	1600	800	600	23130-005	23130-036	23130-073	21130-283
6	33	1600	800	800	23130-006			21130-284
7	38	1800	600	600	23130-001	23130-076	23130-073	21130-281
8	38	1800	600	800	23130-002			21130-282
9	38	1800	800	600	23130-005	23130-036	23130-073	21130-283
10	38	1800	800	800	23130-006			21130-284
11	42	2000	600	600	23130-001	23130-076	23130-073	21130-281
12	42	2000	600	800	23130-002			21130-282
13	42	2000	800	600	23130-005	23130-036	23130-073	21130-283
14	42	2000	800	800	23130-006			21130-284
15	47	2200	600	600	23130-001	23130-076	23130-073	21130-281
16	47	2200	600	800	23130-002			21130-282
17	47	2200	800	800	23130-006	23130-036	23130-073	21130-284
Colour combinations					RAL 7021	RAL 7021		AlZn
18	29	1400	600	600	23130-001	23130-076	23130-073	21130-281
19	29	1400	600	800	23130-002			21130-282
20	33	1600	600	600	23130-001	23130-076	23130-073	21130-281
21	33	1600	600	800	23130-002			21130-282
22	33	1600	800	600	23130-005	23130-036	23130-073	21130-283
23	33	1600	800	800	23130-006			21130-284
24	38	1800	600	600	23130-001	23130-076	23130-073	21130-281
25	38	1800	600	800	23130-002			21130-282
26	38	1800	800	600	23130-005	23130-036	23130-073	21130-283
27	38	1800	800	800	23130-006			21130-284
28	42	2000	600	600	23130-001	23130-076	23130-073	21130-281
29	42	2000	600	800	23130-002			21130-282
30	42	2000	800	600	23130-005	23130-036	23130-073	21130-283
31	42	2000	800	800	23130-006			21130-284
32	47	2200	600	600	23130-001	23130-076	23130-073	21130-281
33	47	2200	600	800	23130-002			21130-282
34	47	2200	800	800	23130-006	23130-036	23130-073	21130-284

Cabinets – VARISTAR Seismic ServicePLUS

Seismic IP 55 Connecting plates for short doors/rear panels

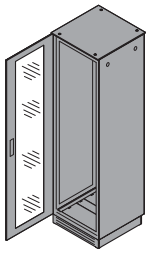 Completely in RAL 7021 (black grey) 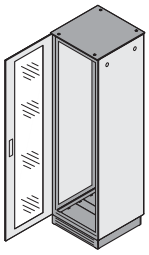 Colour combination RAL 7035 (light grey)/ RAL 7021 (black grey)	Dimensioning connecting plate door/rear panel	Connecting plate	Other VARISTAR interior mounting parts
	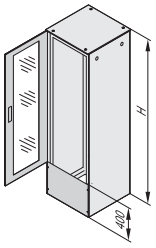 01005071 door and rear panel must be selected 400 mm shorter than the cabinet height; cannot be used with double door	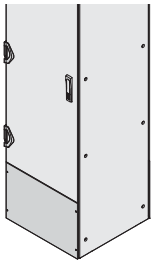 01005072 St, 1 mm, can also be fitted in upper part, height 400 mm, with assembly kit	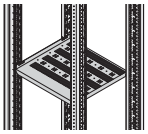 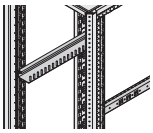 e.g. stationary shelves, 19" shelves, slide rails, cable ducting
Height mm / Width mm		1 piece assembled	
Completely in RAL 7021		RAL 7021	
400 600		21130-504	from page 1.110
400 800		21130-505	
Colour combinations		RAL 7035	
400 600		22130-504	from page 1.110
400 800		22130-505	

Cabinets – VARISTAR Seismic ServicePLUS

Seismic EMC Frames, gasketing kits, side-by-side mounting kits, base/plinth

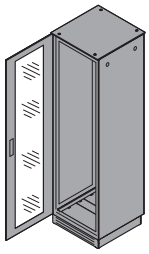

Completely in RAL 7021 (black grey)

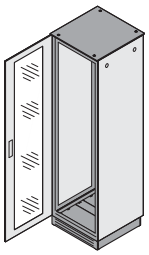

Colour combination RAL 7035 (light grey)/ RAL 7021 (black grey)

No.	Cabinet dimensions Height U	Height mm	Width mm	Depth mm	Seismic frame Heavy-Duty 800 kg 1 piece assembled	EMC gasketing kit PU 1 kit assembled	Side-by-side mounting kit EMC PU 1 kit supplied loose	Base/plinth 1 piece assembled
					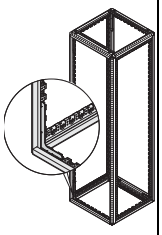 01009060 St, 1.5 mm, zinc-plated, with 8 strengthening brackets, central GND/earthing point, static load-carrying capacity 800 kg	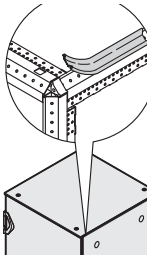 01004157 gaskets are glued to the frame, thus all the following cover parts are conductively linked	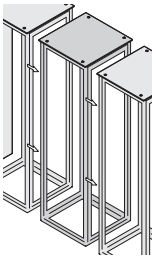 01004120 side-by-side mounting brackets (4 pieces), St	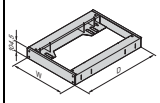 01009062 2 support profiles, St, 4 mm, lateral; 2 trims, St, 4 mm, front/ rear; height 104.5 mm; static load-carrying capacity 1000 kg
	Completely in RAL 7021				RAL 7021		RAL 7021	RAL 7021
1	29	1400	600	600	20130-617	23130-065	23130-063	23130-454
2	29	1400	600	800	20130-618			23130-455
3	33	1600	600	600	20130-621	23130-065	23130-063	23130-454
4	33	1600	600	800	20130-622			23130-455
5	33	1600	800	600	20130-623	23130-065	23130-063	23130-456
6	33	1600	800	800	20130-624			23130-457
7	38	1800	600	600	20130-625	23130-065	23130-063	23130-454
8	38	1800	600	800	20130-626			23130-455
9	38	1800	800	600	20130-627	23130-065	23130-063	23130-456
10	38	1800	800	800	20130-628			23130-457
11	42	2000	600	600	20130-629	23130-065	23130-063	23130-454
12	42	2000	600	800	20130-630			23130-455
13	42	2000	800	600	20130-631	23130-065	23130-063	23130-456
14	42	2000	800	800	20130-632			23130-457
15	47	2200	600	600	20130-633	23130-065	23130-063	23130-454
16	47	2200	600	800	20130-634			23130-455
17	47	2200	800	800	20130-636	23130-065	23130-063	23130-457
	Colour combinations				RAL 7021			RAL 7021
18	29	1400	600	600	20130-617	23130-065	23130-063	23130-454
19	29	1400	600	800	20130-618			23130-455
20	33	1600	600	600	20130-621	23130-065	23130-063	23130-454
21	33	1600	600	800	20130-622			23130-455
22	33	1600	800	600	20130-623	23130-065	23130-063	23130-456
23	33	1600	800	800	20130-624			23130-457
24	38	1800	600	600	20130-625	23130-065	23130-063	23130-454
25	38	1800	600	800	20130-626			23130-455
26	38	1800	800	600	20130-627	23130-065	23130-063	23130-456
27	38	1800	800	800	20130-628			23130-457
28	42	2000	600	600	20130-629	23130-065	23130-063	23130-454
29	42	2000	600	800	20130-630			23130-455
30	42	2000	800	600	20130-631	23130-065	23130-063	23130-456
31	42	2000	800	800	20130-632			23130-457
32	47	2200	600	600	20130-633	23130-065	23130-063	23130-454
33	47	2200	600	800	20130-634			23130-455
34	47	2200	800	800	20130-636	23130-065	23130-063	23130-457

Further dimensions and configurations online at www.schroff.biz/conf

Cabinets – VARISTAR Seismic ServicePLUS

Seismic EMC Side panels, rear panels, doors, top covers

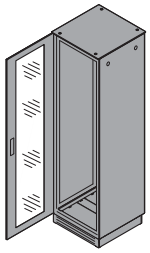

Completely in RAL 7021 (black grey)

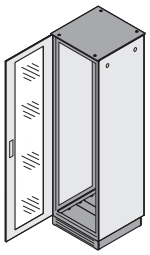

Colour combination RAL 7035 (light grey)/ RAL 7021 (black grey)

					Side panel, screw fixed, EMC, IP 55	Rear panel, screw fixed, EMC, IP 55	Steel door, 4-point locking			Flat top cover	
							Plain, EMC, IP 55	Perforated, EMC	DIN profile half cylinder	EMC, IP 55	Lifting eye
					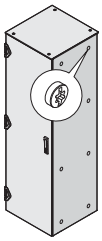	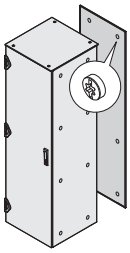		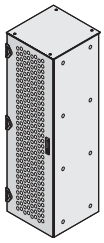	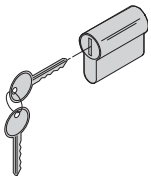	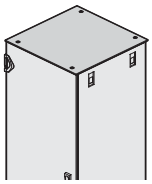	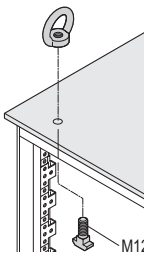
					01004083	01004085	01004092	01004093	01004148	01004096	01004090
					St, 1 mm, painted outside, AlZn inside, incl. GND/ earthing	St, 1 mm, painted outside, AlZn inside, incl. GND/ earthing	St, 1.5 mm, painted outside, interior AlZn, opening angle 180°, lever handle with push button, incl. GND/earthing	St, 1.5 mm, painted outside, interior AlZn, opening angle 180°, lever handle with push button, incl. GND/earthing	for lever handle, common locking	St, 1.5 mm, exterior painted, interior AlZn, incl. GND/ earthing	for top cover, applications and load in accordance with DIN 582
	Cabinet dimensions										
	Height		Width	Depth							
No.	U	mm	mm	mm	PU 2 pieces assembled	1 piece assembled	1 piece assembled	1 piece assembled	1 piece assembled	1 piece assembled	PU 4 pieces assembled
Completely in RAL 7021					RAL 7021	RAL 7021	RAL 7021	RAL 7021		RAL 7021	
1	29	1400	600	600	21130-023	21130-078	21130-168	21130-198	25127-995	21130-272	23130-072
2	29	1400	600	800	21130-024					21130-273	
3	33	1600	600	600	21130-025	21130-080	21130-170	21130-200	25127-995	21130-272	23130-072
4	33	1600	600	800	21130-026					21130-273	
5	33	1600	800	600	21130-025	21130-081	21130-171	21130-201	25127-995	21130-276	23130-072
6	33	1600	800	800	21130-026					21130-277	
7	38	1800	600	600	21130-027	21130-082	21130-172	21130-202	25127-995	21130-272	23130-072
8	38	1800	600	800	21130-028					21130-273	
9	38	1800	800	600	21130-027	21130-083	21130-173	21130-203	25127-995	21130-276	23130-072
10	38	1800	800	800	21130-028					21130-277	
11	42	2000	600	600	21130-030	21130-084	21130-174	21130-204	25127-995	21130-272	23130-072
12	42	2000	600	800	21130-031					21130-273	
13	42	2000	800	600	21130-030	21130-085	21130-175	21130-205	25127-995	21130-276	23130-072
14	42	2000	800	800	21130-031					21130-277	
15	47	2200	600	600	21130-035	21130-086	21130-176	21130-206	25127-995	21130-272	23130-072
16	47	2200	600	800	21130-036					21130-273	
17	47	2200	800	800	21130-036	21130-087	21130-177	21130-207	25127-995	21130-277	23130-072
Colour combinations					RAL 7035	RAL 7035		RAL 7035		RAL 7021	
18	29	1400	600	600	22130-023	22130-078	22130-168	21130-198	25127-995	21130-272	23130-072
19	29	1400	600	800	22130-024					21130-273	
20	33	1600	600	600	22130-025	22130-080	22130-170	21130-200	25127-995	21130-272	23130-072
21	33	1600	600	800	22130-026					21130-273	
22	33	1600	800	600	22130-025	22130-081	22130-171	21130-201	25127-995	21130-276	23130-072
23	33	1600	800	800	22130-026					21130-277	
24	38	1800	600	600	22130-027	22130-082	22130-172	21130-202	25127-995	21130-272	23130-072
25	38	1800	600	800	22130-028					21130-273	
26	38	1800	800	600	22130-027	22130-083	22130-173	21130-203	25127-995	21130-276	23130-072
27	38	1800	800	800	22130-028					21130-277	
28	42	2000	600	600	22130-030	22130-084	22130-174	21130-204	25127-995	21130-272	23130-072
29	42	2000	600	800	22130-031					21130-273	
30	42	2000	800	600	22130-030	22130-085	22130-175	21130-205	25127-995	21130-276	23130-072
31	42	2000	800	800	22130-031					21130-277	
32	47	2200	600	600	22130-035	22130-086	22130-176	21130-206	25127-995	21130-272	23130-072
33	47	2200	600	800	22130-036					21130-273	
34	47	2200	800	800	22130-036	22130-087	22130-177	21130-207	25127-995	21130-277	23130-072

Cabinets – VARISTAR Seismic ServicePLUS

Seismic EMC Base plates

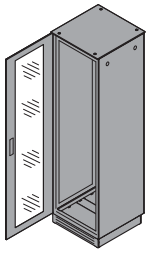

Completely in RAL 7021 (black grey)

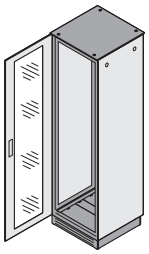

Colour combination RAL 7035 (light grey)/ RAL 7021 (black grey)

	Cabinet dimensions				Base plates		
					one-piece, EMC, IP 55	with cable ducting, EMC	perforated, with cable ducting, EMC
					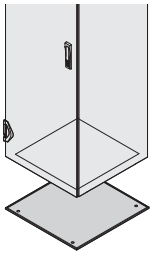	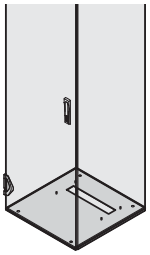	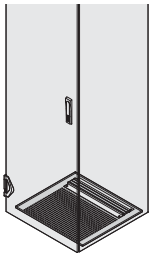
					01004051	01004108	01008051
					AlZn, 1.5 mm, incl. GND/ earthing, assembly from outside	AlZn, 1.5 mm, rear opening 60 mm deep, incl. GND/ earthing, assembly from outside	AlZn, 1.5 mm, incl. GND/ earthing; opening at rear for cabinet width of 600 mm: 359 x 60 mm, for cabinet width of 800 mm: 559 x 60 mm
					1 piece assembled	1 piece assembled	1 piece assembled
No.	Height U	Height mm	Width mm	Depth mm			
Completely in RAL 7021					AlZn	AlZn	AlZn
1	29	1400	600	600	21130-281	21130-291	23130-400
2	29	1400	600	800	21130-282	21130-292	23130-401
3	33	1600	600	600	21130-281	21130-291	23130-400
4	33	1600	600	800	21130-282	21130-292	23130-401
5	33	1600	800	600	21130-283	21130-293	23130-402
6	33	1600	800	800	21130-284	21130-294	23130-403
7	38	1800	600	600	21130-281	21130-291	23130-400
8	38	1800	600	800	21130-282	21130-292	23130-401
9	38	1800	800	600	21130-283	21130-293	23130-402
10	38	1800	800	800	21130-284	21130-294	23130-403
11	42	2000	600	600	21130-281	21130-291	23130-400
12	42	2000	600	800	21130-282	21130-292	23130-401
13	42	2000	800	600	21130-283	21130-293	23130-402
14	42	2000	800	800	21130-284	21130-294	23130-403
15	47	2200	600	600	21130-281	21130-291	23130-400
16	47	2200	600	800	21130-282	21130-292	23130-401
17	47	2200	800	800	21130-284	21130-294	23130-403
Colour combinations					AlZn	AlZn	AlZn
18	29	1400	600	600	21130-281	21130-291	23130-400
19	29	1400	600	800	21130-282	21130-292	23130-401
20	33	1600	600	600	21130-281	21130-291	23130-400
21	33	1600	600	800	21130-282	21130-292	23130-401
22	33	1600	800	600	21130-283	21130-293	23130-402
23	33	1600	800	800	21130-284	21130-294	23130-403
24	38	1800	600	600	21130-281	21130-291	23130-400
25	38	1800	600	800	21130-282	21130-292	23130-401
26	38	1800	800	600	21130-283	21130-293	23130-402
27	38	1800	800	800	21130-284	21130-294	23130-403
28	42	2000	600	600	21130-281	21130-291	23130-400
29	42	2000	600	800	21130-282	21130-292	23130-401
30	42	2000	800	600	21130-283	21130-293	23130-402
31	42	2000	800	800	21130-284	21130-294	23130-403
32	47	2200	600	600	21130-281	21130-291	23130-400
33	47	2200	600	800	21130-282	21130-292	23130-401
34	47	2200	800	800	21130-284	21130-294	23130-403

Cabinets – VARISTAR Seismic ServicePLUS

Seismic EMC Connecting plates for short doors/rear panels

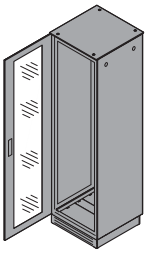

Completely in RAL 7021 (black grey)

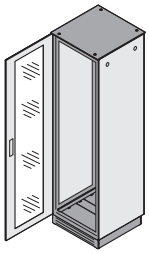

Colour combination RAL 7035 (light grey)/ RAL 7021 (black grey)

No.	Cabinet dimensions Height U	Height mm	Width mm	Depth mm	Dimensioning connecting plate door/rear panel	EMC connecting plate: Flat plate, EMC, IP 55	EMC connecting plate: Shortened plate, EMC, IP 55	Other VARISTAR interior mounting parts
					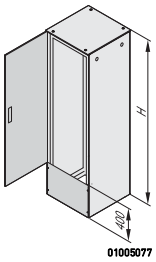 01005077 door and rear panel must be selected 400 mm shorter than cabinet height	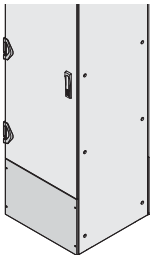 01005075 flat plate, stainless steel, 1 mm, height 400 mm, mounting can be at top or bottom	01005074 frame, stainless steel, 1 mm, mounting at top or bottom, height 400 mm, plate recessed by 40 mm, stainless steel, 1 mm	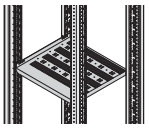 e.g. stationary shelves, 19" shelves, slide rails, cable ducting
						1 piece assembled	1 piece assembled	
	Completely in RAL 7021					RAL 7021	RAL 7021	
		400	600			21130-578	21130-580	from page 1.110
		400	800			21130-579	21130-581	
	Colour combinations					RAL 7035	RAL 7035	
		400	600			22130-578	22130-580	from page 1.110
		400	800			22130-579	22130-581	

Cabinets – VARISTAR Seismic ServicePLUS

Interior mounting Swing frames for cabinet width 600 mm

Order Information

			Swing frame	Stop 120°	Safety lock	Spare key
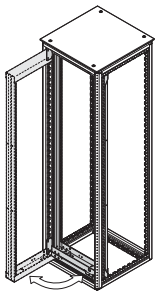			01005070	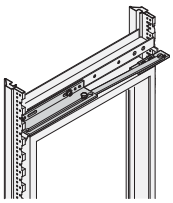 01005061	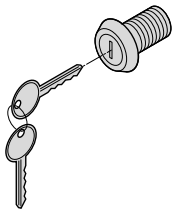 01015060	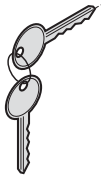 01015059
			St, 2 mm, RAL 7021, load-carrying capacity: 150 kg, 120° hinge, square locks incl. 2 keys (Dimension drawings link)	St; for safety reasons a swing frame stop is recommended	for swing frame, instead of square lock, incl. 2 keys	
Height U	Usable height U	Width mm	1 piece assembled	PU 1 kit assembled	1 piece assembled	PU 2 pieces supplied loose
partial height	12	600	21130-740	23130-158	**60113-267**	**60220-003**
partial height	21	600	21130-741	23130-158	**60113-267**	**60220-003**
29	25	600	21130-742	23130-158	**60113-267**	**60220-003**
33	30	600	21130-743	23130-158	**60113-267**	**60220-003**
38	34	600	21130-744	23130-158	**60113-267**	**60220-003**
42	39	600	21130-745	23130-158	**60113-267**	**60220-003**
47	43	600	21130-746	23130-158	**60113-267**	**60220-003**

Interior mounting Swing frames for cabinet width 800 mm

Order Information

			Swing frame 120°		Swing frame 160°		Swing frame trim		Safety lock
			Swing frame 120°	Stop 120°	Swing frame 160°	Stop 160°	Asymmetrical assembly	Symmetrical assembly	
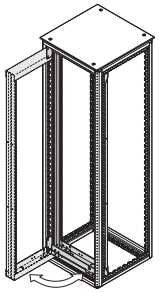			01005070	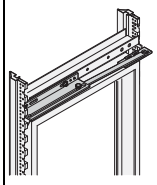 01005061	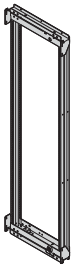 01005070	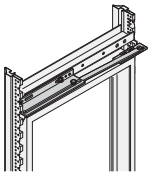 01005061	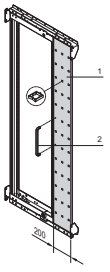 01005058	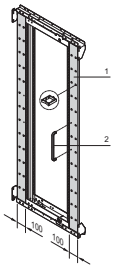 01005057	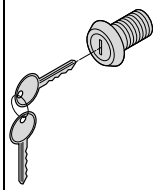 01015060
			St, 2 mm, RAL 7021, load-carrying capacity 150 kg, 120° hinge, square locks incl. 2 keys (Dimension drawings link)	St; for safety reasons a swing frame stop is recommended	St, 2 mm, RAL 7021, load-carrying capacity 150 kg, 160° hinge, square locks incl. 2 keys	St, swing frame stop is recommended for safety reasons	St, 1.5 mm, RAL 7021, trim (item 1, width 200 mm) incl. handle (item 2) and cut-out for cable eyes	St, 1.5 mm, RAL 7021, trim (item 1, 2 x width 100 mm) incl. handle (item 2) and cut-out for cable eyes	for swing frame, instead of square lock, incl. 2 keys
Height U	Usable height U	Width mm	assembled	PU 1 kit assembled	PU 2 pieces assembled	PU 1 kit assembled	1 piece assembled	PU 2 pieces assembled	1 piece assembled
partial height	12	800	21130-747	23130-158	21130-761	23130-159	–	–	**60113-267**
partial height	21	800	21130-748	23130-158	21130-762	23130-159	21130-432	21130-442	**60113-267**
29	25	800	21130-749	23130-158	21130-763	23130-159	21130-433	21130-443	**60113-267**
33	30	800	21130-750	23130-158	21130-764	23130-159	21130-434	21130-444	**60113-267**
38	34	800	21130-751	23130-158	21130-765	23130-159	21130-435	21130-445	**60113-267**
42	39	800	21130-752	23130-158	21130-766	23130-159	21130-436	21130-446	**60113-267**
47	43	800	21130-753	23130-158	21130-767	23130-159	21130-437	21130-447	**60113-267**

Cabinets – VARISTAR Seismic ServicePLUS

Interior mounting 19" panel/slide mounts

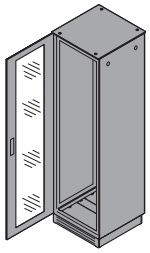

Completely in RAL 7021 (black grey)

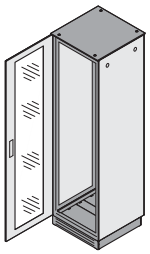

Colour combination RAL 7035 (light grey)/ RAL 7021 (black grey)

Dimension Standard fitting

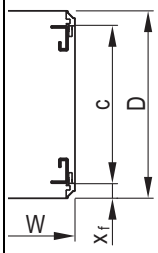

01004146

x_f = distance from front
c = pitch of 19" panel/slide mounts
D = cabinet depth
W = cabinet width

19" panel/slide mounts EIA

Painted RAL 7021 | AlZn

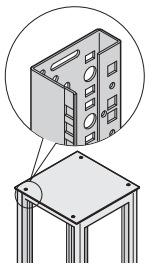

01004112

St, 1.75 mm; reduced-width adapter bracket required for 800 mm width; depth members are required for partial-height mounting

U height identification for 19" panel/ slide mount

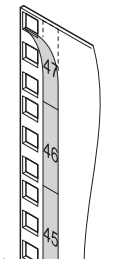

00505050

paper strip, white, serial numbered from 1 ... 47 U

19" assembly kit M6

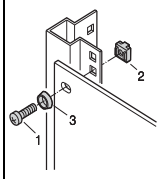

sc128

assembly kit: item 1: screws, item 2: cage nuts, item 3: washers

Adapter bracket for reduced width

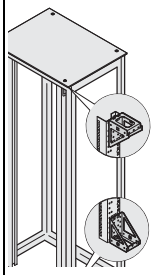

01004128

St, 2 mm, finish AlZn, for fixing the 19" panel/slide mounts in 800 mm wide cabinets

No.	Cabinet dimensions Height U	Height mm	Width mm	Depth mm	x_f mm	c mm	PU 1 pair assembled	PU 1 pair assembled	PU 4 pieces assembled	PU 50 pieces supplied loose	PU 4 pieces assembled
Completely in RAL 7021							RAL 7021	AlZn			AlZn
1	29	1400	600	600	50	500	23130-012	23130-032	25127-997	21101-809	–
2	29	1400	600	800	50	700					
3	33	1600	600	600	50	500	23130-013	23130-033	25127-997	21101-809	–
4	33	1600	600	800	50	700					
5	33	1600	800	600	50	500	23130-013	23130-033	25127-997	21101-809	23130-091
6	33	1600	800	800	150	500					
7	38	1800	600	600	50	500	23130-014	23130-034	25127-997	21101-809	–
8	38	1800	600	800	50	700					
9	38	1800	800	600	50	500	23130-014	23130-034	25127-997	21101-809	23130-091
10	38	1800	800	800	150	500					
11	42	2000	600	600	50	500	23130-015	23130-035	25127-997	21101-809	–
12	42	2000	600	800	50	700					
13	42	2000	800	600	50	500	23130-015	23130-035	25127-997	21101-809	23130-091
14	42	2000	800	800	150	500					
15	47	2200	600	600	50	500	23130-016	23130-036	25127-997	21101-809	–
16	47	2200	600	800	50	700					
17	47	2200	800	800	150	500	23130-016	23130-036	25127-997	21101-809	23130-091
Colour combinations							RAL 7035	AlZn			
18	29	1400	600	600	50	500	23130-022	23130-032	25127-997	21101-809	–
19	29	1400	600	800	50	700					
20	33	1600	600	600	50	500	23130-023	23130-033	25127-997	21101-809	–
21	33	1600	600	800	50	700					
22	33	1600	800	600	50	500	23130-023	23130-033	25127-997	21101-809	23130-091
23	33	1600	800	800	150	500					
24	38	1800	600	600	50	500	23130-024	23130-034	25127-997	21101-809	–
25	38	1800	600	800	50	700					
26	38	1800	800	600	50	500	23130-024	23130-034	25127-997	21101-809	23130-091
27	38	1800	800	800	150	500					
28	42	2000	600	600	50	500	23130-025	23130-035	25127-997	21101-809	–
29	42	2000	600	800	50	700					
30	42	2000	800	600	50	500	23130-025	23130-035	25127-997	21101-809	23130-091
31	42	2000	800	800	150	500					
32	47	2200	600	600	50	500	23130-026	23130-036	25127-997	21101-809	–
33	47	2200	600	800	50	700					
34	47	2200	800	800	150	500	23130-026	23130-036	25127-997	21101-809	23130-091

Cabinets – VARISTAR Seismic ServicePLUS

Interior mounting Mounting plates, stationary shelves, 75 kg

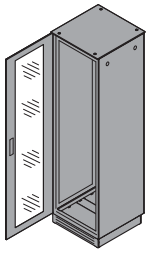

Completely in RAL 7021 (black grey)

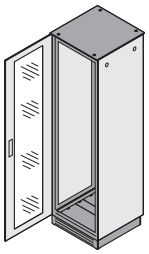

Colour combination RAL 7035 (light grey)/ RAL 7021 (black grey)

	Cabinet dimensions				Mounting plate			Stationary shelf	Stationary shelf	
					Full height	Height 1200 mm	Strengthening brackets	Full depth	Shortened by 100 mm	Depth member, 3 rows
					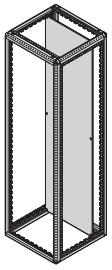 01008052	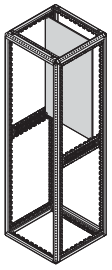 01008053	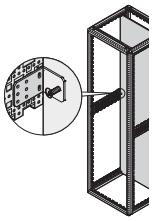 01008080	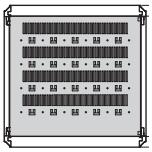 01004142	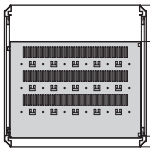 01004142	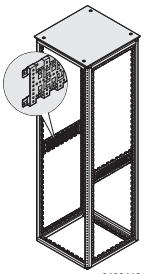 01004126
					St, zinc-plated, 3 mm, static load-carrying capacity up to 450 kg (rear mounted); strengthening bracket increases static load-carrying capacity; please order separately		St profile, increases static load-carrying capacity of mounting plate to 150 kg	St, 1.5 mm, static load-carrying capacity 75 kg, 1 U, incl. GND/ earthing	St, 1.5 mm, static load-carrying cap. 75 kg, 1 U, depth 479 mm, incl. GND/ earthing, for recessed installation order depth members	length 460 mm, St, 1.5 mm, finish AlZn; required for recessed shelf
No.	Height U	mm	Width mm	Depth mm	1 piece assembled	1 piece assembled	PU 2 pieces assembled	1 piece assembled	1 piece assembled	PU 1 pair assembled
Completely in RAL 7021					zinc-plated	zinc-plated	RAL 7021	RAL 7021	RAL 7021	AlZn
1	29	1400	600	600	–	23130-413	23130-418	21130-323	21130-322	23130-081
2	29	1400	600	800				21130-325	21130-324	23130-082
3	33	1600	600	600	–	23130-413	23130-418	21130-323	21130-322	23130-081
4	33	1600	600	800				21130-325	21130-324	23130-082
5	33	1600	800	600	–	23130-414	23130-418	21130-333	21130-332	23130-081
6	33	1600	800	800				21130-335	21130-334	23130-082
7	38	1800	600	600	23130-405	23130-413	23130-418	21130-323	21130-322	23130-081
8	38	1800	600	800				21130-325	21130-324	23130-082
9	38	1800	800	600	23130-406	23130-414	23130-418	21130-333	21130-332	23130-081
10	38	1800	800	800				21130-335	21130-334	23130-082
11	42	2000	600	600	23130-407	23130-413	23130-418	21130-323	21130-322	23130-081
12	42	2000	600	800				21130-325	21130-324	23130-082
13	42	2000	800	600	23130-408	23130-414	23130-418	21130-333	21130-332	23130-081
14	42	2000	800	800				21130-335	21130-334	23130-082
15	47	2200	600	600	–	23130-413	23130-418	21130-323	21130-322	23130-081
16	47	2200	600	800				21130-325	21130-324	23130-082
17	47	2200	800	800	–	23130-414	23130-418	21130-335	21130-334	23130-082
Colour combinations					zinc-plated	zinc-plated	RAL 7021	RAL 7035	RAL 7035	AlZn
18	29	1400	600	600	–	23130-413	23130-418	21130-323	21130-322	23130-081
19	29	1400	600	800				21130-325	21130-324	23130-082
20	33	1600	600	600	–	23130-413	23130-418	21130-323	21130-322	23130-081
21	33	1600	600	800				21130-325	21130-324	23130-082
22	33	1600	800	600	–	23130-414	23130-418	21130-333	21130-332	23130-081
23	33	1600	800	800				21130-335	21130-334	23130-082
24	38	1800	600	600	23130-405	23130-413	23130-418	21130-323	21130-322	23130-081
25	38	1800	600	800				21130-325	21130-324	23130-082
26	38	1800	800	600	23130-406	23130-414	23130-418	21130-333	21130-332	23130-081
27	38	1800	800	800				21130-335	21130-334	23130-082
28	42	2000	600	600	23130-407	23130-413	23130-418	21130-323	21130-322	23130-081
29	42	2000	600	800				21130-325	21130-324	23130-082
30	42	2000	800	600	23130-408	23130-414	23130-418	21130-333	21130-332	23130-081
31	42	2000	800	800				21130-335	21130-334	23130-082
32	47	2200	600	600	–	23130-413	23130-418	21130-323	21130-322	23130-081
33	47	2200	600	800				21130-325	21130-324	23130-082
34	47	2200	800	800	–	23130-414	23130-418	21130-335	21130-334	23130-082

Cabinets – VARISTAR Seismic ServicePLUS

Interior mounting Telescopic shelves, 70 kg

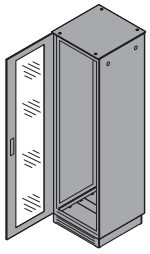

Completely in RAL 7021 (black grey)

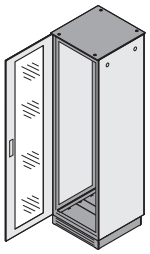

Colour combination RAL 7035 (light grey)/ RAL 7021 (black grey)

					Telescopic shelf, 2 U				
					Full depth	Shortened by 100 mm	Mounting bracket	T-bar lock	GND/earthing
					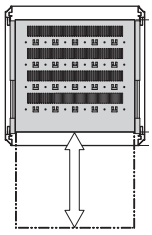 01004144 St, 1.5 mm, static load-carrying capacity 70/50 kg (width 600/ 800 mm), incl. telescopic slide, please order mounting bracket separately	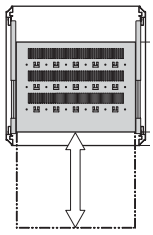 01004145 St, 1.5 mm, static load-carrying capacity 70/50 kg (width 600/ 800 mm), incl. telescopic slide, please order mounting bracket separately	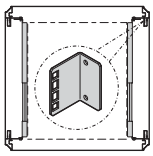 01005054 St, finish AlZn	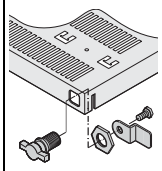 01004125 to lock the telescopic shelf	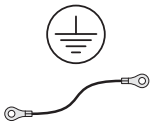 05904052 for telescopic shelf
	Cabinet dimensions								
No.	Height U	mm	Width mm	Depth mm	1 piece assembled	1 piece assembled	PU 4 pieces assembled	1 piece assembled	PU 1 kit assembled
Completely in RAL 7021					RAL 7021	RAL 7021	AlZn		
1	29	1400	600	600	21130-353	21130-352	23130-274	23130-092	23130-140
2	29	1400	600	800	21130-355	21130-354			
3	33	1600	600	600	21130-353	21130-352	23130-274	23130-092	23130-140
4	33	1600	600	800	21130-355	21130-354			
5	33	1600	800	600	21130-373	21130-372	23130-274	23130-092	23130-140
6	33	1600	800	800	21130-375	21130-374			
7	38	1800	600	600	21130-353	21130-352	23130-274	23130-092	23130-140
8	38	1800	600	800	21130-355	21130-354			
9	38	1800	800	600	21130-373	21130-372	23130-274	23130-092	23130-140
10	38	1800	800	800	21130-375	21130-374			
11	42	2000	600	600	21130-353	21130-352	23130-274	23130-092	23130-140
12	42	2000	600	800	21130-355	21130-354			
13	42	2000	800	600	21130-373	21130-372	23130-274	23130-092	23130-140
14	42	2000	800	800	21130-375	21130-374			
15	47	2200	600	600	21130-353	21130-352	23130-274	23130-092	23130-140
16	47	2200	600	800	21130-355	21130-354			
17	47	2200	800	800	21130-375	21130-374	23130-274	23130-092	23130-140
Colour combinations					RAL 7035	RAL 7035	AlZn		RAL 7021
18	29	1400	600	600	22130-353	22130-352	23130-274	23130-092	23130-140
19	29	1400	600	800	22130-355	22130-354			
20	33	1600	600	600	22130-353	22130-352	23130-274	23130-092	23130-140
21	33	1600	600	800	22130-355	22130-354			
22	33	1600	800	600	22130-373	22130-372	23130-274	23130-092	23130-140
23	33	1600	800	800	22130-375	22130-374			
24	38	1800	600	600	22130-353	22130-352	23130-274	23130-092	23130-140
25	38	1800	600	800	22130-355	22130-354			
26	38	1800	800	600	22130-373	22130-372	23130-274	23130-092	23130-140
27	38	1800	800	800	22130-375	22130-374			
28	42	2000	600	600	22130-353	22130-352	23130-274	23130-092	23130-140
29	42	2000	600	800	22130-355	22130-354			
30	42	2000	800	600	22130-373	22130-372	23130-274	23130-092	23130-140
31	42	2000	800	800	22130-375	22130-374			
32	47	2200	600	600	22130-353	22130-352	23130-274	23130-092	23130-140
33	47	2200	600	800	22130-355	22130-354			
34	47	2200	800	800	22130-375	22130-374	23130-274	23130-092	23130-140

Cabinets – VARISTAR Seismic ServicePLUS

Interior mounting 19" shelves 1 U, stationary 75 kg, telescopic 30 kg

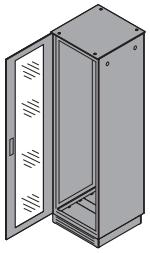

Completely in RAL 7021 (black grey)

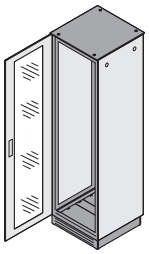

Colour combination RAL 7035 (light grey)/ RAL 7021 (black grey)

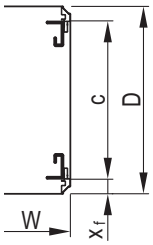

01004146

x_f = distance from front
c = pitch of 19" panel/slide mounts
D = cabinet depth
W = cabinet width

	Cabinet dimensions				Dimension Standard fitting		19" stationary shelf, 1 U, 75 kg		19" telescopic shelf, 1 U, 30 kg		
							Full depth	Shortened by 100 mm	Full depth	Shortened by 100 mm	GND/earthing
							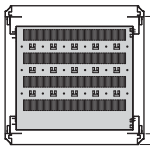	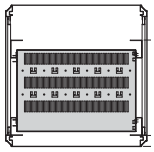	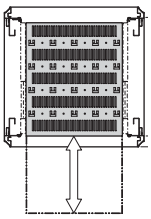	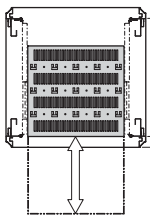	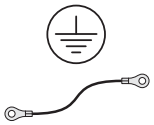
							01004118	01004119	01004123	01004122	05904052
							St, 1.5 mm, static load-carrying capacity 75 kg, depth 600 mm, incl. GND/ earthing	St, 1.5 mm, static load-carrying capacity 75 kg, depth 500 mm, incl. GND/ earthing	St, 1.5 mm, static load-carrying capacity 30 kg, incl. telescopic slide; please order GND/earthing kit separately	St, 1.5 mm, static load-carrying capacity 30 kg, incl. telescopic slide; please order GND/earthing kit separately	for telescopic shelf
No.	Height U	Height mm	Width mm	Depth mm	x_f mm	c mm	1 piece assembled	1 piece assembled	1 piece assembled	1 piece assembled	PU 1 kit assembled
Completely in RAL 7021							RAL 7021	RAL 7021	RAL 7021	RAL 7021	
1	29	1400	600	600	50	500	21130-303	21130-302	21130-343	21130-342	23130-140
2	29	1400	600	800	50	700	21130-305	21130-304	21130-345	21130-344	
3	33	1600	600	600	50	500	21130-303	21130-302	21130-343	21130-342	23130-140
4	33	1600	600	800	50	700	21130-305	21130-304	21130-345	21130-344	
5	33	1600	800	600	50	500	21130-303	21130-302	21130-343	21130-342	23130-140
6	33	1600	800	800	150	500	21130-303	21130-302	21130-343	21130-342	
7	38	1800	600	600	50	500	21130-303	21130-302	21130-343	21130-342	23130-140
8	38	1800	600	800	50	700	21130-305	21130-304	21130-345	21130-344	
9	38	1800	800	600	50	500	21130-303	21130-302	21130-343	21130-342	23130-140
10	38	1800	800	800	150	500	21130-303	21130-302	21130-343	21130-342	
11	42	2000	600	600	50	500	21130-303	21130-302	21130-343	21130-342	23130-140
12	42	2000	600	800	50	700	21130-305	21130-304	21130-345	21130-344	
13	42	2000	800	600	50	500	21130-303	21130-302	21130-343	21130-342	23130-140
14	42	2000	800	800	150	500	21130-303	21130-302	21130-343	21130-342	
15	47	2200	600	600	50	500	21130-303	21130-302	21130-343	21130-342	23130-140
16	47	2200	600	800	50	700	21130-305	21130-304	21130-345	21130-344	
17	47	2200	800	800	150	500	21130-303	21130-302	21130-343	21130-342	23130-140
Colour combinations							RAL 7035	RAL 7035	RAL 7035	RAL 7035	
18	29	1400	600	600	50	500	22130-303	22130-302	22130-343	22130-342	23130-140
19	29	1400	600	800	50	700	22130-305	22130-304	22130-345	22130-344	
20	33	1600	600	600	50	500	22130-303	22130-302	22130-343	22130-342	23130-140
21	33	1600	600	800	50	700	22130-305	22130-304	22130-345	22130-344	
22	33	1600	800	600	50	500	22130-303	22130-302	22130-343	22130-342	23130-140
23	33	1600	800	800	150	500	22130-303	22130-302	22130-343	22130-342	
24	38	1800	600	600	50	500	22130-303	22130-302	22130-343	22130-342	23130-140
25	38	1800	600	800	50	700	22130-305	22130-304	22130-345	22130-344	
26	38	1800	800	600	50	500	22130-303	22130-302	22130-343	22130-342	23130-140
27	38	1800	800	800	150	500	22130-303	22130-302	22130-343	22130-342	
28	42	2000	600	600	50	500	22130-303	22130-302	22130-343	22130-342	23130-140
29	42	2000	600	800	50	700	22130-305	22130-304	22130-345	22130-344	
30	42	2000	800	600	50	500	22130-303	22130-302	22130-343	22130-342	23130-140
31	42	2000	800	800	150	500	22130-303	22130-302	22130-343	22130-342	
32	47	2200	600	600	50	500	22130-303	22130-302	22130-343	22130-342	23130-140
33	47	2200	600	800	50	700	22130-305	22130-304	22130-345	22130-344	
34	47	2200	800	800	150	500	22130-303	22130-302	22130-343	22130-342	23130-140

Cabinets – VARISTAR Seismic ServicePLUS

Interior mounting 19" telescopic shelves, 2 U, 70 kg

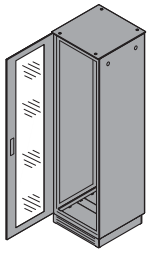

Completely in RAL 7021 (black grey)

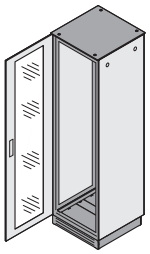

Colour combination RAL 7035 (light grey)/ RAL 7021 (black grey)

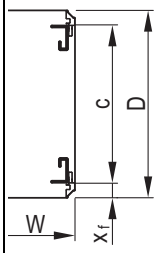

01004146

x_f = distance from front
c = pitch of 19" panel/slide mounts
D = cabinet depth
W = cabinet width

	Cabinet dimensions				Dimension Standard fitting		Telescopic shelf, 2 U, 70 kg			
							Full depth	Shortened by 100 mm	T-bar lock	GND/earthing
							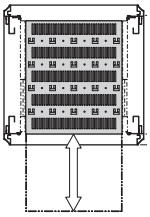	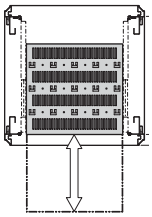	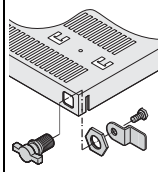	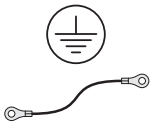
							01004123	01004122	01004125	05904052
							St, 1.5 mm, RAL 7021, static load-carrying capacity 70 kg, width 417 mm, depth 482 mm, incl. telescopic slide, please order T-bar lock and earthing kit separately	St, 1.5 mm, RAL 7021, static load-carrying capacity 70 kg, width 400 mm, depth 682 mm, incl. telescopic slide, please order T-bar lock and earthing kit separately	to lock the telescopic shelf	for telescopic shelf
	Height		Width	Depth	x_f	c	1 piece	1 piece	1 piece	PU 1 kit
No.	U	mm	mm	mm	mm	mm	assembled	assembled	assembled	assembled
Completely in RAL 7021							RAL 7021	RAL 7021		
1	29	1400	600	600	50	500	21130-353	21130-352	23130-092	23130-140
2	29	1400	600	800	50	700	21130-355	21130-354		
3	33	1600	600	600	50	500	21130-353	21130-352	23130-092	23130-140
4	33	1600	600	800	50	700	21130-355	21130-354		
5	33	1600	800	600	50	500	21130-353	21130-352	23130-092	23130-140
6	33	1600	800	800	150	500	21130-355	21130-354		
7	38	1800	600	600	50	500	21130-353	21130-352	23130-092	23130-140
8	38	1800	600	800	50	700	21130-355	21130-354		
9	38	1800	800	600	50	500	21130-353	21130-352	23130-092	23130-140
10	38	1800	800	800	150	500	21130-355	21130-354		
11	42	2000	600	600	50	500	21130-353	21130-352	23130-092	23130-140
12	42	2000	600	800	50	700	21130-355	21130-354		
13	42	2000	800	600	50	500	21130-353	21130-352	23130-092	23130-140
14	42	2000	800	800	150	500	21130-355	21130-354		
15	47	2200	600	600	50	500	21130-353	21130-352	23130-092	23130-140
16	47	2200	600	800	50	700	21130-355	21130-354		
17	47	2200	800	800	150	500	21130-353	21130-352	23130-092	23130-140
Colour combinations							RAL 7035	RAL 7035		
18	29	1400	600	600	50	500	22130-353	22130-352	23130-092	23130-140
19	29	1400	600	800	50	700	22130-355	22130-354		
20	33	1600	600	600	50	500	22130-353	22130-352	23130-092	23130-140
21	33	1600	600	800	50	700	22130-355	22130-354		
22	33	1600	800	600	50	500	22130-353	22130-352	23130-092	23130-140
23	33	1600	800	800	150	500	22130-355	22130-354		
24	38	1800	600	600	50	500	22130-353	22130-352	23130-092	23130-140
25	38	1800	600	800	50	700	22130-355	22130-354		
26	38	1800	800	600	50	500	22130-353	22130-352	23130-092	23130-140
27	38	1800	800	800	150	500	22130-355	22130-354		
28	42	2000	600	600	50	500	22130-353	22130-352	23130-092	23130-140
29	42	2000	600	800	50	700	22130-355	22130-354		
30	42	2000	800	600	50	500	22130-353	22130-352	23130-092	23130-140
31	42	2000	800	800	150	500	22130-353	22130-352		
32	47	2200	600	600	50	500	22130-353	22130-352	23130-092	23130-140
33	47	2200	600	800	50	700	22130-355	22130-354		
34	47	2200	800	800	150	500	22130-353	22130-352	23130-092	23130-140

Cabinets – VARISTAR Seismic ServicePLUS

Interior mounting Slide rails, depth members

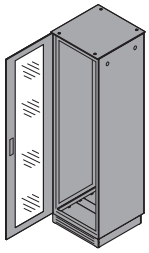

Completely in RAL 7021 (black grey)

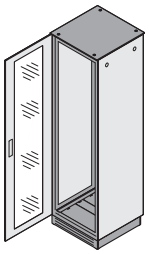

Colour combination RAL 7035 (light grey)/ RAL 7021 (black grey)

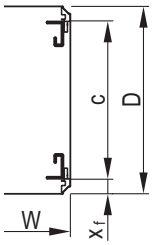

01004146

x_f = distance from front
c = pitch of 19" panel/slide mounts
D = cabinet depth
W = cabinet width

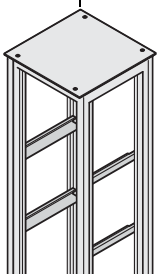

01004115

St, 1.5 mm, finish AlZn, static load-carrying capacity 25 kg/ pair

St, 2.5 mm, zinc-plated, static load-carrying capacity 100 kg/ pair

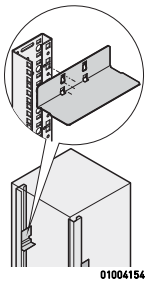

01004154

St, 1.5 mm, finish AlZn, static load-carrying capacity 15 kg/ pair

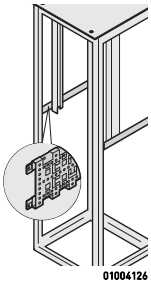

01004126

length 460 mm, St, 1.5 mm, finish AlZn; required for recessed shelf

No.	Cabinet dimensions Height U	Height mm	Width mm	Depth mm	Dimension Standard fitting x_f mm	Dimension Standard fitting c mm	Slide rail 25 kg PU 2 pieces supplied loose	Slide rail 100 kg PU 2 pieces supplied loose	Short slide rail PU 1 kit supplied loose	Depth member, 3 rows PU 1 pair assembled
Completely in RAL 7021							AlZn	zinc-plated	AlZn	AlZn
1	29	1400	600	600	50	500	23130-096	23130-118	23130-094	23130-081
2	29	1400	600	800	50	700	23130-097	23130-119		23130-082
3	33	1600	600	600	50	500	23130-096	23130-118	23130-094	23130-081
4	33	1600	600	800	50	700	23130-097	23130-119		23130-082
5	33	1600	800	600	50	500	23130-096	23130-118	23130-094	23130-081
6	33	1600	800	800	150	500	23130-096	23130-118		23130-082
7	38	1800	600	600	50	500	23130-096	23130-118	23130-094	23130-081
8	38	1800	600	800	50	700	23130-097	23130-119		23130-082
9	38	1800	800	600	50	500	23130-096	23130-118	23130-094	23130-081
10	38	1800	800	800	150	500	23130-096	23130-118		23130-082
11	42	2000	600	600	50	500	23130-096	23130-118	23130-094	23130-081
12	42	2000	600	800	50	700	23130-097	23130-119		23130-082
13	42	2000	800	600	50	500	23130-096	23130-118	23130-094	23130-081
14	42	2000	800	800	150	500	23130-096	23130-118		23130-082
15	47	2200	600	600	50	500	23130-096	23130-118	23130-094	23130-081
16	47	2200	600	800	50	700	23130-097	23130-119		23130-082
17	47	2200	800	800	150	500	23130-096	23130-118	23130-094	23130-082
Colour combinations							AlZn	zinc-plated	AlZn	AlZn
18	29	1400	600	600	50	500	23130-096	23130-118	23130-094	23130-081
19	29	1400	600	800	50	700	23130-097	23130-119		23130-082
20	33	1600	600	600	50	500	23130-096	23130-118	23130-094	23130-081
21	33	1600	600	800	50	700	23130-097	23130-119		23130-082
22	33	1600	800	600	50	500	23130-096	23130-118	23130-094	23130-081
23	33	1600	800	800	150	500	23130-096	23130-118		23130-082
24	38	1800	600	600	50	500	23130-096	23130-118	23130-094	23130-081
25	38	1800	600	800	50	700	23130-097	23130-119		23130-082
26	38	1800	800	600	50	500	23130-096	23130-118	23130-094	23130-081
27	38	1800	800	800	150	500	23130-096	23130-118		23130-082
28	42	2000	600	600	50	500	23130-096	23130-118	23130-094	23130-081
29	42	2000	600	800	50	700	23130-097	23130-119		23130-082
30	42	2000	800	600	50	500	23130-096	23130-118	23130-094	23130-081
31	42	2000	800	800	150	500	23130-096	23130-118		23130-082
32	47	2200	600	600	50	500	23130-096	23130-118	23130-094	23130-081
33	47	2200	600	800	50	700	23130-097	23130-119		23130-082
34	47	2200	800	800	150	500	23130-096	23130-118	23130-094	23130-082

Cabinets – VARISTAR Seismic ServicePLUS

Interior mounting Cable ductings

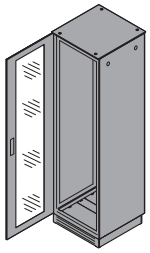

Completely in RAL 7021 (black grey)

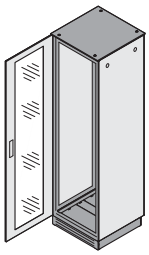

Colour combination RAL 7035 (light grey)/ RAL 7021 (black grey)

					Cable ducting with C-profile				
					C-rail for cabinet depth	C-rail for cabinet width	Slide nut	Cable shell	Cable support for C-rail
					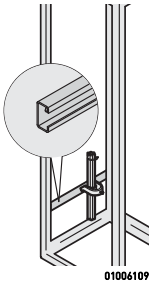 01006109	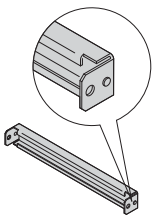 01006107	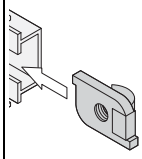 01504054	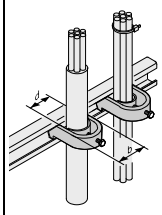 vnt009	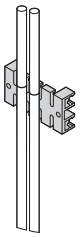 01006110
					St, 1.5 mm, finish AlZn	St, 1.5 mm, finish AlZn	for C-rail	for C-rail or for cable support rail, for cable bundles of 42 ... 46 mm, further dimensions see page 1.93	PA, UL 94 V-0, black, assembly by clipping onto the C-rail
	Cabinet dimensions								
	Height		Width	Depth	PU 2 pieces	PU 2 pieces	PU 10 pieces	PU 10 pieces	PU 5 pieces
No.	U	mm	mm	mm	supplied loose	supplied loose	supplied loose	supplied loose	supplied loose
Completely in RAL 7021					AlZn	AlZn			
1	29	1400	600	600	23130-086	23130-333	21120-140	20114-731	60118-472
2	29	1400	600	800	23130-087				
3	33	1600	600	600	23130-086	23130-333	21120-140	20114-731	60118-472
4	33	1600	600	800	23130-087				
5	33	1600	800	600	23130-086	23130-334	21120-140	20114-731	60118-472
6	33	1600	800	800	23130-087				
7	38	1800	600	600	23130-086	23130-333	21120-140	20114-731	60118-472
8	38	1800	600	800	23130-087				
9	38	1800	800	600	23130-086	23130-334	21120-140	20114-731	60118-472
10	38	1800	800	800	23130-087				
11	42	2000	600	600	23130-086	23130-333	21120-140	20114-731	60118-472
12	42	2000	600	800	23130-087				
13	42	2000	800	600	23130-086	23130-334	21120-140	20114-731	60118-472
14	42	2000	800	800	23130-087				
15	47	2200	600	600	23130-086	23130-333	21120-140	20114-731	60118-472
16	47	2200	600	800	23130-087				
17	47	2200	800	800	23130-087	23130-334	21120-140	20114-731	60118-472
Colour combinations					AlZn	AlZn			
18	29	1400	600	600	23130-086	23130-333	21120-140	20114-731	60118-472
19	29	1400	600	800	23130-087				
20	33	1600	600	600	23130-086	23130-333	21120-140	20114-731	60118-472
21	33	1600	600	800	23130-087				
22	33	1600	800	600	23130-086	23130-334	21120-140	20114-731	60118-472
23	33	1600	800	800	23130-087				
24	38	1800	600	600	23130-086	23130-333	21120-140	20114-731	60118-472
25	38	1800	600	800	23130-087				
26	38	1800	800	600	23130-086	23130-334	21120-140	20114-731	60118-472
27	38	1800	800	800	23130-087				
28	42	2000	600	600	23130-086	23130-333	21120-140	20114-731	60118-472
29	42	2000	600	800	23130-087				
30	42	2000	800	600	23130-086	23130-334	21120-140	20114-731	60118-472
31	42	2000	800	800	23130-087				
32	47	2200	600	600	23130-086	23130-333	21120-140	20114-731	60118-472
33	47	2200	600	800	23130-087				
34	47	2200	800	800	23130-087	23130-334	21120-140	20114-731	60118-472

Cabinets – VARISTAR Seismic ServicePLUS

Interior mounting Cable ties, Velcro

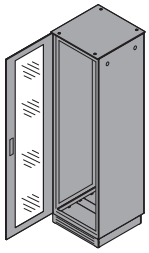

Completely in RAL 7021 (black grey)

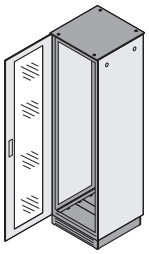

Colour combination RAL 7035 (light grey)/ RAL 7021 (black grey)

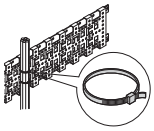

Cable tie

01005078

plastic, 92 mm x 2.5 mm, further dimensions see page 1.95

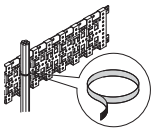

Velcro

01005079

black, length 300 mm, further dimensions see page 1.95

No.	Cabinet dimensions Height U	Height mm	Width mm	Depth mm	Cable tie PU 25 pieces supplied loose	Velcro PU 10 pieces supplied loose
Completely in RAL 7021						
1	29	1400	600	600	20118-351	20118-624
2	29	1400	600	800		
3	33	1600	600	600	20118-351	20118-624
4	33	1600	600	800		
5	33	1600	800	600	20118-351	20118-624
6	33	1600	800	800		
7	38	1800	600	600	20118-351	20118-624
8	38	1800	600	800		
9	38	1800	800	600	20118-351	20118-624
10	38	1800	800	800		
11	42	2000	600	600	20118-351	20118-624
12	42	2000	600	800		
13	42	2000	800	600	20118-351	20118-624
14	42	2000	800	800		
15	47	2200	600	600	20118-351	20118-624
16	47	2200	600	800		
17	47	2200	800	800	20118-351	20118-624
Colour combinations					AlZn	AlZn
18	29	1400	600	600	20118-351	20118-624
19	29	1400	600	800		
20	33	1600	600	600	20118-351	20118-624
21	33	1600	600	800		
22	33	1600	800	600	20118-351	20118-624
23	33	1600	800	800		
24	38	1800	600	600	20118-351	20118-624
25	38	1800	600	800		
26	38	1800	800	600	20118-351	20118-624
27	38	1800	800	800		
28	42	2000	600	600	20118-351	20118-624
29	42	2000	600	800		
30	42	2000	800	600	20118-351	20118-624
31	42	2000	800	800		
32	47	2200	600	600	20118-351	20118-624
33	47	2200	600	800		
34	47	2200	800	800	20118-351	20118-624

General components

Mechanics

from page 3.2

Electrics

from page 3.29

Power distribution

from page 3.50

Climate control

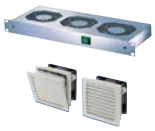

from page 4.0

Cabinets – VARISTAR Seismic ServicePLUS

ServicePLUS: solution - project examples

5430301007023

Mobile communications technology

- Slim-Line seismic cabinet with ETSI configuration
- NEBS base mounting
- Dynamic loading: 350 kg
- Shielded version (EMC)
- Complete cabling
- Power distribution
- Special cable entry in top cover
- Doors and side panels with ventilation openings

Content

Cabinets 1
Wall mounted cases 2
Accessories for cabinets and wall mounted cases . 3
Climate control . 4
Electronics cases 5
Subracks/ 19" chassis 6
Front panels, plug-in units ... 7
Systems 8
Power supply units 9
Backplanes ... 10
Connectors, front panel component system 11
Appendix 12

Cabinets – VARISTAR MIL

01012005

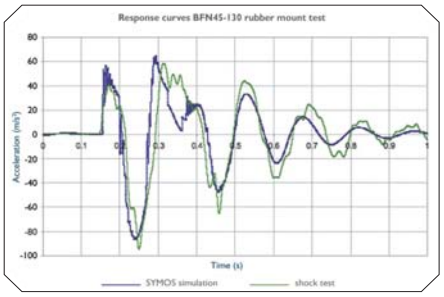

01010017 01010069

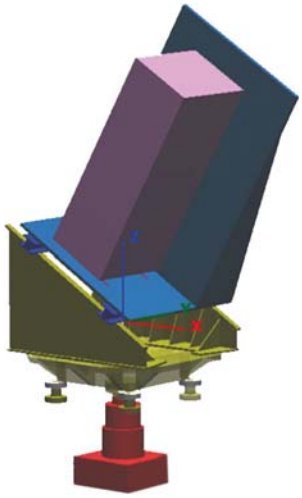

01010068

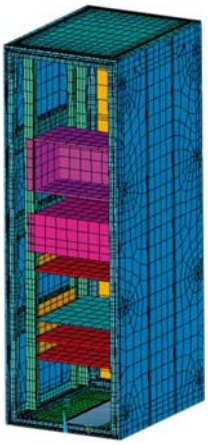

01010070

Finite element model - mesh and stress analysis

Economic and uncompromising - a tailored standard

Schroff offers robust 19" cabinets that meet the specifications of MIL-S-901D. Their characteristics allow you to meet the most stringent shock and vibration resistance requirements on the high seas:
This cabinet was developed on the basis of the VARISTAR platform and impresses with its high integration capability.

- High-performance elastomer or wire cable shock absorbers for COTS (commercial off-the-shelf) equipment
- 19" standard, in accordance with RoHS
- Various dimensions available (height and depth)
- Wide range of accessories available
- Reduced development and manufacturing costs
- HF shielding

From the qualification ... to the customer solution

A cabinet for your individual requirements can be quickly and easily developed. It can be validated by numerical simulation thereby saving lengthy and expensive tests in laboratory. The elastic suspension is specially adapted to the mechanical environment and the resilience of the components. At the same time, the dimensions and weight of the cabinet are tailored to your specific integration requirements. The design is validated using a model that has been calibrated in real tests using a finite element calculation.

Cabinets – VARISTAR MIL

Overview 1.120

The cabinet for the most demanding situations

- Certified: Tested to MIL 901D
- Capable of handling extreme stresses: Robust and secure for mobile use; dynamic load-carrying capacity of 150 kg
- Reliable: Shielded against high-frequency interference
- Not susceptible: Type of protection IP 55

01012002

VARISTAR with shock absorbers

- Two versions:
  4 shock absorbers at bottom and 2 at top, for wall mounting
  - With wire cable shock absorbers
  - with elastomer shock absorbers
- Height 38 U (1800 mm), width 600 mm, depth 800 mm

30407004

ServicePLUS from page 1.123

e.g. special colours
e.g. other cabinet dimensions
e.g. higher dynamic load carrying capacity
e.g. custom solutions

www.schroff.biz/ServicePLUS

VARISTAR MIL
VARISTAR
MIL 901D 1.122

ServicePLUS ... 1.123

VARISTAR
Electronics 1.10
VARISTAR
EMC 1.54
VARISTAR
Datacom and
Networking
Technology 1.124
VARISTAR Air/
water heat
exchanger 1.224

Cabinets – VARISTAR MIL

MIL 901D cabinets

01012004

Wire cable shock absorbers

01011001

Elastomer shock absorbers

01011003

Wire cable shock absorbers

01012003

Rear view

- Cabinet for extreme mobile situations
- 4 shock absorbers at bottom and 2 shock absorbers at top
- Ingress protection IP 55
- EMC protection
- Tested to MIL-STD-901D
- Rear panel horizontally partitioned for fitting of e.g. cable ducting

Delivery comprises (assembled)

Item	Qty	Description
1	1	Welded basic frame, heavy duty, St profile, RAL 7032, with reinforcement brackets welded on floor frame, 10 mm, St, finish AlZn; base plate, St; 4 shock absorbers; EMC gasket
2	1	Flat top cover, flush, St, finish AlZn, exterior RAL 7032
3	1	Front door, St, finish AlZn, RAL 7032, 180° hinge, 4-point locking, lever handle
4	1	Rear panel, top, screw fixed, St, finish AlZn, RAL 7032; 2 shock absorbers;
5	1	Rear panel, centre, screw fixed, St, finish AlZn, RAL 7032
6	1	Rear panel, bottom, screw fixed, St, finish AlZn, RAL 7032
7	2	Side panel, screw fixed, St, AlZn, RAL 7032
8	4	19" panel/slide mount with EIA perforation, St, finish AlZn, depth-adjustable in 25 mm increments
9	1	GND/earthing kit, assembled

Order Information

Height U	Height mm	Width mm	Depth mm	Description	Part no.
38	1800	600	800	With wire cable shock absorbers	10130-198
38	1800	600	800	with elastomer shock absorbers	10130-201

Note

- Other dimensions and versions on request

Cabinets – VARISTAR MIL

solution — **Simple. Fast. From one source.**

Integration and custom developments

- Climate control, complete construction, cabling (power supply), function test
- Special sizes, customised solutions

academy — **Knowledge. Sharing. Partnerships.**

Knowledge transfer and partnership

- Seminars, white papers, CAD drawings, test reports, user reports
- Further information: www.varistar.co.uk

lifecycle — **We are with you. For the entire product life. the product.**

Flexible support throughout the product lifecycle

- Delivery to point of use, installation service, exchange service, replacement parts

32403011 01008022

Mobile applications for marine use

- Heavy-Duty seismic cabinet with shock absorbers for use on ships
- Shielded version (EMC)
- Special connection plate for shielded cable entry
- Integrated air filtered fan in the door
- Power distribution
- Customer-specific testing (vibration, EMC, climate)

PENTAIR

Content

Cabinets 1

Wall mounted cases 2

Accessories for cabinets and wall mounted cases . 3

Climate control . 4

Electronics cases 5

Subracks/ 19" chassis 6

Front panels, plug-in units ... 7

Systems 8

Power supply units 9

Backplanes ... 10

Connectors, front panel component system 11

Appendix 12

Cabinets – Varistar Datacom/Networking

01006049

01006023

Professional cable management

01006033

Robust pull-out tilt protection

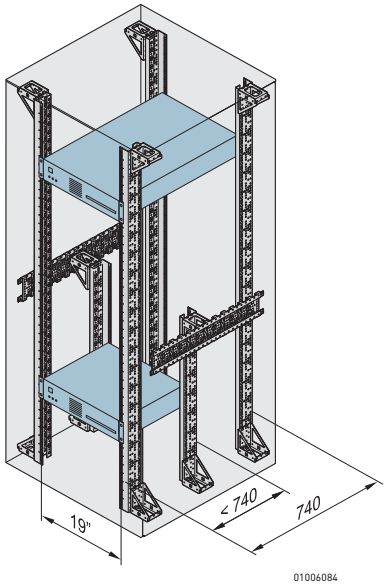

01006084

Universal mounting possibility: With a mounting space of 740 mm between front and rear 19" plane in the standard version, around 90 % of all server types can be fitted immediately.
Easy installation of servers with special dimensions by additional partial-height mounting and further 19" brackets.

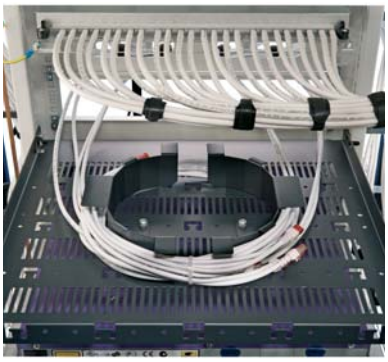

01006024

Large variety of accessories for all cabling zones

01006032

Heavy load shelves and slide rails

Cabinets – VARISTAR Datacom/Networking

Overview 1.124

Made for datacom and cabling technology

- Two frames with different stability but identical outer appearance
- Two colour schemes for immediate selection with ServicePLUS
- Wide range of versions and dimensions (depths 600 mm to 1200 mm)
- Unique meander profile with multiple mounting options and new cable management possibilities

Varistar NET

01006012

- Cabling cabinet with one 19" plane
- Single and side-by-side cabinets

Varistar NET Plus

01006011

- Datacom cabinet with two 19" planes and base
- Single and side-by-side cabinets

Varistar Server

01006014

- Server cabinet with perforated front and rear door, up to 1200 mm deep
- Single and side-by-side cabinets

30407004

ServicePLUS from page 1.156

e.g. individual configuration and assembly
e.g. modifications (cut-outs, special colours)
e.g. variants of uprights (Slim-Line, Heavy-Duty)
e.g. custom solutions (special sizes)

www.schroff.biz/ServicePLUS

Varistar Platform 1.4
Dimensions 1.8

Varistar NET..... 1.126
Varistar NET Plus 1.130
Varistar Server... 1.130
Assembly kit 1.132
Castors..... 1.132
Lifting eye 1.133
Top cover fan ... 1.133
Edge protection . 1.136
Brush strip 1.136
Base plate 1.137
Base/plinth 1.139
Tilt protection ... 1.141
19 panel/slide mounts 1.142
Depth members . 1.143
Slide rails..... 1.144
19" shelves 1.145
Electronic locking 1.148
Zone 1, zone 2 cable management 1.155
Zone 3 cable management 1.158
Zone 4 cable management 1.161
Cable tie, Velcro 1.162
Tray for excess cable lengths ... 1.163

ServicePLUS ... 1.164
ServicePLUS RAL 7021 ..... 1.165
ServicePLUS RAL 7035/RAL 7021 ... 1.189

Varistar Electronics 1.10
Varistar EMC. 1.54
Varistar Seismic . 1.84
VARISTAR air/water heat exchanger 1.224

Varistar server, 1600 kg

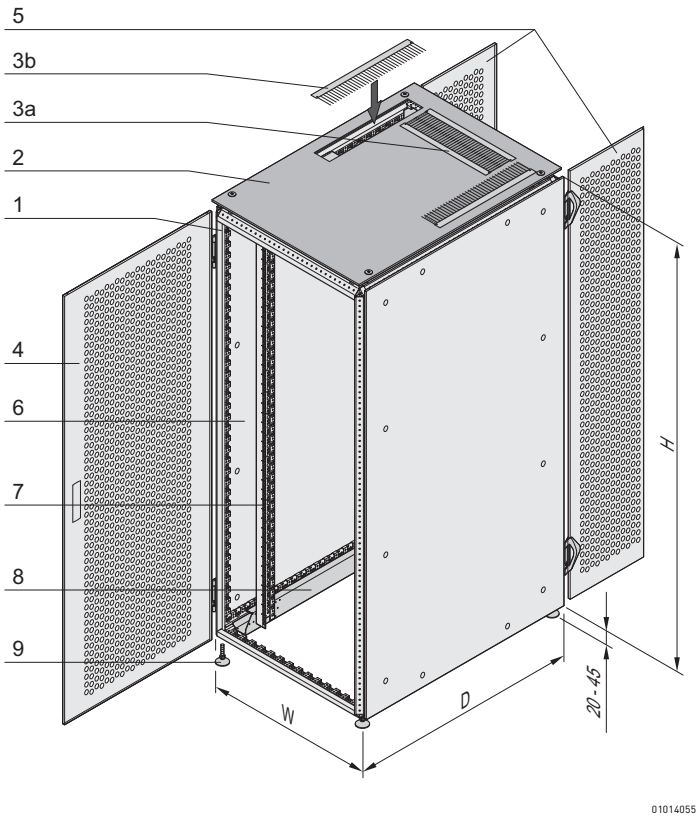

- Server cabinet with perforated doors, airflow rate 78%
- Protection class IP 20
- Static load-carrying capacity up to 1600 kg
- Installation of different servers possible
- Available in two color schemes
  - Stone gray RAL 7021
  - Light gray RAL 7035

Delivery includes

Item	Qty	Description
1	1	Welded basic frame (Slim-Line) from steel profiles, RAL 7021
2	1	Flat top cover, St, RAL 7021; with cutouts for brush strips
3a	1	Brush strip for 600 mm and 800 mm widths
3b	1	Brush strip for 800 mm width only
4	1	Front door, St, with 180° hinges and perforation, 3-point locking and lever handle (can optionally be expanded with DIN profile half cylinder), color RAL 7035 or RAL 7021 (see Ordering Information)
5	1	Rear double door, St, with 180° hinges and perforation, 3-point locking and lever handle (can optionally be expanded with DIN profile half cylinder), color RAL 7035 or RAL 7021 (see Ordering Information)
6	2	Side panels, screw fixed, St, with inside locking, color RAL 7035 or RAL 7021 (see Ordering Information)
7	4	19" panel/slide mounts, St, mounted in 740 mm intervals, color RAL 7035 or RAL 7021 (see Ordering Information)
8	4	Cross member, St (to accept 19" panel/slide mounts in 800 mm wide cabinets)
9	4	Adjustable foot
10	1	Earthing kit, fitted

Cabinets – VARISTAR Datacom/Networking

Varistar server, 1600 kg

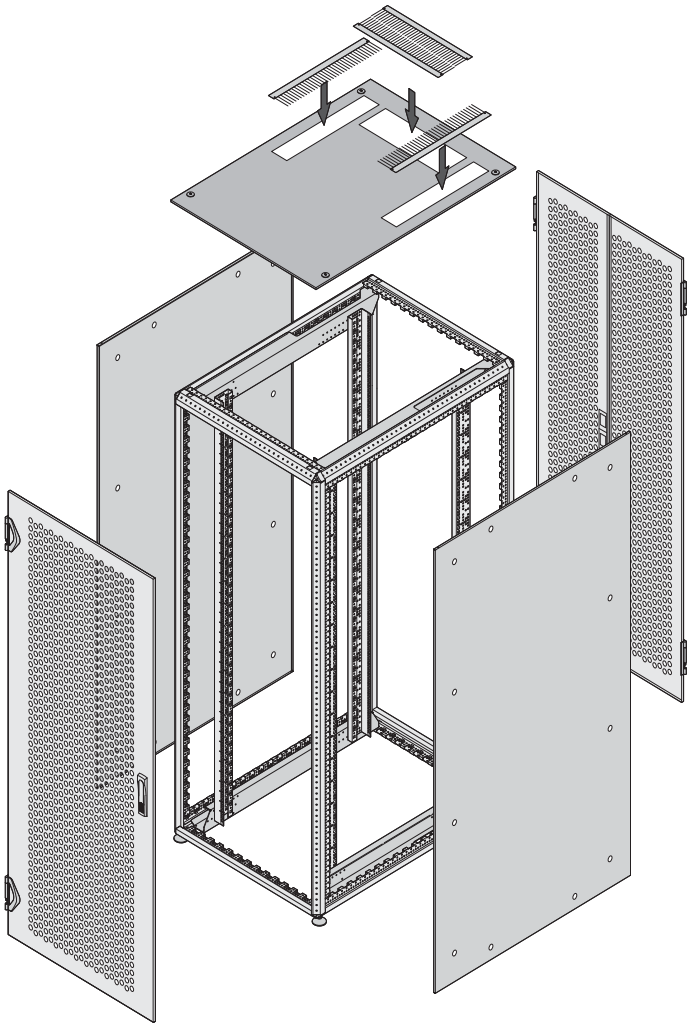

ServicePLUS see page 1.164

Order Information

Height U	Height H mm	Width W mm	Depth D mm	Colour	Part no.
42	2000	600	1200	Stone gray RAL 7021	10130-234
42	2000	800	1200		10130-232
47	2200	600	1200		10130-235
47	2200	800	1200		10130-233
42	2000	600	1200	Light gray RAL 7035	10130-240
42	2000	800	1200		10130-238
47	2200	600	1200		10130-241
47	2200	800	1200		10130-239

Accessories	
DIN profile half cylinder, common locking for lever handle (1 key fits all locks) incl. 2 keys	**25127-995**
Spare key Handle with locking insert (6) 1 piece	**60127-018**
Tip-over protection for floor mounting is screwed to the floor, PU 2 pieces	**23130-386**

Cabinets – VARISTAR Datacom/Networking

Varistar Colocation

01013001

Illustration shows cabinet with 3 divider units

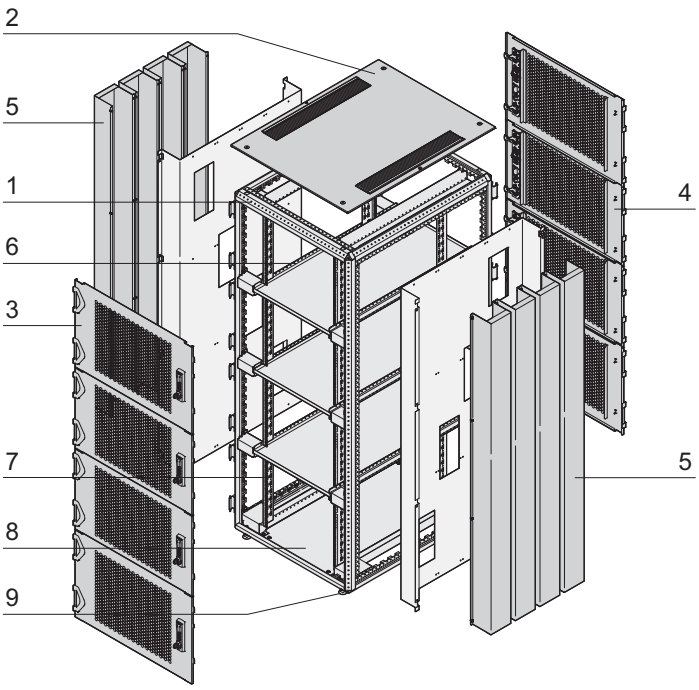

01013050

01013002

Detail of a divider unit

- Colocation cabinets with 2, 3 or 4 divider units to accommodate e.g. servers
  - Perforated doors (airflow rate 78%)
  - Multi-point door locking to prevent unauthorized access (lever handle with key and numeric code)
  - Access to false floors and cabling only from the appropriate divider unit
- Flexible cabling, possible from above, below, left or right (data and power cables can be run separately)
- Protection class IP 20
- Color RAL 7021 (black gray)

Delivery includes

Item	Qty	Description
1	1	Welded basic frame (Slim-Line) from steel profiles, RAL 7021
2	1	Flat top cover, St, RAL 7021, with brush strip (left and right)
3	2 per divider unit	Front door, rack St, perforated, RAL 7035, 180° hinge, 2-point locking and lever handle (key and numeric code)
4	2 per divider unit	Rear door, St, perforated, RAL 7021, 180° hinge, 2-point locking and lever handle (key and numeric code)
5	2 per divider unit	Cable channels, left and right
6	2 per divider unit	Depth member for fixing false floors and 19" profiles
7	4 per divider unit	19" panel, St, RAL 7035, with EIA perforation, depth-adjustable in 25 mm increments, standard fitting position 74 mm recessed
8	2 per divider unit	Base plate can be mounted from inside
9	4	Adjustable foot
10	1	Earthing kit, fitted

Cabinets – VARISTAR Datacom/Networking

Varistar Colocation

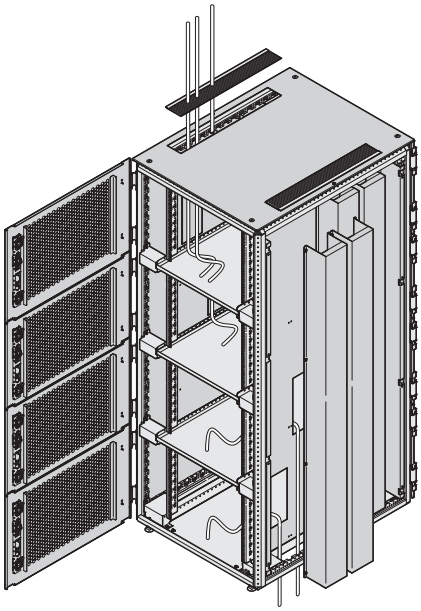

01013051

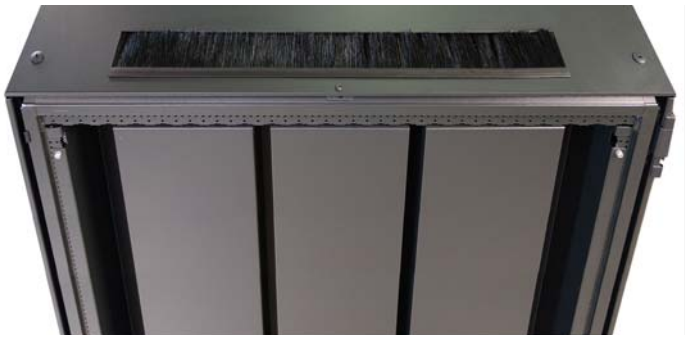

01013004

Illustration: Cable panel, two-sided through entire cabinet height, cable entry top/bottom

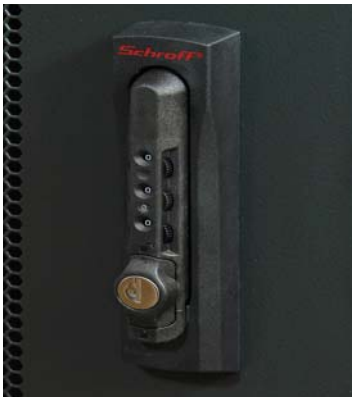

01013003

Detail: Lever handle with numeric code

ServicePLUS see page 1.164

Order Information

Height mm	Width mm	Depth mm	Number of subdivisions	Part no.
2000	600	1000	2	10130-202
2000	600	1000	3	10130-203
2000	600	1000	4	10130-204
2000	600	1200	2	10130-214
2000	600	1200	3	10130-215
2000	600	1200	4	10130-216
2000	800	1000	2	10130-205
2000	800	1000	3	10130-206
2000	800	1000	4	10130-207
2000	800	1200	2	10130-217
2000	800	1200	3	10130-218
2000	800	1200	4	10130-219
2200	600	1000	2	10130-208
2200	600	1000	3	10130-209
2200	600	1000	4	10130-210
2200	600	1200	2	10130-220
2200	600	1200	3	10130-221
2200	600	1200	4	10130-222
2200	800	1000	2	10130-211
2200	800	1000	3	10130-212
2200	800	1000	4	10130-213
2200	800	1200	2	10130-223
2200	800	1200	3	10130-224
2200	800	1200	4	10130-225

Note

- Side panel must be ordered separately
- For suitable side panel see page 1.167
- Cable panel, see page 1.160

Cabinets – VARISTAR Datacom/Networking

Varistar NET Plus

Side-by-side cabinet (without side panel) Single cabinet

- Cabling cabinet with two 19" planes and base/plinth
- Type of protection IP 20
- Load-carrying capacity 400 kg according IEC 61587-1
- Available in two versions
  - Single cabinet (with side panels)
  - Side-by-side cabinet (with side-by-side mounting kit)

Delivery comprises (Completely assembled and earthed)

Item	Qty	Description
1	1	Welded basic frame (Slim-Line) from steel profiles, RAL 7021
2a	1	From cabinet height 42 U/47 U: top cover, St, RAL 7021 with prepunched perforation for subsequent assembly of brush strip, perforated cover plate or fan tray
2b	1	Cabinet height 24 U: top cover, St, RAL 7021, without cut-out zone
3	1	Front door: frame St, RAL 7035, with safety glass 6 mm and 180° hinge, single point locking and lever handle (optionally with DIN profile half cylinder)
4	1	Rear door, St, RAL 7035, with 180° hinge, single point locking and lever handle (optionally retrofittable with DIN profile half cylinder)
5a	2	Single cabinet: side panels, St, RAL 7035, with quick-release fastener
5b	1	Side-by-side cabinet: 1 side-by-side mounting kit
6	4	Adaptor bracket for reduced width, St, finish AlZn, for assembly of 19" panel/slide mounts (only with 800 mm wide cabinets)
7	4	19" panel/slide mount, St, RAL 7035, with EIA perforation (800 mm wide cabinets: assembled on the adaptor bracket for reduced width), 600 mm cabinet depth: distance to front door 50 mm, at 800 mm 150 mm, from 900 mm cabinet depth: 70 mm; depth-adjustable in 25 mm increments
8	1	Base plate for lateral cable ducting, St, RAL 7021, subsequent lateral assembly of brush strip possible
9	1	Base/plinth, St, RAL 7021, height 100 mm with front and rear ventilation trim, mounted base/plinth trims, integrated feet
10	1	GND/earthing kit, assembled

Cabinets – VARISTAR Datacom/Networking

Varistar NET Plus

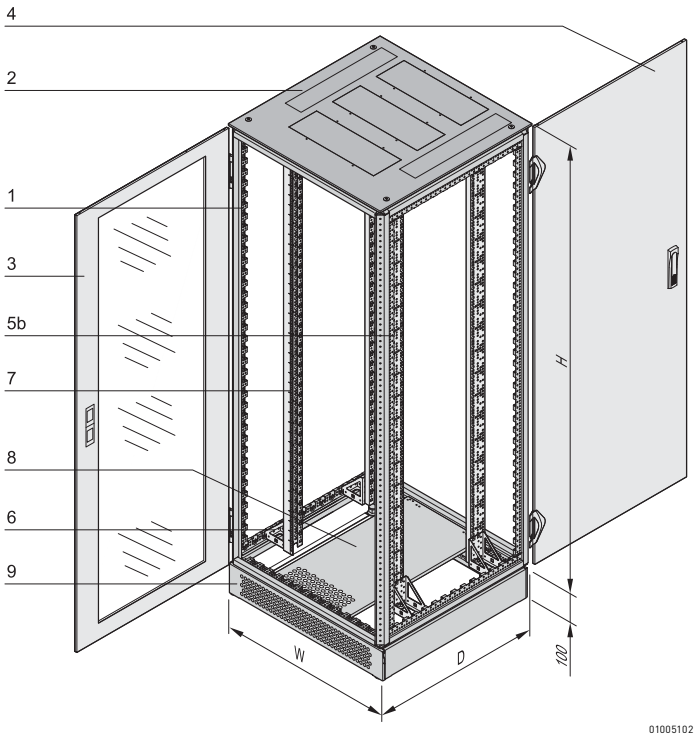

Side-by-side cabinet

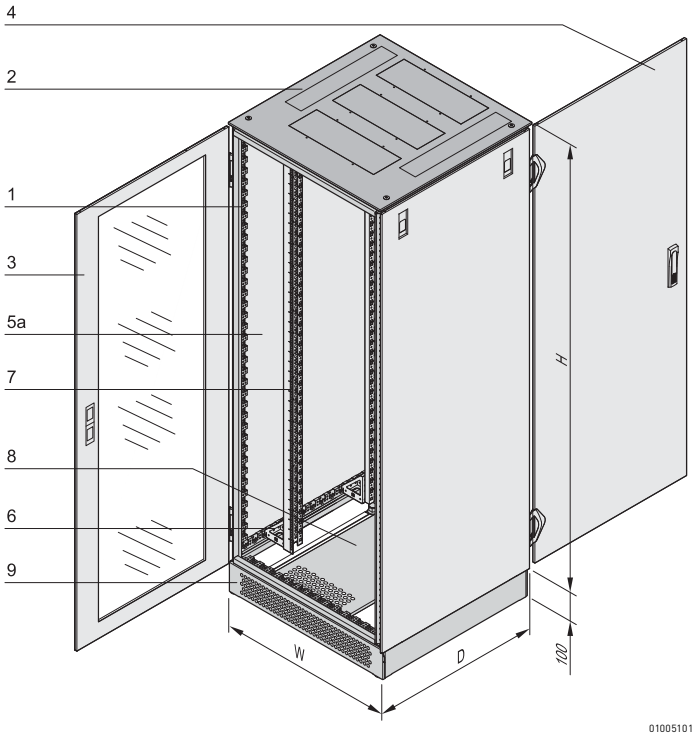

Single cabinet

ServicePLUS see page 1.164

Order Information

Height U	Height H mm	Width W mm	Depth D mm	Side-by-side cabinet Part no.	Single cabinet Part no.
24	1200	600	600	**10130-073**	**10130-072**
24	1200	600	800	10130-075	10130-074
24	1200	600	900	10130-077	10130-076
24	1200	600	1000	10130-079	10130-078
24	1200	800	600	10130-081	10130-080
24	1200	800	800	**10130-083**	**10130-082**
24	1200	800	900	10130-085	10130-084
24	1200	800	1000	10130-087	10130-086
42	2000	600	600	10130-089	10130-088
42	2000	600	800	10130-091	10130-090
42	2000	600	900	10130-093	10130-092
42	2000	600	1000	10130-095	10130-094
42	2000	800	600	10130-097	10130-096
42	2000	800	800	**10130-099**	**10130-098**
42	2000	800	900	10130-101	10130-100
42	2000	800	1000	10130-103	10130-102
47	2200	600	600	10130-105	10130-104
47	2200	600	800	10130-107	10130-106
47	2200	600	900	10130-109	10130-108
47	2200	600	1000	10130-111	10130-110
47	2200	800	600	10130-113	10130-112
47	2200	800	800	10130-115	**10130-114**
47	2200	800	900	10130-117	10130-116
47	2200	800	1000	10130-119	10130-118
DIN profile half cylinder, common locking for lever handle (1 key fits all locks) incl. 2 keys					**25127-995**
Tilt protection for base mounting is screwed to the floor, PU 2 pieces					**23130-386**

Note

- The 24 U cabinet has a top cover without prepunched perforation (not suitable for retrofitting with brush strips, fan tray, etc.)
- A standard cabinet can be expanded simply with additional components, see from page 1.189

Assembly kit

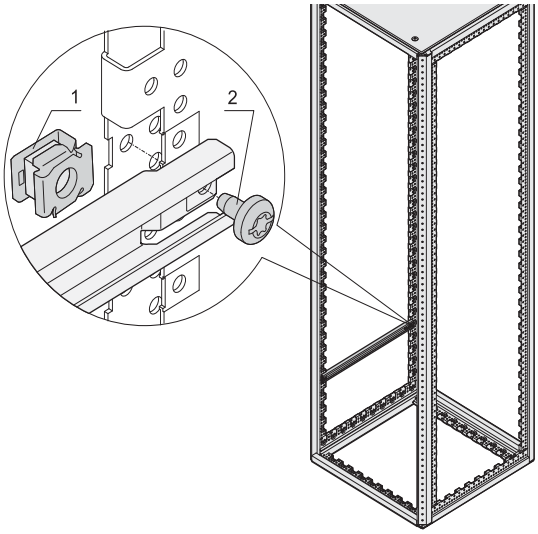

01006065

- For direct assembly of 19" panel/slide mounts, depth members and further components on Varistar frame
- Assembly by clipping in the cage nut into frame or depth member
- Mounting of components possible from the inside as well as from the outside

Delivery comprises (Kit)

Item	Qty	Description
1	50	Cage nut, St, M5, white zinc-plated
2	50	Screw, St, M5 x 10, white zinc-plated

Order Information

Description	Part no.
Assembly kit, earthed	23130-141

Castors

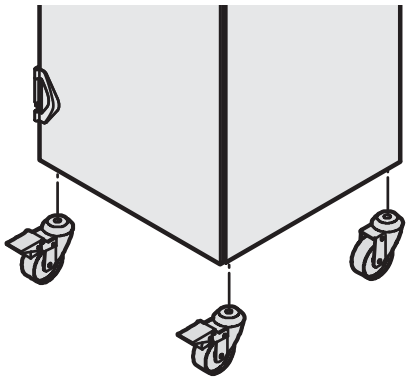

01004082

- For assembly on frame
- Load-carrying capacity 400 kg

Delivery comprises

Item	Qty	Description
1	2	Locking castor, PA/St
2	2	Non-locking castor, PA/St
3	1	Assembly kit

Order Information

Description	Part no.
Castors with 2 locking	23130-077

Note

- Not suitable in connection with base/plinth

Castors with integrated adjustable feet

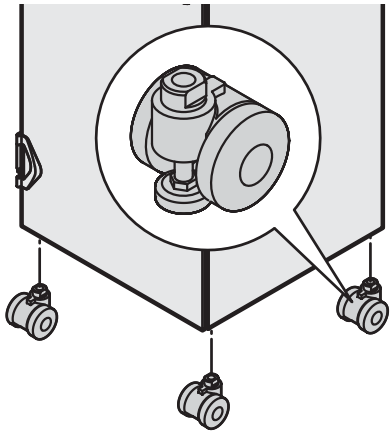

01004156

- For assembly on frame
- Load-carrying capacity 400 kg

Delivery comprises

Item	Qty	Description
1	4	Castor with adjustable feet
2	1	Assembly kit

Order Information

Description	Part no.
Castors with integrated adjustable feet	23130-078

Note

- Not suitable in connection with base/plinth

Cabinets – VARISTAR Datacom/Networking

Lifting eye, Varistar

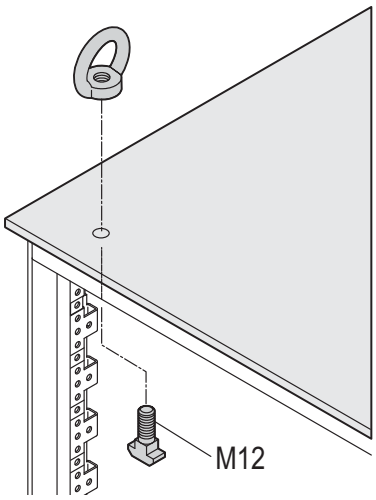

01004100

- Thread M12
- Application and static load-carrying capacity in accordance with DIN 582 (see Technical Info Section, chapter 12)

Order Information

Description	Qty/PU	Part no.
Lifting eye for top cover	4	**23130-072**

Note

- Only suitable with top cover, not usable with raised cover

Fan unit with 3 fans

01006027

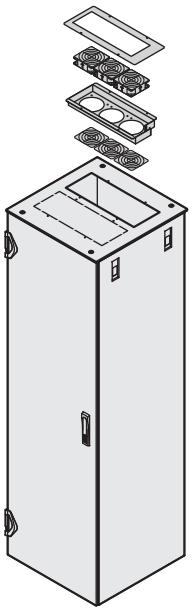

01004102

- Suitable for flat top cover with cut-out zones
- Mounting position completely in cabinet interior, no protrusion over top cover
- 3 fans fully wired
- Mains connection via SCHUKO/UTE plug - IEC 60320 C13 socket

Delivery comprises (completely assembled and wired)

Item	Qty	Description
1	1	Fan tray, RAL 7021
2	3	Axial fan 230 V_{AC}, fully wired, connects via SCHUKO/UTE plug - IEC 60320-C12 socket
3	3	Protective grille
4	1	Assembly kit

Order Information

Description	Qty/PU pieces	Part no.
Fan unit with 3 fans	1	**23130-070**
Accessories		
Fan with grille, 230 V_{AC}, 38 x 119 x 119 mm, 162 m^3/h at 50 Hz, 1 piece		**23130-165**
Thermostat with mains cable 230 V_{AC} (SCHUKO/UTE plug/ IEC 60320 C13 socket), adjustment range 0 ... 60°C, 1 piece		**20118-750**

Technical data of one fan

Frequency	50 Hz	60 Hz
Voltage	230 V_{AC}	230 V_{AC}
Airflow volume	162 m^3/h	192 m^3/h
Noise pressure level	37 dB(A)	41 dB(A)
Max. static pressure	73 PA	88 PA
Max. ambient temperature	+70 °C	+70 °C
Power consumption	15 W	14 W

Flat top cover with cut-out zones

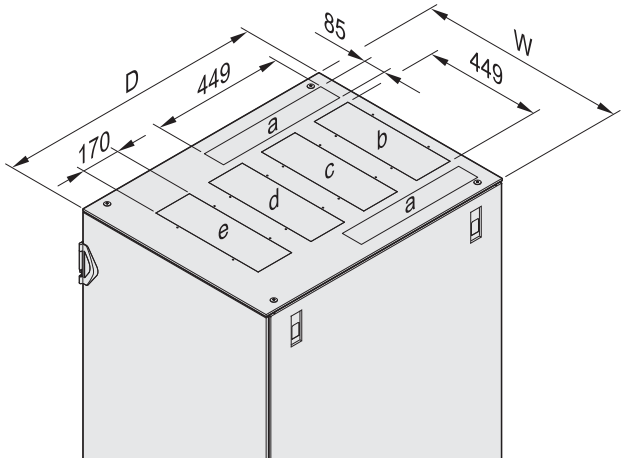

01006097

- Cut-out zones are easy to cut out.
- Cut-outs can be fitted with brush strips, fan units, perforated cover plates or edge protectors

Delivery includes

Item	Qty	Description
1	1	Flat top cover, St, 1.5 mm, with cut-out zones for cut-outs, RAL 7021
2	1	GND/earthing kit

Order Information

Width mm	Depth mm	Part no. RAL 7021
600	600	21130-252
600	800	21130-253
600	900	21130-254
600	1000	21130-255
600	1100	21130-542
600	1200	21130-543
800	600	21130-256
800	800	21130-257
800	900	21130-258
800	1000	21130-259
800	1100	21130-544
800	1200	21130-545
Accessories		
Brush strip Nylon, black, PU 2 pieces		**23130-069**
Fan unit with 3 fans with 3 fans, fully assembled and wired, 1 kit		**23130-070**
Perforated cover plate for top cover with cut-out zones 6 mm perforation, incl. earthing, 1 piece		**23130-071**
Edge protection PVC, black, 3 m PVC, black, 3 m, 1 piece		**28127-281**

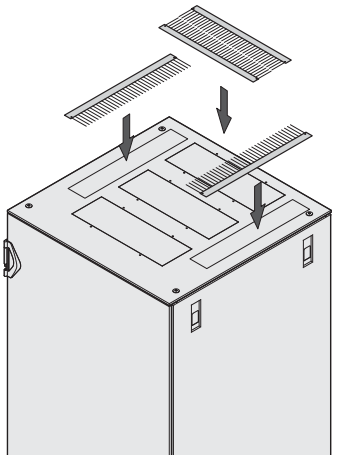
01006092

Flat top cover construction with brush strips

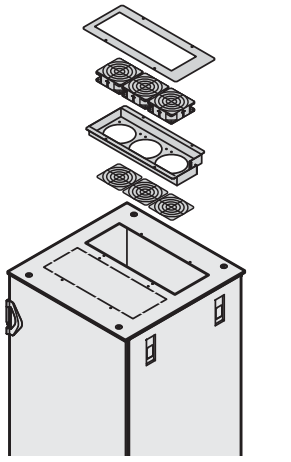
01004102

Flat top cover construction with fan insert

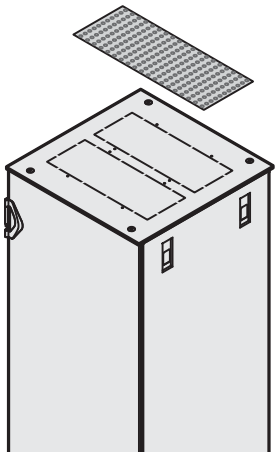
01004103

Flat cop cover construction with cover plate

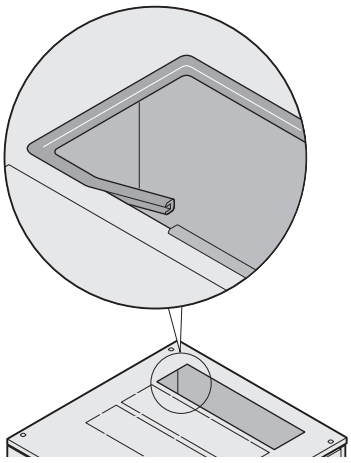
41003065

Flat top cover construction with edge protection

Cabinets – VARISTAR

Flat top cover with cable through-ducting openings

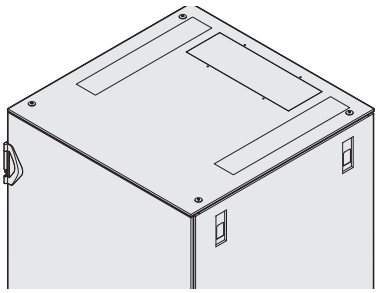

01015052

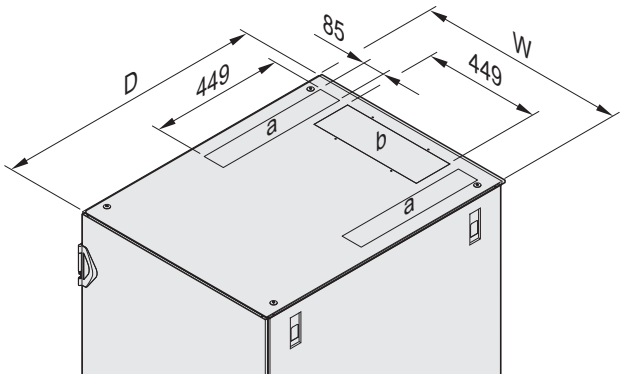

01015050

Flat top cover construction with brush strips

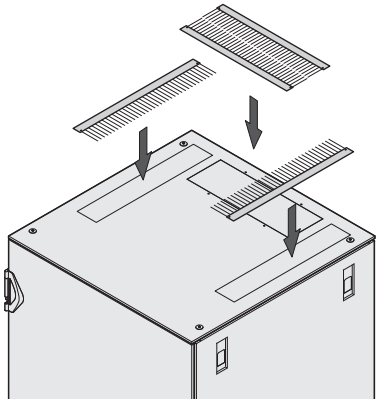

01015051

Edge protector

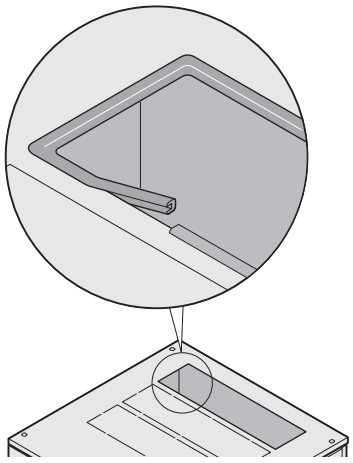

41003065

- Includes earthing
- Color RAL 7021
- St, 1.5 mm
- Cutouts must be covered with brush strips, please order these separately

Delivery includes

Item	Qty	Description
1	1	Flat top cover, St, 1.5 mm, with cutouts, RAL 7021
2	1	GND/earthing kit

Order Information

Width W	Depth D	Part no.
mm	mm	
600	1000	21130-712
600	1100	21130-713
600	1200	21130-714
800	1000	21130-715
800	1100	21130-716
800	1200	21130-717
Accessories		
Brush strip Nylon, black, PU 2 pieces		**23130-069**
Edge protection PVC, black, 3 m PVC, black, 3 m, 1 piece		**28127-281**

Note

- Fan insert with 3 fans (23130-070) cannot be used

Edge protection PVC, black, 3 m

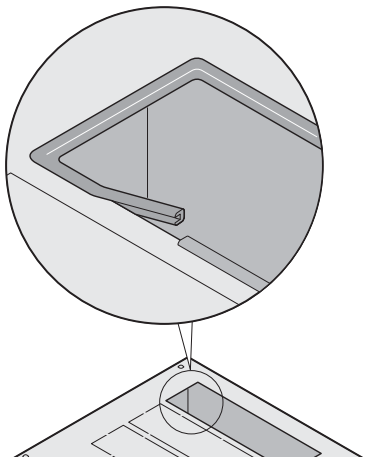

41003065

- Suitable for flat top cover with cut-out zones
- To cover the sharp edges of an open cut-out (protects against injury)

Order Information

Description	Part no.
Edge protection PVC, black, 3 m	28127-281

Brush strip

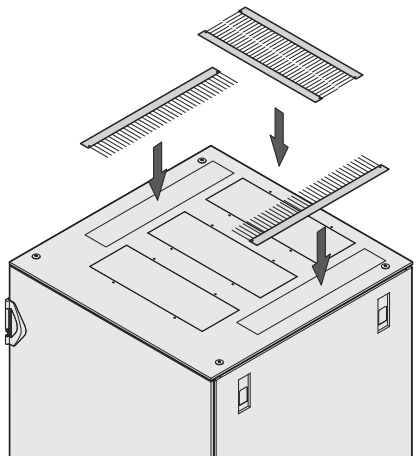

01006092

- For cable ducting with flat top cover (with cut-out zones)
- 600 mm wide top cover: two brush strips cover one centre cut-out
- 800 mm wide top cover: brush strip can be used either lengthways or depthways; one brush strip covers a lateral cut-out, two brush strips cover a centre cut-out

Order Information

Description	Qty/PU	Part no.
Brush strip	2	23130-069

Cover plate perforated for top cover with cut-out zones

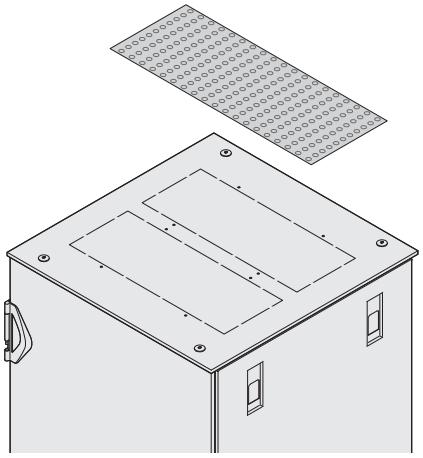

01009056

- Suitable for flat top cover (with cut-out zones), screwed-fixed
- Provides heat dissipation from cabinet (with 6 mm perforations)

Delivery comprises

Item	Qty	Description
1	1	Top cover plate, perforated, 6 mm perforation, St, 1 mm, RAL 7021, incl. GND/earthing
2	1	Assembly kit

Order Information

Description	Qty/PU	Part no.
Perforated cover plate for top cover with cut-out zones	1	23130-071

Cabinets – VARISTAR Datacom/Networking

Base plate, multi-piece

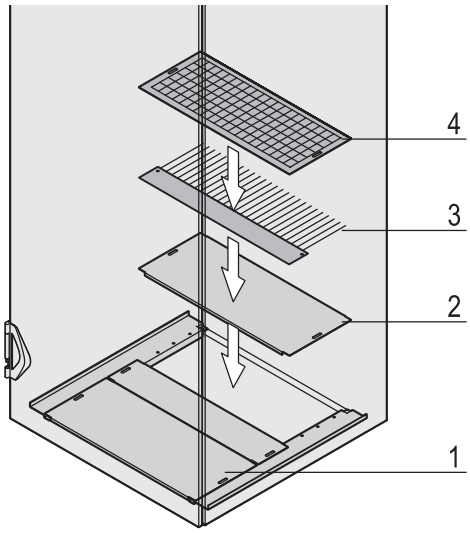

1: Base plate, multi-piece; 2: Cover plate; 3: Brush strip; 4: Filter kit

- The multi-piece base plate is open at the rear
- The opening may be completed
  - with a filter mat
  - with a brush strip for the cable entry
  - with a cover plate

Delivery comprises (kit)

Item	Qty	Description
1	1	Multi-piece base plate, St, 1.5 mm, RAL 7021
5	1	Assembly kit

Order Information

Width mm	Depth mm	Part no.
600	600	**23130-001**
600	800	**23130-002**
600	900	**23130-003**
600	1000	**23130-004**
600	1200	23130-359
800	600	**23130-005**
800	800	**23130-006**
800	900	**23130-007**
800	1000	**23130-008**
800	1200	23130-361
Item 2 Cover plate for multi-piece base plate, for 600 mm wide cabinets, 200 mm deep, incl. assembly kit, 1 piece		**23130-076**
Item 2 Cover plate for multi-piece base plate, for 800 mm wide cabinets, 200 mm deep, incl. assembly kit, 1 piece		**23130-136**
Item 3 Brush strip for base plate, for 600 mm wide cabinets, 200 mm deep, incl. assembly kit, 1 piece		**23130-074**
Item 3 Brush strip for base plate, for 800 mm wide cabinets, 200 mm deep, incl. assembly kit, 1 piece		**23130-134**
Item 4 Filter mat for base plate, white, class M1 in accordance with EN 799-G3, for 600 mm wide cabinets, 200 mm deep, incl. assembly kit, 1 piece		**23130-075**
Item 4 Filter mat for base plate, white, class M1 in accordance with EN 799-G3, for 800 mm wide cabinets, 200 mm deep, incl. assembly kit, 1 piece		**23130-135**

Note

- Is assembled from inside
- Please order cover plate, brush strip or filter mat separately

Base plate for lateral cable ducting

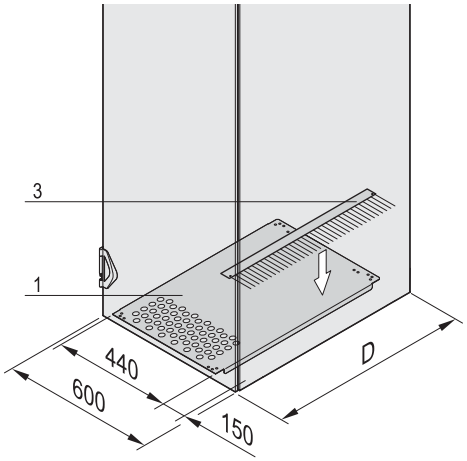

Cabinet width 600 mm

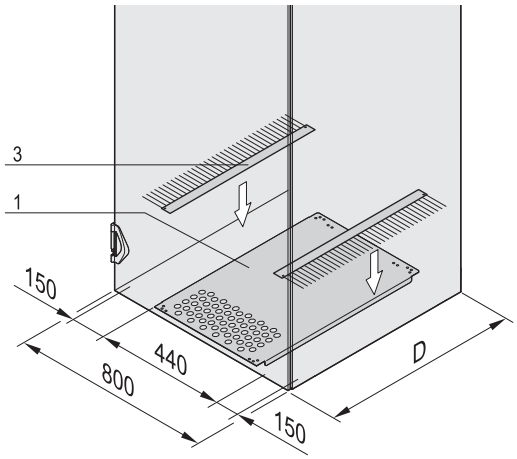

Cabinet width 800 mm

- The base plate is open on the side; the opening can be covered with a brush strip (cabinet width 600 mm) or two brush strips (cabinet width 800 mm)
- Perforated at front for better heat dissipation

Delivery comprises

Item	Qty	Description
1	1	Base plate, St, 1.5 mm, width 440 mm, RAL 7021
2	1	Assembly kit

Order Information

For cabinet width W mm	Depth D mm	Part no.
600 / 800	600	**23130-378**
600 / 800	800	**23130-353**
600 / 800	900	**23130-354**
600 / 800	1000	**23130-355**
600 / 800	1200	23130-357
Item 3 Brush strip for base plate for lateral cable ducting, cabinet depth 600 mm, 200 mm wide, incl. assembly kit, 1 piece		**23130-074**
Item 3 Brush strip for base plate for lateral cable ducting, cabinet depth 800 mm, 200 mm wide, incl. assembly kit, 1 piece		**23130-134**
Item 3 Brush strip for base plate for lateral cable ducting, cabinet depth 900 mm, 200 mm wide, incl. assembly kit, 1 piece		**23130-374**
Item 3 Brush strip for base plate for lateral cable ducting, cabinet depth 1000 mm, 200 mm wide, incl. assembly kit, 1 piece		**23130-375**
Item 3 Brush strip for base plate for lateral cable ducting, cabinet depth 1200 mm, 200 mm wide, incl. assembly kit, 1 piece		**23130-377**

Note

- Is assembled from inside
- Please order cover plate, brush strip or filter mat separately

Cabinets – VARISTAR Datacom/Networking

Stationary base/plinth

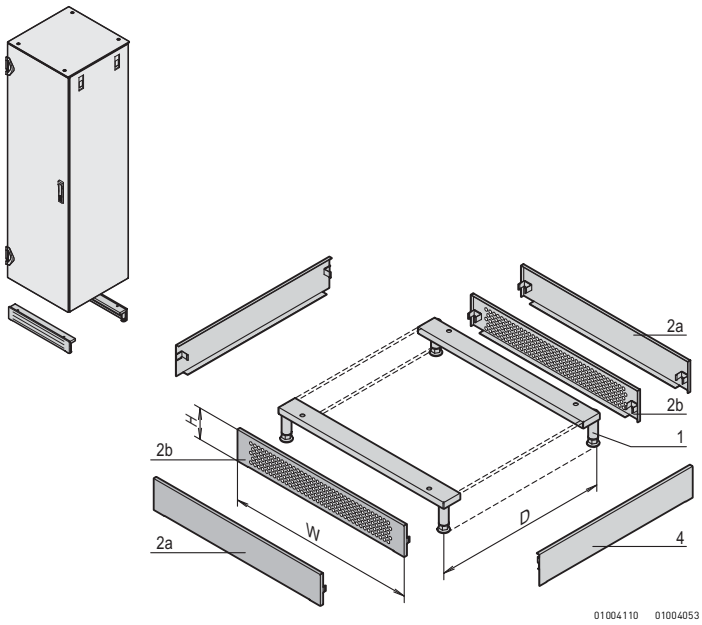

D = cabinet depth

- Static load-carrying capacity 1000 kg
- Removable trims allow cable entry from all sides
- Cannot be used in conjunction with castors
- Plinth height 100 mm, with feet adjustable from 112 to 132 mm
- Versions
  - Front/rear trim perforated
  - Front/rear trim solid

Delivery comprises ((kit))

Item	Qty	Description
1	2	Support with feet, St, 3 mm
2a	2	Solid trim, St, 1.5 mm, RAL 7021
2b	2	Perforated trim, St, 1.5 mm, RAL 7021
3	1	Assembly kit

Order Information

For cabinet width W mm	Front/rear trim	Part no.
600	perforated	**23130-187**
600	plain	23130-387
800	perforated	**23130-194**
800	plain	23130-388
Item 4 Side trim height 100 mm, depth 600 mm, PU 2 pieces		**23130-169**
Item 4 Side trim height 100 mm, depth 800 mm, PU 2 pieces		**23130-170**
Item 4 Side trim height 100 mm, depth 900 mm, PU 2 pieces		**23130-171**
Item 4 Side trim height 100 mm, depth 1000 mm, PU 2 pieces		**23130-172**
Item 4 Side trim height 100 mm, depth 1200 mm, PU 2 pieces		23130-363

Note

- Please order side trims (item 4) separately

Mobile base/plinth

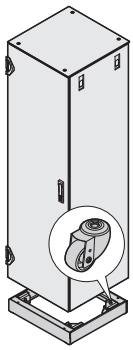

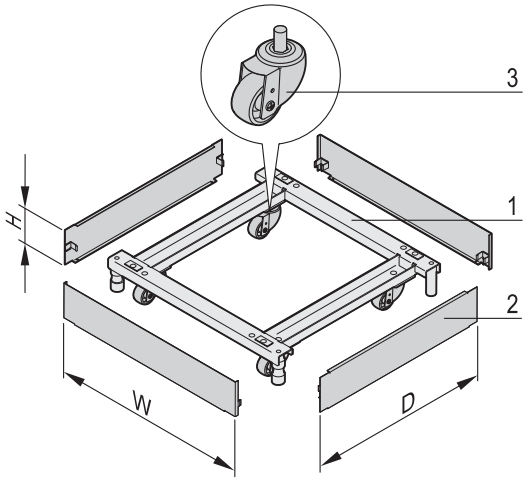

- Load-carrying capacity on castors 400 kg, on adjustable feet 1000 kg
- Plinth height H = 100 mm, with feet adjustable from 126 to 134 mm

Delivery comprises

Item	Qty	Description
1	1	Frame, St, 3 mm, RAL 7021, with adjustable feet
2	4	Trim, St, 1.5 mm, RAL 7021
3	4	Castor
4	1	Assembly kit

Order Information

For cabinet width W mm	For cabinet depth D mm	Part no.
600	600	**23130-208**
600	800	**23130-209**
600	900	**23130-210**
600	1000	**23130-211**
600	1200	23130-369
800	600	**23130-212**
800	800	**23130-213**
800	900	**23130-214**
800	1000	**23130-215**
800	1200	23130-371

Cabinets – VARISTAR Datacom/Networking

Telescopic tilt protection

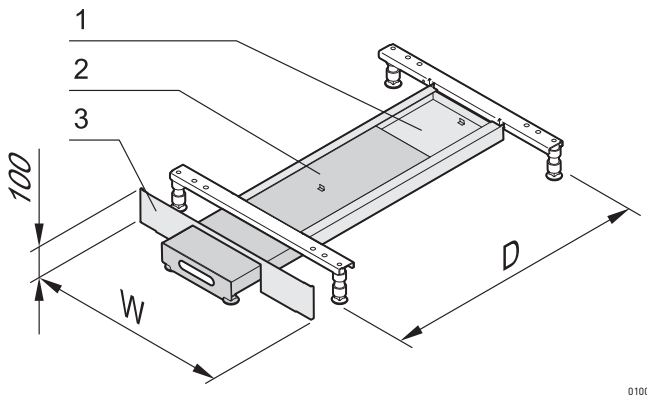

01006054

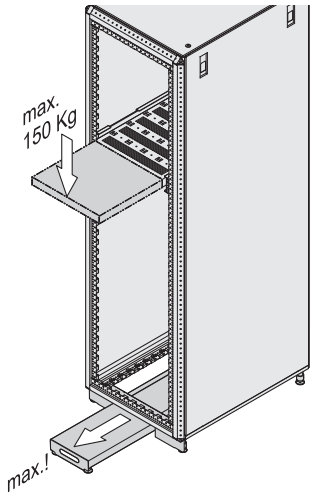

01006058

- Max. 150 kg at full extension
- Lateral and rear cable entry possible

Delivery comprises

Item	Qty	Description
1	1	Guide plate for tilt protection, St, 2 mm, AlZn
2	1	Tilt protection, St, 2 mm, RAL 7021, with 2 adjustable feet
3	1	Bezel, St, 1.5 mm, RAL 7021
4	1	Assembly kit

Order Information

For cabinet width W mm	For cabinet depth D mm	Part no.
600	900	**23130-345**
600	1000	**23130-346**
600	1200	23130-348
800	900	**23130-349**
800	1000	**23130-350**
800	1200	23130-352

Note

- Only for use in conjunction with plinth or mobile plinth

Tilt protection for floor mounting

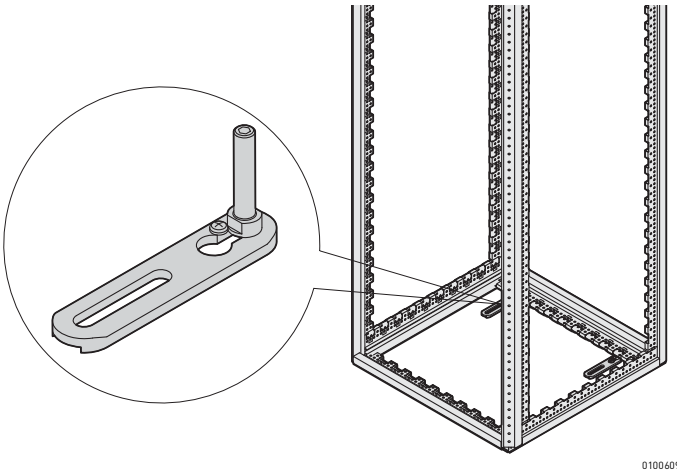

01006091

- For fixing to the floor
- Height adjustable by integrated adjustable feet
- Assembly possible on frame or base/plinth

Delivery comprises

Item	Qty	Description
1	2	Mounting plate, Al
2	2	Adjustable foot with outside thread

Order Information

Description	Part no.
Tilt protection for base mounting	**23130-386**

19" panel/slide mounts with universal pitch (EIA)

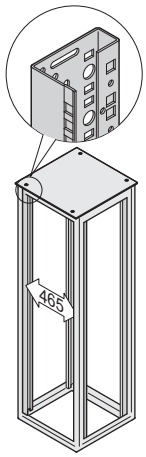

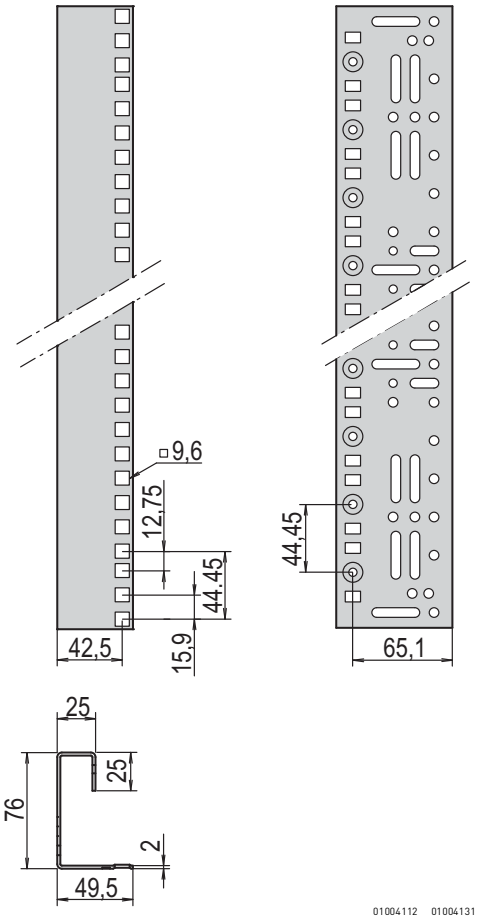

- Assembly in 600 mm wide cabinets directly on the frame
- Depth-adjustable in 25 mm increments
- In accordance with IEC 60297-1 (DIN 41 494, part 1)

Delivery comprises

Item	Qty	Description
1	2	19" panel/slide mount, St, 1.75 mm, finish AlZn, RAL 7035 or RAL 7021
2	1	Assembly kit, incl. GND/earthing

Order Information

For cabinet height mm	Usable height U	Length mm	AlZn Part no.	RAL 7035 Part no.	RAL 7021 Part no.
Partial-height mounting	8	395	**23130-037**	**23130-027**	**23130-017**
Partial-height mounting	12	545	**23130-038**	**23130-028**	**23130-018**
Partial-height mounting	16	745	**23130-039**	**23130-029**	**23130-019**
Partial-height mounting	20	895	**23130-040**	**23130-030**	**23130-020**
Partial-height mounting	24	1095	**23130-031**	**23130-021**	**23130-011**
Partial-height mounting	29	1295	**23130-032**	**23130-022**	**23130-012**
Partial-height mounting	33	1495	**23130-033**	**23130-023**	**23130-013**
Partial-height mounting	38	1695	**23130-034**	**23130-024**	**23130-014**
2000	42	1895	**23130-035**	**23130-025**	**23130-015**
2200	47	2095	**23130-036**	**23130-026**	**23130-016**

Accessories	
Adaptor bracket for reduced width for mounting of panel/slide mounts in 800 mm wide cabinets, St, 2 mm, AlZn, PU 4 pieces	**23130-091**
Heavy-load cross member Length 1,000 mm, PU 4 pieces	23130-544
Heavy-load cross member Length 1100 mm, PU 4 pieces	23130-545
Heavy-load cross member Length 1,200 mm, PU 4 pieces	**23130-546**
Dimensioning strip for 19" panel mounts, paper, white, serial numbered from 1 ... 47 U, PU 4 pieces	**25127-997**

Note

- Please order adaptor bracket for reduced width for 800 mm wide cabinets separately
- For 19" partial-height mounting, depth members are required
- Metric panel/slide mounts available on request

Cabinets – VARISTAR Datacom/Networking

Depth members

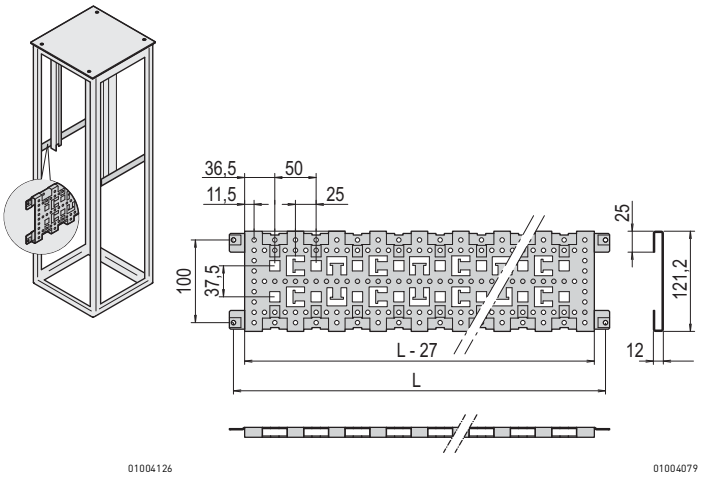

- For mounting of shortened 19" panel/slide mounts
- Cable ducting by means of cable ties and cable eyes

Delivery comprises

Item	Qty	Description
1	2	Depth member, St, 1.5 mm, finish AlZn
2	1	Assembly kit incl. GND/earthing

Order Information

For cabinet depth mm	Length L mm	Part no.
600	460	**23130-081**
800	660	**23130-082**
900	760	**23130-083**
1000	860	**23130-084**
1200	1060	**23130-365**
Cable eye A = 38 mm, B = 25 mm, PU 25 pieces		**21101-151**
Cable eye A = 47 mm, B = 50 mm, PU 25 pieces		**21101-150**

Cable eye

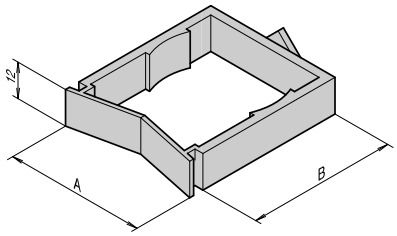

Note

- Cable ducting with cable ties see page 1.162

19" assembly kit, M6

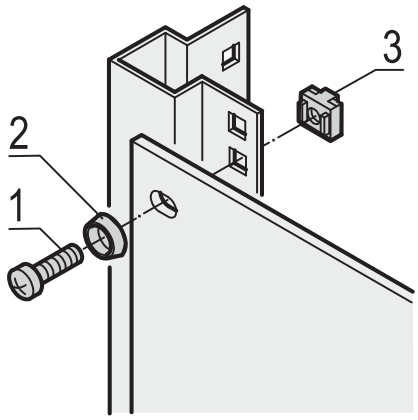

- For front panels, distribution fields and other components

Delivery comprises

Item	Description
1	Panhead screw, M6 x 16, St, zinc-plated
2	Plastic washer, black
3	Cage nut, M6, St, zinc-plated

Order Information

Description	Qty/PU	Part no.
19" assembly kit (screw, washer, nut)	50	**21101-809**
19" assembly kit (screw, washer, nut)	100	**21101-810**

Slide rails

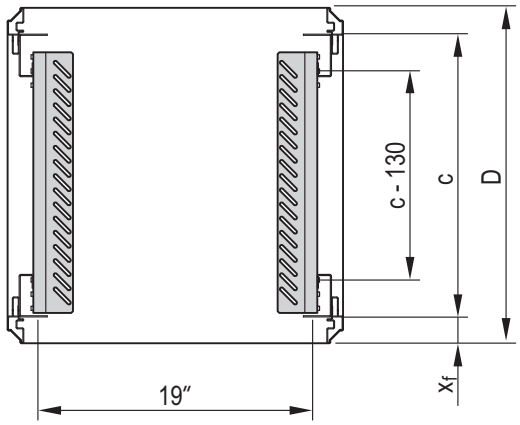

01004130

c = pitch of the 19" panel/slide mounts
x_f = standard dimension
D = cabinet depth

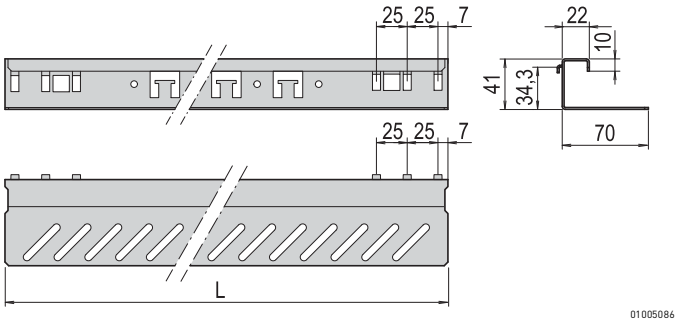

01005086

Static load-carrying capacity 25 kg

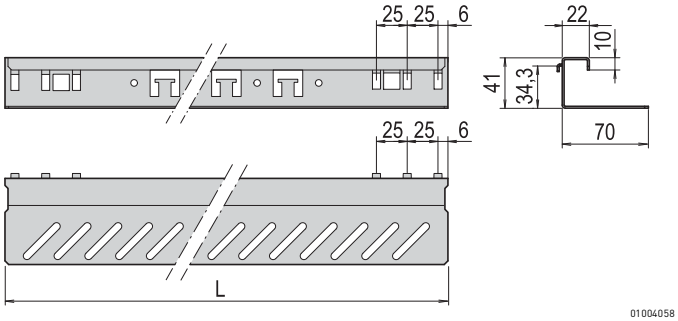

01004058

Static load-carrying capacity 100 kg

- For assembly on 19" panel/slide mounts
- Assembly in 1 U increments (snap-in, bolt-on)
- Wide support surface (48 mm)
- 2 versions
  - Static load-carrying capacity 25 kg per pair
  - Static load-carrying capacity 100 kg per pair

Delivery comprises

Item	Qty	Description
1	see Order information	Slide rail, AlZn, 1.5 mm (static load-carrying capacity 25 kg), or 2.5 mm (static load-carrying capacity 100 kg), zinc-plated
2	1	Assembly kit incl. GND/earthing

Order Information

Static load carrying capacity 25 kg

For cabinet depth mm	x_f mm	c mm	Length L mm	Qty/PU	Part no.
600, 800	50	500, 700	456	2	**23130-096**
600, 800	50	500, 700	456	10	**23130-101**
800	150	500	456	2	**23130-096**
800	150	500	456	10	**23130-101**
900, 1000, 1200	70	740	699	2	**23130-098**
900, 1000, 1200	70	740	699	10	**23130-103**

Order Information

Static load carrying capacity 100 kg

For cabinet depth mm	x_f mm	c mm	Length L mm	Qty/PU	Part no.
600, 800	50	500, 700	458	2	**23130-118**
600, 800	50	500, 700	458	10	**23130-123**
800	150	500	458	2	**23130-118**
800	150	500	458	10	**23130-123**
900, 1000, 1200	70	740	699	2	**23130-120**
900, 1000, 1200	70	740	699	10	**23130-125**

Short slide rails

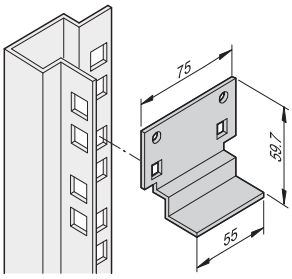

sc96xxxx

- Support for heavy 19" chassis
- To attach on 19" slide mounts
- Static load-carrying capacity max. 15 kg per pair

Delivery comprises

Item	Qty	Description
1	2 / 10	Short slide rail, St, 1.5 mm, finish AlZn
2	1	Assembly kit

Order Information

Description	Qty/PU	Part no.
Short slide rail	2	**23130-094**
Short slide rail	10	**23130-095**

Cabinets – VARISTAR Datacom/Networking

19'' fixed shelf, 75 kg

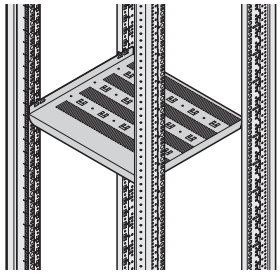

01004066

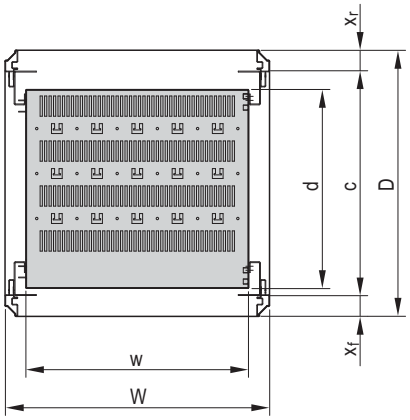

01004067

c = max. pitch of the 19" slide mounts
x_f, x_r = standard assembly dimension

- Static load-carrying capacity 75 kg (150 kg with strengthening rail)
- Mounting height 1 U, for mounting on four panel/slide mounts
- With hammer head perforation to fix cable ties

Delivery comprises

Item	Qty	Description
1	1	Perforated shelf, St, 1.5 mm (colour see Order Information)
2	1	Assembly kit incl. GND/earthing

Order Information

For cabinet depth	Usable surface w x d	x_f	c	RAL 7035	RAL 7021
mm	mm	mm	mm	Part no.	Part no.
600	495 x 442	50	500	**22130-303**	**21130-303**
800	495 x 442	150	500	**22130-303**	**21130-303**
900	495 x 682	70	740	**22130-309**	**21130-309**
1000	495 x 682	70	740	**22130-309**	**21130-309**
1200	495 x 682	70	740	**22130-309**	**21130-309**
Strengthening rail for stationary 19" shelf PU 1 piece					**23130-310**

Note

- Cable ducting with cable ties see page 1.162
- Other sizes see ServicePLUS page 1.165

19" shelf, stationary, depth-adjustable, 1 U

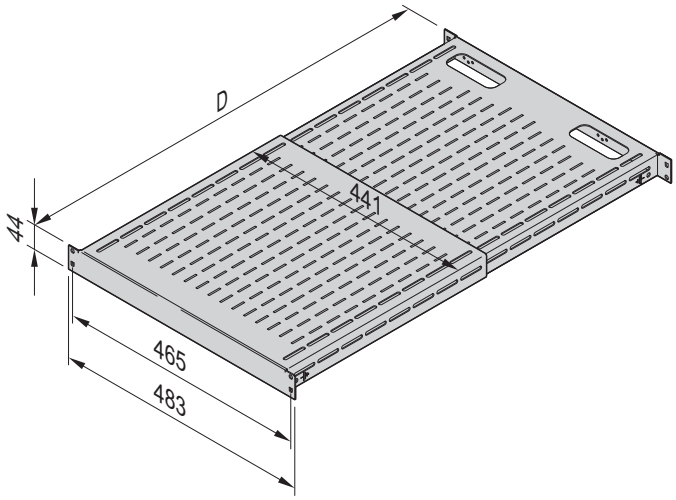

87928708

- Static load-carrying capacity 68 kg
- Mounting height 1 U
- For mounting on four 19" uprights or four panel/slide mounts
- Variable mounting dimensions (depth-adjustable)
- 2 Versions
  - Mounting dimension 495 ... 851 mm
  - Mounting dimension 792 ... 1151 mm
- 2 oval cut-outs for cable ducting
- Colour black, RAL 9005

Delivery comprises

Item	Qty	Description
1	1	Shelf, depth-adjustable, width 19", height 1 U, RAL 9005 (black)
2	1	Fitting materials with user manual

Order Information

19" shelf, stationary, depth-adjustable, 1 U	Part no.
Mounting dimension D 495 ... 851 mm	**D19FVT69B**
Mounting dimension D 792 ... 1151 mm	**D19FVT912B**

Note

- 19" assembly kit see page 1.143

19'' telescopic shelf, 30 kg

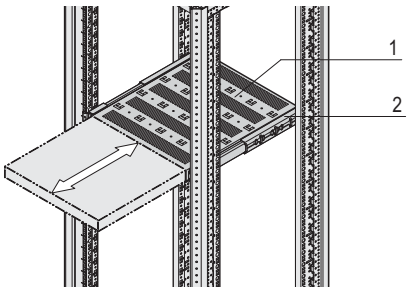

01004068

- Static load-carrying capacity at full extension 30 kg
- Mounting height 1 U, for mounting on four 19" panel/slide mounts
- Incl. telescopic slides
- Hammer head perforation to fix cable ties
- 2 versions
  - Full depth
  - Depth shortened by 100 mm for rear cable ducting

Delivery comprises

Item	Qty	Description
1	1	Perforated shelf, St, 1.5 mm (colour see Order Information)
2	2	Telescopic slide
3	1	Assembly kit

Order Information

Full depth

For cabinet depth	Usable surface w x d	x_f	c	RAL 7035	RAL 7021
mm	mm	mm	mm	Part no.	Part no.
600	417 x 482	50	500	**22130-343**	**21130-343**
800	417 x 482	150	500	**22130-343**	**21130-343**
GND/earthing for telescopic 19" shelf PU 1 kit, for Varistar					**23130-140**

Note

- Cable ducting with cable ties see page 1.162

Full depth

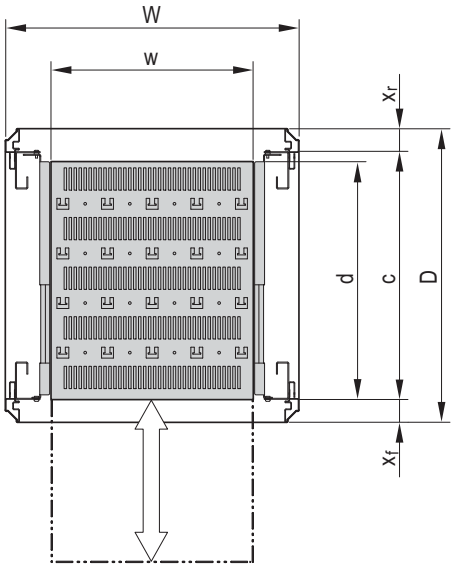

01004069

Shortened depth

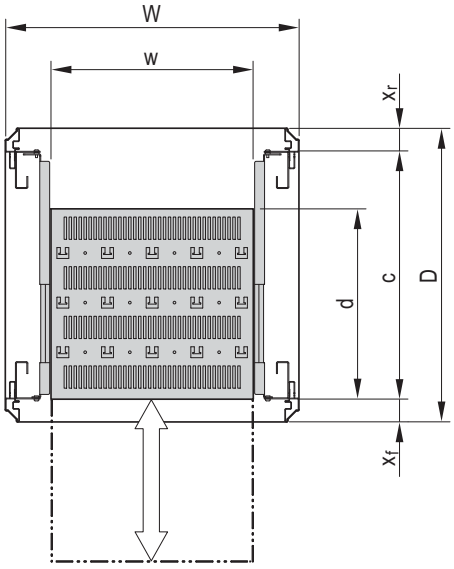

01004070

c = max. pitch of the 19" panel/slide mounts
x_f, x_r = standard assembly dimension

Order Information

Shortened by 100 mm

For cabinet depth	Usable surface w x d	x_f	c	RAL 7035	RAL 7021
mm	mm	mm	mm	Part no.	Part no.
600	417 x 382	50	500	**22130-342**	**21130-342**
800	417 x 382	150	500	**22130-342**	**21130-342**
GND/earthing for telescopic 19" shelf PU 1 kit, for Varistar					**23130-140**

Note

- Cable ducting with cable ties, see page 1.162

Cabinets – VARISTAR Datacom/Networking

19" telescopic shelf, 70 kg

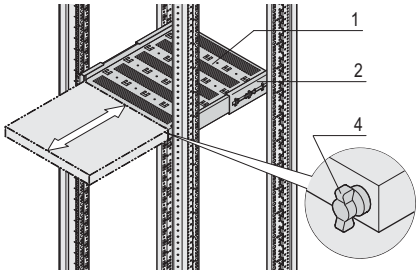

01004071

- Static load-carrying capacity at full extension 70 kg
- Mounting height 2 U, for mounting on four 19" panel/slide mounts
- Incl. telescopic slides
- Locking with T-bar lock possible
- Hammer head perforation to fix cable ties
- 2 versions
  - Full depth
  - Depth shortened by 100 mm for rear cable ducting

Full depth

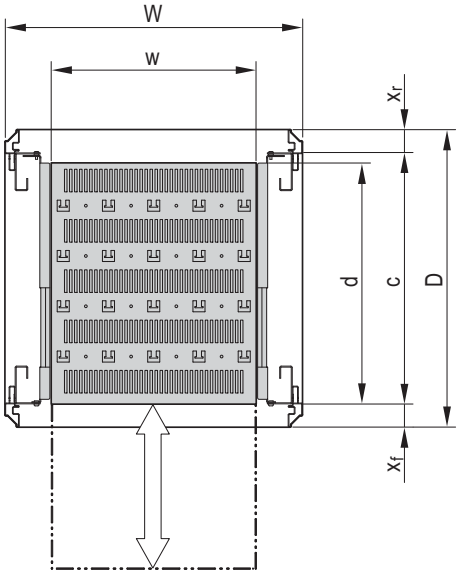

01004069

Shortened depth

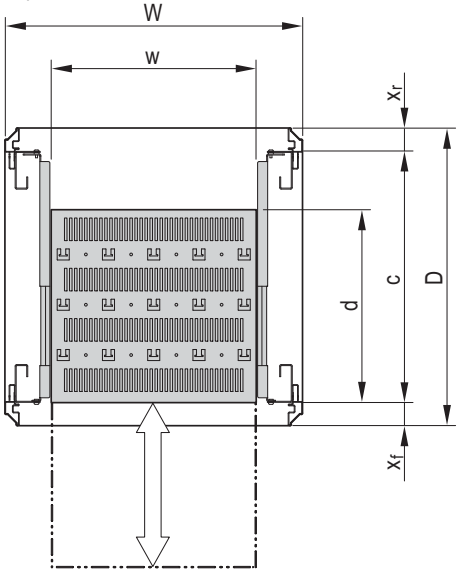

01004070

c = max. pitch of the 19" slide mounts
x_f, x_r = standard assembly dimension

Delivery comprises

Item	Qty	Description
1	1	Perforated shelf, St, 1.5 mm (colour see Order Information)
2	2	Telescopic slide
3	1	Assembly kit

Order Information

Full depth

For cabinet depth	Usable surface w x d	x_f	c	RAL 7035	RAL 7021
mm	mm	mm	mm	Part no.	Part no.
600	405 x 482	50	500	**22130-353**	**21130-353**
800	405 x 482	150	500	**22130-353**	**21130-353**
Item 4 T-bar lock for 1 telescopic shelf (can be mounted right or left), 1 piece					**23130-092**
GND/earthing for telescopic 19" shelf PU 1 kit, for Varistar					**23130-140**

Note

- Please order T-bar lock (item 4) separately
- Cable ducting with cable ties see page 1.162

Order Information

Shortened by 100 mm

For cabinet depth	Usable surface w x d	x_f	c	RAL 7035	RAL 7021
mm	mm	mm	mm	Part no.	Part no.
600	405 x 382	50	500	**22130-352**	**21130-352**
800	405 x 382	150	500	**22130-352**	**21130-352**
Item 4 T-bar lock for 1 telescopic shelf (can be mounted right or left), 1 piece					**23130-092**
GND/earthing for telescopic 19" shelf PU 1 kit, for Varistar					**23130-140**

Note

- Please order T-bar lock (item 4) separately
- Cable ducting with cable ties see page 1.162

Lever handle for single point locking

01005016

- For installation instead of key lock insert
- To open press push-button
- DIN profile half cylinder retrofittable

Delivery comprises

Item	Qty	Description
1	1	Lever handle for single point locking
2	1	Assembly kit

Order Information

Description	Part no.
Lever handle for single point locking	23130-067
DIN profile half cylinder, common locking for lever handle (1 key fits all locks) incl. 2 keys	25127-995

Note

- Other locks such as ASSA, KABA or RONIS available on request

Electronic closing (stand-alone)

41003035

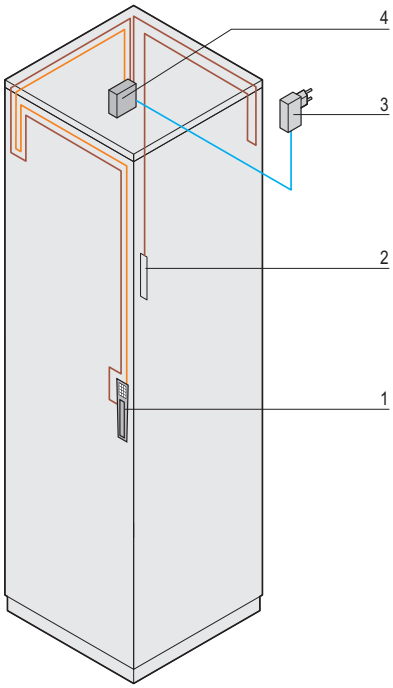

01007054

- Complete package comprising a handle with keyboard (master) and a handle with opening function (slave) plus all necessary electrical connection components
- Suitable for all Varistar cabinet doors with single point or 3-point locking and S2100 door handle cut-out
- Front and rear door can be opened together or separately by means of coding

Delivery comprises (Kit)

Item	Qty	Description
1	1	Electronic lever handle with keyboard (master) for front door, 4 m connecting cable and ferrules
2	1	Electronic lever handle, opener (slave) only, for rear door, 4 m connecting cable and ferrules
3	1	Plug-in power supply AC/DC with Euro plug, input voltage 100 V_{AC} ... 230 V_{AC}, output voltage 12 V_{DC} /700 mA
4	1	Central unit with case
5	1	Cable ducting
6	1	Assembly kit, operating instructions

Order Information

Description	Part no.
Electronic closing	20130-598

Electronic locking (MLR 3000)

01013014

- Electronic door handles for Varistar cabinets
- Modular solution with electronic door locking, reader unit, PSU and administration software
- Integrated visualization, LED display for alarm signals and operating statuses
- Two locking options: standalone and networked
- Access reporting and user management
- Sabotage and vandalism alarm

Delivery includes

Item	Qty	Description
1a	1	Electronic door lock MLR 3000 with lever handle and card reader unit; display with status LEDs; reader (125 kHz-HDI, 13,56 MH5-MIFARE)
1b	1	Card reader unit (supply voltage 12 V_{DC}, 40 mA, (max. 440 mA); Temperature range -20 ... +70 °C
1c	1	Junction (distribution box)

Order Information

Description	Qty/PU piece	Part no.
Electronic locking (MRL3000), 125 KHz-HDI	1	23130-513
Electronic locking (MRL3000), 13.56 MHz-MIFARE	1	23130-565
Accessories		
Electronic door lock MLR1000 (slave), 1 piece		23130-512
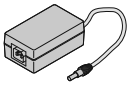 **PSU for electronic locking** 1 piece		23130-515
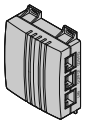 **Gateway for electronic door lock** 1 piece		23130-523
Administration Suite Software 1 piece		60130-680
Reader cards for electronic locking, 125 KHz-HDI PU 10 pieces		23130-526
Reader cards for electronic locking, 13.56 MHz-MILFARE PU 10 pieces		23130-566
Standalone function cards, 125 KHz-HDI PU 4 pieces		60130-678
Standalone function cards, 13.56 MHz- MIFAREPU 4 pieces		60130-832
Battery pack for electronic locking 1 piece		60130-729
Desktop reader, 125 KHz-HDI 1 piece		60130-730
Desktop Reader, 13.56 MHz-MIFARE 1 piece		60130-830

Two locking options: standalone and networked

Standalone solution:
- Lever handle with HID 125 kHz reader unit (Mifare on request)
- Reader cards are set up and issued directly on handle using the HID standalone function cards

Networked solution:
- Access is managed centrally via the network
- Reader cards are issued via the management software
- The Gateway allows up to 32 door handles to be controlled

Standalone solution

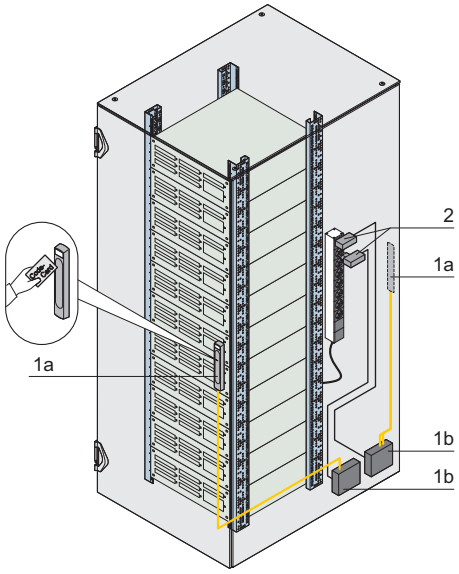

01014051

Required number of components for one cabinet with front and rear door (standalone solution)

Item	Description	Required number Piece	Order no.
1a 1b	Electronic door lock MLR3000 Stand-alone card reader unit	2	23130-513
2	Power supply unit for door lock	2	23130-515
	Cards (set of 10)	1	23130-512
	HID stand-alone function cards	1	60130-678
	Battery pack (optional)	1	60130-729

Networked solution

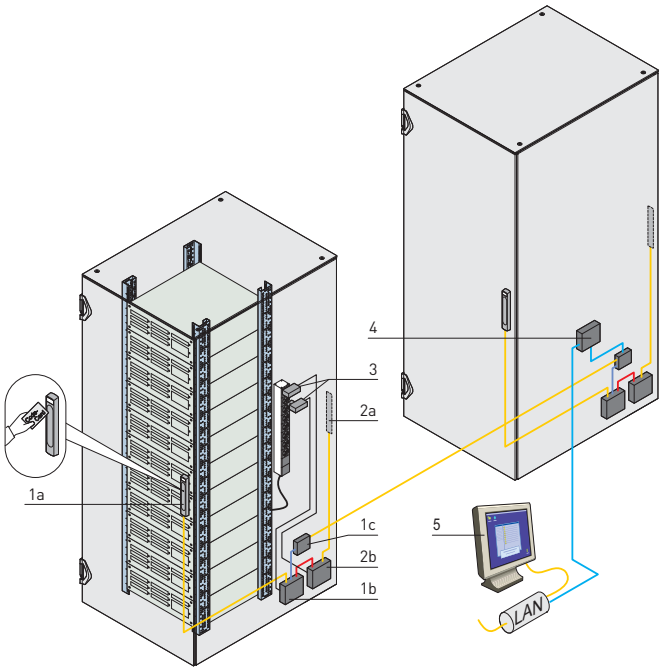

01014052

Required number of components for two cabinets with front and rear door (networked solution)

Item	Description	Required number Piece	Order no.
1a 1b 1c	Electronic door lock MLR3000 Card reader unit Junction	2	23130-513
2a 2b	Electronic door lock MLR1000 Junction	2	23130-512
3	PSU for door lock/gateway	5	23130-515
4	Gateway for electronic door lock	1	23130-523
5	Access management software, administration suite via network	1	60130-680
	Cards (set of 10)	1	23130-526
	Desktop reader (optional)	1	23130-730
	Battery pack (optional)	1	60130-729

Cabinets – VARISTAR Datacom/Networking

Electronic door lock MLR1000

01013014

- Electronic door handles for Varistar cabinets
- Integrated visualization, LED display for alarm signals and operating statuses
- Lever handle opens when switch contacts touch

Delivery includes

Item	Qty	Description
1a	1	Electronic door lock MLR1000 with lever handle, display with multicolor status LED
1b	1	Junction (distribution box), power supply via 12 V_{DC} socket, 40 mA (max. 440 mA); temperature range -20 ... +70 °C

Order Information

Description	Qty/PU piece	Part no.
Electronic door lock MLR1000	1	23130-512
Accessories		
PSU for electronic locking 1 piece		23130-515

Battery pack for electronic locking

01014001

- Battery pack allowing emergency opening of lever handle (MLR 3000) in event of power failure
- Power is supplied to the handle from below, allowing door then to be opened using an authorized access card

Delivery includes

Item	Qty	Description
1	1	Battery pack, 12 V, width 145 mm, height 72 mm, depth 34 mm

Order Information

Description	Qty/PU piece	Part no.
Battery pack for electronic locking	1	60130-729

PSU for electronic locking

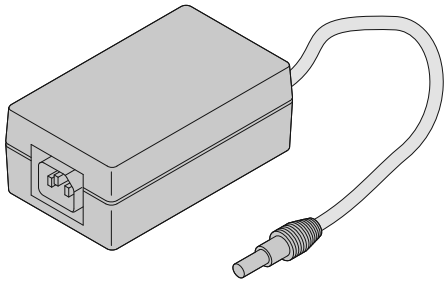

01014054

- Power adapter to supply lever handle (MLR 3000, MLR1000) and gateway

Delivery includes

Item	Qty	Description
1	1	Power adapter, 230 V_{AC} (IEC 60320-C13 plug), 12 V_{DC}, (cable length 1230 mm)

Order Information

Description	Qty/PU piece	Part no.
PSU for electronic locking	1	23130-515
Accessories		
Mains cable, IEC IEC 60320 C14 plug, IEC 60320 C13 socket, 2.5 m, 1 piece		**60197-053**
Mains cable, BS British Standard plug, IEC 60320 C13 socket, 2.5 m, 1 piece		**60103-137**
Mains cable, SCHUKO/UTE SCHUKO/UTE plug, IEC 60320 socket, 2.5 m, 1 piece		**62150-191**

Reader cards for electronic locking

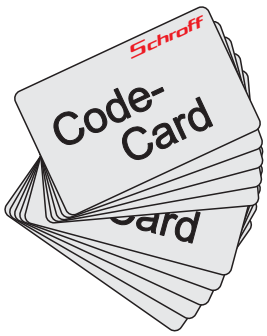

12514051

- Reader cards for electronic locking (MLR3000)

Delivery includes

Item	Qty	Description
1	10	Reader card for reader unit

Order Information

Description	Qty/PU	Part no.
Reader cards for electronic locking, 125 KHz-HDI	PU 10 pieces	23130-526
Reader cards for electronic locking, 13.56 MHz-MILFARE	PU 10 pieces	23130-566

Standalone function cards

12514050

- Code cards for programming standalone locking

Delivery includes

Item	Qty	Description
1	1	Card (unlocking card)
2	1	Card (locking card)
3	1	Card (group card)
4	1	Card (general card)
5	1	User manual

Order Information

Description	Qty/PU	Part no.
Standalone function cards, 125 KHz-HDI	PU 4 pieces	60130-678
Standalone function cards, 13.56 MHz-MIFARE	PU 4 pieces	60130-832

Cabinets – VARISTAR Datacom/Networking

Access management software, Administration Suite

01014004

- The Administration Suite enables you to document and protect all access to indoor cabinets and enclosures. You have complete control and also have a high level of flexibility
- Alarm management, the possibility of managing systems in different time zones and managing different installations.
- Flexibility, a clear overview and user-friendly design make this software easy to use and an effective management system for data and server cabinets protected with E-LINE by DIRAK
- The integrated web client lets you link any number of users with the administration suite via a web browser. Any device with a browser function (iPad®, tablet computers, iPhone®, Blackberry® etc.) can operate the web client of the administration suite without additional software installation

Delivery includes

Item	Qty	Description
1	1	CD with software and documentation

Order Information

Description	Qty/PU piece	Part no.
Administration Suite Software	1	60130-680

Desktop reader

01014002

- Card reader unit for networked solution
- Centralized allocation of reader cards using administration suite software

Delivery includes

Item	Qty	Description
1	1	Desktop reader, width 107.5 mm, depth 108.5 mm, height 23.75 mm
2	1	USB connecting cable, length 1800 mm

Order Information

Description	Qty/PU piece	Part no.
Desktop reader, 125 KHz-HDI	1	60130-730
Desktop reader, 13.56 MHz-MIFARE	1	60130-830

Gateway for electronic locking

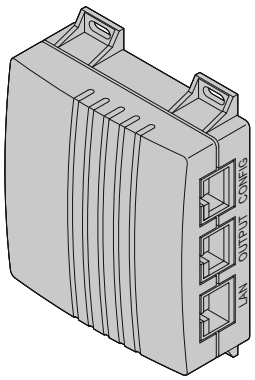

01014053

- Connects to Ethernet network

Delivery includes

Item	Qty	Description
1	1	Gateway, width 75 mm, depth 70 mm, height 29 mm

Order Information

Description	Qty/PU piece	Part no.
Gateway for electronic door lock	1	23130-523
Accessories		
PSU for electronic locking 1 piece		23130-515

Cabinets – VARISTAR Datacom/Networking

Zone 1 cable management

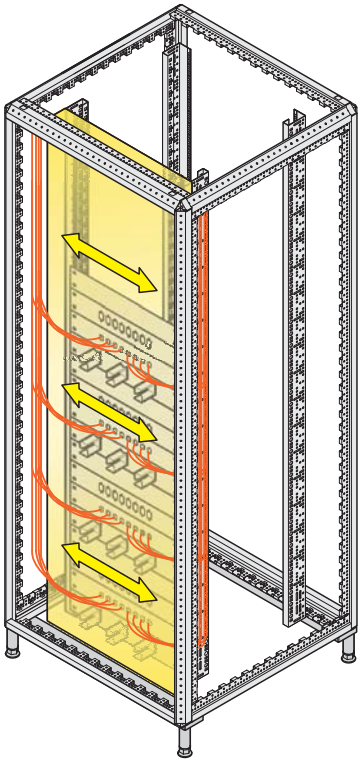

01006087

- Cable ducting zone 1 is located in the front area of the cabinet, in front of the 19" plane
- In this zone the patch cables are ducted horizontally between the distribution fields

Products

- Cable ducting see chapter Cabinet accessories, from page 3.5
- 19'' distribution field, Cat 5/6, see chapter Cabinet accessories, page 3.14

Zone 2 cable management

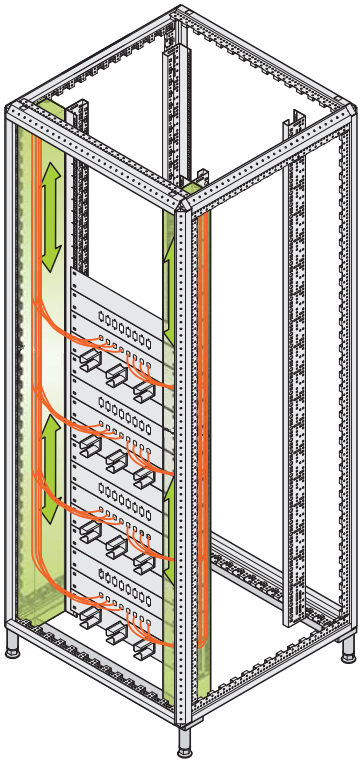

01006088

- The cable ducting zone 2 is located on the right and left hand side in the front area of the cabinet, next to the 19" plane
- The patch cables are ducted in a kind of channel to the individual distribution fields and components

Products

- Cable eyes see from page 1.156
- Cable brackets for fibre optic cables, see page 1.157
- Shielding panel, see page 1.157

Cable eye, plastic

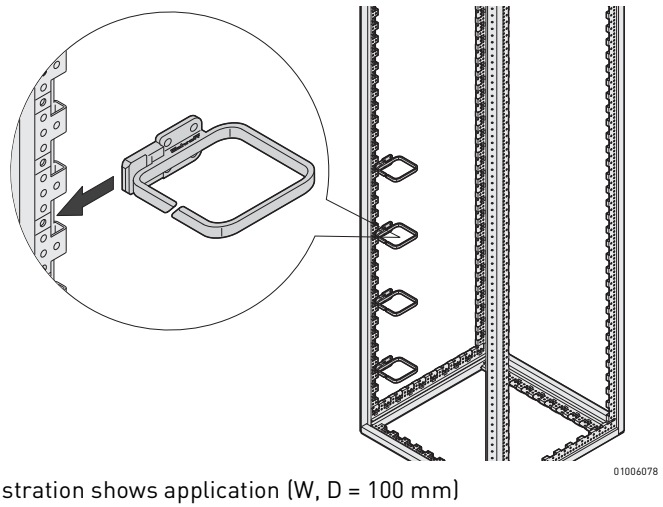

Illustration shows application (W, D = 100 mm)

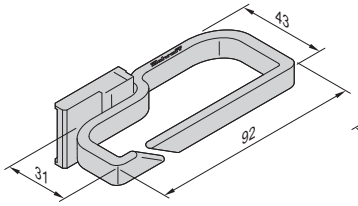

W = 31 mm, D = 92 mm

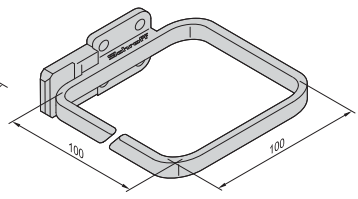

W, D = 100 mm

- For assembly on cabinet uprights in 800 mm wide cabinets
- Simple and fast assembly by clicking into the cabinet profile (without assembly kit)
- Cable ducting laterally in front of the 19" panel/slide mounts
- With additional assembly kit also suitable for lateral assembly on the 19" panel/slide mounts

Delivery comprises

Item	Qty	Description
1	4	Cable eye, PA, UL 94 V-0, black

Order Information

For cabinet width mm	W mm	D mm	Part no.
600	31	92	**23130-506**
800	100	100	**23130-336**
Accessories			
Taptite screw M6 Taptite, PU 50 pieces			**23130-285**

Cable eye, steel

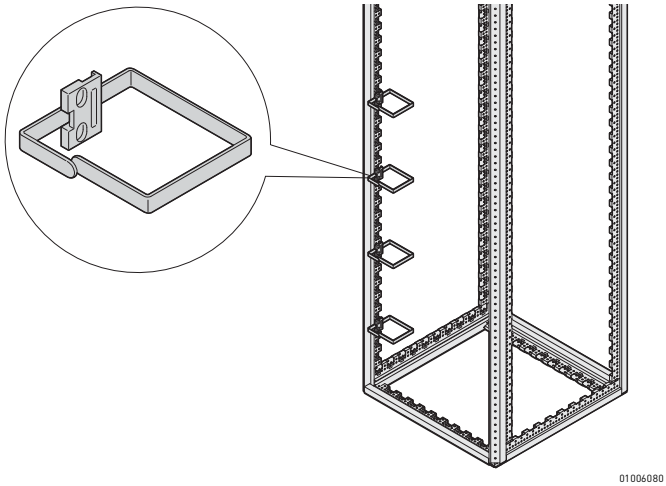

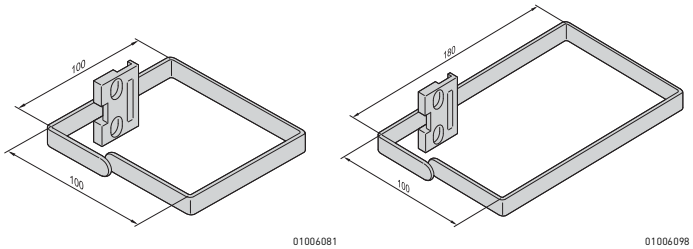

- For assembly on cabinet uprights (800 mm cabinet width) or laterally to the 19" panel/slide mounts
- Cable ducting laterally next to and/or in front of the 19" panel/slide mounts

Delivery comprises

Item	Qty	Description
1	4	Bracket, St, zinc-plated,
2	4	Terminal, Al, die-cast
3	1	Assembly kit

Order Information

For cabinet width mm	W mm	D mm	Part no.
800	100	100	**23130-341**
800	100	180	**23130-342**

Cabinets – VARISTAR Datacom/Networking

Fibre optic cable ducting

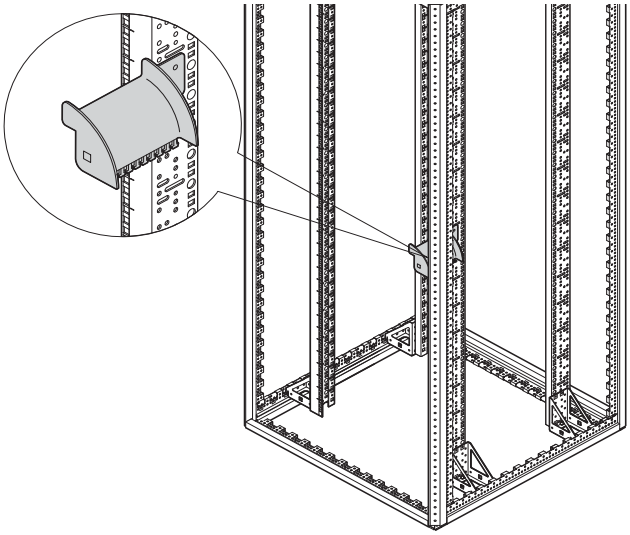

01006074

- Assembly on 19" panel/slide mounts
- For secure laying of optical fibre cables

Delivery comprises

Item	Qty	Description
1	2	Fibre optic cable ducting, PA, UL 94 V-0, black
2	1	Assembly kit

Order Information

Description	Part no.
Fibre optic cable ducting	**23130-372**

Cover panel, hinged

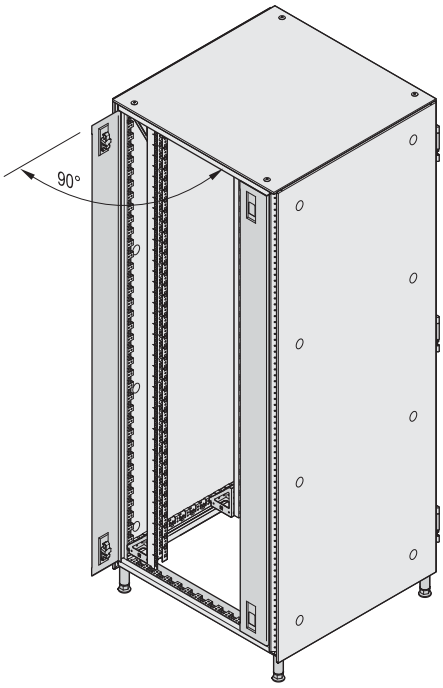

01006056

- For use in 2000 mm high and 800 mm wide cabinets
- For lateral covering of e.g. the patch cables
- Optionally with brush strip

Delivery comprises

Item	Qty	Description
1	2	Cover panel, St, 1 mm, RAL 7021
2	1	Assembly kit

Order Information

Height mm	Width mm	Qty/PU piece	Part no.
2000	100	2	**23130-343**
Brush strip for cover panel height 2000 mm, PU 2 pieces			23130-379

Zone 3 cable management

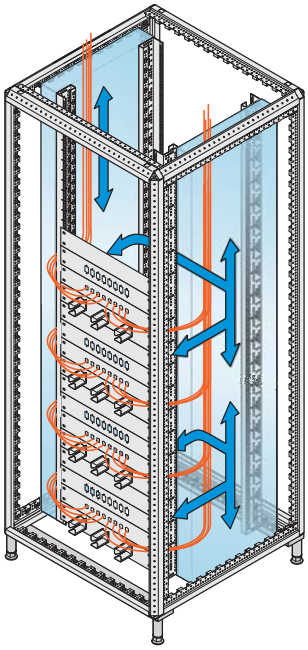

01006085

- Is located laterally behind zone 2 across the whole cabinet depth
- Fibre optic or copper cables are ducted from cable entry in lateral area of top cover or base plate to rear of distribution fields

Products

- C-rail or cable support rail for the cabinet depth see from page 1.159
- Or cable ladder from page 1.160

Cable support rail for cabinet depth

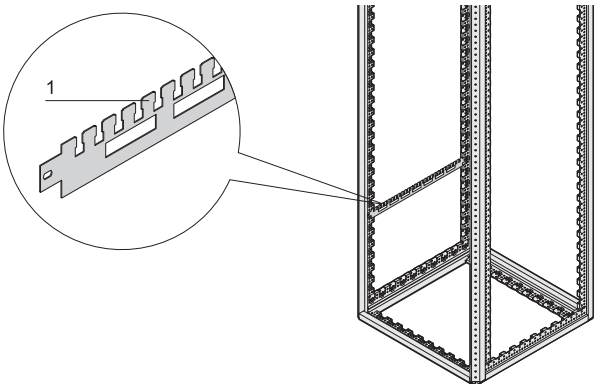

01006066

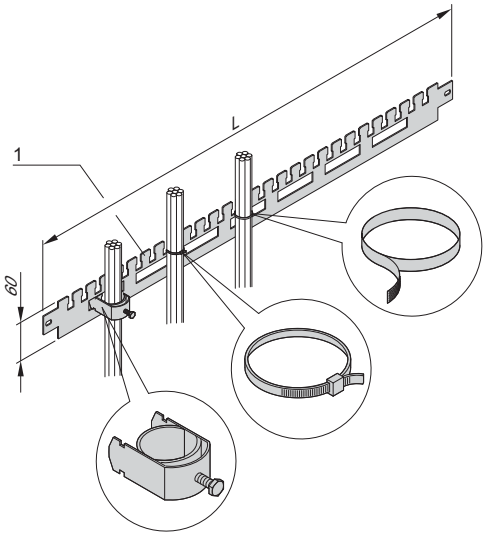

01006067

- For cable ducting in lateral area of cabinet
- For cable shells (bottom row) and for cable ties, resp. Velcro (top row)

Delivery comprises

Item	Qty	Description
1	2	Cable support rail, St, 1.5 mm, RAL 7021
2	1	Assembly kit

Order Information

For cabinet depth mm	Length L mm	Part no.
600	466.4	**23130-326**
800	666.4	**23130-328**
900	766.6	**23130-329**
1000	866.4	**23130-330**
1200	1066.4	**23130-332**
Accessories		
Cable shell	for cable bundle 18 ... 22 mm, PU 10 pieces	**20118-775**
Cable shell	for cable bundle 22 ... 26 mm, PU 10 pieces	**20118-776**
Cable shell	for cable bundle 26 ... 30 mm, PU 10 pieces	**20118-777**
Cable shell	for cable bundle 30 ... 34 mm, PU 10 pieces	**20114-728**
Cable shell	for cable bundle 34 ... 38 mm, PU 10 pieces	**20114-729**
Cable shell	for cable bundle 38 ... 42 mm, PU 10 pieces	**20114-730**
Cable shell	for cable bundle 42 ... 46 mm, PU 10 pieces	**20114-731**
Cable shell	for cable bundle 46 ... 50 mm, PU 10 pieces	20118-778

Note

- Cable ties and Velcro see page 1.162

C-rail for the cabinet depth

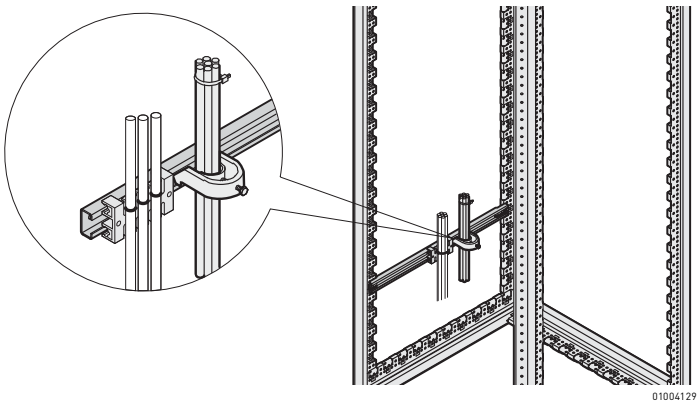

01004129

Cable retention rail and cable shell mounted on C-profile

Slide nut

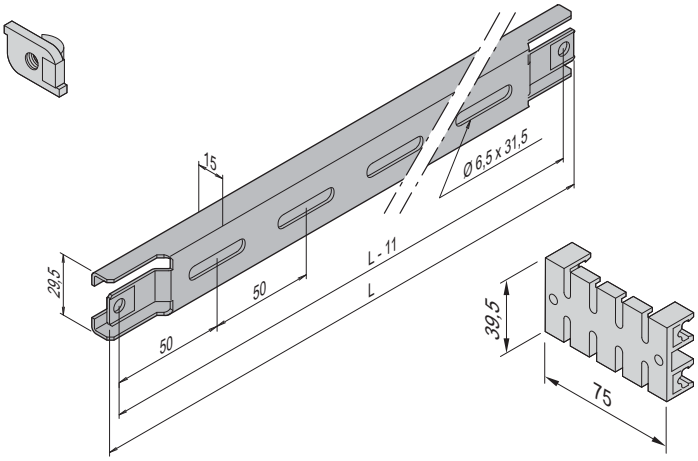

01504054 01004132 01006071

C-rail Cable retention rail

- For cable ducting in lateral area of cabinet
- For cable shells and cable retention rails

Delivery comprises

Item	Qty	Description
1	2	C-rail, St, 1.5 mm, AlZn
2	1	Assembly kit incl. GND/earthing

Order Information

For cabinet depth mm	Length L mm	Part no.
600	460	**23130-086**
800	660	**23130-087**
900	760	**23130-088**
1000	860	**23130-089**
1200	1060	**23130-367**
Accessories		
Cable retention rail for C-rail Width 75 mm, length 39.5 mm, PU 5 piece		**60118-472**
Cable shell for cable bundle 18 ... 22 mm, PU 10 pieces		**20118-775**
Cable shell for cable bundle 22 ... 26 mm, PU 10 pieces		**20118-776**
Cable shell for cable bundle 26 ... 30 mm, PU 10 pieces		**20118-777**
Cable shell for cable bundle 30 ... 34 mm, PU 10 pieces		**20114-728**
Cable shell for cable bundle 34 ... 38 mm, PU 10 pieces		**20114-729**
Cable shell for cable bundle 38 ... 42 mm, PU 10 pieces		**20114-730**
Cable shell for cable bundle 42 ... 46 mm, PU 10 pieces		**20114-731**
Cable shell for cable bundle 46 ... 50 mm, PU 10 pieces		20118-778
Slide nut for C-profile, PU 10 pieces		**21120-140**

- Cable ties and Velcro for cable retention rail see page 1.162

Cable panel

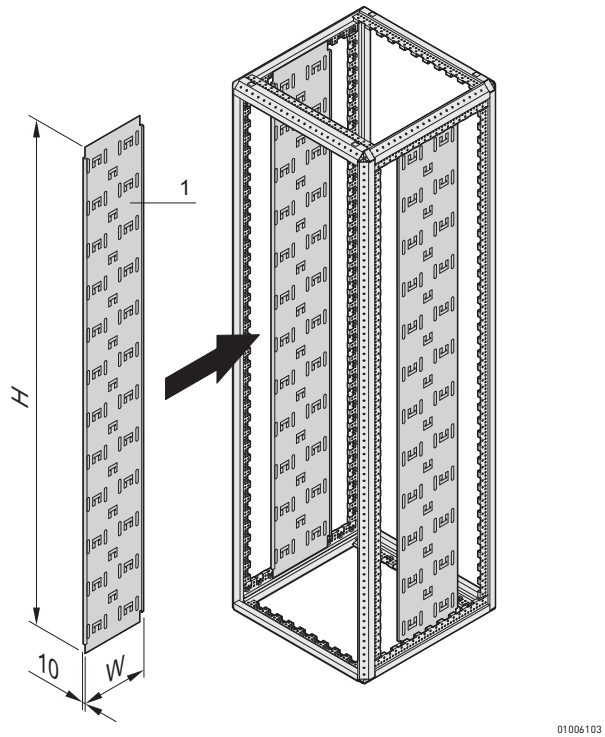

01006103

- For fitting directly onto the frame
- Fixing of cables with cable ties or Velcro
- Widths 150 mm and 250 mm

Delivery comprises

Item	Qty	Description
1	2	Cable panel with cut-outs, St, 1 mm, RAL 7021
2	1	Assembly kit

Order Information

For cabinet height U	H mm	W mm	Part no.
8	446	110	23130-501
9	496	110	23130-504
12	604	110	23130-500
14	670	110	23130-503
18	917	110	23130-499
20	1019	110	23130-502
38	1700	150	**23130-420**
42	1900	150	**23130-421**
47	2100	150	**23130-422**
38	1700	250	**23130-149**
42	1900	250	**23130-150**
47	2100	250	**23130-151**

Note

- Cable ties and Velcro see page 1.162

Cable ladder

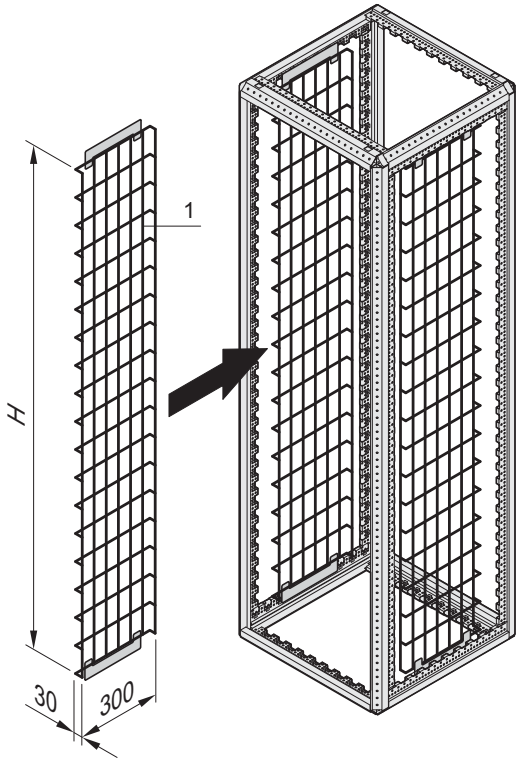

01014057

- For mounting in 2000 or 2200 mm high cabinets
- Cables are fixed in place with cable ties or Velcro

NEW

Delivery includes

Item	Qty	Description
1	2	Cable ladder, round steel, zinc-plated
2	1	Assembly kit

Order Information

For cabinet height mm	Height H mm	Width mm	Depth mm	Part no.
2000	1800	300	30	23130-554
2200	2000	300	30	23130-555

Note

- Cable ties and Velcro see page 1.162

Cabinets – VARISTAR Datacom/Networking

Zone 4 cable management

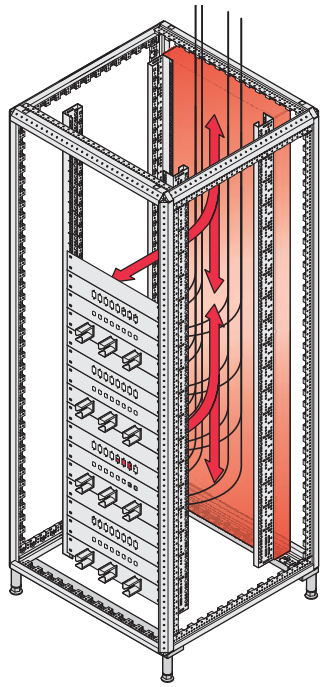

01006086

- Cable ducting on the inside of the cabinet rear panel across the entire cabinet width
- Top cover openings can be used for cable ducting

Products

- C-rail and cable support rail for the cabinet width see from page 1.161

Cable support rail for cabinet width

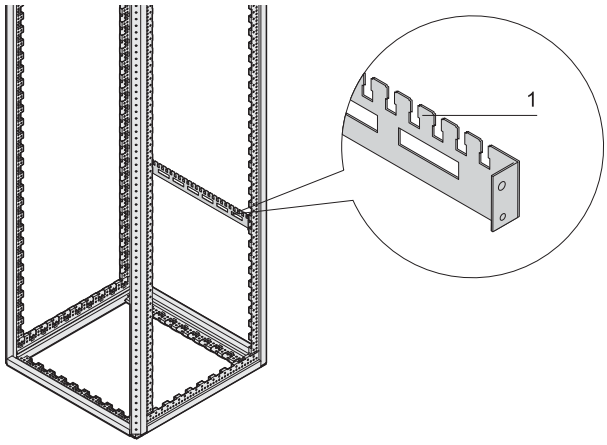

01006077

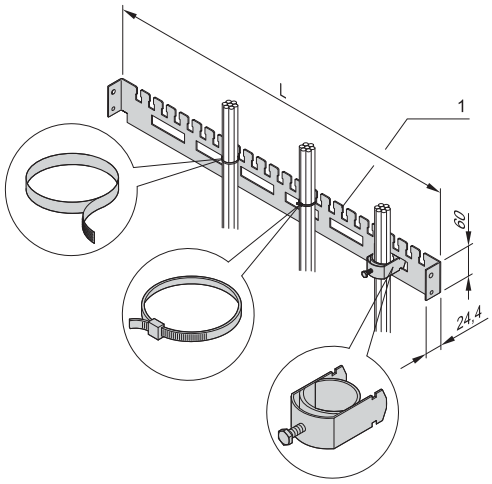

01006076

- For cable ducting in rear area of cabinet
- For cable shells (bottom row) and for cable ties, resp. Velcro (top row)

Delivery comprises

Item	Qty	Description
1	2	Cable support rail, St, 1.5 mm, RAL 7021
2	1	Assembly kit

Order Information

For cabinet width mm	Length L mm	Part no.
600	550	**21236-093**
800	750	**23130-312**
Accessories		
Cable shell	for cable bundle 18 ... 22 mm, PU 10 pieces	**20118-775**
Cable shell	for cable bundle 22 ... 26 mm, PU 10 pieces	**20118-776**
Cable shell	for cable bundle 26 ... 30 mm, PU 10 pieces	**20118-777**
Cable shell	for cable bundle 30 ... 34 mm, PU 10 pieces	**20114-728**
Cable shell	for cable bundle 34 ... 38 mm, PU 10 pieces	**20114-729**
Cable shell	for cable bundle 38 ... 42 mm, PU 10 pieces	**20114-730**
Cable shell	for cable bundle 42 ... 46 mm, PU 10 pieces	**20114-731**
Cable shell	for cable bundle 46 ... 50 mm, PU 10 pieces	20118-778

Note

- Cable ties and Velcro see page 1.162

C-rail for cabinet width

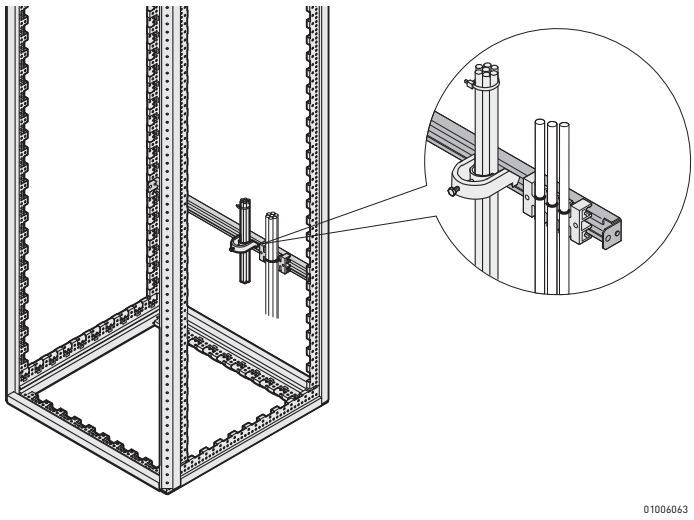

C-rail

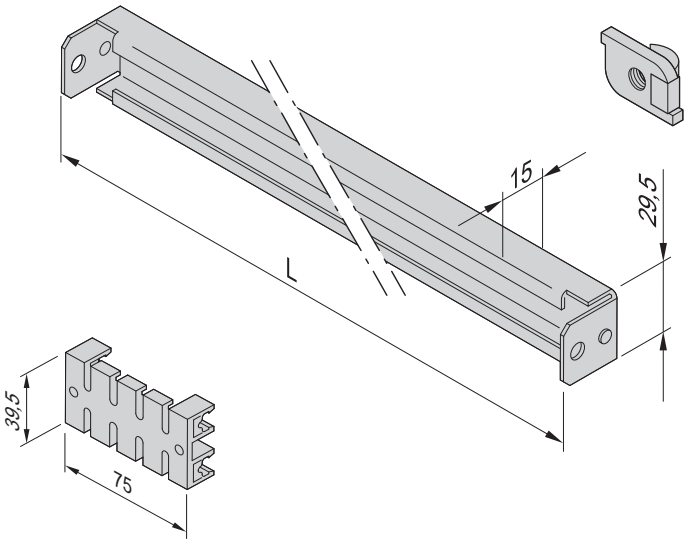

Slide nut

Cable retention rail

- For cable ducting in rear or front area of cabinet
- For cable shells and cable retention rails

Delivery comprises

Item	Qty	Description
1	2	C-rail, St, 1.5 mm, finish AlZn
2	1	Assembly kit incl. GND/earthing

Order Information

For cabinet width mm	Length mm	Part no.
600	550	**23130-333**
800	750	**23130-334**
Accessories		
Cable retention rail for C-rail Width 75 mm, length 39.5 mm, PU 5 piece		**60118-472**
Cable shell for cable bundle 18 ... 22 mm, PU 10 pieces		**20118-775**
Cable shell for cable bundle 22 ... 26 mm, PU 10 pieces		**20118-776**
Cable shell for cable bundle 26 ... 30 mm, PU 10 pieces		**20118-777**
Cable shell for cable bundle 30 ... 34 mm, PU 10 pieces		**20114-728**
Cable shell for cable bundle 34 ... 38 mm, PU 10 pieces		**20114-729**
Cable shell for cable bundle 38 ... 42 mm, PU 10 pieces		**20114-730**
Cable shell for cable bundle 42 ... 46 mm, PU 10 pieces		**20114-731**
Cable shell for cable bundle 46 ... 50 mm, PU 10 pieces		20118-778
Slide nut for C-rail, PU 10 pieces		**21120-140**

Note

- Cable ties and Velcro for cable retention rail see page 1.162

Cable tie, Velcro

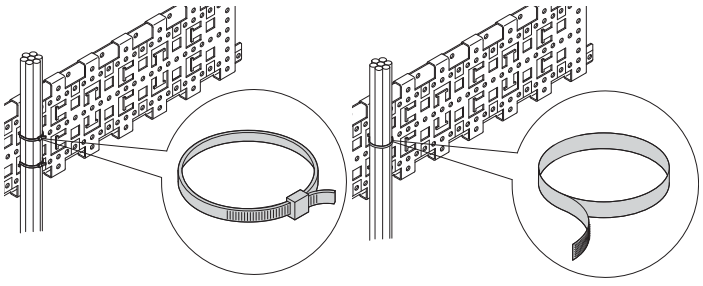

Cable tie

Velcro

- Fixing materials kit for cable ducting

Order Information

Description	Part no.
Cable tie, Plastic, 92 mm x 2.5 mm, PU 25 pieces	**20118-351**
Cable tie, Plastic, 186 mm x 5 mm, PU 25 pieces	**20118-352**
Cable tie, Plastic, 360 mm x 5 mm, PU 25 pieces	**20118-353**
Velcro strip, PE/PA, black, length 300 mm, PU 10 pieces	**20118-624**

Cabinets – VARISTAR Datacom/Networking

Deposit for excess cable lengths

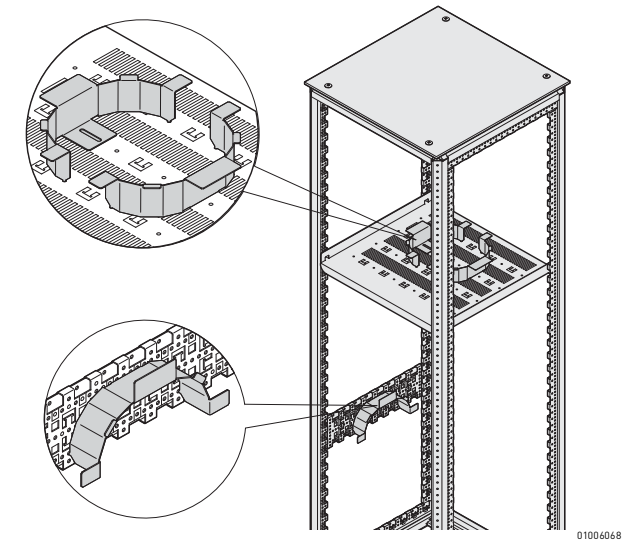

01006068

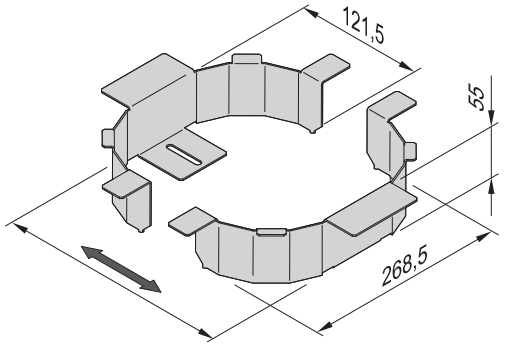

01006069

- For fixing on shelf or depth member
- Height with shelf is 2 U

Delivery comprises

Item	Qty	Description
1	2	Deposit for excess cable lengths, St, 1.5 mm, height 55 mm, RAL 7021
2	1	Assembly kit

Order Information

Description	Part no.
Deposit for excess cable lengths	**23130-050**

Note

- Velcro see page 1.162
- Shelves see from page 1.145
- Depth members see page 1.143

Cabinets – VARISTAR Datacom/Networking ServicePLUS

configuration

Simple. Fast. To the ideal product.

Components can be varied and combined freely

- Configuration tables from page 1.165
- Online configuration: www.schroff.co.uk/configuration

assembly

Assembled by professionals. Double benefit!

Assembly of all mechanical, electrical and electronic components by our specialists

- Without extra cost
- Ready for despatch within 10 working days

modification

Small changes. Large impact.

Custom drillings, cut-outs and special colours for off-the-shelf products

- Download CAD data and send back with modifications
- Ready for despatch within 10 working days

solution

Simple. Fast. From one source.

Integration and custom developments

- Climate control, complete assembly, cabling (power supply), function test
- Special sizes, customised solutions

academy

Knowledge. Sharing. Partnerships.

Knowledge transfer and partnership

- Seminars, white papers, CAD drawings, test reports, user reports
- Further information: www.varistar.co.uk

lifecycle

We are with you. For the entire product life.

Flexible support throughout the product lifecycle

- Delivery to point of use, installation service, exchange service, replacement parts

Varistar RAL 7021 ServicePLUS: Configuration and assembly

- Dimensions:
  - Height: 24 ... 47 U (1200 ... 2200 mm)
  - Width: 600 and 800 mm
  - Depth: 600, 800, 900, 1000, 1100 and 1200 mm
- Colour: Frame and all covers in black grey (RAL 7021)
- Build your cabinet out of individual components (please suffix each part number with /05)
- Once you have selected the desired cabinet dimensions, the row number (first column of the configuration tables) will guide you through all subsequent configuration pages that apply to these dimensions (see example below)
- The cabinet is assembled by us and ready for despatch within 10 working days

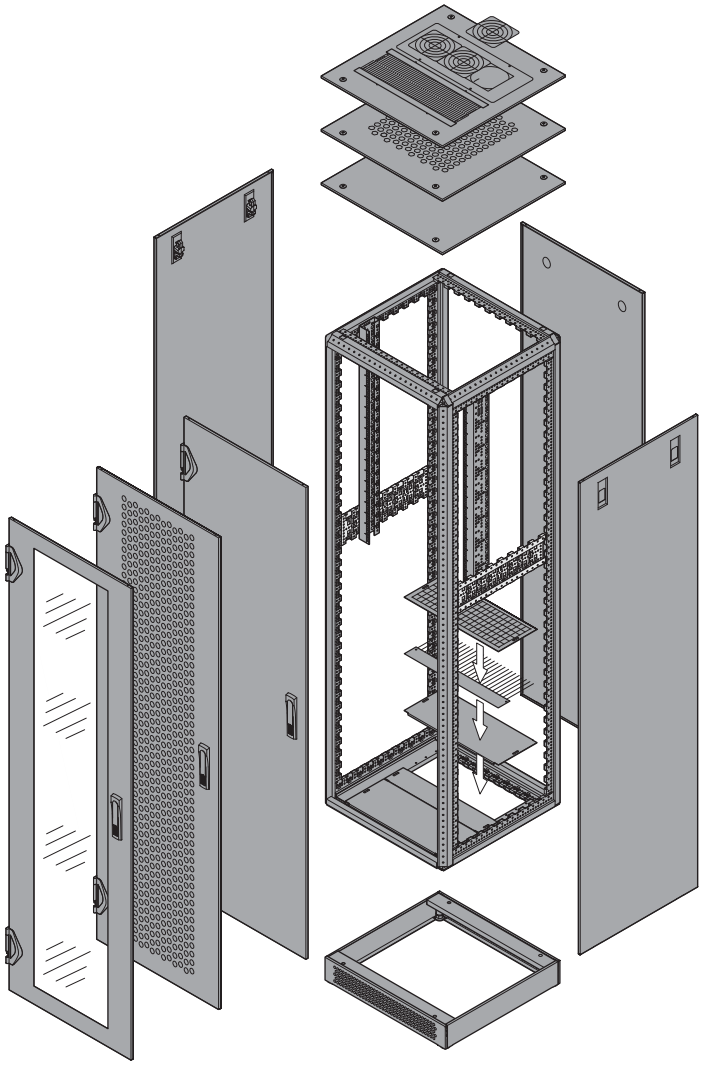

01004077

Example configuration (here: row 20)

Qty	Description	Order no.
1	Frame Slim-Line, height 2000 mm, width 600 mm, depth 800 mm, 1 piece	20130-019/05
1	Side panel with quick release fastener, PU 2 pieces	21130-051/05
2	Safety lock for side panel, PU 4 pieces	23130-132/05
1	Rear panel screw-fixed, 1 piece	21130-069/05
1	Glazed door with single point locking, 1 piece	21130-129/05
1	Adjustable feet, PU 4 pieces	23130-079/05
..	.....	.....

	Page
Frames, side-by-side mounting kits, adjustable feet, castors	1.166
Side panels, lateral cable ducting	1.167
Decorative frames, glass doors	1.168
Steel doors	1.169
Double doors, cover panels	1.170
Rear panels, connection plates	1.171
Top covers	1.172
Flat top covers with cut-out zones	1.173
Fan top covers	1.174
Base plates	1.175
Bases/plinths	1.176
19" panel/slide mounts	1.177
Swing frames	1.179
Shelves	1.180
19" shelves	1.182
Slide rails	1.184
Cable ducting with C-rails, cable support rails	1.185
Accessories for cabling	1.186
ServicePLUS RAL 7035/ RAL 7021	1.189

RAL 7021 Frames, side-by-side mounting kits, adjustable feet, castors

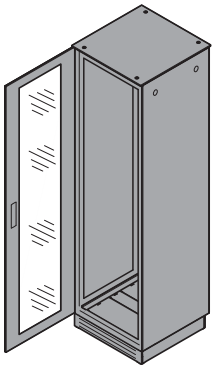

Completely in RAL 7021 (black grey)

	Cabinet dimensions				Frame		Side-by-side mounting kit IP 20	Adjustable feet	Castors	
					Slim-Line 400 kg	Heavy-Duty 800 kg			With 2 jacking feet	With adjustable feet
					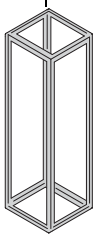 07004078		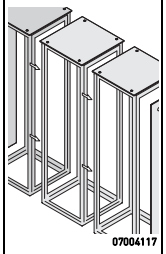 07004117	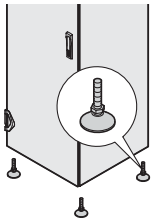 01004081	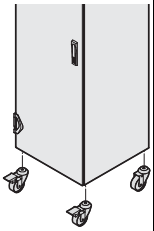 01004082	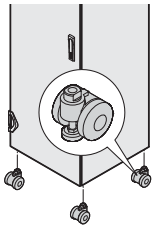 01004156
					static load-carrying capacity: 400 kg, St, 1.5 mm, zinc-plated, with central GND/ earthing point; please order adjustable feet or castors separately	For dynamic load, St, 1.5 mm, zinc-plated, with central GND/ earthing point; please order adjustable feet or castors separately	side-by-side mounting brackets (4 pieces), St	for the frame, static load-carrying capacity: 1000 kg, cannot be used with base/plinth	for the frame, static load-carrying capacity: 400 kg, cannot be used with base/plinth	for the frame, static load-carrying capacity: 400 kg, cannot be used with base/plinth
					RAL 7021	RAL 7021	RAL 7021			
No.	Height U	Height mm	Width mm	Depth mm	1 piece assembled	1 piece assembled	PU 1 kit supplied loose	PU 4 pieces assembled	PU 4 pieces assembled	PU 4 pieces assembled
1	24	1200	600	600	20130-001	20130-051	23130-061	23130-079	23130-077	23130-078
2	24	1200	600	800	20130-002	20130-052				
3	24	1200	600	900	20130-035	20130-085				
4	24	1200	600	1000	20130-036	20130-086				
5	24	1200	600	1100	20130-578	20130-588				
6	24	1200	600	1200	20130-579	20130-589				
7	24	1200	800	600	20130-003	20130-053	23130-061	23130-079	23130-077	23130-078
8	24	1200	800	800	20130-004	20130-054				
9	24	1200	800	900	20130-037	20130-087				
10	24	1200	800	1000	20130-038	20130-088				
11	29	1400	600	600	20130-005	20130-055	23130-061	23130-079	23130-077	23130-078
12	29	1400	600	800	20130-006	20130-056				
13	29	1400	800	600	20130-007	20130-057	23130-061	23130-079	23130-077	23130-078
14	29	1400	800	800	20130-008	20130-058				
15	38	1800	600	600	20130-013	20130-063	23130-061	23130-079	23130-077	23130-078
16	38	1800	600	800	20130-014	20130-064				
17	38	1800	800	600	20130-015	20130-065	23130-061	23130-079	23130-077	23130-078
18	38	1800	800	800	20130-016	20130-066				
19	42	2000	600	600	20130-018	20130-068	23130-061	23130-079	23130-077	23130-078
20	42	2000	600	800	20130-019	20130-069				
21	42	2000	600	900	20130-020	20130-070				
22	42	2000	600	1000	20130-021	20130-071				
23	42	2000	600	1100	20130-580	20130-590				
24	42	2000	600	1200	20130-581	20130-591				
25	42	2000	800	600	20130-022	20130-072	23130-061	23130-079	23130-077	23130-078
26	42	2000	800	800	20130-023	20130-073				
27	42	2000	800	900	20130-024	20130-074				
28	42	2000	800	1000	20130-025	20130-075				
29	42	2000	800	1100	20130-582	20130-592				
30	42	2000	800	1200	20130-583	20130-593				
31	47	2200	600	600	20130-027	20130-077	23130-061	23130-079	23130-077	23130-078
32	47	2200	600	800	20130-028	20130-078				
33	47	2200	600	900	20130-029	20130-079				
34	47	2200	600	1000	20130-030	20130-080				
35	47	2200	600	1100	20130-584	20130-594				
36	47	2200	600	1200	20130-585	20130-595				
37	47	2200	800	600	20130-031	20130-081	23130-061	23130-079	23130-077	23130-078
38	47	2200	800	800	20130-032	20130-082				
39	47	2200	800	900	20130-033	20130-083				
40	47	2200	800	1000	20130-034	20130-084				
41	47	2200	800	1100	20130-586	20130-596				
42	47	2200	800	1200	20130-587	20130-597				

Cabinets – VARISTAR Datacom/Networking

RAL 7021 Side panels, lateral cable ducting

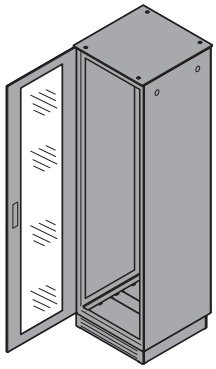

Completely in RAL 7021 (black grey)

	Cabinet dimensions				Side panel		Screw-fixed side panel		Lateral cable ducting		
					With quick release fastener	Lock	Side panel	Inside locking	Cable panel Width 150 mm	Cable panel Width 250 mm	Cable ladder Width 300 mm
					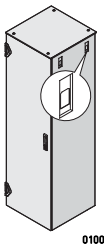 01004084	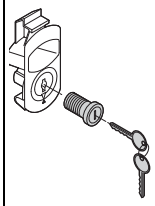 01004072	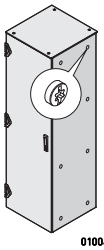 01004083	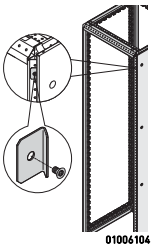 01006104	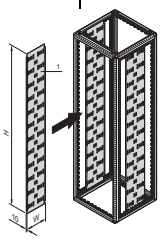 01006103		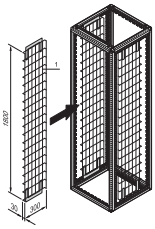 01006075
					St, 1 mm, incl. GND/earthing, please order lock separately	for quick-release fasteners of one side panel; 4 locks sufficient for 2 side panels	St, 1 mm, incl. GND/earthing	bracket, St, 1 mm, finish AlZn; with retention screws	St, 1 mm, with cut-outs for cable ties or Velcro see page 1.186		round steel, zinc-plated, height 1800 mm, for cable ties or Velcro see page 1.186
					RAL 7021		RAL 7021		RAL 7021	RAL 7021	
No.	Height U	mm	Width mm	Depth mm	PU 2 pieces assembled	PU 4 pieces assembled	PU 2 pieces assembled	PU 2 pieces assembled	PU 2 pieces assembled	PU 2 pieces assembled	PU 2 pieces assembled
1	24	1200	600	600	21130-041	23130-132	21130-001	23130-373	–	–	–
2	24	1200	600	800	21130-042		21130-002				
3	24	1200	600	900	21130-524		21130-516				
4	24	1200	600	1000	21130-525		21130-517				
5	24	1200	600	1100	–		21130-532				
6	24	1200	600	1200	–		21130-533				
7	24	1200	800	600	21130-041	23130-132	21130-001	23130-373	–	–	–
8	24	1200	800	800	21130-042		21130-002				
9	24	1200	800	900	21130-524		21130-516				
10	24	1200	800	1000	21130-525		21130-517				
11	29	1400	600	600	21130-043	23130-132	21130-003	23130-373	–	–	–
12	29	1400	600	800	21130-044		21130-004				
13	29	1400	800	600	21130-043	23130-132	21130-003	23130-373	–	–	–
14	29	1400	800	800	21130-044		21130-004				
15	38	1800	600	600	21130-047	23130-132	21130-007	23130-373	23130-420	23130-149	–
16	38	1800	600	800	21130-048		21130-008				
17	38	1800	800	600	21130-047	23130-132	21130-007	23130-373	23130-420	23130-149	–
18	38	1800	800	800	21130-048		21130-008				
19	42	2000	600	600	21130-050	23130-132	21130-010	23130-373	23130-421	23130-150	23130-554
20	42	2000	600	800	21130-051		21130-011				
21	42	2000	600	900	21130-052		21130-012				
22	42	2000	600	1000	21130-053		21130-013				
23	42	2000	600	1100	–		21130-534				
24	42	2000	600	1200	–		21130-535				
25	42	2000	800	600	21130-050	23130-132	21130-010	23130-373	23130-421	23130-150	23130-554
26	42	2000	800	800	21130-051		21130-011				
27	42	2000	800	900	21130-052		21130-012				
28	42	2000	800	1000	21130-053		21130-013				
29	42	2000	800	1100	–		21130-534				
30	42	2000	800	1200	–		21130-535				
31	47	2200	600	600	21130-055	23130-132	21130-015	23130-373	23130-422	23130-151	23130-555
32	47	2200	600	800	21130-056		21130-016				
33	47	2200	600	900	21130-057		21130-017				
34	47	2200	600	1000	21130-058		21130-017				
35	47	2200	600	1100	–		21130-536				
36	47	2200	600	1200	–		21130-537				
37	47	2200	800	600	21130-055	23130-132	21130-015	23130-373	23130-422	23130-151	23130-555
38	47	2200	800	800	21130-056		21130-016				
39	47	2200	800	900	21130-057		21130-017				
40	47	2200	800	1000	21130-058		21130-017				
41	47	2200	800	1100	–		21130-536				
42	47	2200	800	1200	–		21130-537				

Cabinets – VARISTAR Datacom/Networking

RAL 7021 Decorative frames, glass doors

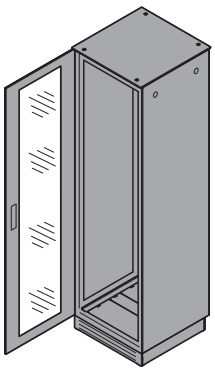

Completely in RAL 7021 (black grey)

	Cabinet dimensions				Deco frame		Glazed door		Glazed door	DIN profile half cylinder
					Deco frame	Adaptor bracket	Single point locking	Lever handle	3-point locking	
					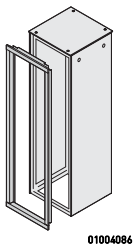 01004086	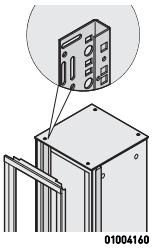 01004160	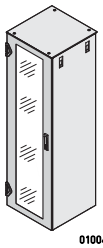 01004088	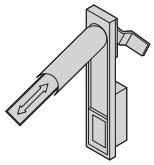 01004147	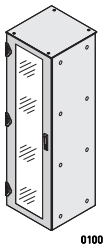 01004091	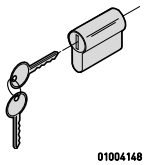 01004148
					Al, 19" plane integrated, front open, incl. GND/earthing, no door can be fitted	St, 2 mm, for deco frame, for assembly of slide rails and shelves	St, 1.5 mm, Sekurit glass, 6 mm, opening angle 180°, lock cover, incl. GND/ earthing	with push button for doors with single point locking	St, 1.5 mm, Sekurit glass, 6 mm, opening angle 180°, lever handle with push button, incl. GND/ earthing	for lever handle, common locking
					RAL 7021	RAL 7021	RAL 7021		RAL 7021	
No.	Height U	Height mm	Width mm	Depth mm	1 piece assembled	PU 1 pair assembled	1 piece assembled	1 piece assembled	1 piece assembled	1 piece assembled
1	24	1200	600	600	21130-231	23130-230	21130-121	23130-067	21130-181	25127-995
2	24	1200	600	800						
3	24	1200	600	900						
4	24	1200	600	1000						
5	24	1200	600	1100						
6	24	1200	600	1200						
7	24	1200	800	600	–	–	21130-122	23130-067	21130-182	25127-995
8	24	1200	800	800						
9	24	1200	800	900						
10	24	1200	800	1000						
11	29	1400	600	600	21130-232	23130-231	21130-123	23130-067	21130-183	25127-995
12	29	1400	600	800						
13	29	1400	800	600	–	–	21130-124	23130-067	–	25127-995
14	29	1400	800	800						
15	38	1800	600	600	21130-234	23130-233	21130-127	23130-067	21130-187	25127-995
16	38	1800	600	800						
17	38	1800	800	600	–	–	21130-128	23130-067	21130-188	25127-995
18	38	1800	800	800						
19	42	2000	600	600	21130-235	23130-234	21130-129	23130-067	21130-189	25127-995
20	42	2000	600	800						
21	42	2000	600	900						
22	42	2000	600	1000						
23	42	2000	600	1100						
24	42	2000	600	1200						
25	42	2000	800	600	–	–	21130-130	23130-067	21130-190	25127-995
26	42	2000	800	800						
27	42	2000	800	900						
28	42	2000	800	1000						
29	42	2000	800	1100						
30	42	2000	800	1200						
31	47	2200	600	600	21130-236	23130-235	21130-131	23130-067	21130-191	25127-995
32	47	2200	600	800						
33	47	2200	600	900						
34	47	2200	600	1000						
35	47	2200	600	1100						
36	47	2200	600	1200						
37	47	2200	800	600	–	–	21130-132	23130-067	21130-192	25127-995
38	47	2200	800	800						
39	47	2200	800	900						
40	47	2200	800	1000						
41	47	2200	800	1100						
42	47	2200	800	1200						

Cabinets – VARISTAR Datacom/Networking

RAL 7021 Steel doors

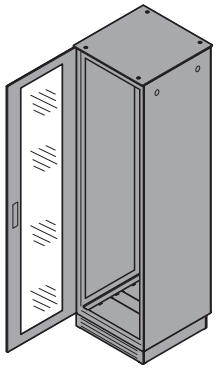

Completely in RAL 7021 (black grey)

	Cabinet dimensions				Steel door, single point locking				Steel door, 3-point locking		DIN profile half cylinder
					Plain	Plain, with mounting frame on inner side	Perforated	Lever handle	Plain	Perforated	
					01004089	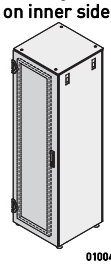 01004089	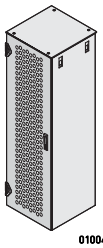 01004090	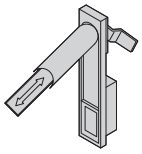 01004147	01004090	01004093	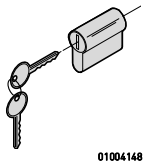 01004148
					St, 1 mm, opening angle 180°, lock cover, incl. GND/ earthing	St, 1.5 mm, opening angle 180°, lock cover, incl. GND/ earthing, designed to carry extensive cut-outs and assemblies	St, 1.5 mm, opening angle 180°, lock cover, incl. GND/ earthing	with push button for doors with single point locking	St, 1.5 mm, opening angle 180°, with mounting frame on inner side, lever handle with push button, incl. GND/ earthing	St, 1.5 mm, opening angle 180°, lever handle with push button, incl. GND/ earthing	for lever handle, common locking
					RAL 7021	RAL 7021	RAL 7021		RAL 7021	RAL 7021	
No.	Height U	Height mm	Width mm	Depth mm	1 piece assembled	1 piece assembled	1 piece assembled	1 piece assembled	1 piece assembled	1 piece assembled	1 piece assembled
1	24	1200	600	600	21130-106	21130-566	21130-136	23130-067	21130-151	21130-700	25127-995
2	24	1200	600	800							
3	24	1200	600	900							
4	24	1200	600	1000							
5	24	1200	600	1100							
6	24	1200	600	1200							
7	24	1200	800	600	21130-107	21130-567	21130-137	23130-067	21130-152	21130-701	25127-995
8	24	1200	800	800							
9	24	1200	800	900							
10	24	1200	800	1000							
11	29	1400	600	600	21130-108	21130-568	21130-138	23130-067	21130-153	21130-702	25127-995
12	29	1400	600	800							
13	29	1400	800	600	21130-109	21130-569	21130-139	23130-067	21130-154	21130-703	25127-995
14	29	1400	800	800							
15	38	1800	600	600	21130-112	21130-572	21130-142	23130-067	21130-157	21130-706	25127-995
16	38	1800	600	800							
17	38	1800	800	600	21130-113	21130-573	21130-143	23130-067	21130-158	21130-707	25127-995
18	38	1800	800	800							
19	42	2000	600	600	21130-114	21130-574	21130-144	23130-067	21130-159	21130-708	25127-995
20	42	2000	600	800							
21	42	2000	600	900							
22	42	2000	600	1000							
23	42	2000	600	1100							
24	42	2000	600	1200							
25	42	2000	800	600	21130-115	21130-575	21130-145	23130-067	21130-160	21130-709	25127-995
26	42	2000	800	800							
27	42	2000	800	900							
28	42	2000	800	1000							
29	42	2000	800	1100							
30	42	2000	800	1200							
31	47	2200	600	600	21130-116	21130-576	21130-146	23130-067	21130-161	21130-710	25127-995
32	47	2200	600	800							
33	47	2200	600	900							
34	47	2200	600	1000							
35	47	2200	600	1100							
36	47	2200	600	1200							
37	47	2200	800	600	21130-117	21130-577	21130-147	23130-067	21130-162	21130-711	25127-995
38	47	2200	800	800							
39	47	2200	800	900							
40	47	2200	800	1000							
41	47	2200	800	1100							
42	47	2200	800	1200							

RAL 7021 Double doors, cover panels

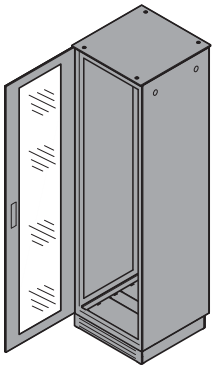

Completely in RAL 7021 (black grey)

	Cabinet dimensions				Double door, 3-point locking			DIN profile half cylinder	Cover panel	
					Glazed	Plain	Perforated		Hinged	Brush strip for cover panel
					01005065	01005064	01005066	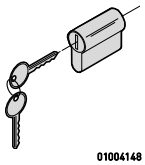 01004148	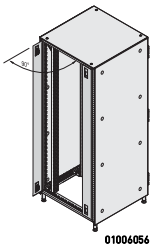 01006056	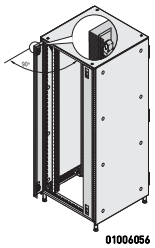 01006056
					frame, St, 1.5 mm, Sekurit glass, 6 mm, opening angle 180°, lever handle with push button, incl. GND/ earthing	St, 1.5 mm, opening angle 180°, lever handle with push button, incl. GND/ earthing	St, 1.5 mm, opening angle 180°, lever handle with push button, incl. GND/ earthing	for lever handle, common locking	St, 1 mm, to cover the cabling space next to the panel/ slide mounts	black
					RAL 7021	RAL 7021	RAL 7021		RAL 7021	
No.	Height U	Height mm	Width mm	Depth mm	1 piece assembled	1 piece assembled	1 piece assembled	1 piece assembled	PU 2 pieces assembled	PU 2 pieces assembled
1	24	1200	600	600	21130-670	21130-657	21130-683	25127-995	–	–
2	24	1200	600	800						
3	24	1200	600	900						
4	24	1200	600	1000						
5	24	1200	600	1100						
6	24	1200	600	1200						
7	24	1200	800	600	21130-671	21130-658	21130-684	25127-995	–	–
8	24	1200	800	800						
9	24	1200	800	900						
10	24	1200	800	1000						
11	29	1400	600	600	21130-672	21130-659	21130-685	25127-995	–	–
12	29	1400	600	800						
13	29	1400	800	600	21130-673	21130-660	21130-686	25127-995	–	–
14	29	1400	800	800						
15	38	1800	600	600	21130-676	21130-663	21130-689	25127-995	–	–
16	38	1800	600	800						
17	38	1800	800	600	21130-677	21130-664	21130-690	25127-995	–	–
18	38	1800	800	800						
19	42	2000	600	600	21130-678	21130-665	21130-691	25127-995	–	–
20	42	2000	600	800						
21	42	2000	600	900						
22	42	2000	600	1000						
23	42	2000	600	1100						
24	42	2000	600	1200						
25	42	2000	800	600	21130-679	21130-666	21130-692	25127-995	23130-343	23130-379
26	42	2000	800	800						
27	42	2000	800	900						
28	42	2000	800	1000						
29	42	2000	800	1100						
30	42	2000	800	1200						
31	47	2200	600	600	21130-680	21130-667	21130-692	25127-995	–	–
32	47	2200	600	800						
33	47	2200	600	900						
34	47	2200	600	1000						
35	47	2200	600	1100						
36	47	2200	600	1200						
37	47	2200	800	600	21130-681	21130-668	21130-694	25127-995	–	–
38	47	2200	800	800						
39	47	2200	800	900						
40	47	2200	800	1000						
41	47	2200	800	1100						
42	47	2200	800	1200						

Cabinets – VARISTAR Datacom/Networking

RAL 7021 Rear panels, connection plates

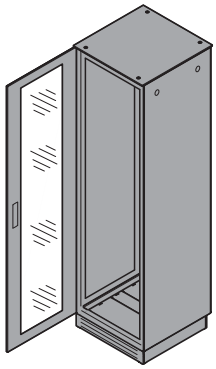

Completely in RAL 7021 (black grey)

	Cabinet dimensions				Rear panel		Screw-fixed rear panel	Dimensioning connecting plate door/rear panel	Intermediate plate for door and rear panel		
					With quick release fastener	Lock			Plain	With brush strip	Assembly kit
					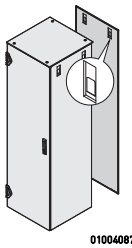 01004087	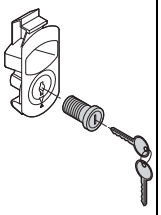 01004072	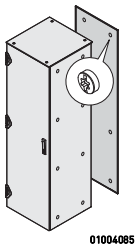 01004085	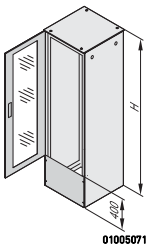 01005071	01005063	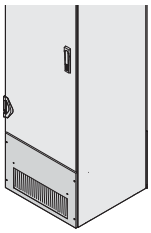 01005069	
					St, 1 mm, incl. GND/earthing, please order lock separately	for quick-release fasteners of rear panel	St, 1 mm, incl. GND/earthing	door and rear panel must be selected 400 mm shorter than the cabinet height; cannot be used with double door	St, 1 mm, assembly also possible at top, height 400 mm, please order assembly kit separately in conjunction with rear panel	St, 1 mm, assembly also possible at top, height 400 mm, please order assembly kit separately in conjunction with rear panel	only required if rear panel with quick-release fastener is assembled above the connecting plate
					RAL 7021		RAL 7021		RAL 7021	RAL 7021	
No.	Height U	mm	Width mm	Depth mm	1 piece assembled	PU 2 pieces assembled	1 piece assembled	Width mm	1 piece assembled	1 piece assembled	PU 1 kit assembled
1	24	1200	600	600	21130-091	23130-133	21130-061	–	–	–	–
2	24	1200	600	800							
3	24	1200	600	900							
4	24	1200	600	1000							
5	24	1200	600	1100							
6	24	1200	600	1200							
7	24	1200	800	600	21130-092	23130-133	21130-062	–	–	–	–
8	24	1200	800	800							
9	24	1200	800	900							
10	24	1200	800	1000							
11	29	1400	600	600	21130-093	23130-133	21130-063	–	–	–	–
12	29	1400	600	800							
13	29	1400	800	600	21130-094	23130-133	21130-064	–	–	–	–
14	29	1400	800	800							
15	38	1800	600	600	21130-097	23130-133	21130-067	600	21130-472	21130-478	23130-164
16	38	1800	600	800							
17	38	1800	800	600	21130-098	23130-133	21130-068	800	21130-473	21130-479	23130-164
18	38	1800	800	800							
19	42	2000	600	600	21130-099	23130-133	21130-069	600	21130-472	21130-478	23130-164
20	42	2000	600	800							
21	42	2000	600	900							
22	42	2000	600	1000							
23	42	2000	600	1100							
24	42	2000	600	1200							
25	42	2000	800	600	21130-100	23130-133	21130-070	800	21130-473	21130-479	23130-164
26	42	2000	800	800							
27	42	2000	800	900							
28	42	2000	800	1000							
29	42	2000	800	1100							
30	42	2000	800	1200							
31	47	2200	600	600	21130-101	23130-133	21130-071	600	21130-472	21130-478	23130-164
32	47	2200	600	800							
33	47	2200	600	900							
34	47	2200	600	1000							
35	47	2200	600	1100							
36	47	2200	600	1200							
37	47	2200	800	600	21130-102	23130-133	21130-072	800	21130-473	21130-479	23130-164
38	47	2200	800	800							
39	47	2200	800	900							
40	47	2200	800	1000							
41	47	2200	800	1100							
42	47	2200	800	1200							

RAL 7021 Top covers

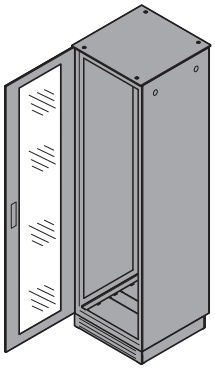

Completely in RAL 7021 (black grey)

					Flat top cover			Flat top cover, raised	
					Plain flush top cover	Perforated	Lifting eye	Spacer	Lifting eye
					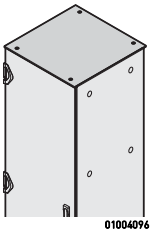 01004096	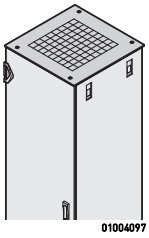 01004097	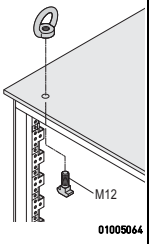 01005064	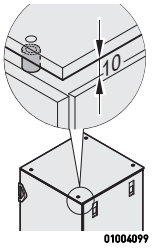 01004099	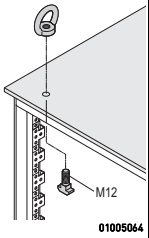 01005064
					St, 1.5 mm, incl. GND/ earthing	St, 1.5 mm, fully perforated, 6 mm perforated, incl. GND/ earthing	for flat top cover, applications and load in accordance with DIN 582	St, zinc-plated, for raising a top cover by 10 mm	for raised flat top cover, applications and load in accordance with DIN 582
	Cabinet dimensions				RAL 7021	RAL 7021		RAL 7021	
No.	Height U	mm	Width mm	Depth mm	1 piece assembled	1 piece assembled	PU 4 pieces assembled	PU 4 pieces assembled	PU 4 pieces assembled
1	24	1200	600	600	21130-242	21130-262	23130-072	23130-068	23130-085
2	24	1200	600	800	21130-243	21130-263			
3	24	1200	600	900	21130-244	21130-264			
4	24	1200	600	1000	21130-245	21130-265			
5	24	1200	600	1100	21130-538	21130-546			
6	24	1200	600	1200	21130-539	21130-547			
7	24	1200	800	600	21130-246	21130-266	23130-072	23130-068	23130-085
8	24	1200	800	800	21130-247	21130-267			
9	24	1200	800	900	21130-248	21130-268			
10	24	1200	800	1000	21130-249	21130-269			
11	29	1400	600	600	21130-242	21130-262	23130-072	23130-068	23130-085
12	29	1400	600	800	21130-243	21130-263			
13	29	1400	800	600	21130-246	21130-266	23130-072	23130-068	23130-085
14	29	1400	800	800	21130-247	21130-267			
15	38	1800	600	600	21130-242	21130-262	23130-072	23130-068	23130-085
16	38	1800	600	800	21130-243	21130-263			
17	38	1800	800	600	21130-246	21130-266	23130-072	23130-068	23130-085
18	38	1800	800	800	21130-247	21130-267			
19	42	2000	600	600	21130-242	21130-262	23130-072	23130-068	23130-085
20	42	2000	600	800	21130-243	21130-263			
21	42	2000	600	900	21130-244	21130-264			
22	42	2000	600	1000	21130-245	21130-265			
23	42	2000	600	1100	21130-538	21130-546			
24	42	2000	600	1200	21130-539	21130-547			
25	42	2000	800	600	21130-246	21130-266	23130-072	23130-068	23130-085
26	42	2000	800	800	21130-247	21130-267			
27	42	2000	800	900	21130-248	21130-268			
28	42	2000	800	1000	21130-249	21130-269			
29	42	2000	800	1100	21130-540	21130-548			
30	42	2000	800	1200	21130-541	21130-549			
31	47	2200	600	600	21130-242	21130-262	23130-072	23130-068	23130-085
32	47	2200	600	800	21130-243	21130-263			
33	47	2200	600	900	21130-244	21130-264			
34	47	2200	600	1000	21130-245	21130-265			
35	47	2200	600	1100	21130-538	21130-546			
36	47	2200	600	1200	21130-539	21130-547			
37	47	2200	800	600	21130-246	21130-266	23130-072	23130-068	23130-085
38	47	2200	800	800	21130-247	21130-267			
39	47	2200	800	900	21130-248	21130-268			
40	47	2200	800	1000	21130-249	21130-269			
41	47	2200	800	1100	21130-540	21130-548			
42	47	2200	800	1200	21130-541	21130-549			

Cabinets – VARISTAR Datacom/Networking

RAL 7021 Flat top covers with cut-out zones

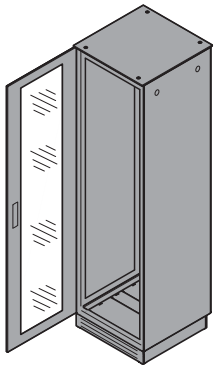

Completely in RAL 7021 (black grey)

	Cabinet dimensions				Flat top cover with cable through-ducting openings	Flat top cover with cut-out zones	Top cover assemblies				
							Brush strip	Fan insert	Cover plate for cut-out zones, perforated	Edge protection	Lifting eye
					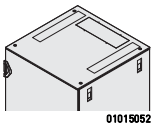 01015052	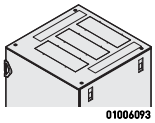 01006093	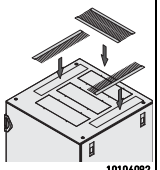 10106092	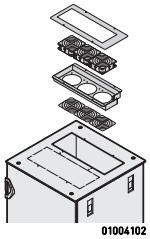 01004102	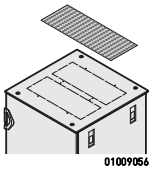 01009056	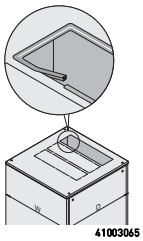 41003065	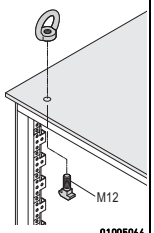 01005064
					St, 1.5 mm, incl. GND/ earthing, cutout size 85 mm x 449 mm	St, 1.5 mm, incl. GND/ earthing, number of cut-outs and dimension drawings see page 1.9	nylon, black, one brush strip covers a lateral cut-out, two brush strips cover a center cut-out	230 V_{AC}, with three fans, 410 m^3/h, completely wired, connecting cable IEC 320	St, 1.5 mm, 6 mm hole diameter, incl. GND/ earthing	PVC, 3 m, black, for open cut-out zones	for flat top cover, applications and load in accordance with DIN 582
					RAL 7021	RAL 7021		RAL 7021	RAL 7021		
No.	Height U	mm	Width mm	Depth mm	1 piece fitted	1 piece assembled	PU 2 pieces assembled	1 piece assembled	1 piece assembled	1 piece enclosed loose	PU 4 pieces assembled
1	24	1200	600	600	–	21130-252	23130-069	23130-070	23130-071	28127-281	23130-072
2	24	1200	600	800	–	21130-253					
3	24	1200	600	900	–	21130-254					
4	24	1200	600	1000	21130-712	21130-255					
5	24	1200	600	1100	21130-713	21130-542					
6	24	1200	600	1200	21130-714	21130-543					
7	24	1200	800	600	–	21130-256	23130-069	23130-070	23130-071	28127-281	23130-072
8	24	1200	800	800	–	21130-257					
9	24	1200	800	900	–	21130-258					
10	24	1200	800	1000	21130-715	21130-259					
11	29	1400	600	600	–	21130-252	23130-069	23130-070	23130-071	28127-281	23130-072
12	29	1400	600	800	–	21130-253					
13	29	1400	800	600	–	21130-256	23130-069	23130-070	23130-071	28127-281	23130-072
14	29	1400	800	800	–	21130-257					
15	38	1800	600	600	–	21130-252	23130-069	23130-070	23130-071	28127-281	23130-072
16	38	1800	600	800	–	21130-253					
17	38	1800	800	600	–	21130-256	23130-069	23130-070	23130-071	28127-281	23130-072
18	38	1800	800	800	–	21130-257					
19	42	2000	600	600	–	21130-252	23130-069	23130-070	23130-071	28127-281	23130-072
20	42	2000	600	800	–	21130-253					
21	42	2000	600	900	–	21130-254					
22	42	2000	600	1000	21130-712	21130-255					
23	42	2000	600	1100	21130-713	21130-542					
24	42	2000	600	1200	21130-714	21130-543					
25	42	2000	800	600	–	21130-256	23130-069	23130-070	23130-071	28127-281	23130-072
26	42	2000	800	800	–	21130-257					
27	42	2000	800	900	–	21130-258					
28	42	2000	800	1000	21130-715	21130-259					
29	42	2000	800	1100	21130-716	21130-544					
30	42	2000	800	1200	21130-717	21130-545					
31	47	2200	600	600	–	21130-252	23130-069	23130-070	23130-071	28127-281	23130-072
32	47	2200	600	800	–	21130-253					
33	47	2200	600	900	–	21130-254					
34	47	2200	600	1000	21130-712	21130-255					
35	47	2200	600	1100	21130-713	21130-542					
36	47	2200	600	1200	21130-714	21130-543					
37	47	2200	800	600	–	21130-256	23130-069	23130-070	23130-071	28127-281	23130-072
38	47	2200	800	800	–	21130-257					
39	47	2200	800	900	–	21130-258					
40	47	2200	800	1000	21130-715	21130-259					
41	47	2200	800	1100	21130-716	21130-544					
42	47	2200	800	1200	21130-717	21130-545					

RAL 7021 Fan top covers

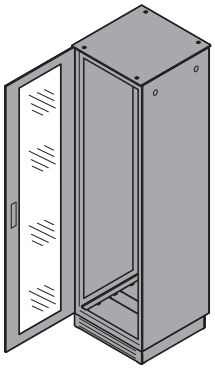

Completely in RAL 7021 (black grey)

	Cabinet dimensions				Fan top cover				
					Top cover for 6 fans	Fan for fan top cover	Thermostat	Speed control	Lifting eye
					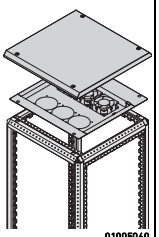 01005060	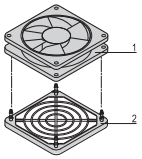 kta44844	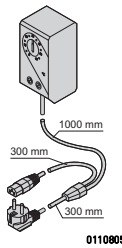 01108052	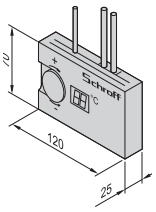 01105055	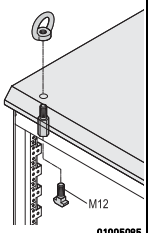 01005085
					St, 1.5 mm, raised cover, 3 axial fans, 230 V_{AC}, incl. cabling andGND/earthing, connecting cable 2.5 m, SCHUKO/ IEC60320 C12 plug	fan with grille for top assembly, 230 V_{AC}, 38x119x119 mm, for 50 Hz, 162 m^3/h	with mains cable 230 V_{AC} (SCHUKO/UTE plug/ IEC 60320 C13 socket), adjustment range 0 ... 60°C	fully wired, 90 ... 264 V_{AC}, input SCHUKO/ UTE plug, outlet IEC 60320 C13 socket; external NTC sensor 1.5 m	for fan top cover, applications and load in accordance with DIN 582
					RAL 7021				
No.	Height U	Height mm	Width mm	Depth mm	1 piece assembled	1 piece assembled	1 piece assembled	1 piece assembled	PU 4 pieces assembled
1	24	1200	600	600	21130-400	23130-165	20118-750	60715-005	23130-090
2	24	1200	600	800	21130-401				
3	24	1200	600	900	21130-406				
4	24	1200	600	1000	21130-407				
5	24	1200	600	1100	–				
6	24	1200	600	1200	–				
7	24	1200	800	600	21130-402	23130-165	20118-750	60715-005	23130-090
8	24	1200	800	800	21130-403				
9	24	1200	800	900	21130-404				
10	24	1200	800	1000	21130-405				
11	29	1400	600	600	21130-400	23130-165	20118-750	60715-005	23130-090
12	29	1400	600	800	21130-401				
13	29	1400	800	600	21130-402	23130-165	20118-750	60715-005	23130-090
14	29	1400	800	800	21130-403				
15	38	1800	600	600	21130-400	23130-165	20118-750	60715-005	23130-090
16	38	1800	600	800	21130-401				
17	38	1800	800	600	21130-402	23130-165	20118-750	60715-005	23130-090
18	38	1800	800	800	21130-403				
19	42	2000	600	600	21130-400	23130-165	20118-750	60715-005	23130-090
20	42	2000	600	800	21130-401				
21	42	2000	600	900	21130-406				
22	42	2000	600	1000	21130-407				
23	42	2000	600	1100	–				
24	42	2000	600	1200	–				
25	42	2000	800	600	21130-402	23130-165	20118-750	60715-005	23130-090
26	42	2000	800	800	21130-403				
27	42	2000	800	900	21130-404				
28	42	2000	800	1000	21130-405				
29	42	2000	800	1100	–				
30	42	2000	800	1200	–				
31	47	2200	600	600	21130-400	23130-165	20118-750	60715-005	23130-090
32	47	2200	600	800	21130-401				
33	47	2200	600	900	21130-406				
34	47	2200	600	1000	21130-407				
35	47	2200	600	1100	–				
36	47	2200	600	1200	–				
37	47	2200	800	600	21130-402	23130-165	20118-750	60715-005	23130-090
38	47	2200	800	800	21130-403				
39	47	2200	800	900	21130-404				
40	47	2200	800	1000	21130-405				
41	47	2200	800	1100	–				
42	47	2200	800	1200	–				

Cabinets – VARISTAR Datacom/Networking

RAL 7021 Base plates

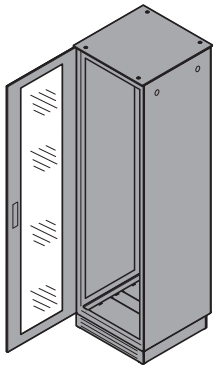

Completely in RAL 7021 (black grey)

Cabinet dimensions

No.	Height U	Height mm	Width mm	Depth mm	Base plate, multi-piece	Base plate: Brush strip	Base plate: Dust filter set	Base plate: Cover plate	Base plate for lateral cable ducting: For cabinet width 600 mm	Base plate for lateral cable ducting: For cabinet width 800 mm	Base plate for lateral cable ducting: Brush strip
					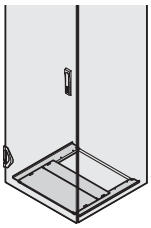 01004104	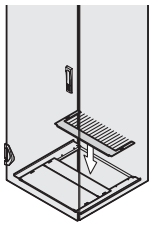 01004105	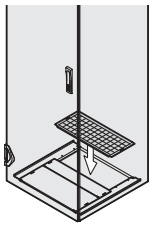 01004059	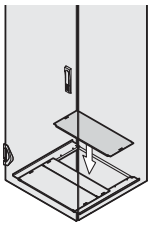 01004106	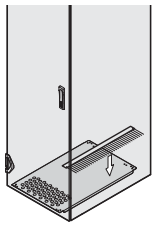 01006072	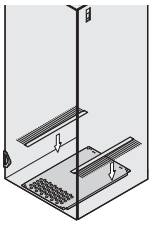 01006094	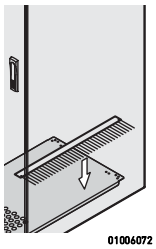 01006072
					St, 1.5 mm, multi-piece, opening to rear 200 mm deep (no rear opening with 300 mm cabinet depth), incl. GND/ earthing, dimensions see page 1.9	nylon, black	filter mat, white, class M1, in accordance with EN 799-G3	St, 1.5 mm, please order gasket IP55 separately	St, 1.5 mm, one brush strip opening on one side, please order brush strip separately	St, 1.5 mm, brush strip opening on both sides, please order brush strip separately	nylon, black, is assembled laterally, please order one brush strip at cabinet width of 600 mm, but two brush strips at cabinet width of 800 mm
					RAL 7021			RAL 7021	RAL 7021	RAL 7021	
					1 piece assembled	1 piece assembled	1 piece assembled	1 piece assembled	1 piece assembled	1 piece assembled	1 piece assembled
1	24	1200	600	600	23130-001	23130-074	23130-075	23130-076	23130-378	–	23130-074
2	24	1200	600	800	23130-002				23130-353		23130-134
3	24	1200	600	900	23130-003				23130-354		23130-374
4	24	1200	600	1000	23130-004				23130-355		23130-375
5	24	1200	600	1100	23130-358				23130-356		23130-376
6	24	1200	600	1200	23130-359				23130-357		23130-377
7	24	1200	800	600	23130-005	23130-134	23130-135	23130-136	–	23130-378	23130-074
8	24	1200	800	800	23130-006					23130-353	23130-134
9	24	1200	800	900	23130-007					23130-354	23130-374
10	24	1200	800	1000	23130-008					23130-355	23130-375
11	29	1400	600	600	23130-001	23130-074	23130-075	23130-076	23130-378	–	23130-074
12	29	1400	600	800	23130-002				23130-353		23130-134
13	29	1400	800	600	23130-005	23130-134	23130-135	23130-136	–	23130-378	23130-074
14	29	1400	800	800	23130-006					23130-353	23130-134
15	38	1800	600	600	23130-001	23130-074	23130-075	23130-076	23130-378	–	23130-074
16	38	1800	600	800	23130-002				23130-353		23130-134
17	38	1800	800	600	23130-005	23130-134	23130-135	23130-136	–	23130-378	23130-074
18	38	1800	800	800	23130-006					23130-353	23130-134
19	42	2000	600	600	23130-001	23130-074	23130-075	23130-076	23130-378	–	23130-074
20	42	2000	600	800	23130-002				23130-353		23130-134
21	42	2000	600	900	23130-003				23130-354		23130-374
22	42	2000	600	1000	23130-004				23130-355		23130-375
23	42	2000	600	1100	23130-358				23130-356		23130-376
24	42	2000	600	1200	23130-359				23130-357		23130-377
25	42	2000	800	600	23130-005	23130-134	23130-135	23130-136	–	23130-378	23130-074
26	42	2000	800	800	23130-006					23130-353	23130-134
27	42	2000	800	900	23130-007					23130-354	23130-374
28	42	2000	800	1000	23130-008					23130-355	23130-375
29	42	2000	800	1100	23130-360					23130-356	23130-376
30	42	2000	800	1200	23130-361					23130-357	23130-377
31	47	2200	600	600	23130-001	23130-074	23130-075	23130-076	23130-378	–	23130-074
32	47	2200	600	800	23130-002				23130-353		23130-134
33	47	2200	600	900	23130-003				23130-354		23130-374
34	47	2200	600	1000	23130-004				23130-355		23130-375
35	47	2200	600	1100	23130-358				23130-356		23130-376
36	47	2200	600	1200	23130-359				23130-357		23130-377
37	47	2200	800	600	23130-005	23130-134	23130-135	23130-136	–	23130-378	23130-074
38	47	2200	800	800	23130-006					23130-353	23130-134
39	47	2200	800	900	23130-007					23130-354	23130-374
40	47	2200	800	1000	23130-008					23130-355	23130-375
41	47	2200	800	1100	23130-360					23130-356	23130-376
42	47	2200	800	1200	23130-361					23130-357	23130-377

RAL 7021 Bases/plinths

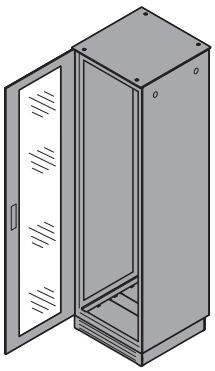

Completely in RAL 7021 (black grey)

					Base/plinth			Base/plinth, mobile	
					Base/plinth, ventilated	Side trim	Tilt protection, extractable	Base/plinth, mobile	Tilt protection, extractable
					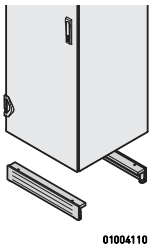 01004110 support with adjustable feet and 2 trims, perforated, static load-carrying capacity 1000 kg; please order side trims separately	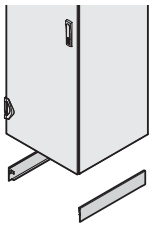 01004053 St, 1.5 mm	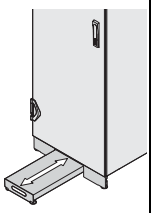 01006055 St, 2 mm, for retrofitting to the base, incl. cover strip	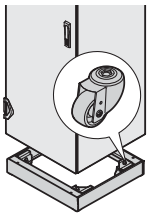 01004111 support, St, 3 mm, trim, St, 1.5 mm, static load-carrying capacity on castors 400 kg, on adjustable feet 1000 kg	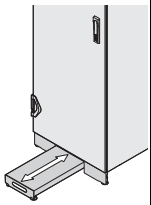 01006055 St, 2 mm, for retrofitting to the base, incl. cover strip
	Cabinet dimensions				RAL 7021	RAL 7021	RAL 7021	RAL 7021	RAL 7021
No.	Height U	Height mm	Width mm	Depth mm	PU 1 kit assembled	PU 1 pair assembled	1 piece assembled	1 piece assembled	1 piece assembled
1	24	1200	600	600	23130-187	23130-169	–	23130-208	–
2	24	1200	600	800		23130-170	–	23130-209	–
3	24	1200	600	900		23130-171	23130-345	23130-210	23130-345
4	24	1200	600	1000		23130-172	23130-346	23130-211	23130-346
5	24	1200	600	1100		23130-362	23130-347	23130-368	23130-347
6	24	1200	600	1200		23130-363	23130-348	23130-369	23130-348
7	24	1200	800	600	23130-194	23130-169	–	23130-212	–
8	24	1200	800	800		23130-170	–	23130-213	–
9	24	1200	800	900		23130-171	23130-349	23130-214	23130-349
10	24	1200	800	1000		23130-172	23130-350	23130-215	23130-350
11	29	1400	600	600	23130-187	23130-169	–	23130-208	–
12	29	1400	600	800		23130-170		23130-209	
13	29	1400	800	600	23130-194	23130-169	–	23130-212	–
14	29	1400	800	800		23130-170		23130-213	
15	38	1800	600	600	23130-187	23130-169	–	23130-208	–
16	38	1800	600	800		23130-170		23130-209	
17	38	1800	800	600	23130-194	23130-169	–	23130-212	–
18	38	1800	800	800		23130-170		23130-213	
19	42	2000	600	600	23130-187	23130-169	–	23130-208	–
20	42	2000	600	800		23130-170	–	23130-209	–
21	42	2000	600	900		23130-171	23130-345	23130-210	23130-345
22	42	2000	600	1000		23130-172	23130-346	23130-211	23130-346
23	42	2000	600	1100		23130-362	23130-347	23130-368	23130-347
24	42	2000	600	1200		23130-363	23130-348	23130-369	23130-348
25	42	2000	800	600	23130-194	23130-169	–	23130-212	–
26	42	2000	800	800		23130-170	–	23130-213	–
27	42	2000	800	900		23130-171	23130-349	23130-214	23130-349
28	42	2000	800	1000		23130-172	23130-350	23130-215	23130-350
29	42	2000	800	1100		23130-362	23130-351	23130-370	23130-351
30	42	2000	800	1200		23130-363	23130-352	23130-371	23130-352
31	47	2200	600	600	23130-187	23130-169	–	23130-208	–
32	47	2200	600	800		23130-170	–	23130-209	–
33	47	2200	600	900		23130-171	23130-345	23130-210	23130-345
34	47	2200	600	1000		23130-172	23130-346	23130-211	23130-346
35	47	2200	600	1100		23130-362	23130-347	23130-368	23130-347
36	47	2200	600	1200		23130-363	23130-348	23130-369	23130-348
37	47	2200	800	600	23130-194	23130-169	–	23130-212	–
38	47	2200	800	800		23130-170	–	23130-213	–
39	47	2200	800	900		23130-171	23130-349	23130-214	23130-349
40	47	2200	800	1000		23130-172	23130-350	23130-215	23130-350
41	47	2200	800	1100		23130-362	23130-351	23130-370	23130-351
42	47	2200	800	1200		23130-363	23130-352	23130-371	23130-352

Cabinets – VARISTAR Datacom/Networking

RAL 7021 19" panel/slide mounts

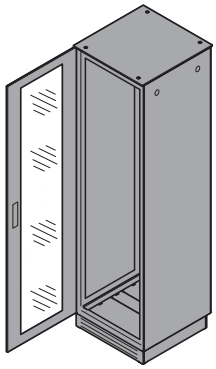

Completely in RAL 7021 (black grey)

Cabinet dimensions

Dimension Standard fitting

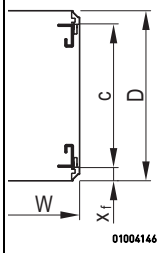

01004146

x_f = distance from front
c = pitch of 19" panel/slide mounts
D = cabinet depth
W = cabinet width

19" panel/slide mounts EIA

Painted RAL 7021

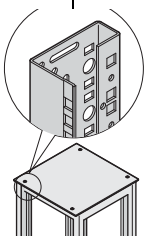

01004112

St, 1.75 mm; reduced-width adaptor bracket required for 800 mm width; depth members are required for partial-height mounting

AlZn

U height identification for 19" panel/slide mounts

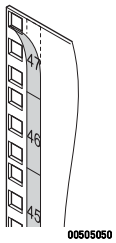

00505050

paper strip, white, serial numbered from 1 ... 47 U

19" assembly kit M6

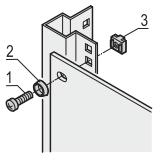

sc128

assembly kit: item 1: screws, item 2: cage nuts, item 3: washers

No.	Height U	Height mm	Width mm	Depth mm	x_f mm	c mm	RAL 7021 PU 1 pair assembled	PU 1 pair assembled	PU 4 pieces assembled	PU 50 pieces supplied loose
1	24	1200	600	600	50	500	23130-021	23130-031	25127-997	21101-809
2	24	1200	600	800	150	500				
3	24	1200	600	900	70	740				
4	24	1200	600	1000	70	740				
5	24	1200	600	1100	70	740				
6	24	1200	600	1200	70	740				
7	24	1200	800	600	50	500	23130-021	23130-031	25127-997	21101-809
8	24	1200	800	800	150	500				
9	24	1200	800	900	70	740				
10	24	1200	800	1000	70	740				
11	29	1400	600	600	50	500	23130-022	23130-032	25127-997	21101-809
12	29	1400	600	800	150	500				
13	29	1400	800	600	50	500	23130-022	23130-032	25127-997	21101-809
14	29	1400	800	800	150	500				
15	38	1800	600	600	50	500	23130-024	23130-034	25127-997	21101-809
16	38	1800	600	800	150	500				
17	38	1800	800	600	50	500	23130-024	23130-034	25127-997	21101-809
18	38	1800	800	800	150	500				
19	42	2000	600	600	50	500	23130-025	23130-035	25127-997	21101-809
20	42	2000	600	800	150	500				
21	42	2000	600	900	70	740				
22	42	2000	600	1000	70	740				
23	42	2000	600	1100	70	740				
24	42	2000	600	1200	70	740				
25	42	2000	800	600	50	500	23130-025	23130-035	25127-997	21101-809
26	42	2000	800	800	150	500				
27	42	2000	800	900	70	740				
28	42	2000	800	1000	70	740				
29	42	2000	800	1100	70	740				
30	42	2000	800	1200	70	740				
31	47	2200	600	600	50	500	23130-026	23130-036	25127-997	21101-809
32	47	2200	600	800	150	500				
33	47	2200	600	900	70	740				
34	47	2200	600	1000	70	740				
35	47	2200	600	1100	70	740				
36	47	2200	600	1200	70	740				
37	47	2200	800	600	50	500	23130-026	23130-036	25127-997	21101-809
38	47	2200	800	800	150	500				
39	47	2200	800	900	70	740				
40	47	2200	800	1000	70	740				
41	47	2200	800	1100	70	740				
42	47	2200	800	1200	70	740				

RAL 7021 Adapter bracket for reduced width, depth member, cross member

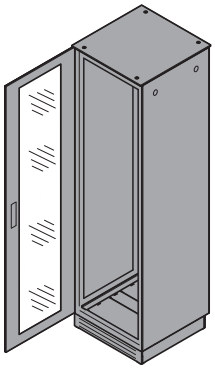

All RAL 7021 (black grey) RAL 7035 (light grey) on request

Cabinet dimensions

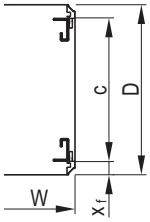

01004146

x_f = distance from front
c = pitch of 19" panel/slide mounts
D = cabinet depth
W = cabinet width

Dimension Standard fitting

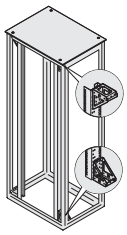

01004128

St, 2 mm, finish AlZn, for fixing the 19" panel/slide mounts in 800 mm wide cabinets

Adapter bracket for reduced width

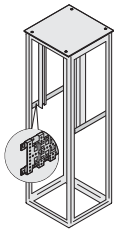

01004056

St, 1.5 mm, finish AlZn; only required for partial-height mounting

Depth member, 3 rows

01004056

St, 2.5 mm

Heavy-load cross member

No.	Height U	Height mm	Width mm	Depth mm	x_f mm	C mm	PU 4 pieces assembled	PU 1 pair assembled	PU 4 pieces fitted
1	24	1200	600	600	50	500	–	23130-081	–
2	24	1200	600	800	150	500		23130-082	
3	24	1200	600	900	70	740		23130-083	
4	24	1200	600	1000	70	740		23130-084	
5	24	1200	600	1100	70	740		23130-364	
6	24	1200	600	1200	70	740		23130-365	
7	24	1200	800	600	50	500	23130-091	23130-081	–
8	24	1200	800	800	150	500		23130-082	–
9	24	1200	800	900	70	740		23130-083	–
10	24	1200	800	1000	70	740		23130-084	23130-544
11	29	1400	600	600	50	500	–	23130-081	–
12	29	1400	600	800	150	500		23130-082	
13	29	1400	800	600	50	500	23130-091	23130-081	–
14	29	1400	800	800	150	500		23130-082	
15	38	1800	600	600	50	500	–	23130-081	–
16	38	1800	600	800	150	500		23130-082	
17	38	1800	800	600	50	500	23130-091	23130-081	–
18	38	1800	800	800	150	500		23130-082	
19	42	2000	600	600	50	500	–	23130-081	–
20	42	2000	600	800	150	500		23130-082	
21	42	2000	600	900	70	740		23130-083	
22	42	2000	600	1000	70	740		23130-084	
23	42	2000	600	1100	70	740		23130-364	
24	42	2000	600	1200	70	740		23130-365	
25	42	2000	800	600	50	500	23130-091	23130-081	–
26	42	2000	800	800	150	500		23130-082	–
27	42	2000	800	900	70	740		23130-083	–
28	42	2000	800	1000	70	740		23130-084	23130-544
29	42	2000	800	1100	70	740		23130-364	23130-545
30	42	2000	800	1200	70	740		23130-365	23130-546
31	47	2200	600	600	50	500	–	23130-081	–
32	47	2200	600	800	150	500		23130-082	
33	47	2200	600	900	70	740		23130-083	
34	47	2200	600	1000	70	740		23130-084	
35	47	2200	600	1100	70	740		23130-364	
36	47	2200	600	1200	70	740		23130-365	
37	47	2200	800	600	50	500	23130-091	23130-081	–
38	47	2200	800	800	150	500		23130-082	–
39	47	2200	800	900	70	740		23130-083	–
40	47	2200	800	1000	70	740		23130-084	23130-544
41	47	2200	800	1100	70	740		23130-364	23130-545
42	47	2200	800	1200	70	740		23130-365	23130-546

Cabinets – VARISTAR Datacom/Networking

RAL 7021 Swing frames

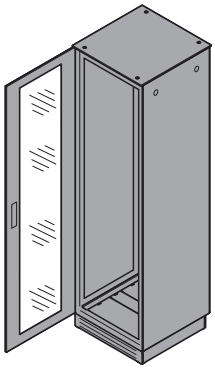

Completely in RAL 7021 (black grey)

	Cabinet dimensions				Swing frame	Stop 120°	Swing frame trim		Door opening 160°		Safety lock
							Asymmetrical assembly	Symmetrical assembly	Hinge 160°	Stop 160°	
	Height		Width	Depth							
No.	U	mm	mm	mm	RAL 7021 1 piece assembled	RAL 7021 PU 1 kit assembled	RAL 7021 1 piece assembled	RAL 7021 PU 2 pieces assembled	PU 2 pieces assembled	RAL 7021 PU 1 kit assembled	1 piece assembled
					01005070	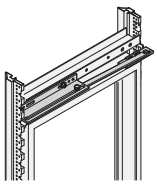 01005061	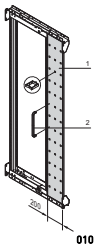 01005058	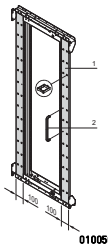 01005057		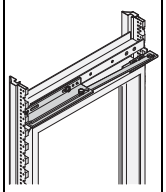 01005061	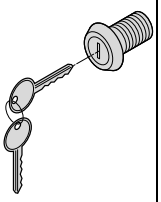 41001517
					St, 2 mm, RAL 7021, load-carrying capacity: 150 kg, 120° hinge, square locks incl. 2 keys	St; for safety reasons a swing frame stop is recommended	St, 1.5 mm, RAL 7021, trim (item 1, 2 x width 100 mm) incl. handle (item 2) and cut-out for cable eyes	St, 1.5 mm, RAL 7021, trim (item 1, 2 x width 100 mm) incl. handle (item 2) and cut-out for cable eyes	is screwed to the swing frame in place of the 120° hinge	St, usable only in connection with 160° hinge, swing frame stop is recommended for safety reasons	for swing frame, instead of square lock, incl. 2 keys
1	24	1200	600	600	21130-413	23130-158	–	–	23130-160	23130-159	60113-267
2	24	1200	600	800							
3	24	1200	600	900							
4	24	1200	600	1000							
5	24	1200	600	1100							
6	24	1200	600	1200							
7	24	1200	800	600	21130-423	23130-158	21130-432	21130-442	23130-160	23130-159	60113-267
8	24	1200	800	800							
9	24	1200	800	900							
10	24	1200	800	1000							
11	29	1400	600	600	21130-414	23130-158	–	–	23130-160	23130-159	60113-267
12	29	1400	600	800							
13	29	1400	800	600	21130-424	23130-158	21130-433	21130-443	23130-160	23130-159	60113-267
14	29	1400	800	800							
15	38	1800	600	600	21130-416	23130-158	–	–	23130-160	23130-159	60113-267
16	38	1800	600	800							
17	38	1800	800	600	21130-426	23130-158	21130-435	21130-445	23130-160	23130-159	60113-267
18	38	1800	800	800							
19	42	2000	600	600	21130-417	23130-158	–	–	23130-160	23130-159	60113-267
20	42	2000	600	800							
21	42	2000	600	900							
22	42	2000	600	1000							
23	42	2000	600	1100							
24	42	2000	600	1200							
25	42	2000	800	600	21130-427	23130-158	21130-436	21130-446	23130-160	23130-159	60113-267
26	42	2000	800	800							
27	42	2000	800	900							
28	42	2000	800	1000							
29	42	2000	800	1100							
30	42	2000	800	1200							
31	47	2200	600	600	21130-418	23130-158	–	–	23130-160	23130-159	60113-267
32	47	2200	600	800							
33	47	2200	600	900							
34	47	2200	600	1000							
35	47	2200	600	1100							
36	47	2200	600	1200							
37	47	2200	800	600	21130-428	23130-158	21130-437	21130-447	23130-160	23130-159	60113-267
38	47	2200	800	800							
39	47	2200	800	900							
40	47	2200	800	1000							
41	47	2200	800	1100							
42	47	2200	800	1200							

RAL 7021 Fixed shelves

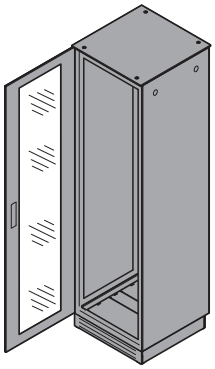

Completely in RAL 7021 (black grey)

					Stationary shelf		
					Full depth	Shortened by 100 mm	Depth member, 3 rows
					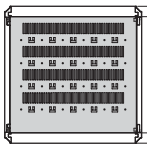 01004142	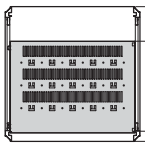 01004142	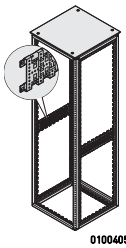 01004056
					St, 1.5 mm, static load-carrying capacity 75 kg, 1 U, incl. GND/ earthing	St, 1.5 mm, static load-carrying capacity 75 kg, 1 U, depth 479 mm, incl. GND/ earthing, for recessed installation order depth members separately	length 660 mm, St, 1.5 mm, finish AlZn, required for recessed shelf
	Cabinet dimensions				RAL 7021	RAL 7021	AlZn
No.	Height U	mm	Width mm	Depth mm	1 piece assembled	1 piece assembled	PU 1 pair assembled
1	24	1200	600	600	21130-323	21130-322	23130-081
2	24	1200	600	800	21130-335	21130-324	23130-082
3	24	1200	600	900	21130-336	–	23130-083
4	24	1200	600	1000	21130-327	–	23130-084
5	24	1200	600	1100	21130-550	–	23130-364
6	24	1200	600	1200	21130-551	–	23130-365
7	24	1200	800	600	21130-333	21130-322	23130-081
8	24	1200	800	800	21130-335	21130-324	23130-082
9	24	1200	800	900	21130-336	–	23130-083
10	24	1200	800	1000	21130-337	–	23130-084
11	29	1400	600	600	21130-323	21130-322	23130-081
12	29	1400	600	800	21130-325	21130-324	23130-082
13	29	1400	800	600	21130-333	21130-322	23130-081
14	29	1400	800	800	21130-335	21130-324	23130-082
15	38	1800	600	600	21130-323	21130-322	23130-081
16	38	1800	600	800	21130-325	21130-324	23130-082
17	38	1800	800	600	21130-333	21130-322	23130-081
18	38	1800	800	800	21130-335	21130-324	23130-082
19	42	2000	600	600	21130-323	21130-322	23130-081
20	42	2000	600	800	21130-325	21130-324	23130-082
21	42	2000	600	900	21130-326	–	23130-083
22	42	2000	600	1000	21130-327	–	23130-084
23	42	2000	600	1100	21130-550	–	23130-364
24	42	2000	600	1200	21130-551	–	23130-365
25	42	2000	800	600	21130-333	21130-322	23130-081
26	42	2000	800	800	21130-335	21130-324	23130-082
27	42	2000	800	900	21130-336	–	23130-083
28	42	2000	800	1000	21130-337	–	23130-084
29	42	2000	800	1100	21130-552	–	23130-364
30	42	2000	800	1200	21130-553	–	23130-365
31	47	2200	600	600	21130-323	21130-322	23130-081
32	47	2200	600	800	21130-325	21130-324	23130-082
33	47	2200	600	900	21130-326	–	23130-083
34	47	2200	600	1000	21130-327	–	23130-084
35	47	2200	600	1100	21130-550	–	23130-364
36	47	2200	600	1200	21130-551	–	23130-365
37	47	2200	800	600	21130-333	21130-322	23130-081
38	47	2200	800	800	21130-335	21130-324	23130-082
39	47	2200	800	900	21130-336	–	23130-083
40	47	2200	800	1000	21130-337	–	23130-084
41	47	2200	800	1100	21130-552	–	23130-364
42	47	2200	800	1200	21130-553	–	23130-365

Cabinets – VARISTAR Datacom/Networking

RAL 7021 Telescopic shelves

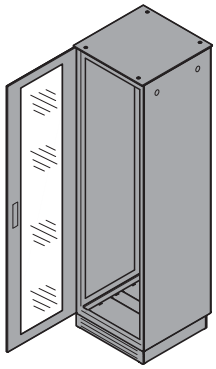

Completely in RAL 7021 (black grey)

	Cabinet dimensions				Telescopic shelf, 2 U				
					Full depth	Shortened by 100 mm	Mounting bracket	T-bar lock	GND/earthing
					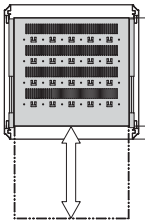 01004144	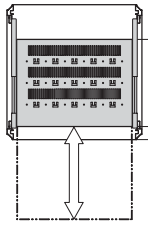 01004145	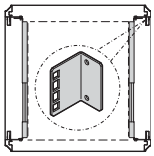 01005054	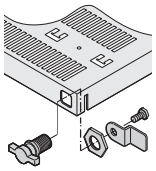 01004125	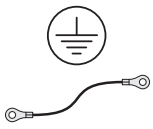 05904052
					St, 1.5 mm, static load-carrying capacity 70/50 kg (width 600/ 800 mm), incl. telescopic slide, please order mounting bracket separately	St, 1.5 mm, static load-carrying capacity 70/50 kg (width 600/ 800 mm), incl. telescopic slide, please order mounting bracket separately	St, finish AlZn	to lock the telescopic shelf	for telescopic shelf
					RAL 7021	RAL 7021			
No.	Height U	Height mm	Width mm	Depth mm	1 piece assembled	1 piece assembled	PU 4 pieces assembled	1 piece assembled	1 piece assembled
1	24	1200	600	600	21130-353	21130-352	23130-274	23130-092	23130-140
2	24	1200	600	800	21130-355	21130-354			
3	24	1200	600	900	–	–			
4	24	1200	600	1000	–	–			
5	24	1200	600	1100	–	–			
6	24	1200	600	1200	–	–			
7	24	1200	800	600	21130-373	21130-372	23130-274	23130-092	23130-140
8	24	1200	800	800	21130-375	21130-374			
9	24	1200	800	900	–	–			
10	24	1200	800	1000	–	–			
11	29	1400	600	600	21130-353	21130-352	23130-274	23130-092	23130-140
12	29	1400	600	800	21130-355	21130-354			
13	29	1400	800	600	21130-373	21130-372	23130-274	23130-092	23130-140
14	29	1400	800	800	21130-375	21130-374			
15	38	1800	600	600	21130-353	21130-352	23130-274	23130-092	23130-140
16	38	1800	600	800	21130-355	21130-354			
17	38	1800	800	600	21130-373	21130-372	23130-274	23130-092	23130-140
18	38	1800	800	800	21130-375	21130-374			
19	42	2000	600	600	21130-353	21130-352	23130-274	23130-092	23130-140
20	42	2000	600	800	21130-355	21130-354			
21	42	2000	600	900	–	–			
22	42	2000	600	1000	–	–			
23	42	2000	600	1100	–	–			
24	42	2000	600	1200	–	–			
25	42	2000	800	600	21130-373	21130-372	23130-274	23130-092	23130-140
26	42	2000	800	800	21130-375	21130-374			
27	42	2000	800	900	–	–			
28	42	2000	800	1000	–	–			
29	42	2000	800	1100	–	–			
30	42	2000	800	1200	–	–			
31	47	2200	600	600	21130-353	21130-352	23130-274	23130-092	23130-140
32	47	2200	600	800	21130-355	21130-354			
33	47	2200	600	900	–	–			
34	47	2200	600	1000	–	–			
35	47	2200	600	1100	–	–			
36	47	2200	600	1200	–	–			
37	47	2200	800	600	21130-373	21130-372	23130-274	23130-092	23130-140
38	47	2200	800	800	21130-375	21130-374			
39	47	2200	800	900	–	–			
40	47	2200	800	1000	–	–			
41	47	2200	800	1100	–	–			
42	47	2200	800	1200	–	–			

RAL 7021 19" shelves, fixed or telescopic, 1 U

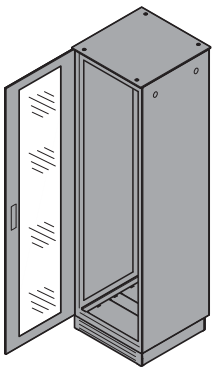

Completely in RAL 7021 (black grey)

Cabinet dimensions

No.	Height U	Height mm	Width mm	Depth mm	x_f mm	c mm	19" stationary shelf, 1 U, 75 kg: Full depth RAL 7021 1 piece assembled	19" stationary shelf, 1 U, 75 kg: Shortened by 100 mm RAL 7021 1 piece assembled	19" telescopic shelf, 1 U, 30 kg: Full depth RAL 7021 1 piece assembled	19" telescopic shelf, 1 U, 30 kg: Shortened by 100 mm RAL 7021 1 piece assembled	GND/earthing PU 1 kit assembled
1	24	1200	600	600	50	500	21130-303	21130-302	21130-343	21130-342	23130-140
2	24	1200	600	800	150	500	21130-303	21130-302	21130-343	21130-342	23130-140
3	24	1200	600	900	70	740	21130-309	–	–	–	–
4	24	1200	600	1000	70	740	21130-309	–	–	–	–
5	24	1200	600	1100	70	740	21130-309	–	–	–	–
6	24	1200	600	1200	70	740	21130-309	–	–	–	–
7	24	1200	800	600	50	500	21130-303	21130-302	21130-343	21130-342	23130-140
8	24	1200	800	800	150	500	21130-303	21130-302	21130-343	21130-342	23130-140
9	24	1200	800	900	70	740	21130-309	–	–	–	–
10	24	1200	800	1000	70	740	21130-309	–	–	–	–
11	29	1400	600	600	50	500	21130-303	21130-302	21130-343	21130-342	23130-140
12	29	1400	600	800	150	500	21130-303	21130-302	21130-343	21130-342	23130-140
13	29	1400	800	600	50	500	21130-303	21130-302	21130-343	21130-342	23130-140
14	29	1400	800	800	150	500	21130-303	21130-302	21130-343	21130-342	23130-140
15	38	1800	600	600	50	500	21130-303	21130-302	21130-343	21130-342	23130-140
16	38	1800	600	800	150	500	21130-303	21130-302	21130-343	21130-342	23130-140
17	38	1800	800	600	50	500	21130-303	21130-302	21130-343	21130-342	23130-140
18	38	1800	800	800	150	500	21130-303	21130-302	21130-343	21130-342	23130-140
19	42	2000	600	600	50	500	21130-303	21130-302	21130-343	21130-342	23130-140
20	42	2000	600	800	150	500	21130-303	21130-302	21130-343	21130-342	23130-140
21	42	2000	600	900	70	740	21130-309	–	–	–	–
22	42	2000	600	1000	70	740	21130-309	–	–	–	–
23	42	2000	600	1100	70	740	21130-309	–	–	–	–
24	42	2000	600	1200	70	740	21130-309	–	–	–	–
25	42	2000	800	600	50	500	21130-303	21130-302	21130-343	21130-342	23130-140
26	42	2000	800	800	150	500	21130-303	21130-302	21130-343	21130-342	23130-140
27	42	2000	800	900	70	740	21130-309	–	–	–	–
28	42	2000	800	1000	70	740	21130-309	–	–	–	–
29	42	2000	800	1100	70	740	21130-309	–	–	–	–
30	42	2000	800	1200	70	740	21130-309	–	–	–	–
31	47	2200	600	600	50	500	21130-303	21130-302	21130-343	21130-342	23130-140
32	47	2200	600	800	150	500	21130-303	21130-302	21130-343	21130-342	23130-140
33	47	2200	600	900	70	740	21130-309	–	–	–	–
34	47	2200	600	1000	70	740	21130-309	–	–	–	–
35	47	2200	600	1100	70	740	21130-309	–	–	–	–
36	47	2200	600	1200	70	740	21130-309	–	–	–	–
37	47	2200	800	600	50	500	21130-303	21130-302	21130-343	21130-342	23130-140
38	47	2200	800	800	150	500	21130-303	21130-302	21130-343	21130-342	23130-140
39	47	2200	800	900	70	740	21130-309	–	–	–	–
40	47	2200	800	1000	70	740	21130-309	–	–	–	–
41	47	2200	800	1100	70	740	21130-309	–	–	–	–
42	47	2200	800	1200	70	740	21130-309	–	–	–	–

Dimension Standard fitting

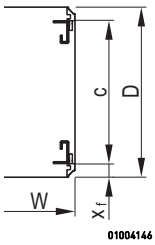

01004146

x_f = distance from front
c = pitch of 19" panel/slide mounts
D = cabinet depth
W = cabinet width

19" stationary shelf, 1 U, 75 kg

Full depth

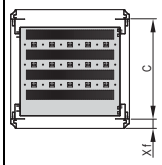

01004118

St, 1.5 mm, static load-carrying capacity 75 kg, depth 600 mm, incl. GND/earthing

Shortened by 100 mm

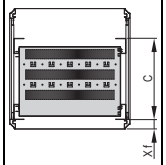

01004119

St, 1.5 mm, static load-carrying capacity 75 kg, depth 500 mm, incl. GND/earthing

19" telescopic shelf, 1 U, 30 kg

Full depth

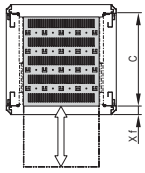

01004123

Shortened by 100 mm

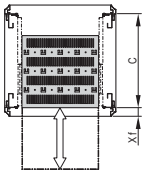

01004122

St, 1.5 mm, static load-carrying capacity 30 kg, incl. telescopic slide; please order GND/earthing kit separately

GND/earthing

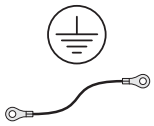

05904052

for telescopic shelf

Cabinets – VARISTAR Datacom/Networking

RAL 7021 19'' telescopic shelves, 2 U

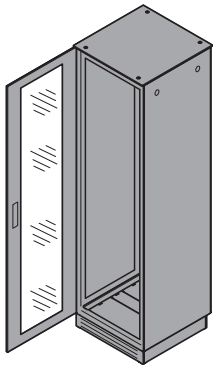

Completely in RAL 7021 (black grey)

	Cabinet dimensions				Dimension		Telescopic shelf, 2 U, 70 kg			GND/earthing
					Standard fitting		Full depth	Shortened by 100 mm	T-bar lock	
					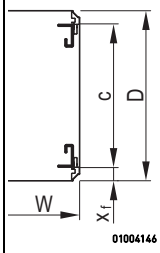		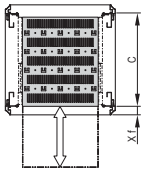	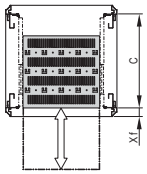	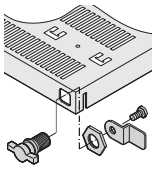	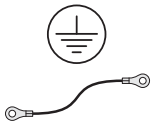
					01004146		01004123	01004122	01004125	05904052
					x_f = distance from front c = pitch of 19" panel/slide mounts D = cabinet depth W = cabinet width		St, 1.5 mm, static load-carrying capacity 70 kg, incl. telescopic slide; Please order T-bar lock and earthing kit separately	St, 1.5 mm, static load-carrying capacity 70 kg, incl. telescopic slide; Please order T-bar lock and earthing kit separately	to lock the telescopic shelf	for telescopic shelf
							RAL 7021	RAL 7021		
No.	Height U	Height mm	Width mm	Depth mm	x_f mm	c mm	1 piece assembled	1 piece assembled	1 piece assembled	PU 1 kit assembled
1	24	1200	600	600	50	500	21130-353	21130-352	23130-092	23130-140
2	24	1200	600	800	150	500	21130-353	21130-352		
3	24	1200	600	900	70	740	–	–		
4	24	1200	600	1000	70	740	–	–		
5	24	1200	600	1100	70	740	–	–		
6	24	1200	600	1200	70	740	–	–		
7	24	1200	800	600	50	500	21130-353	21130-352	23130-092	23130-140
8	24	1200	800	800	150	500	21130-353	21130-352		
9	24	1200	800	900	70	740	–	–	23130-092	23130-140
10	24	1200	800	1000	70	740	–	–		
11	29	1400	600	600	50	500	21130-353	21130-352	23130-092	23130-140
12	29	1400	600	800	150	500	21130-353	21130-352		
13	29	1400	800	600	50	500	21130-353	21130-352	23130-092	23130-140
14	29	1400	800	800	150	500	21130-353	21130-352		
15	38	1800	600	600	50	500	21130-353	21130-352	23130-092	23130-140
16	38	1800	600	800	150	500	21130-353	21130-352		
17	38	1800	800	600	50	500	21130-353	21130-352	23130-092	23130-140
18	38	1800	800	800	150	500	21130-353	21130-352		
19	42	2000	600	600	50	500	21130-353	21130-352	23130-092	23130-140
20	42	2000	600	800	150	500	21130-353	21130-352		
21	42	2000	600	900	70	740	–	–		
22	42	2000	600	1000	70	740	–	–		
23	42	2000	600	1100	70	740	–	–		
24	42	2000	600	1200	70	740	–	–		
25	42	2000	800	600	50	500	21130-353	21130-352	23130-092	23130-140
26	42	2000	800	800	150	500	21130-353	21130-352		
27	42	2000	800	900	70	740	–	–		
28	42	2000	800	1000	70	740	–	–		
29	42	2000	800	1100	70	740	–	–		
30	42	2000	800	1200	70	740	–	–		
31	47	2200	600	600	50	500	21130-353	21130-352	23130-092	23130-140
32	47	2200	600	800	150	500	21130-353	21130-352		
33	47	2200	600	900	70	740	–	–		
34	47	2200	600	1000	70	740	–	–		
35	47	2200	600	1100	70	740	–	–		
36	47	2200	600	1200	70	740	–	–		
37	47	2200	800	600	50	500	21130-353	21130-352	23130-092	23130-140
38	47	2200	800	800	150	500	21130-353	21130-352		
39	47	2200	800	900	70	740	–	–		
40	47	2200	800	1000	70	740	–	–		
41	47	2200	800	1100	70	740	–	–		
42	47	2200	800	1200	70	740	–	–		

RAL 7021 Slide rails

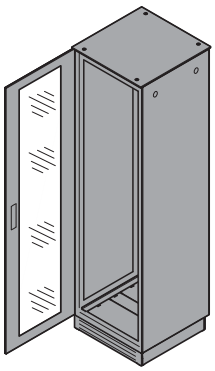

Completely in RAL 7021 (black grey)

Cabinet dimensions

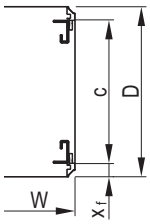

01004146

x_f = distance from front
c = pitch of 19" panel/slide mounts
D = cabinet depth
W = cabinet width

Dimension Standard fitting

Slide rail

25 kg

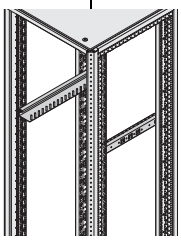

01004056

St, 1.5 mm, finish AlZn, static load-carrying capacity 25 kg/pair

100 kg

St, 2.5 mm, zinc-plated, static load-carrying capacity 100 kg/pair

Short slide rail

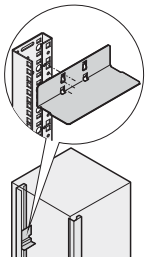

01004154

St, 1.5 mm, finish AlZn, static load-carrying capacity 15 kg/pair

No.	Height U	Height mm	Width mm	Depth mm	x_f mm	c mm	AlZn PU 2 pieces supplied loose	AlZn PU 10 pieces supplied loose	zinc-plated PU 2 pieces supplied loose	zinc-plated PU 10 pieces supplied loose	AlZn PU 2 pieces supplied loose	AlZn PU 10 pieces supplied loose
1	24	1200	600	600	50	500	23130-096	23130-101	23130-118	23130-123	23130-094	23130-095
2	24	1200	600	800	150	500	23130-096	23130-101	23130-118	23130-123		
3	24	1200	600	900	70	740	23130-098	23130-103	23130-120	23130-125		
4	24	1200	600	1000	70	740	23130-098	23130-103	23130-120	23130-125		
5	24	1200	600	1100	70	740	23130-098	23130-103	23130-120	23130-125		
6	24	1200	600	1200	70	740	23130-098	23130-103	23130-120	23130-125		
7	24	1200	800	600	50	500	23130-096	23130-101	23130-118	23130-123	23130-094	23130-095
8	24	1200	800	800	150	500	23130-096	23130-101	23130-118	23130-123		
9	24	1200	800	900	70	740	23130-098	23130-103	23130-120	23130-125		
10	24	1200	800	1000	70	740	23130-098	23130-103	23130-120	23130-125		
11	29	1400	600	600	50	500	23130-096	23130-101	23130-118	23130-123	23130-094	23130-095
12	29	1400	600	800	150	500	23130-096	23130-101	23130-118	23130-123		
13	29	1400	800	600	50	500	23130-096	23130-101	23130-118	23130-123	23130-094	23130-095
14	29	1400	800	800	150	500	23130-096	23130-101	23130-118	23130-123		
15	38	1800	600	600	50	500	23130-096	23130-101	23130-118	23130-123	23130-094	23130-095
16	38	1800	600	800	150	500	23130-096	23130-101	23130-118	23130-123		
17	38	1800	800	600	50	500	23130-096	23130-101	23130-118	23130-123	23130-094	23130-095
18	38	1800	800	800	150	500	23130-096	23130-101	23130-118	23130-123		
19	42	2000	600	600	50	500	23130-096	23130-101	23130-118	23130-123	23130-094	23130-095
20	42	2000	600	800	150	500	23130-096	23130-101	23130-118	23130-123		
21	42	2000	600	900	70	740	23130-098	23130-103	23130-120	23130-125		
22	42	2000	600	1000	70	740	23130-098	23130-103	23130-120	23130-125		
23	42	2000	600	1100	70	740	23130-098	23130-103	23130-120	23130-125		
24	42	2000	600	1200	70	740	23130-098	23130-103	23130-120	23130-125		
25	42	2000	800	600	50	500	23130-096	23130-101	23130-118	23130-123	23130-094	23130-095
26	42	2000	800	800	150	500	23130-096	23130-101	23130-118	23130-123		
27	42	2000	800	900	70	740	23130-098	23130-103	23130-120	23130-125		
28	42	2000	800	1000	70	740	23130-098	23130-103	23130-120	23130-125		
29	42	2000	800	1100	70	740	23130-098	23130-103	23130-120	23130-125		
30	42	2000	800	1200	70	740	23130-098	23130-103	23130-120	23130-125		
31	47	2200	600	600	50	500	23130-096	23130-101	23130-118	23130-123	23130-094	23130-095
32	47	2200	600	800	150	500	23130-096	23130-101	23130-118	23130-123		
33	47	2200	600	900	70	740	23130-098	23130-103	23130-120	23130-125		
34	47	2200	600	1000	70	740	23130-098	23130-103	23130-120	23130-125		
35	47	2200	600	1100	70	740	23130-098	23130-103	23130-120	23130-125		
36	47	2200	600	1200	70	740	23130-098	23130-103	23130-120	23130-125		
37	47	2200	800	600	50	500	23130-096	23130-101	23130-118	23130-123	23130-094	23130-095
38	47	2200	800	800	150	500	23130-096	23130-101	23130-118	23130-123		
39	47	2200	800	900	70	740	23130-098	23130-103	23130-120	23130-125		
40	47	2200	800	1000	70	740	23130-098	23130-103	23130-120	23130-125		
41	47	2200	800	1100	70	740	23130-098	23130-103	23130-120	23130-125		
42	47	2200	800	1200	70	740	23130-098	23130-103	23130-120	23130-125		

Cabinets – VARISTAR Datacom/Networking

RAL 7021 Cable ducting with C-rails, cable support rails

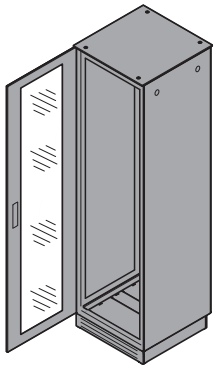

Completely in RAL 7021 (black grey)

	Cable ducting with C-rail					Cable support rail	
	C-rail for cabinet depth	C-rail for cabinet width	Slide nut	Cable shell	Cable retention for C-rail	For cabinet depth	For cabinet width
	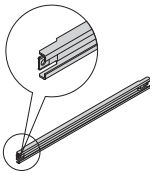 01006109	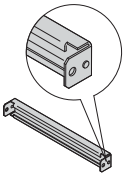 01006107	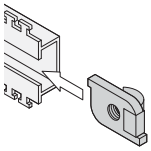 01504054	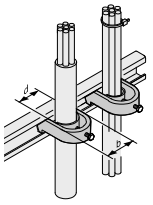 vnt009	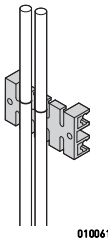 01006110	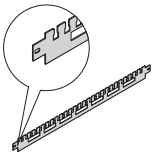 01006108	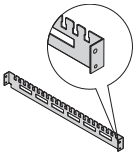 01006106
	St, 1.5 mm, finish AlZn	St, 1.5 mm, finish AlZn	for C-rail	for C-rail or for cable support rail, for cable bundles of 42 ... 46 mm, further dimensions see page 1.162	PA, UL 94 V-0, black, assembly by clipping onto the C-rail	St, 1.5 mm, length **466.4** mm	St, 1.5 mm, finish AlZn
	AlZn	AlZn				RAL 7021	RAL 7021
Cabinet dimensions Height U	Height mm / Width mm / Depth mm						
No.	PU 2 pieces supplied loose	PU 2 pieces supplied loose	PU 10 pieces supplied loose	PU 10 pieces supplied loose	PU 5 pieces supplied loose	PU 2 pieces supplied loose	PU 2 pieces supplied loose
1	24 / 1200 / 600 / 600	23130-086	23130-333	21120-140	20114-731	60118-472	23130-326	21236-093
2	24 / 1200 / 600 / 800	23130-087					23130-328	
3	24 / 1200 / 600 / 900	23130-088					23130-329	
4	24 / 1200 / 600 / 1000	23130-089					23130-330	
5	24 / 1200 / 600 / 1100	23130-366					23130-331	
6	24 / 1200 / 600 / 1200	23130-367					23130-332	
7	24 / 1200 / 800 / 600	23130-086	23130-334	21120-140	20114-731	60118-472	23130-326	23130-312
8	24 / 1200 / 800 / 800	23130-087					23130-328	
9	24 / 1200 / 800 / 900	23130-088					23130-329	
10	24 / 1200 / 800 / 1000	23130-089					23130-330	
11	29 / 1400 / 600 / 600	23130-086	23130-333	21120-140	20114-731	60118-472	23130-326	21236-093
12	29 / 1400 / 600 / 800	23130-087					23130-328	
13	29 / 1400 / 800 / 600	23130-086	23130-334	21120-140	20114-731	60118-472	23130-326	23130-312
14	29 / 1400 / 800 / 800	23130-087					23130-328	
15	38 / 1800 / 600 / 600	23130-086	23130-333	21120-140	20114-731	60118-472	23130-326	21236-093
16	38 / 1800 / 600 / 800	23130-087					23130-328	
17	38 / 1800 / 800 / 600	23130-086	23130-334	21120-140	20114-731	60118-472	23130-326	23130-312
18	38 / 1800 / 800 / 800	23130-087					23130-328	
19	42 / 2000 / 600 / 600	23130-086	23130-333	21120-140	20114-731	60118-472	23130-326	21236-093
20	42 / 2000 / 600 / 800	23130-087					23130-328	
21	42 / 2000 / 600 / 900	23130-088					23130-329	
22	42 / 2000 / 600 / 1000	23130-089					23130-330	
23	42 / 2000 / 600 / 1100	23130-366					23130-331	
24	42 / 2000 / 600 / 1200	23130-367					23130-332	
25	42 / 2000 / 800 / 600	23130-086	23130-334	21120-140	20114-731	60118-472	23130-326	23130-312
26	42 / 2000 / 800 / 800	23130-087					23130-328	
27	42 / 2000 / 800 / 900	23130-088					23130-329	
28	42 / 2000 / 800 / 1000	23130-089					23130-330	
29	42 / 2000 / 800 / 1100	23130-366					23130-331	
30	42 / 2000 / 800 / 1200	23130-367					23130-332	
31	47 / 2200 / 600 / 600	23130-086	23130-333	21120-140	20114-731	60118-472	23130-326	21236-093
32	47 / 2200 / 600 / 800	23130-087					23130-328	
33	47 / 2200 / 600 / 900	23130-088					23130-329	
34	47 / 2200 / 600 / 1000	23130-089					23130-330	
35	47 / 2200 / 600 / 1100	23130-366					23130-331	
36	47 / 2200 / 600 / 1200	23130-367					23130-332	
37	47 / 2200 / 800 / 600	23130-086	23130-334	21120-140	20114-731	60118-472	23130-326	23130-312
38	47 / 2200 / 800 / 800	23130-087					23130-328	
39	47 / 2200 / 800 / 900	23130-088					23130-329	
40	47 / 2200 / 800 / 1000	23130-089					23130-330	
41	47 / 2200 / 800 / 1100	23130-366					23130-331	
42	47 / 2200 / 800 / 1200	23130-367					23130-332	

RAL 7021 Accessories for cabling

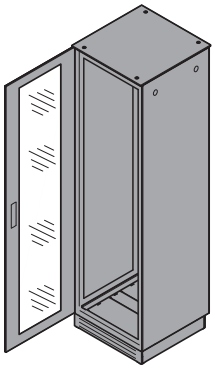

Completely in RAL 7021 (black grey)

Cabinet dimensions

No.	Height U	Height mm	Width mm	Depth mm	Cable bracket: Plastic 31 x 92 mm	Cable bracket: Plastic 100 x 100 mm	Cable bracket: Steel 100 x 100 mm	Cable bracket: Steel 100 x 180 mm
					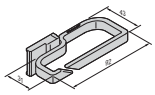 01012085 Plastic, PA6, black; to slot into frame	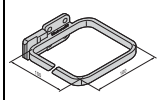 01006079 plastic, PA6, black, to clip onto frame	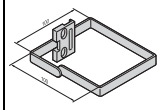 01006081 St, zinc-plated, to screw onto frame or 19" panel/ slide mount	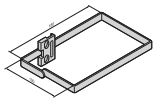 01006098 St, zinc-plated, to screw onto frame or 19" panel/ slide mount
					PU 4 pieces enclosed loose	PU 4 pieces supplied loose	PU 4 pieces supplied loose	PU 4 pieces supplied loose
1	24	1200	600	600	23130-506	–	–	–
2	24	1200	600	800				
3	24	1200	600	900				
4	24	1200	600	1000				
5	24	1200	600	1100				
6	24	1200	600	1200				
7	24	1200	800	600	23130-506	23130-336	23130-341	23130-342
8	24	1200	800	800				
9	24	1200	800	900				
10	24	1200	800	1000				
11	29	1400	600	600	23130-506	–	–	–
12	29	1400	600	800				
13	29	1400	800	600	23130-506	23130-336	23130-341	23130-342
14	29	1400	800	800				
15	38	1800	600	600	23130-506	–	–	–
16	38	1800	600	800				
17	38	1800	800	600	23130-506	23130-336	23130-341	23130-342
18	38	1800	800	800				
19	42	2000	600	600	23130-506	–	–	–
20	42	2000	600	800				
21	42	2000	600	900				
22	42	2000	600	1000				
23	42	2000	600	1100				
24	42	2000	600	1200				
25	42	2000	800	600	23130-506	23130-336	23130-341	23130-342
26	42	2000	800	800				
27	42	2000	800	900				
28	42	2000	800	1000				
29	42	2000	800	1100				
30	42	2000	800	1200				
31	47	2200	600	600	23130-506	–	–	–
32	47	2200	600	800				
33	47	2200	600	900				
34	47	2200	600	1000				
35	47	2200	600	1100				
36	47	2200	600	1200				
37	47	2200	800	600	23130-506	23130-336	23130-341	23130-342
38	47	2200	800	800				
39	47	2200	800	900				
40	47	2200	800	1000				
41	47	2200	800	1100				
42	47	2200	800	1200				

Cabinets – VARISTAR Datacom/Networking

RAL 7021 Accessories for cabling

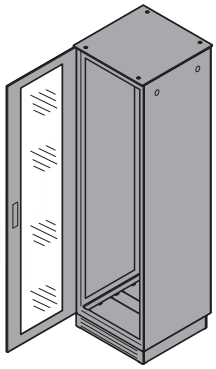

Completely in RAL 7021 (black grey)

Cabinet dimensions

No.	Height U	Height mm	Width mm	Depth mm
1	24	1200	600	600
2	24	1200	600	800
3	24	1200	600	900
4	24	1200	600	1000
5	24	1200	600	1100
6	24	1200	600	1200
7	24	1200	800	600
8	24	1200	800	800
9	24	1200	800	900
10	24	1200	800	1000
11	29	1400	600	600
12	29	1400	600	800
13	29	1400	800	600
14	29	1400	800	800
15	38	1800	600	600
16	38	1800	600	800
17	38	1800	800	600
18	38	1800	800	800
19	42	2000	600	600
20	42	2000	600	800
21	42	2000	600	900
22	42	2000	600	1000
23	42	2000	600	1100
24	42	2000	600	1200
25	42	2000	800	600
26	42	2000	800	800
27	42	2000	800	900
28	42	2000	800	1000
29	42	2000	800	1100
30	42	2000	800	1200
31	47	2200	600	600
32	47	2200	600	800
33	47	2200	600	900
34	47	2200	600	1000
35	47	2200	600	1100
36	47	2200	600	1200
37	47	2200	800	600
38	47	2200	800	800
39	47	2200	800	900
40	47	2200	800	1000
41	47	2200	800	1100
42	47	2200	800	1200

Fibre optic cable bracket

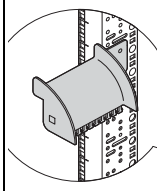

01006074

St, 1.5 mm, finish AlZn

PU 2 pieces supplied loose

No.	
1–6	–
7–10	23130-372
11–12	–
13–14	23130-372
15–16	–
17–18	23130-372
19–24	–
25–30	23130-372
31–36	–
37–42	23130-372

Deposit for excess cable lengths

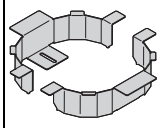

01006113

for assembly on shelf or depth member

PU 2 pieces supplied loose

23130-050

Cable tie

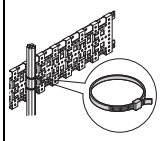

01005078

plastic, 92 mm x 2.5 mm, further dimensions see page 1.162

PU 25 pieces supplied loose

20118-351

Velcro

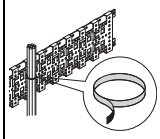

01005079

black, length 300 mm, further dimensions see page 1.162

PU 10 pieces supplied loose

20118-624

Cabinets – VARISTAR Datacom/Networking

configuration

Simple. Fast. To the ideal product.

Components can be varied and combined freely

- Configuration tables from page 1.189
- Online configuration: www.schroff.co.uk/configuration

assembly

Assembled by professionals. Double benefit!

Fitting of all mechanical, electrical and electronic components by our specialists

- Without extra cost
- Ready for despatch within 10 working days

modification

Small changes. Large impact.

Custom drillings, cut-outs and special colours for off-the-shelf products

- Download CAD data and send back with modifications
- Ready for despatch within 10 working days

solution

Simple. Fast. From one source.

Integration and custom developments

- Climate control, complete assembly, cabling (power supply), function test
- Special sizes, customised solutions

academy

Knowledge. Sharing. Partnerships.

Knowledge transfer and partnership

- Seminars, white papers, CAD drawings, test reports, user reports
- Further information: www.varistar.co.uk

lifecycle

We are with you. For the entire product life.

Flexible support throughout the product lifecycle

- Delivery to point of use, installation service, exchange service, replacement parts

Cabinets – VARISTAR Datacom/Networking

Varistar RAL 7021/RAL 7035 ServicePLUS: Configuration and assembly

- Dimensions:
  - Height: 24 ... 47 U (1200 ... 2200 mm)
  - Width: 600 and 800 mm
  - Depth: 600, 800, 900, 1000, 1100 and 1200 mm
- Colour: Frame, top cover, base in black grey (RAL 7021), side panel, door, rear panel in light grey (RAL 7035); differing colours/finishes are indicated
- Build your cabinet out of individual components (please suffix each part number with /05)
- Once you have selected the desired cabinet dimensions, the row number (first column of the configuration tables) will guide you through all subsequent configuration pages that apply to these dimensions (see example below)
- The cabinet is assembled by us and ready for despatch within 10 working days

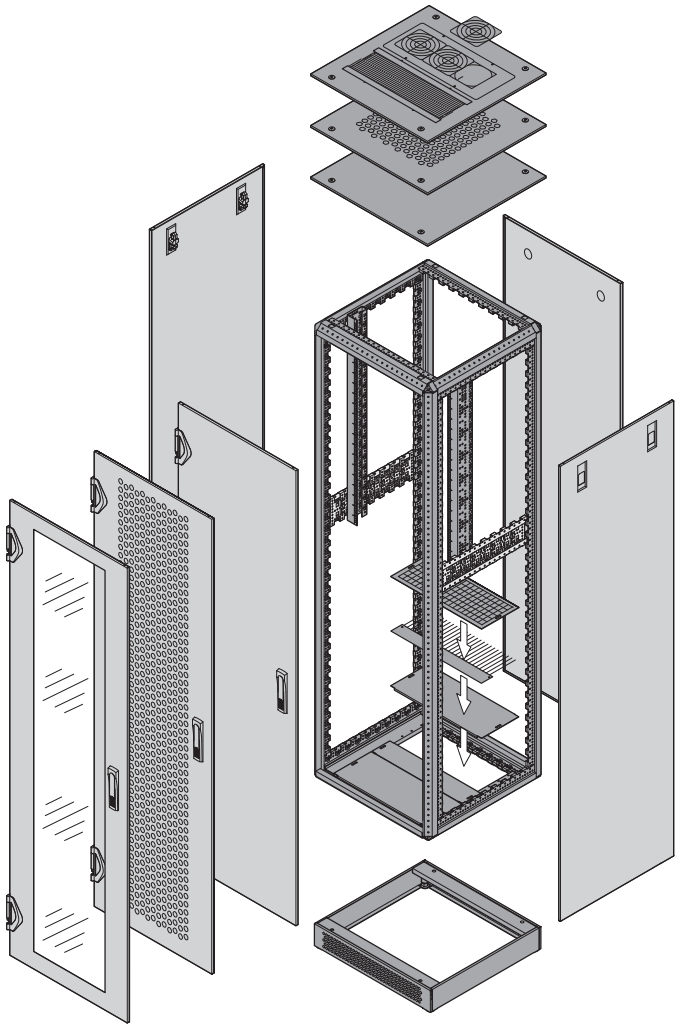

01006114

	Page
Frames, side-by-side mounting kits, adjustable feet, castors	1.190
Side panels, lateral cable ducting	1.191
Decorative frames, glass doors	1.192
Steel doors	1.193
Double doors, cover panels	1.194
Rear panels, connection plates	1.195
Top covers	1.196
Flat top covers with cut-out zones	1.197
Fan top covers	1.198
Base plates	1.199
Bases/plinths	1.200
19" panel/slide mounts	1.201
Swing frames	1.203
Shelves	1.204
19" shelves	1.206
Slide rails	1.208
Cable ducting with C-profiles, cable support rails	1.209
Accessories for cabling	1.210

Example configuration (here: row 20)

Qty	Description	Order no.
1	Frame Slim-Line, height 2000 mm, width 600 mm, depth 800 mm, 1 piece	20130-019/05
1	Side panel with quick release fastener, PU 2 pieces	22130-051/05
2	Safety lock for side panel, PU 4 pieces	23130-132/05
1	Rear panel screw-fixed, 1 piece	22130-069/05
1	Glazed door with single point locking, 1 piece	22130-129/05
1	Adjustable feet, PU 4 pieces	23130-079/05
..	.....	.....

RAL 7021 / RAL 7035 Frames, side-by-side mounting kits, adjustable feet, castors

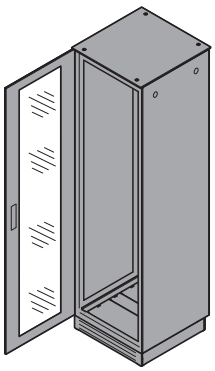

Colour combination RAL 7035 (light grey)/RAL 7021 (black grey)

	Cabinet dimensions				Frame		Side-by-side mounting kit IP 20	Adjustable feet	Castors	
					Slim-Line 400 kg	Heavy-Duty 800 kg			With 2 jacking feet	With adjustable feet
					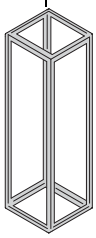 01004078		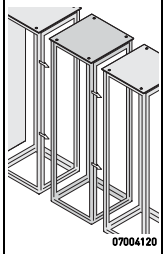 07004120	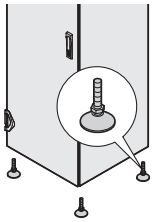 01004081	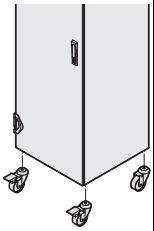 01004082	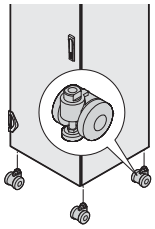 01004156
					static load-carrying capacity: 400 kg, St, 1.5 mm, zinc-plated, with central GND/ earthing point; please order adjustable feet or castors separately	For dynamic load, St, 1.5 mm, zinc-plated, with central GND/ earthing point; please order adjustable feet or castors separately	side-by-side mounting brackets (4 pieces), St	for the frame, static load-carrying capacity: 1000 kg, cannot be used with base/plinth	for the frame, static load-carrying capacity: 400 kg, cannot be used with base/plinth	for the frame, static load-carrying capacity: 400 kg, cannot be used with base/plinth
No.	Height U	mm	Width mm	Depth mm	RAL 7021 1 piece assembled	RAL 7021 1 piece assembled	PU 1 kit supplied loose	PU 4 pieces assembled	PU 4 pieces assembled	PU 4 pieces assembled
1	24	1200	600	600	20130-001	20130-051	23130-061	23130-079	23130-077	23130-078
2	24	1200	600	800	20130-002	20130-052				
3	24	1200	600	900	20130-035	20130-085				
4	24	1200	600	1000	20130-036	20130-086				
5	24	1200	600	1100	20130-578	20130-588				
6	24	1200	600	1200	20130-579	20130-589				
7	24	1200	800	600	20130-003	20130-053	23130-061	23130-079	23130-077	23130-078
8	24	1200	800	800	20130-004	20130-054				
9	24	1200	800	900	20130-037	20130-087				
10	24	1200	800	1000	20130-038	20130-088				
11	29	1400	600	600	20130-005	20130-055	23130-061	23130-079	23130-077	23130-078
12	29	1400	600	800	20130-006	20130-056				
13	29	1400	800	600	20130-007	20130-057	23130-061	23130-079	23130-077	23130-078
14	29	1400	800	800	20130-008	20130-058				
15	38	1800	600	600	20130-013	20130-063	23130-061	23130-079	23130-077	23130-078
16	38	1800	600	800	20130-014	20130-064				
17	38	1800	800	600	20130-015	20130-065	23130-061	23130-079	23130-077	23130-078
18	38	1800	800	800	20130-016	20130-066				
19	42	2000	600	600	20130-018	20130-068	23130-061	23130-079	23130-077	23130-078
20	42	2000	600	800	20130-019	20130-069				
21	42	2000	600	900	20130-020	20130-070				
22	42	2000	600	1000	20130-021	20130-071				
23	42	2000	600	1100	20130-580	20130-590				
24	42	2000	600	1200	20130-581	20130-591				
25	42	2000	800	600	20130-022	20130-072	23130-061	23130-079	23130-077	23130-078
26	42	2000	800	800	20130-023	20130-073				
27	42	2000	800	900	20130-024	20130-074				
28	42	2000	800	1000	20130-025	20130-075				
29	42	2000	800	1100	20130-582	20130-592				
30	42	2000	800	1200	20130-583	20130-593				
31	47	2200	600	600	20130-027	20130-077	23130-061	23130-079	23130-077	23130-078
32	47	2200	600	800	20130-028	20130-078				
33	47	2200	600	900	20130-029	20130-079				
34	47	2200	600	1000	20130-030	20130-080				
35	47	2200	600	1100	20130-584	20130-594				
36	47	2200	600	1200	20130-585	20130-595				
37	47	2200	800	600	20130-031	20130-081	23130-061	23130-079	23130-077	23130-078
38	47	2200	800	800	20130-032	20130-082				
39	47	2200	800	900	20130-033	20130-083				
40	47	2200	800	1000	20130-034	20130-084				
41	47	2200	800	1100	20130-586	20130-596				
42	47	2200	800	1200	20130-587	20130-597				

Cabinets – VARISTAR Datacom/Networking

RAL 7021 / RAL 7035 Side panels, lateral cable ducting

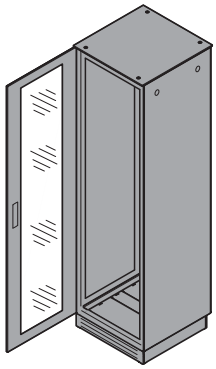

Colour combination RAL 7035 (light grey)/RAL 7021 (black grey)

	Cabinet dimensions				Side panel		Screw-fixed side panel		Lateral cable ducting		
					With quick release fastener	Lock	Side panel	Inside locking	Cable panel Width 150 mm	Cable panel Width 250 mm	Cable ladder Width 300 mm
					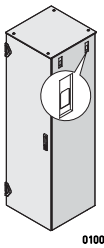 01004084	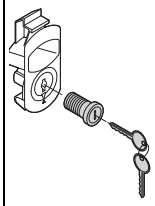 01004072	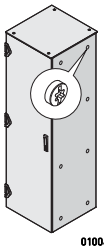 01004083	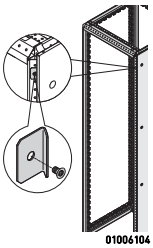 01006104	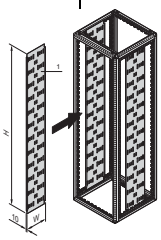 01006103		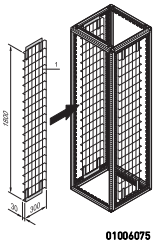 01006075
					St, 1 mm, incl. GND/ earthing, please order lock separately	for quick-release fasteners of one side panel; 4 locks sufficient for 2 side panels	St, 1 mm, incl. GND/ earthing	bracket, St, 1 mm, finish AlZn; with retention screws	St, 1 mm, with cut-outs for cable ties or Velcro see page 1.210		round steel, zinc-plated, height 1800 mm, for cable ties or Velcro see page 1.210
					RAL 7035		RAL 7035		RAL 7021	RAL 7021	
No.	Height U	Height mm	Width mm	Depth mm	PU 2 pieces assembled	PU 4 pieces assembled	PU 2 pieces assembled	PU 2 pieces assembled	PU 2 pieces assembled	PU 2 pieces assembled	PU 2 pieces assembled
1	24	1200	600	600	22130-041	23130-132	22130-001	23130-373	–	–	–
2	24	1200	600	800	22130-042		22130-002				
3	24	1200	600	900	22130-524		22130-516				
4	24	1200	600	1000	22130-525		22130-517				
5	24	1200	600	1100	–		22130-532				
6	24	1200	600	1200	–		22130-533				
7	24	1200	800	600	22130-041	23130-132	22130-001	23130-373	–	–	–
8	24	1200	800	800	22130-042		22130-002				
9	24	1200	800	900	22130-524		22130-516				
10	24	1200	800	1000	22130-525		22130-517				
11	29	1400	600	600	22130-043	23130-132	22130-003	23130-373	–	–	–
12	29	1400	600	800	22130-044		22130-004				
13	29	1400	800	600	22130-043	23130-132	22130-003	23130-373	–	–	–
14	29	1400	800	800	22130-044		22130-004				
15	38	1800	600	600	22130-047	23130-132	22130-007	23130-373	23130-420	23130-149	–
16	38	1800	600	800	22130-048		22130-008				
17	38	1800	800	600	22130-047	23130-132	22130-007	23130-373	23130-420	23130-149	–
18	38	1800	800	800	22130-048		22130-008				
19	42	2000	600	600	22130-050	23130-132	22130-010	23130-373	23130-421	23130-150	23130-554
20	42	2000	600	800	22130-051		22130-011				
21	42	2000	600	900	22130-052		22130-012				
22	42	2000	600	1000	22130-053		22130-013				
23	42	2000	600	1100	–		22130-534				
24	42	2000	600	1200	–		22130-535				
25	42	2000	800	600	22130-050	23130-132	22130-010	23130-373	23130-421	23130-150	23130-554
26	42	2000	800	800	22130-051		22130-011				
27	42	2000	800	900	22130-052		22130-012				
28	42	2000	800	1000	22130-053		22130-013				
29	42	2000	800	1100	–		22130-534				
30	42	2000	800	1200	–		22130-535				
31	47	2200	600	600	22130-055	23130-132	22130-015	23130-373	23130-422	23130-151	23130-555
32	47	2200	600	800	22130-056		22130-516				
33	47	2200	600	900	22130-057		22130-517				
34	47	2200	600	1000	22130-058		22130-018				
35	47	2200	600	1100	–		22130-536				
36	47	2200	600	1200	–		22130-537				
37	47	2200	800	600	22130-055	23130-132	22130-015	23130-373	23130-422	23130-151	23130-555
38	47	2200	800	800	22130-056		22130-516				
39	47	2200	800	900	22130-057		22130-517				
40	47	2200	800	1000	22130-058		22130-018				
41	47	2200	800	1100	–		22130-536				
42	47	2200	800	1200	–		22130-537				

RAL 7021 / RAL 7035 Decorative frames, glass doors

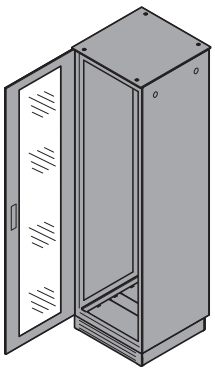

Colour combination RAL 7035 (light grey)/RAL 7021 (black grey)

	Cabinet dimensions				Deco frame		Glazed door		Glazed door	DIN profile half cylinder
					Deco frame	Adaptor bracket	Single point locking	Lever handle	3-point locking	
					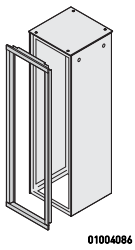 01004086	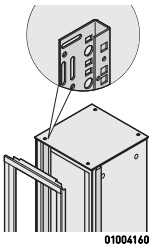 01004160	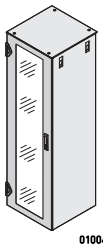 01004088	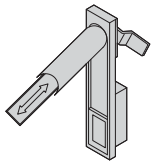 01004147	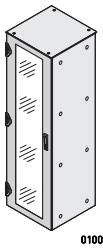 01004091	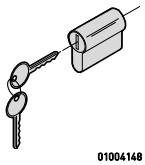 01004148
					Al, 19" plane integrated, front open, incl. GND/ earthing, no door can be fitted	St, 2 mm, for deco frame, for assembly of slide rails and shelves	St, 1.5 mm, Sekurit glass, 6 mm, opening angle 180°, lock cover, incl. GND/ earthing	with push button for doors with single point locking	St, 1.5 mm, Sekurit glass, 6 mm, opening angle 180°, lever handle with push button, incl. GND/ earthing	for lever handle, common locking
					RAL 7035	RAL 7035	RAL 7035		RAL 7035	
No.	Height U	Height mm	Width mm	Depth mm	1 piece assembled	PU 1 pair assembled	1 piece assembled	1 piece assembled	1 piece assembled	1 piece assembled
1	24	1200	600	600	22130-231	23130-230	22130-121	23130-067	22130-181	25127-995
2	24	1200	600	800						
3	24	1200	600	900						
4	24	1200	600	1000						
5	24	1200	600	1100						
6	24	1200	600	1200						
7	24	1200	800	600	–	–	22130-122	23130-067	22130-182	25127-995
8	24	1200	800	800						
9	24	1200	800	900						
10	24	1200	800	1000						
11	29	1400	600	600	22130-232	23130-231	22130-123	23130-067	22130-183	25127-995
12	29	1400	600	800						
13	29	1400	800	600	–	–	22130-124	23130-067	22130-184	25127-995
14	29	1400	800	800						
15	38	1800	600	600	22130-234	23130-233	22130-127	23130-067	22130-187	25127-995
16	38	1800	600	800						
17	38	1800	800	600	–	–	22130-128	23130-067	22130-188	25127-995
18	38	1800	800	800						
19	42	2000	600	600	22130-235	23130-234	22130-129	23130-067	22130-189	25127-995
20	42	2000	600	800						
21	42	2000	600	900						
22	42	2000	600	1000						
23	42	2000	600	1100						
24	42	2000	600	1200						
25	42	2000	800	600	–	–	22130-130	23130-067	22130-190	25127-995
26	42	2000	800	800						
27	42	2000	800	900						
28	42	2000	800	1000						
29	42	2000	800	1100						
30	42	2000	800	1200						
31	47	2200	600	600	22130-236	23130-235	22130-131	23130-067	22130-191	25127-995
32	47	2200	600	800						
33	47	2200	600	900						
34	47	2200	600	1000						
35	47	2200	600	1100						
36	47	2200	600	1200						
37	47	2200	800	600	–	–	22130-132	23130-067	22130-192	25127-995
38	47	2200	800	800						
39	47	2200	800	900						
40	47	2200	800	1000						
41	47	2200	800	1100						
42	47	2200	800	1200						

Cabinets – VARISTAR Datacom/Networking

RAL 7021 / RAL 7035 Steel doors

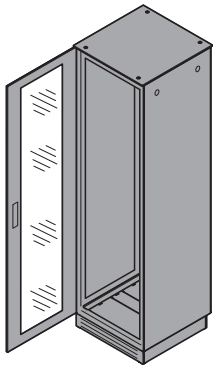

Colour combination RAL 7035 (light grey)/RAL 7021 (black grey)

	Cabinet dimensions				Steel door, single point locking				Steel door, 3-point locking		DIN profile half cylinder
					Plain	Plain, with mounting frame on inner side	Perforated	Lever handle	Plain	Perforated	
					01004089	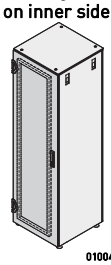 01004089	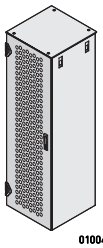 01004090	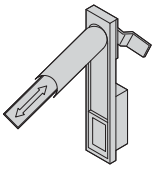 01004147	01004090	01004093	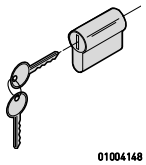 01004148
					St, 1 mm, opening angle 180°, lock cover, incl. GND/ earthing	St, 1,5 mm, opening angle 180°, lock cover, incl. GND/ earthing, designed to carry extensive cut-outs and assemblies	St, 1.5 mm, opening angle 180°, lock cover, incl. GND/ earthing	with push button for doors with single point locking	St, 1.5 mm, opening angle 180°, with mounting frame on inner side, lever handle with push button, incl. GND/ earthing	St, 1.5 mm, opening angle 180°, lever handle with push button, incl. GND/ earthing	for lever handle, common locking
					RAL 7035	RAL 7035	RAL 7035		RAL 7035	RAL 7035	
No.	Height U	Height mm	Width mm	Depth mm	1 piece assembled	1 piece assembled	1 piece assembled	1 piece assembled	1 piece assembled	1 piece assembled	1 piece assembled
1	24	1200	600	600	22130-106	22130-566	22130-136	23130-067	22130-151	21130-700	25127-995
2	24	1200	600	800							
3	24	1200	600	900							
4	24	1200	600	1000							
5	24	1200	600	1100							
6	24	1200	600	1200							
7	24	1200	800	600	22130-107	22130-567	22130-137	23130-067	22130-152	21130-701	25127-995
8	24	1200	800	800							
9	24	1200	800	900							
10	24	1200	800	1000							
11	29	1400	600	600	22130-108	22130-568	22130-138	23130-067	22130-153	21130-702	25127-995
12	29	1400	600	800							
13	29	1400	800	600	22130-109	22130-569	22130-139	23130-067	22130-154	21130-703	25127-995
14	29	1400	800	800							
15	38	1800	600	600	22130-112	22130-572	22130-142	23130-067	22130-157	21130-706	25127-995
16	38	1800	600	800							
17	38	1800	800	600	22130-113	22130-573	22130-143	23130-067	22130-158	21130-707	25127-995
18	38	1800	800	800							
19	42	2000	600	600	22130-114	22130-574	22130-144	23130-067	22130-159	21130-708	25127-995
20	42	2000	600	800							
21	42	2000	600	900							
22	42	2000	600	1000							
23	42	2000	600	1100							
24	42	2000	600	1200							
25	42	2000	800	600	22130-115	22130-575	22130-145	23130-067	22130-160	21130-709	25127-995
26	42	2000	800	800							
27	42	2000	800	900							
28	42	2000	800	1000							
29	42	2000	800	1100							
30	42	2000	800	1200							
31	47	2200	600	600	22130-116	22130-576	22130-146	23130-067	22130-161	21130-710	25127-995
32	47	2200	600	800							
33	47	2200	600	900							
34	47	2200	600	1000							
35	47	2200	600	1100							
36	47	2200	600	1200							
37	47	2200	800	600	22130-117	22130-577	22130-147	23130-067	22130-162	21130-711	25127-995
38	47	2200	800	800							
39	47	2200	800	900							
40	47	2200	800	1000							
41	47	2200	800	1100							
42	47	2200	800	1200							

RAL 7021 / RAL 7035 Double doors, cover panels

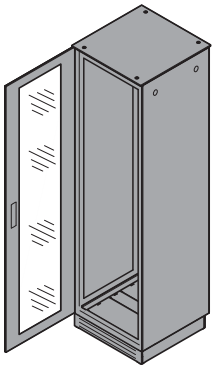

Colour combination RAL 7035 (light grey)/RAL 7021 (black grey)

	Cabinet dimensions				Double door, 3-point locking			DIN profile half cylinder	Cover panel	
					Glazed	Plain	Perforated		Hinged	Brush strip for cover panel
					01005065	01005064	01005066	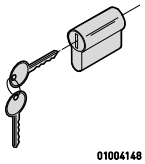 01004148	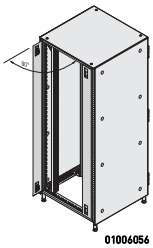 01006056	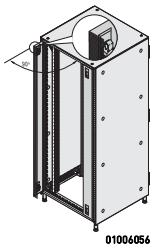 01006056
					frame, St, 1.5 mm, Sekurit glass, 6 mm, opening angle 180°, lever handle with push button, incl. GND/ earthing	St, 1.5 mm, opening angle 180°, lever handle with push button, incl. GND/ earthing	St, 1.5 mm, opening angle 180°, lever handle with push button, incl. GND/ earthing	for lever handle, common locking	St, 1 mm, to cover the cabling space next to the panel/ slide mounts	black
					RAL 7035	RAL 7035	RAL 7035		RAL 7021	
No.	Height U	Height mm	Width mm	Depth mm	1 piece assembled	1 piece assembled	1 piece assembled	1 piece assembled	PU 2 pieces assembled	PU 2 pieces assembled
1	24	1200	600	600	21130-670	21130-657	21130-683	25127-995	–	–
2	24	1200	600	800						
3	24	1200	600	900						
4	24	1200	600	1000						
5	24	1200	600	1100						
6	24	1200	600	1200						
7	24	1200	800	600	21130-671	21130-658	21130-684	25127-995	–	–
8	24	1200	800	800						
9	24	1200	800	900						
10	24	1200	800	1000						
11	29	1400	600	600	21130-672	21130-659	21130-685	25127-995	–	–
12	29	1400	600	800						
13	29	1400	800	600	21130-673	21130-660	21130-686	25127-995	–	–
14	29	1400	800	800						
15	38	1800	600	600	21130-676	21130-663	21130-689	25127-995	–	–
16	38	1800	600	800						
17	38	1800	800	600	21130-677	21130-664	21130-690	25127-995	–	–
18	38	1800	800	800						
19	42	2000	600	600	21130-678	21130-665	21130-691	25127-995	–	–
20	42	2000	600	800						
21	42	2000	600	900						
22	42	2000	600	1000						
23	42	2000	600	1100						
24	42	2000	600	1200						
25	42	2000	800	600	21130-679	21130-666	21130-692	25127-995	23130-343	23130-379
26	42	2000	800	800						
27	42	2000	800	900						
28	42	2000	800	1000						
29	42	2000	800	1100						
30	42	2000	800	1200						
31	47	2200	600	600	21130-680	21130-667	21130-692	25127-995	–	–
32	47	2200	600	800						
33	47	2200	600	900						
34	47	2200	600	1000						
35	47	2200	600	1100						
36	47	2200	600	1200						
37	47	2200	800	600	21130-681	21130-668	21130-694	25127-995	–	–
38	47	2200	800	800						
39	47	2200	800	900						
40	47	2200	800	1000						
41	47	2200	800	1100						
42	47	2200	800	1200						

Cabinets – VARISTAR Datacom/Networking

RAL 7021 / RAL 7035 Rear panels, connection plates

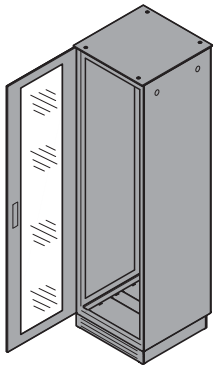

Colour combination RAL 7035 (light grey)/RAL 7021 (black grey)

	Cabinet dimensions				Rear panel		Screw-fixed rear panel	Dimensioning connecting plate door/rear panel	Connecting plate for door and rear panel		
	Height		Width	Depth	With quick release fastener	Lock			Plain	With brush strip	Assembly kit
No.	U	mm	mm	mm	RAL 7035 1 piece assembled	PU 2 pieces assembled	RAL 7035 1 piece assembled	Width mm	RAL 7035 1 piece assembled	RAL 7035 1 piece assembled	PU 1 kit assembled
					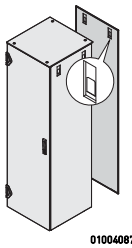 01004087 St, 1 mm, incl. GND/ earthing, please order lock separately	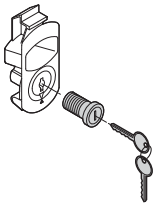 01004072 for quick-release fasteners of rear panel	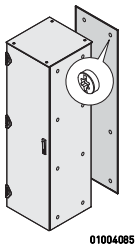 01004085 St, 1 mm, incl. GND/ earthing	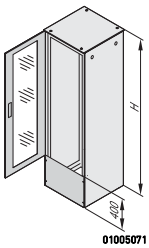 01005071 door and rear panel must be selected 400 mm shorter than the cabinet height; cannot be used with double door	01005063 St, 1 mm, assembly also possible at top, height 400 mm, please order assembly kit separately in conjunction with rear panel	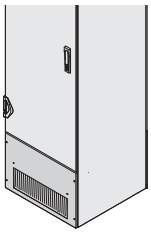 01005069 St, 1 mm, assembly also possible at top, height 400 mm, please order assembly kit separately in conjunction with rear panel	only required if rear panel with quick-release fastener is assembled above the connecting plate
1	24	1200	600	600	22130-091	23130-133	22130-061	–	–	–	–
2	24	1200	600	800							
3	24	1200	600	900							
4	24	1200	600	1000							
5	24	1200	600	1100							
6	24	1200	600	1200							
7	24	1200	800	600	22130-092	23130-133	22130-062	–	–	–	–
8	24	1200	800	800							
9	24	1200	800	900							
10	24	1200	800	1000							
11	29	1400	600	600	22130-093	23130-133	22130-063	–	–	–	–
12	29	1400	600	800							
13	29	1400	800	600	22130-094	23130-133	22130-064	–	–	–	–
14	29	1400	800	800							
15	38	1800	600	600	22130-097	23130-133	22130-067	600	22130-472	22130-478	23130-164
16	38	1800	600	800							
17	38	1800	800	600	22130-098	23130-133	22130-068	800	22130-473	22130-479	23130-164
18	38	1800	800	800							
19	42	2000	600	600	22130-099	23130-133	22130-069	600	22130-472	22130-478	23130-164
20	42	2000	600	800							
21	42	2000	600	900							
22	42	2000	600	1000							
23	42	2000	600	1100							
24	42	2000	600	1200							
25	42	2000	800	600	22130-100	23130-133	22130-070	800	22130-473	22130-479	23130-164
26	42	2000	800	800							
27	42	2000	800	900							
28	42	2000	800	1000							
29	42	2000	800	1100							
30	42	2000	800	1200							
31	47	2200	600	600	22130-101	23130-133	22130-071	600	22130-472	22130-478	23130-164
32	47	2200	600	800							
33	47	2200	600	900							
34	47	2200	600	1000							
35	47	2200	600	1100							
36	47	2200	600	1200							
37	47	2200	800	600	22130-102	23130-133	22130-072	800	22130-473	22130-479	23130-164
38	47	2200	800	800							
39	47	2200	800	900							
40	47	2200	800	1000							
41	47	2200	800	1100							
42	47	2200	800	1200							

RAL 7021 / RAL 7035 Top covers

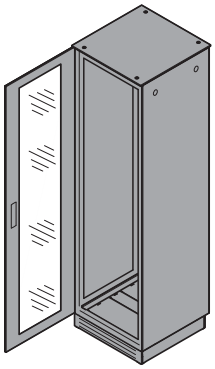

Colour combination RAL 7035 (light grey)/RAL 7021 (black grey)

	Cabinet dimensions				Flat top cover			Flat top cover, raised	
					Plain flat top cover	Perforated	Lifting eye	Spacer	Lifting eye
					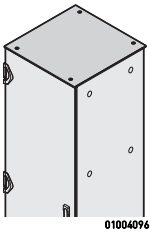 01004096	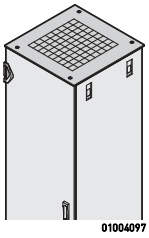 01004097	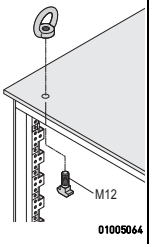 01005064	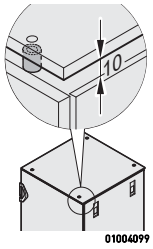 01004099	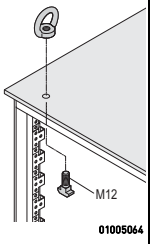 01005064
					St, 1.5 mm, incl. GND/ earthing	St, 1.5 mm, fully perforated, incl. GND/ earthing	for flat top cover, applications and load in accordance with DIN 582	St, zinc-plated, for raising a top cover by 10 mm	for raised flat top cover, applications and load in accordance with DIN 582
No.	Height U	Height mm	Width mm	Depth mm	RAL 7021 1 piece assembled	RAL 7021 1 piece assembled	PU 4 pieces assembled	RAL 7021 PU 4 pieces assembled	PU 4 pieces assembled
1	24	1200	600	600	21130-242	21130-262	23130-072	23130-068	23130-085
2	24	1200	600	800	21130-243	21130-263			
3	24	1200	600	900	21130-244	21130-264			
4	24	1200	600	1000	21130-245	21130-265			
5	24	1200	600	1100	21130-538	21130-546			
6	24	1200	600	1200	21130-539	21130-547			
7	24	1200	800	600	21130-246	21130-266	23130-072	23130-068	23130-085
8	24	1200	800	800	21130-247	21130-267			
9	24	1200	800	900	21130-248	21130-268			
10	24	1200	800	1000	21130-249	21130-269			
11	29	1400	600	600	21130-242	21130-262	23130-072	23130-068	23130-085
12	29	1400	600	800	21130-243	21130-263			
13	29	1400	800	600	21130-246	21130-266	23130-072	23130-068	23130-085
14	29	1400	800	800	21130-247	21130-267			
15	38	1800	600	600	21130-242	21130-262	23130-072	23130-068	23130-085
16	38	1800	600	800	21130-243	21130-263			
17	38	1800	800	600	21130-246	21130-266	23130-072	23130-068	23130-085
18	38	1800	800	800	21130-247	21130-267			
19	42	2000	600	600	21130-242	21130-262	23130-072	23130-068	23130-085
20	42	2000	600	800	21130-243	21130-263			
21	42	2000	600	900	21130-244	21130-264			
22	42	2000	600	1000	21130-245	21130-265			
23	42	2000	600	1100	21130-538	21130-546			
24	42	2000	600	1200	21130-539	21130-547			
25	42	2000	800	600	21130-246	21130-266	23130-072	23130-068	23130-085
26	42	2000	800	800	21130-247	21130-267			
27	42	2000	800	900	21130-248	21130-268			
28	42	2000	800	1000	21130-249	21130-269			
29	42	2000	800	1100	21130-540	21130-548			
30	42	2000	800	1200	21130-541	21130-549			
31	47	2200	600	600	21130-242	21130-262	23130-072	23130-068	23130-085
32	47	2200	600	800	21130-243	21130-263			
33	47	2200	600	900	21130-244	21130-264			
34	47	2200	600	1000	21130-245	21130-265			
35	47	2200	600	1100	21130-538	21130-546			
36	47	2200	600	1200	21130-539	21130-547			
37	47	2200	800	600	21130-246	21130-266	23130-072	23130-068	23130-085
38	47	2200	800	800	21130-247	21130-267			
39	47	2200	800	900	21130-248	21130-268			
40	47	2200	800	1000	21130-249	21130-269			
41	47	2200	800	1100	21130-540	21130-548			
42	47	2200	800	1200	21130-541	21130-549			

Cabinets – VARISTAR Datacom/Networking

RAL 7021 / RAL 7035 Flat top covers with cut-out zones

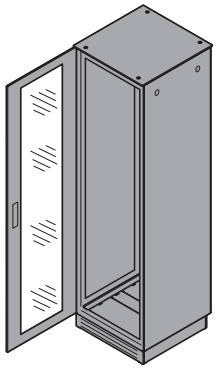

Colour combination RAL 7035 (light grey)/RAL 7021 (black grey)

	Cabinet dimensions				Flat top cover with cable through-ducting openings	Flat top cover with cut-out zones	Top cover assemblies				
							Brush strip	Fan insert	Cover plate for cut-out zones, perforated	Edge protection	Lifting eye
					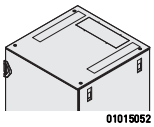 01015052	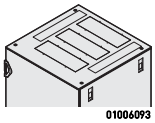 01006093	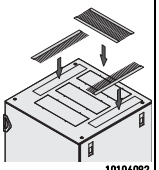 10106092	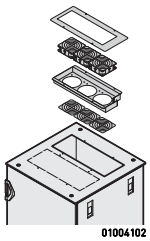 01004102	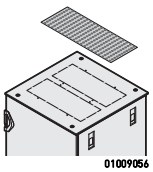 01009056	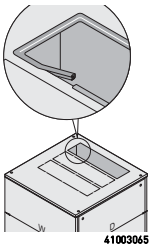 41003065	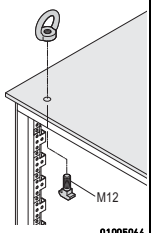 01005064
					St, 1.5 mm, incl. GND/ earthing, cutout size 85 mm x 449 mm	St, 1.5 mm, incl. GND/ earthing, number of cut-outs and dimension drawings see page 1.9	nylon, black, one brush strip covers a lateral cut-out, two brush strips cover a center cut-out	230 V_{AC}, with three fans, 410 m^3/h, completely wired, connecting cable IEC 320	St, 1.5 mm, 6 mm hole diameter, incl. GND/earthing	PVC, 3 m, black, for open cut-out zones	for flat top cover, applications and load in accordance with DIN 582
No.	Height U	mm	Width mm	Depth mm	RAL 7021 1 piece fitted	RAL 7021 1 piece assembled	PU 2 pieces assembled	RAL 7021 1 piece assembled	RAL 7021 1 piece assembled	1 piece enclosed loose	PU 4 pieces assembled
1	24	1200	600	600	–	21130-252	23130-069	23130-070	23130-071	28127-281	23130-072
2	24	1200	600	800	–	21130-253					
3	24	1200	600	900	–	21130-254					
4	24	1200	600	1000	21130-712	21130-255					
5	24	1200	600	1100	21130-713	21130-542					
6	24	1200	600	1200	21130-714	21130-543					
7	24	1200	800	600	–	21130-256	23130-069	23130-070	23130-071	28127-281	23130-072
8	24	1200	800	800	–	21130-257					
9	24	1200	800	900	–	21130-258					
10	24	1200	800	1000	21130-715	21130-259					
11	29	1400	600	600	–	21130-252	23130-069	23130-070	23130-071	28127-281	23130-072
12	29	1400	600	800	–	21130-253					
13	29	1400	800	600	–	21130-256	23130-069	23130-070	23130-071	28127-281	23130-072
14	29	1400	800	800	–	21130-257					
15	38	1800	600	600	–	21130-252	23130-069	23130-070	23130-071	28127-281	23130-072
16	38	1800	600	800	–	21130-253					
17	38	1800	800	600	–	21130-256	23130-069	23130-070	23130-071	28127-281	23130-072
18	38	1800	800	800	–	21130-257					
19	42	2000	600	600	–	21130-252	23130-069	23130-070	23130-071	28127-281	23130-072
20	42	2000	600	800	–	21130-253					
21	42	2000	600	900	–	21130-254					
22	42	2000	600	1000	21130-712	21130-255					
23	42	2000	600	1100	21130-713	21130-542					
24	42	2000	600	1200	21130-714	21130-543					
25	42	2000	800	600	–	21130-256	23130-069	23130-070	23130-071	28127-281	23130-072
26	42	2000	800	800	–	21130-257					
27	42	2000	800	900	–	21130-258					
28	42	2000	800	1000	21130-715	21130-259					
29	42	2000	800	1100	21130-716	21130-544					
30	42	2000	800	1200	21130-717	21130-545					
31	47	2200	600	600	–	21130-252	23130-069	23130-070	23130-071	28127-281	23130-072
32	47	2200	600	800	–	21130-253					
33	47	2200	600	900	–	21130-254					
34	47	2200	600	1000	21130-712	21130-255					
35	47	2200	600	1100	21130-713	21130-542					
36	47	2200	600	1200	21130-714	21130-543					
37	47	2200	800	600	–	21130-256	23130-069	23130-070	23130-071	28127-281	23130-072
38	47	2200	800	800	–	21130-257					
39	47	2200	800	900	–	21130-258					
40	47	2200	800	1000	21130-715	21130-259					
41	47	2200	800	1100	21130-716	21130-544					
42	47	2200	800	1200	21130-717	21130-545					

RAL 7021 / RAL 7035 Fan top covers

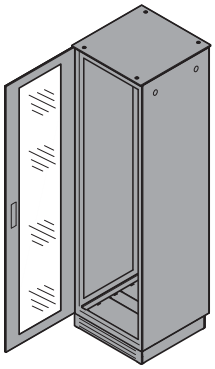

Colour combination RAL 7035 (light grey)/RAL 7021 (black grey)

	Cabinet dimensions				Fan top cover				
					Top cover for 6 fans	Fan for fan top cover	Thermostat	Speed control	Lifting eye
					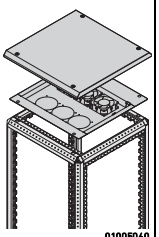 01005060	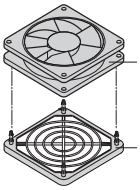 kta44844	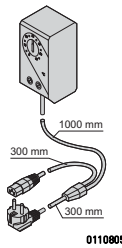 01108052	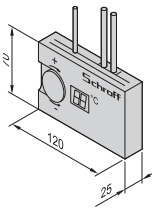 01105055	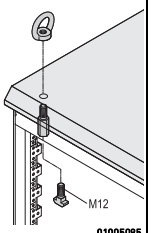 01005085
					St, 1.5 mm, raised cover, 3 axial fans, 230 V_{AC}, incl. cabling andGND/earthing, connecting cable 2.5 m, SCHUKO/ IEC60320 C12 plug	fan with grille for top assembly, 230 V_{AC}, 38x119x119 mm, for 50 Hz, 162 m^3/h	with mains cable 230 V_{AC} (SCHUKO/UTE plug/ IEC 60320 C13 socket), adjustment range 0 ... 60°C	fully wired, 90 ... 264 V_{AC}, input SCHUKO/ UTE plug, outlet IEC 60320 C13 socket; external NTC sensor 1.5 m	for fan top cover, applications and load in accordance with DIN 582
					RAL 7021				
No.	Height U	Height mm	Width mm	Depth mm	1 piece assembled	1 piece assembled	1 piece assembled	1 piece assembled	PU 4 pieces assembled
1	24	1200	600	600	21130-400	23130-165	20118-750	60715-005	23130-090
2	24	1200	600	800	21130-401				
3	24	1200	600	900	21130-406				
4	24	1200	600	1000	21130-407				
5	24	1200	600	1100	–				
6	24	1200	600	1200	–				
7	24	1200	800	600	21130-402	23130-165	20118-750	60715-005	23130-090
8	24	1200	800	800	21130-403				
9	24	1200	800	900	21130-404				
10	24	1200	800	1000	21130-405				
11	29	1400	600	600	21130-400	23130-165	20118-750	60715-005	23130-090
12	29	1400	600	800	21130-401				
13	29	1400	800	600	21130-402	23130-165	20118-750	60715-005	23130-090
14	29	1400	800	800	21130-403				
15	38	1800	600	600	21130-400	23130-165	20118-750	60715-005	23130-090
16	38	1800	600	800	21130-401				
17	38	1800	800	600	21130-402	23130-165	20118-750	60715-005	23130-090
18	38	1800	800	800	21130-403				
19	42	2000	600	600	21130-400	23130-165	20118-750	60715-005	23130-090
20	42	2000	600	800	21130-401				
21	42	2000	600	900	21130-406				
22	42	2000	600	1000	21130-407				
23	42	2000	600	1100	–				
24	42	2000	600	1200	–				
25	42	2000	800	600	21130-402	23130-165	20118-750	60715-005	23130-090
26	42	2000	800	800	21130-403				
27	42	2000	800	900	21130-404				
28	42	2000	800	1000	21130-405				
29	42	2000	800	1100	–				
30	42	2000	800	1200	–				
31	47	2200	600	600	21130-400	23130-165	20118-750	60715-005	23130-090
32	47	2200	600	800	21130-401				
33	47	2200	600	900	21130-406				
34	47	2200	600	1000	21130-407				
35	47	2200	600	1100	–				
36	47	2200	600	1200	–				
37	47	2200	800	600	21130-402	23130-165	20118-750	60715-005	23130-090
38	47	2200	800	800	21130-403				
39	47	2200	800	900	21130-404				
40	47	2200	800	1000	21130-405				
41	47	2200	800	1100	–				
42	47	2200	800	1200	–				

Cabinets – VARISTAR Datacom/Networking

RAL 7021 / RAL 7035 Base plates

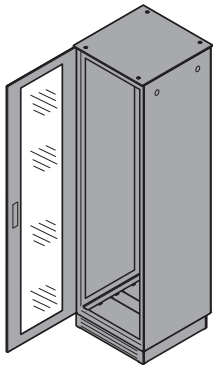

Colour combination RAL 7035 (light grey)/RAL 7021 (black grey)

	Cabinet dimensions				Base plate, multi-piece	Base plate			Base plate for lateral cable ducting		
						Brush strip	Dust filter set	Cover plate	For cabinet width 600 mm	For cabinet width 800 mm	Brush strip
					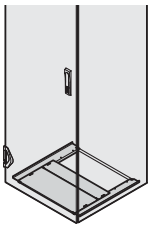 01004104	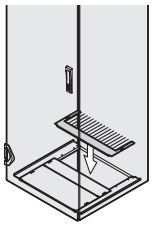 01004105	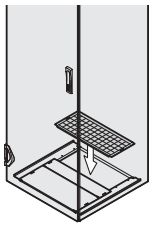 01004059	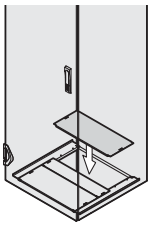 01004106	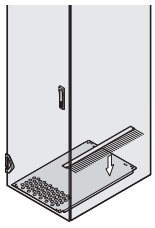 01006072	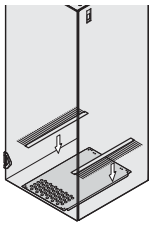 01006094	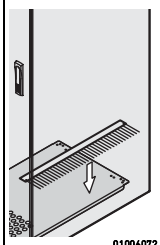 01006072
					St, 1.5 mm, multi-piece, opening to rear 200 mm deep (no rear opening with 300 mm cabinet depth), incl. GND/ earthing, dimensions see page 1.9	nylon, black	filter mat, white, class M1, in accordance with EN 799-G3	St, 1.5 mm, please order gasket IP55 separately	St, 1.5 mm, one brush strip opening on one side, please order brush strip separately	St, 1.5 mm, brush strip opening on both sides, please order brush strip separately	nylon, black, is assembled laterally, please order one brush strip at cabinet width of 600 mm, but two brush strips at cabinet width of 800 mm
					RAL 7021			RAL 7021	RAL 7021	RAL 7021	
No.	Height U	Height mm	Width mm	Depth mm	1 piece assembled	1 piece assembled	1 piece assembled	1 piece assembled	1 piece assembled	1 piece assembled	1 piece assembled
1	24	1200	600	600	23130-001	23130-074	23130-075	23130-076	23130-378	–	23130-074
2	24	1200	600	800	23130-002				23130-353		23130-134
3	24	1200	600	900	23130-003				23130-354		23130-374
4	24	1200	600	1000	23130-004				23130-355		23130-375
5	24	1200	600	1100	23130-358				23130-356		23130-376
6	24	1200	600	1200	23130-359				23130-357		23130-377
7	24	1200	800	600	23130-005	23130-134	23130-135	23130-136	–	23130-378	23130-074
8	24	1200	800	800	23130-006					23130-353	23130-134
9	24	1200	800	900	23130-007					23130-354	23130-374
10	24	1200	800	1000	23130-008					23130-355	23130-375
11	29	1400	600	600	23130-001	23130-074	23130-075	23130-076	23130-378	–	23130-074
12	29	1400	600	800	23130-002				23130-353		23130-134
13	29	1400	800	600	23130-005	23130-134	23130-135	23130-136	–	23130-378	23130-074
14	29	1400	800	800	23130-006					23130-353	23130-134
15	38	1800	600	600	23130-001	23130-074	23130-075	23130-076	23130-378	–	23130-074
16	38	1800	600	800	23130-002				23130-353		23130-134
17	38	1800	800	600	23130-005	23130-134	23130-135	23130-136	–	23130-378	23130-074
18	38	1800	800	800	23130-006					23130-353	23130-134
19	42	2000	600	600	23130-001	23130-074	23130-075	23130-076	23130-378	–	23130-074
20	42	2000	600	800	23130-002				23130-353		23130-134
21	42	2000	600	900	23130-003				23130-354		23130-374
22	42	2000	600	1000	23130-004				23130-355		23130-375
23	42	2000	600	1100	23130-358				23130-356		23130-376
24	42	2000	600	1200	23130-359				23130-357		23130-377
25	42	2000	800	600	23130-005	23130-134	23130-135	23130-136	–	23130-378	23130-074
26	42	2000	800	800	23130-006					23130-353	23130-134
27	42	2000	800	900	23130-007					23130-354	23130-374
28	42	2000	800	1000	23130-008					23130-355	23130-375
29	42	2000	800	1100	23130-360					23130-356	23130-376
30	42	2000	800	1200	23130-361					23130-357	23130-377
31	47	2200	600	600	23130-001	23130-074	23130-075	23130-076	23130-378	–	23130-074
32	47	2200	600	800	23130-002				23130-353		23130-134
33	47	2200	600	900	23130-003				23130-354		23130-374
34	47	2200	600	1000	23130-004				23130-355		23130-375
35	47	2200	600	1100	23130-358				23130-356		23130-376
36	47	2200	600	1200	23130-359				23130-357		23130-377
37	47	2200	800	600	23130-005	23130-134	23130-135	23130-136	–	23130-378	23130-074
38	47	2200	800	800	23130-006					23130-353	23130-134
39	47	2200	800	900	23130-007					23130-354	23130-374
40	47	2200	800	1000	23130-008					23130-355	23130-375
41	47	2200	800	1100	23130-360					23130-356	23130-376
42	47	2200	800	1200	23130-361					23130-357	23130-377

RAL 7021 / RAL 7035 Bases/plinths

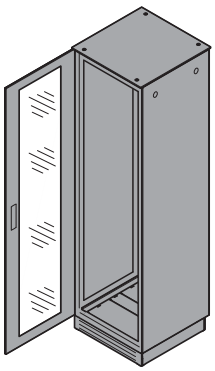

Colour combination RAL 7035 (light grey)/RAL 7021 (black grey)

	Cabinet dimensions				Base/plinth			Base/plinth, mobile	
					Base/plinth, ventilated	Side trim	Tilt protection, extractable	Base/plinth, mobile	Tilt protection, extractable
					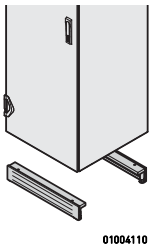 01004110	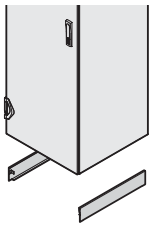 01004053	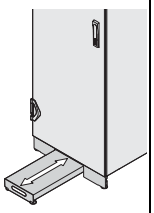 01006055	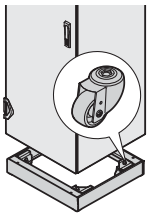 01004156	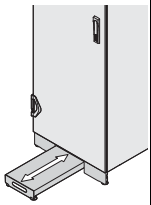 01006055
					support with adjustable feet and 2 trims, perforated, static load-carrying capacity 1000 kg; please order side trims separately	St, 1.5 mm	St, 2 mm, for retrofitting to the base, incl. cover strip	support, St, 3 mm, trim, St, 1.5 mm, static load-carrying capacity on castors 400 kg, on adjustable feet 1000 kg	St, 2 mm, for retrofitting to the base, incl. cover strip
No.	Height U	Height mm	Width mm	Depth mm	RAL 7021 PU 1 kit assembled	RAL 7021 PU 1 pair assembled	RAL 7021 1 piece assembled	RAL 7021 1 piece assembled	RAL 7021 1 piece assembled
1	24	1200	600	600	23130-187	23130-169	–	23130-208	–
2	24	1200	600	800		23130-170	–	23130-209	–
3	24	1200	600	900		23130-171	23130-345	23130-210	23130-345
4	24	1200	600	1000		23130-172	23130-346	23130-211	23130-346
5	24	1200	600	1100		23130-362	23130-347	23130-368	23130-347
6	24	1200	600	1200		23130-363	23130-348	23130-369	23130-348
7	24	1200	800	600	23130-194	23130-169	–	23130-212	–
8	24	1200	800	800		23130-170	–	23130-213	–
9	24	1200	800	900		23130-171	23130-349	23130-214	23130-349
10	24	1200	800	1000		23130-172	23130-350	23130-215	23130-350
11	29	1400	600	600	23130-187	23130-169	–	23130-208	–
12	29	1400	600	800		23130-170		23130-209	
13	29	1400	800	600	23130-194	23130-169	–	23130-212	–
14	29	1400	800	800		23130-170		23130-213	
15	38	1800	600	600	23130-187	23130-169	–	23130-208	–
16	38	1800	600	800		23130-170		23130-209	
17	38	1800	800	600	23130-194	23130-169	–	23130-212	–
18	38	1800	800	800		23130-170		23130-213	
19	42	2000	600	600	23130-187	23130-169	–	23130-208	–
20	42	2000	600	800		23130-170	–	23130-209	–
21	42	2000	600	900		23130-171	23130-345	23130-210	23130-345
22	42	2000	600	1000		23130-172	23130-346	23130-211	23130-346
23	42	2000	600	1100		23130-362	23130-347	23130-368	23130-347
24	42	2000	600	1200		23130-363	23130-348	23130-369	23130-348
25	42	2000	800	600	23130-194	23130-169	–	23130-212	–
26	42	2000	800	800		23130-170	–	23130-213	–
27	42	2000	800	900		23130-171	23130-349	23130-214	23130-349
28	42	2000	800	1000		23130-172	23130-350	23130-215	23130-350
29	42	2000	800	1100		23130-362	23130-351	23130-370	23130-351
30	42	2000	800	1200		23130-363	23130-352	23130-371	23130-352
31	47	2200	600	600	23130-187	23130-169	–	23130-208	–
32	47	2200	600	800		23130-170	–	23130-209	–
33	47	2200	600	900		23130-171	23130-345	23130-210	23130-345
34	47	2200	600	1000		23130-172	23130-346	23130-211	23130-346
35	47	2200	600	1100		23130-362	23130-347	23130-368	23130-347
36	47	2200	600	1200		23130-363	23130-348	23130-369	23130-348
37	47	2200	800	600	23130-194	23130-169	–	23130-212	–
38	47	2200	800	800		23130-170	–	23130-213	–
39	47	2200	800	900		23130-171	23130-349	23130-214	23130-349
40	47	2200	800	1000		23130-172	23130-350	23130-215	23130-350
41	47	2200	800	1100		23130-362	23130-351	23130-370	23130-351
42	47	2200	800	1200		23130-363	23130-352	23130-371	23130-352

Cabinets – VARISTAR Datacom/Networking

RAL 7021 / RAL 7035 19" panel/slide mounts

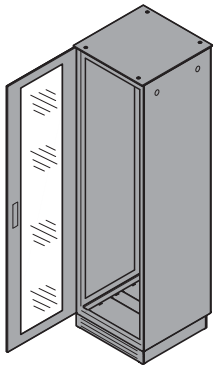

Colour combination RAL 7035 (light grey)/RAL 7021 (black grey)

Dimension
Standard fitting

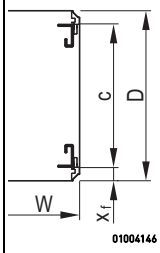

x_f = distance from front
c = pitch of 19" panel/slide mounts
D = cabinet depth
W = cabinet width

19" panel/slide mount EIA

RAL 7035 / AlZn

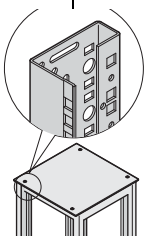

St, 1.75 mm, reduced-width adaptor bracket required for 800 mm width; depth members are required for partial-height mounting

U height identification for 19" panel/slide mounts

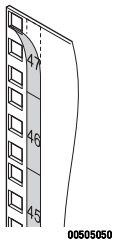

paper strip, white, serial numbered from 1 ... 47 U

19" assembly kit M6

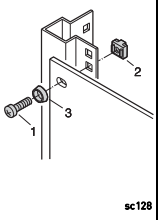

assembly kit: item 1: screws, item 2: cage nuts, item 3: washers

	Cabinet dimensions						RAL 7035			
	Height		Width	Depth	x_f	c	PU 1 pair	PU 1 pair	PU 4 pieces	PU 50 pieces
No.	U	mm	mm	mm	mm	mm	assembled	assembled	assembled	supplied loose
1	24	1200	600	600	50	500	23130-021	23130-031	25127-997	21101-809
2	24	1200	600	800	150	500				
3	24	1200	600	900	70	740				
4	24	1200	600	1000	70	740				
5	24	1200	600	1100	70	740				
6	24	1200	600	1200	70	740				
7	24	1200	800	600	50	500	23130-021	23130-031	25127-997	21101-809
8	24	1200	800	800	150	500				
9	24	1200	800	900	70	740				
10	24	1200	800	1000	70	740				
11	29	1400	600	600	50	500	23130-022	23130-032	25127-997	21101-809
12	29	1400	600	800	150	500				
13	29	1400	800	600	50	500	23130-022	23130-032	25127-997	21101-809
14	29	1400	800	800	150	500				
15	38	1800	600	600	50	500	23130-024	23130-034	25127-997	21101-809
16	38	1800	600	800	150	500				
17	38	1800	800	600	50	500	23130-024	23130-034	25127-997	21101-809
18	38	1800	800	800	150	500				
19	42	2000	600	600	50	500	23130-025	23130-035	25127-997	21101-809
20	42	2000	600	800	150	500				
21	42	2000	600	900	70	740				
22	42	2000	600	1000	70	740				
23	42	2000	600	1100	70	740				
24	42	2000	600	1200	70	740				
25	42	2000	800	600	50	500	23130-025	23130-035	25127-997	21101-809
26	42	2000	800	800	150	500				
27	42	2000	800	900	70	740				
28	42	2000	800	1000	70	740				
29	42	2000	800	1100	70	740				
30	42	2000	800	1200	70	740				
31	47	2200	600	600	50	500	23130-026	23130-036	25127-997	21101-809
32	47	2200	600	800	150	500				
33	47	2200	600	900	70	740				
34	47	2200	600	1000	70	740				
35	47	2200	600	1100	70	740				
36	47	2200	600	1200	70	740				
37	47	2200	800	600	50	500	23130-026	23130-036	25127-997	21101-809
38	47	2200	800	800	150	500				
39	47	2200	800	900	70	740				
40	47	2200	800	1000	70	740				
41	47	2200	800	1100	70	740				
42	47	2200	800	1200	70	740				

RAL 7021 Adapter bracket for reduced width, depth member, cross member

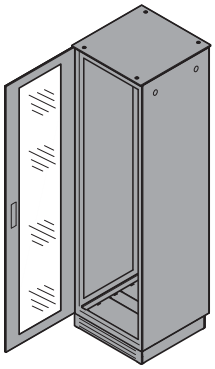

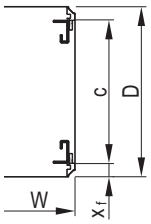

01004146

x_f = distance from front
c = pitch of 19" panel/slide mounts
D = cabinet depth
W = cabinet width

Dimension Standard fitting

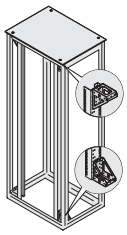

01004128

St, 2 mm, finish AlZn, for fixing the 19" panel/slide mounts in 800 mm wide cabinets

Adapter bracket for reduced width

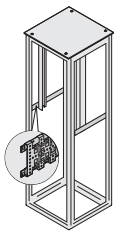

01004056

St, 1.5 mm, finish AlZn; only required for partial-height mounting

Depth member, 3 rows

01004056

St, 2.5 mm

Heavy-load cross member

All RAL 7021 (black grey) RAL 7035 (light grey) on request

No.	Cabinet dimensions Height U	Height mm	Width mm	Depth mm	x_f mm	C mm	PU 4 pieces assembled	PU 1 pair assembled	PU 4 pieces fitted
1	24	1200	600	600	50	500	–	23130-081	–
2	24	1200	600	800	150	500		23130-082	
3	24	1200	600	900	70	740		23130-083	
4	24	1200	600	1000	70	740		23130-084	
5	24	1200	600	1100	70	740		23130-364	
6	24	1200	600	1200	70	740		23130-365	
7	24	1200	800	600	50	500	23130-091	23130-081	–
8	24	1200	800	800	150	500		23130-082	–
9	24	1200	800	900	70	740		23130-083	–
10	24	1200	800	1000	70	740		23130-084	23130-544
11	29	1400	600	600	50	500	–	23130-081	–
12	29	1400	600	800	150	500		23130-082	
13	29	1400	800	600	50	500	23130-091	23130-081	–
14	29	1400	800	800	150	500		23130-082	
15	38	1800	600	600	50	500	–	23130-081	–
16	38	1800	600	800	150	500		23130-082	
17	38	1800	800	600	50	500	23130-091	23130-081	–
18	38	1800	800	800	150	500		23130-082	
19	42	2000	600	600	50	500	–	23130-081	–
20	42	2000	600	800	150	500		23130-082	
21	42	2000	600	900	70	740		23130-083	
22	42	2000	600	1000	70	740		23130-084	
23	42	2000	600	1100	70	740		23130-364	
24	42	2000	600	1200	70	740		23130-365	
25	42	2000	800	600	50	500	23130-091	23130-081	–
26	42	2000	800	800	150	500		23130-082	–
27	42	2000	800	900	70	740		23130-083	–
28	42	2000	800	1000	70	740		23130-084	23130-544
29	42	2000	800	1100	70	740		23130-364	23130-545
30	42	2000	800	1200	70	740		23130-365	23130-546
31	47	2200	600	600	50	500	–	23130-081	–
32	47	2200	600	800	150	500		23130-082	
33	47	2200	600	900	70	740		23130-083	
34	47	2200	600	1000	70	740		23130-084	
35	47	2200	600	1100	70	740		23130-364	
36	47	2200	600	1200	70	740		23130-365	
37	47	2200	800	600	50	500	23130-091	23130-081	–
38	47	2200	800	800	150	500		23130-082	–
39	47	2200	800	900	70	740		23130-083	–
40	47	2200	800	1000	70	740		23130-084	23130-544
41	47	2200	800	1100	70	740		23130-364	23130-545
42	47	2200	800	1200	70	740		23130-365	23130-546

Cabinets – VARISTAR Datacom/Networking

RAL 7021 / RAL 7035 Swing frames

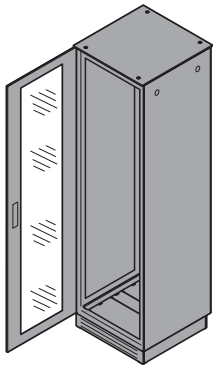

Colour combination RAL 7035 (light grey)/RAL 7021 (black grey)

	Cabinet dimensions				Swing frame	Stop 120°	Swing frame trim		Door opening 160°		Safety lock
							Asymmetrical assembly	Symmetrical assembly	Hinge 160°	Stop 160°	
	Height		Width	Depth							
No.	U	mm	mm	mm	RAL 7021 1 piece assembled	RAL 7021 PU 1 kit assembled	RAL 7021 1 piece assembled	RAL 7021 PU 2 pieces assembled	PU 2 pieces assembled	RAL 7021 PU 1 kit assembled	1 piece assembled
					01005070 St, 2 mm, RAL 7021, load-carrying capacity: 150 kg, 120° hinge, square locks incl. 2 keys	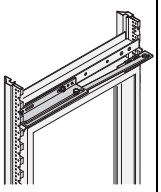 01005061 St; for safety reasons a swing frame stop is recommended	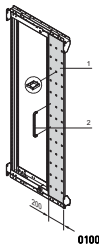 01005058 St, 1.5 mm, RAL 7021, trim (item 1, 2 x width 100 mm) incl. handle (item 2) and cut-out for cable eyes	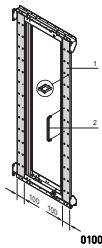 01005057 St, 1.5 mm, RAL 7021, trim (item 1, 2 x width 100 mm) incl. handle (item 2) and cut-out for cable eyes	is screwed to the swing frame in place of the 120° hinge	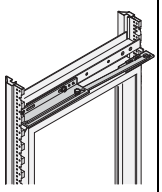 01005061 St, usable only in connection with 160° hinge, swing frame stop is recommended for safety reasons	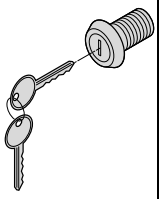 41001517 for swing frame, instead of square lock, incl. 2 keys
1	24	1200	600	600	21130-413	23130-158	–	–	23130-160	23130-159	60113-267
2	24	1200	600	800							
3	24	1200	600	900							
4	24	1200	600	1000							
5	24	1200	600	1100							
6	24	1200	600	1200							
7	24	1200	800	600	21130-423	23130-158	21130-432	21130-442	23130-160	23130-159	60113-267
8	24	1200	800	800							
9	24	1200	800	900							
10	24	1200	800	1000							
11	29	1400	600	600	21130-414	23130-158	–	–	23130-160	23130-159	60113-267
12	29	1400	600	800							
13	29	1400	800	600	21130-424	23130-158	21130-433	21130-443	23130-160	23130-159	60113-267
14	29	1400	800	800							
15	38	1800	600	600	21130-416	23130-158	–	–	23130-160	23130-159	60113-267
16	38	1800	600	800							
17	38	1800	800	600	21130-426	23130-158	21130-435	21130-445	23130-160	23130-159	60113-267
18	38	1800	800	800							
19	42	2000	600	600	21130-417	23130-158	–	–	23130-160	23130-159	60113-267
20	42	2000	600	800							
21	42	2000	600	900							
22	42	2000	600	1000							
23	42	2000	600	1100							
24	42	2000	600	1200							
25	42	2000	800	600	21130-427	23130-158	21130-436	21130-446	23130-160	23130-159	60113-267
26	42	2000	800	800							
27	42	2000	800	900							
28	42	2000	800	1000							
29	42	2000	800	1100							
30	42	2000	800	1200							
31	47	2200	600	600	21130-418	23130-158	–	–	23130-160	23130-159	60113-267
32	47	2200	600	800							
33	47	2200	600	900							
34	47	2200	600	1000							
35	47	2200	600	1100							
36	47	2200	600	1200							
37	47	2200	800	600	21130-428	23130-158	21130-437	21130-447	23130-160	23130-159	60113-267
38	47	2200	800	800							
39	47	2200	800	900							
40	47	2200	800	1000							
41	47	2200	800	1100							
42	47	2200	800	1200							

RAL 7021 / RAL 7035 Fixed shelves

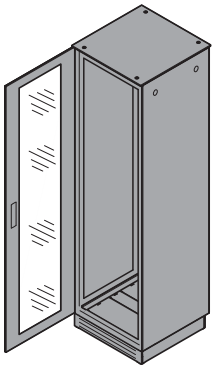

Colour combination RAL 7035 (light grey)/RAL 7021 (black grey)

	Cabinet dimensions				Stationary shelf		
					Full depth	Shortened by 100 mm	Depth member, 3 rows
					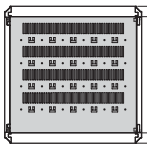 01004142	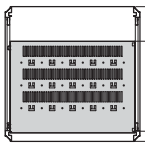 01004142	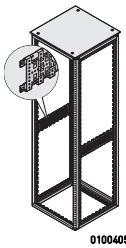 01004056
					St, 1.5 mm, static load-carrying capacity 75 kg, 1 U, incl. GND/ earthing	St, 1.5 mm, static load-carrying capacity 75 kg, 1 U, depth 479 mm, incl. GND/ earthing, for recessed installation order depth members separately	length 660 mm, St, 1.5 mm, finish AlZn, required for recessed shelf
					RAL 7035	RAL 7035	AlZn
No.	Height U	Height mm	Width mm	Depth mm	1 piece assembled	1 piece assembled	PU 1 pair assembled
1	24	1200	600	600	22130-323	22130-322	23130-081
2	24	1200	600	800	22130-325	22130-324	23130-082
3	24	1200	600	900	22130-326	–	23130-083
4	24	1200	600	1000	22130-327	–	23130-084
5	24	1200	600	1100	22130-550	–	23130-364
6	24	1200	600	1200	22130-551	–	23130-365
7	24	1200	800	600	21130-333	22130-332	23130-081
8	24	1200	800	800	21130-335	22130-334	23130-082
9	24	1200	800	900	22130-336	–	23130-083
10	24	1200	800	1000	22130-337	–	23130-084
11	29	1400	600	600	22130-323	22130-322	23130-081
12	29	1400	600	800	22130-325	22130-324	23130-082
13	29	1400	800	600	21130-333	22130-332	23130-081
14	29	1400	800	800	21130-335	22130-334	23130-082
15	38	1800	600	600	22130-323	22130-322	23130-081
16	38	1800	600	800	22130-325	22130-324	23130-082
17	38	1800	800	600	21130-333	22130-332	23130-081
18	38	1800	800	800	21130-335	22130-334	23130-082
19	42	2000	600	600	22130-323	22130-322	23130-081
20	42	2000	600	800	22130-325	22130-324	23130-082
21	42	2000	600	900	22130-326	–	23130-083
22	42	2000	600	1000	22130-327	–	23130-084
23	42	2000	600	1100	22130-550	–	23130-364
24	42	2000	600	1200	22130-551	–	23130-365
25	42	2000	800	600	21130-333	22130-332	23130-081
26	42	2000	800	800	21130-335	22130-334	23130-082
27	42	2000	800	900	22130-336	–	23130-083
28	42	2000	800	1000	22130-337	–	23130-084
29	42	2000	800	1100	22130-552	–	23130-364
30	42	2000	800	1200	22130-553	–	23130-365
31	47	2200	600	600	22130-323	22130-322	23130-081
32	47	2200	600	800	22130-325	22130-324	23130-082
33	47	2200	600	900	22130-326	–	23130-083
34	47	2200	600	1000	22130-327	–	23130-084
35	47	2200	600	1100	22130-550	–	23130-364
36	47	2200	600	1200	22130-551	–	23130-365
37	47	2200	800	600	21130-333	22130-332	23130-081
38	47	2200	800	800	21130-335	22130-334	23130-082
39	47	2200	800	900	22130-336	–	23130-083
40	47	2200	800	1000	22130-337	–	23130-084
41	47	2200	800	1100	22130-552	–	23130-364
42	47	2200	800	1200	22130-553	–	23130-365

Cabinets – VARISTAR Datacom/Networking

RAL 7021 / RAL 7035 Telescopic shelves

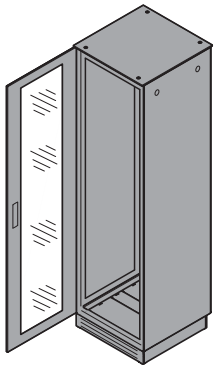

Colour combination RAL 7035 (light grey)/RAL 7021 (black grey)

	Cabinet dimensions				Telescopic shelf, 2 U				
					Full depth	Shortened by 100 mm	Mounting bracket	T-bar lock	GND/earthing
					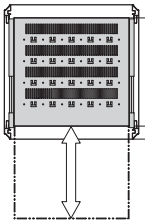 01004144	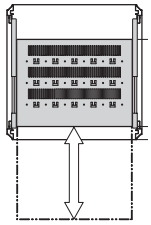 01004145	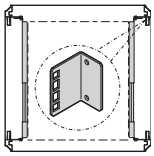 01005054	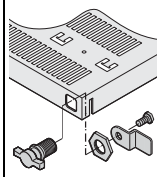 01004125	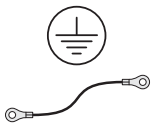 05904052
					St, 1.5 mm, static load-carrying capacity 70/50 kg (width 600/ 800 mm), incl. telescopic slide, please order mounting bracket separately	St, 1.5 mm, static load-carrying capacity 70/50 kg (width 600/ 800 mm), incl. telescopic slide, please order mounting bracket separately	St, finish AlZn	to lock the telescopic shelf	for telescopic shelf
					RAL 7035	RAL 7035			
No.	Height U	Height mm	Width mm	Depth mm	1 piece assembled	1 piece assembled	PU 4 pieces assembled	1 piece assembled	1 piece assembled
1	24	1200	600	600	22130-353	22130-352	23130-274	23130-092	23130-140
2	24	1200	600	800	22130-355	22130-354			
3	24	1200	600	900	–	–			
4	24	1200	600	1000	–	–			
5	24	1200	600	1100	–	–			
6	24	1200	600	1200	–	–			
7	24	1200	800	600	22130-373	22130-372	23130-274	23130-092	23130-140
8	24	1200	800	800	22130-375	22130-374			
9	24	1200	800	900	–	–			
10	24	1200	800	1000	–	–			
11	29	1400	600	600	22130-353	22130-352	23130-274	23130-092	23130-140
12	29	1400	600	800	22130-355	22130-354			
13	29	1400	800	600	22130-373	22130-372	23130-274	23130-092	23130-140
14	29	1400	800	800	22130-375	22130-374			
15	38	1800	600	600	22130-353	22130-352	23130-274	23130-092	23130-140
16	38	1800	600	800	22130-355	22130-354			
17	38	1800	800	600	22130-373	22130-372	23130-274	23130-092	23130-140
18	38	1800	800	800	22130-375	22130-374			
19	42	2000	600	600	22130-353	22130-352	23130-274	23130-092	23130-140
20	42	2000	600	800	22130-355	22130-354			
21	42	2000	600	900	–	–			
22	42	2000	600	1000	–	–			
23	42	2000	600	1100	–	–			
24	42	2000	600	1200	–	–			
25	42	2000	800	600	22130-373	22130-372	23130-274	23130-092	23130-140
26	42	2000	800	800	22130-375	22130-374			
27	42	2000	800	900	–	–			
28	42	2000	800	1000	–	–			
29	42	2000	800	1100	–	–			
30	42	2000	800	1200	–	–			
31	47	2200	600	600	22130-353	22130-352	23130-274	23130-092	23130-140
32	47	2200	600	800	22130-355	22130-354			
33	47	2200	600	900	–	–			
34	47	2200	600	1000	–	–			
35	47	2200	600	1100	–	–			
36	47	2200	600	1200	–	–			
37	47	2200	800	600	22130-373	22130-372	23130-274	23130-092	23130-140
38	47	2200	800	800	22130-375	22130-374			
39	47	2200	800	900	–	–			
40	47	2200	800	1000	–	–			
41	47	2200	800	1100	–	–			
42	47	2200	800	1200	–	–			

RAL 7021 / RAL 7035 19" shelves, fixed or telescopic, 1 U

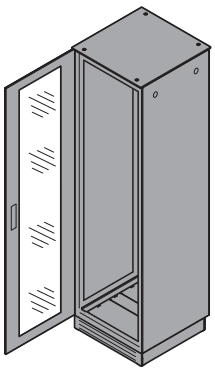

Colour combination RAL 7035 (light grey)/RAL 7021 (black grey)

	Cabinet dimensions				Dimension Standard fitting		19" stationary shelf, 1 U, 75 kg		19" telescopic shelf, 1 U, 30 kg		
							Full depth	Shortened by 100 mm	Full depth	Shortened by 100 mm	GND/earthing
	Height		Width	Depth	x_f	c	RAL 7035	RAL 7035	RAL 7035	RAL 7035	
No.	U	mm	mm	mm	mm	mm	1 piece assembled	1 piece assembled	1 piece assembled	1 piece assembled	PU 1 kit assembled
1	24	1200	600	600	50	500	22130-303	22130-302	22130-343	22130-342	23130-140
2	24	1200	600	800	150	500	22130-303	22130-302	22130-343	22130-342	23130-140
3	24	1200	600	900	70	740	22130-309	–	–	–	–
4	24	1200	600	1000	70	740	22130-309	–	–	–	–
5	24	1200	600	1100	70	740	22130-309	–	–	–	–
6	24	1200	600	1200	70	740	22130-309	–	–	–	–
7	24	1200	800	600	50	500	22130-303	22130-302	22130-343	22130-342	23130-140
8	24	1200	800	800	150	500	22130-303	22130-302	22130-343	22130-342	23130-140
9	24	1200	800	900	70	740	22130-309	–	–	–	–
10	24	1200	800	1000	70	740	22130-309	–	–	–	–
11	29	1400	600	600	50	500	22130-303	22130-302	22130-343	22130-342	23130-140
12	29	1400	600	800	150	500	22130-303	22130-302	22130-343	22130-342	23130-140
13	29	1400	800	600	50	500	22130-303	22130-302	22130-343	22130-342	23130-140
14	29	1400	800	800	150	500	22130-303	22130-302	22130-343	22130-342	23130-140
15	38	1800	600	600	50	500	22130-303	22130-302	22130-343	22130-342	23130-140
16	38	1800	600	800	150	500	22130-303	22130-302	22130-343	22130-342	23130-140
17	38	1800	800	600	50	500	22130-303	22130-302	22130-343	22130-342	23130-140
18	38	1800	800	800	150	500	22130-303	22130-302	22130-343	22130-342	23130-140
19	42	2000	600	600	50	500	22130-303	22130-302	22130-343	22130-342	23130-140
20	42	2000	600	800	150	500	22130-303	22130-302	22130-343	22130-342	23130-140
21	42	2000	600	900	70	740	22130-309	–	–	–	–
22	42	2000	600	1000	70	740	22130-309	–	–	–	–
23	42	2000	600	1100	70	740	22130-309	–	–	–	–
24	42	2000	600	1200	70	740	22130-309	–	–	–	–
25	42	2000	800	600	50	500	22130-303	22130-302	22130-343	22130-342	23130-140
26	42	2000	800	800	150	500	22130-303	22130-302	22130-343	22130-342	23130-140
27	42	2000	800	900	70	740	22130-309	–	–	–	–
28	42	2000	800	1000	70	740	22130-309	–	–	–	–
29	42	2000	800	1100	70	740	22130-309	–	–	–	–
30	42	2000	800	1200	70	740	22130-309	–	–	–	–
31	47	2200	600	600	50	500	22130-303	22130-302	22130-343	22130-342	23130-140
32	47	2200	600	800	150	500	22130-303	22130-302	22130-343	22130-342	23130-140
33	47	2200	600	900	70	740	22130-309	–	–	–	–
34	47	2200	600	1000	70	740	22130-309	–	–	–	–
35	47	2200	600	1100	70	740	22130-309	–	–	–	–
36	47	2200	600	1200	70	740	22130-309	–	–	–	–
37	47	2200	800	600	50	500	22130-303	22130-302	22130-343	22130-342	23130-140
38	47	2200	800	800	150	500	22130-303	22130-302	22130-343	22130-342	23130-140
39	47	2200	800	900	70	740	22130-309	–	–	–	–
40	47	2200	800	1000	70	740	22130-309	–	–	–	–
41	47	2200	800	1100	70	740	22130-309	–	–	–	–
42	47	2200	800	1200	70	740	22130-309	–	–	–	–

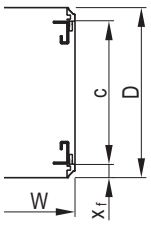

01004146

x_f = distance from front
c = pitch of 19" panel/slide mounts
D = cabinet depth
W = cabinet width

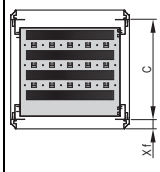

01004118

St, 1.5 mm, static load-carrying capacity 75 kg, depth 600 mm, incl. GND/ earthing

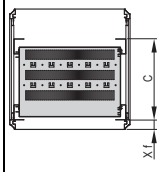

01004119

St, 1.5 mm, static load-carrying capacity 75 kg, depth 500 mm, incl. GND/ earthing

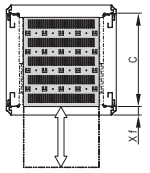

01004123

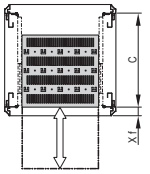

01004122

St, 1.5 mm, static load-carrying capacity 30 kg, incl. telescopic slide; please order GND/earthing kit separately

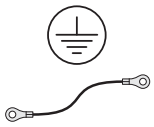

05904052

for telescopic shelf

Cabinets – VARISTAR Datacom/Networking

RAL 7021 / RAL 7035 19'' telescopic shelves, 2 U

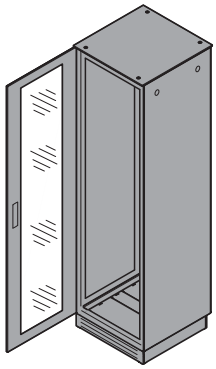

Colour combination RAL 7035 (light grey)/RAL 7021 (black grey)

	Dimension		Telescopic shelf, 2 U, 70 kg			GND/earthing
	Standard fitting		Full depth	Shortened by 100 mm	T-bar lock	
	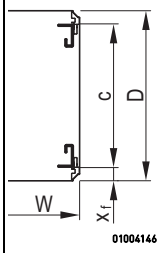		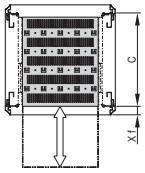	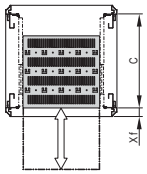	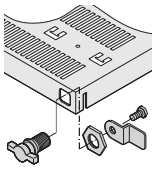	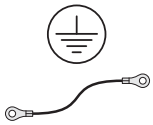
	01004146		01004123	01004122	01004125	05904052
	x_f = distance from front c = pitch of 19" panel/slide mounts D = cabinet depth W = cabinet width		St, 1.5 mm, static load-carrying capacity 70 kg, incl. telescopic slide; Please order T-bar lock and earthing kit separately	St, 1.5 mm, static load-carrying capacity 70 kg, incl. telescopic slide; Please order T-bar lock and earthing kit separately	to lock the telescopic shelf	for telescopic shelf
	Cabinet dimensions					
No.	Height U	Height mm	Width mm	Depth mm	x_f mm	c mm	RAL 7035 1 piece assembled	RAL 7035 1 piece assembled	1 piece assembled	PU 1 kit assembled
1	24	1200	600	600	50	500	22130-353	22130-352	23130-092	23130-140
2	24	1200	600	800	150	500	22130-353	22130-352		
3	24	1200	600	900	70	740	–	–		
4	24	1200	600	1000	70	740	–	–		
5	24	1200	600	1100	70	740	–	–		
6	24	1200	600	1200	70	740	–	–		
7	24	1200	800	600	50	500	22130-353	22130-352	23130-092	23130-140
8	24	1200	800	800	150	500	22130-353	22130-352		
9	24	1200	800	900	70	740	–	–	23130-092	23130-140
10	24	1200	800	1000	70	740	–	–		
11	29	1400	600	600	50	500	22130-353	22130-352	23130-092	23130-140
12	29	1400	600	800	150	500	22130-353	22130-352		
13	29	1400	800	600	50	500	22130-353	22130-352	23130-092	23130-140
14	29	1400	800	800	150	500	22130-353	22130-352		
15	38	1800	600	600	50	500	22130-353	22130-352	23130-092	23130-140
16	38	1800	600	800	150	500	22130-353	22130-352		
17	38	1800	800	600	50	500	22130-353	22130-352	23130-092	23130-140
18	38	1800	800	800	150	500	22130-353	22130-352		
19	42	2000	600	600	50	500	22130-353	22130-352	23130-092	23130-140
20	42	2000	600	800	150	500	22130-353	22130-352		
21	42	2000	600	900	70	740	–	–		
22	42	2000	600	1000	70	740	–	–		
23	42	2000	600	1100	70	740	–	–		
24	42	2000	600	1200	70	740	–	–		
25	42	2000	800	600	50	500	22130-353	22130-352	23130-092	23130-140
26	42	2000	800	800	150	500	22130-353	22130-352		
27	42	2000	800	900	70	740	–	–		
28	42	2000	800	1000	70	740	–	–		
29	42	2000	800	1100	70	740	–	–		
30	42	2000	800	1200	70	740	–	–		
31	47	2200	600	600	50	500	22130-353	22130-352	23130-092	23130-140
32	47	2200	600	800	150	500	22130-353	22130-352		
33	47	2200	600	900	70	740	–	–		
34	47	2200	600	1000	70	740	–	–		
35	47	2200	600	1100	70	740	–	–		
36	47	2200	600	1200	70	740	–	–		
37	47	2200	800	600	50	500	22130-353	22130-352	23130-092	23130-140
38	47	2200	800	800	150	500	22130-353	22130-352		
39	47	2200	800	900	70	740	–	–		
40	47	2200	800	1000	70	740	–	–		
41	47	2200	800	1100	70	740	–	–		
42	47	2200	800	1200	70	740	–	–		

RAL 7021 / RAL 7035 Slide rails

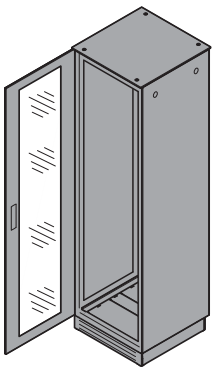

Colour combination RAL 7035 (light grey)/RAL 7021 (black grey)

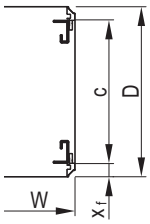

01004146

x_f = distance from front
c = pitch of 19" panel/slide mounts
D = cabinet depth
W = cabinet width

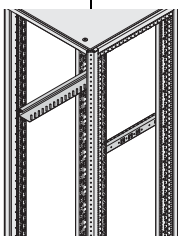

01004056

St, 1.5 mm, finish AlZn, static load-carrying capacity 25 kg/pair

St, 2.5 mm, zinc-plated, static load-carrying capacity 100 kg/pair

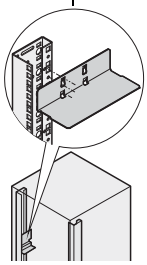

01004154

St, 1.5 mm, finish AlZn, static load-carrying capacity 15 kg/pair

	Cabinet dimensions				Dimension Standard fitting		Slide rail 25 kg AlZn		Slide rail 100 kg zinc-plated		Short slide rail AlZn	
No.	Height U	Height mm	Width mm	Depth mm	x_f mm	c mm	PU 2 pieces supplied loose	PU 10 pieces supplied loose	PU 2 pieces supplied loose	PU 10 pieces supplied loose	PU 2 pieces supplied loose	PU 10 pieces supplied loose
1	24	1200	600	600	50	500	23130-096	23130-101	23130-118	23130-123	23130-094	23130-095
2	24	1200	600	800	150	500	23130-096	23130-101	23130-118	23130-123		
3	24	1200	600	900	70	740	23130-098	23130-103	23130-120	23130-125		
4	24	1200	600	1000	70	740	23130-098	23130-103	23130-120	23130-125		
5	24	1200	600	1100	70	740	23130-098	23130-103	23130-120	23130-125		
6	24	1200	600	1200	70	740	23130-098	23130-103	23130-120	23130-125		
7	24	1200	800	600	50	500	23130-096	23130-101	23130-118	23130-123	23130-094	23130-095
8	24	1200	800	800	150	500	23130-096	23130-101	23130-118	23130-123		
9	24	1200	800	900	70	740	23130-098	23130-103	23130-120	23130-125		
10	24	1200	800	1000	70	740	23130-098	23130-103	23130-120	23130-125		
11	29	1400	600	600	50	500	23130-096	23130-101	23130-118	23130-123	23130-094	23130-095
12	29	1400	600	800	150	500	23130-096	23130-101	23130-118	23130-123		
13	29	1400	800	600	50	500	23130-096	23130-101	23130-118	23130-123	23130-094	23130-095
14	29	1400	800	800	150	500	23130-096	23130-101	23130-118	23130-123		
15	38	1800	600	600	50	500	23130-096	23130-101	23130-118	23130-123	23130-094	23130-095
16	38	1800	600	800	150	500	23130-096	23130-101	23130-118	23130-123		
17	38	1800	800	600	50	500	23130-096	23130-101	23130-118	23130-123	23130-094	23130-095
18	38	1800	800	800	150	500	23130-096	23130-101	23130-118	23130-123		
19	42	2000	600	600	50	500	23130-096	23130-101	23130-118	23130-123	23130-094	23130-095
20	42	2000	600	800	150	500	23130-096	23130-101	23130-118	23130-123		
21	42	2000	600	900	70	740	23130-098	23130-103	23130-120	23130-125		
22	42	2000	600	1000	70	740	23130-098	23130-103	23130-120	23130-125		
23	42	2000	600	1100	70	740	23130-098	23130-103	23130-120	23130-125		
24	42	2000	600	1200	70	740	23130-098	23130-103	23130-120	23130-125		
25	42	2000	800	600	50	500	23130-096	23130-101	23130-118	23130-123	23130-094	23130-095
26	42	2000	800	800	150	500	23130-096	23130-101	23130-118	23130-123		
27	42	2000	800	900	70	740	23130-098	23130-103	23130-120	23130-125		
28	42	2000	800	1000	70	740	23130-098	23130-103	23130-120	23130-125		
29	42	2000	800	1100	70	740	23130-098	23130-103	23130-120	23130-125		
30	42	2000	800	1200	70	740	23130-098	23130-103	23130-120	23130-125		
31	47	2200	600	600	50	500	23130-096	23130-101	23130-118	23130-123	23130-094	23130-095
32	47	2200	600	800	150	500	23130-096	23130-101	23130-118	23130-123		
33	47	2200	600	900	70	740	23130-098	23130-103	23130-120	23130-125		
34	47	2200	600	1000	70	740	23130-098	23130-103	23130-120	23130-125		
35	47	2200	600	1100	70	740	23130-098	23130-103	23130-120	23130-125		
36	47	2200	600	1200	70	740	23130-098	23130-103	23130-120	23130-125		
37	47	2200	800	600	50	500	23130-096	23130-101	23130-118	23130-123	23130-094	23130-095
38	47	2200	800	800	150	500	23130-096	23130-101	23130-118	23130-123		
39	47	2200	800	900	70	740	23130-098	23130-103	23130-120	23130-125		
40	47	2200	800	1000	70	740	23130-098	23130-103	23130-120	23130-125		
41	47	2200	800	1100	70	740	23130-098	23130-103	23130-120	23130-125		
42	47	2200	800	1200	70	740	23130-098	23130-103	23130-120	23130-125		

Cabinets – VARISTAR Datacom/Networking

RAL 7021 / RAL 7035 Cable ducting with C-rails, cable support rails

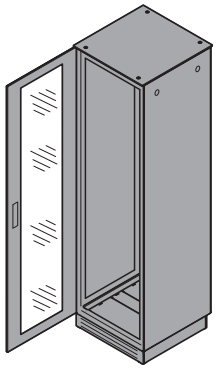

Colour combination RAL 7035 (light grey)/RAL 7021 (black grey)

	Cabinet dimensions				Cable ducting with C-rail					Cable support rail	
					C-rail for cabinet depth	C-rail for cabinet width	Slide nut	Cable shell	Cable retention for C-rail	For cabinet depth	For cabinet width
					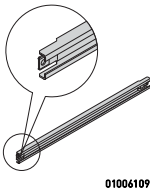 01006109 St, 1.5 mm, finish AlZn	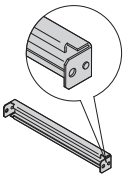 01006107 St, 1.5 mm, finish AlZn	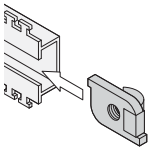 01504054 for C-rail	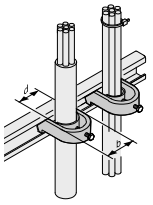 vnt009 for C-rail or for cable support rail , for cable bundles of 42 ... 46 mm, further dimensions see page 1.162	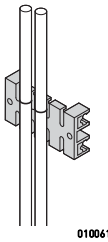 01006110 PA, UL 94 V-0, black, assembly by clipping onto the C-rail	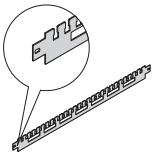 01006108 St, 1.5 mm, length **466,4** mm	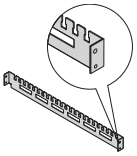 01006106 St, 1.5 mm, finish AlZn
No.	Height U	Height mm	Width mm	Depth mm	AlZn PU 2 pieces supplied loose	AlZn PU 2 pieces supplied loose	PU 10 pieces supplied loose	PU 10 pieces supplied loose	PU 5 pieces supplied loose	RAL 7021 PU 2 pieces supplied loose	RAL 7021 PU 2 pieces supplied loose
1	24	1200	600	600	23130-086	23130-333	21120-140	20114-731	60118-472	23130-326	21236-093
2	24	1200	600	800	23130-087					23130-328	
3	24	1200	600	900	23130-088					23130-329	
4	24	1200	600	1000	23130-089					23130-330	
5	24	1200	600	1100	23130-366					23130-331	
6	24	1200	600	1200	23130-367					23130-332	
7	24	1200	800	600	23130-086	23130-334	21120-140	20114-731	60118-472	23130-326	23130-312
8	24	1200	800	800	23130-087					23130-328	
9	24	1200	800	900	23130-088					23130-329	
10	24	1200	800	1000	23130-089					23130-330	
11	29	1400	600	600	23130-086	23130-333	21120-140	20114-731	60118-472	23130-326	21236-093
12	29	1400	600	800	23130-087					23130-328	
13	29	1400	800	600	23130-086	23130-334	21120-140	20114-731	60118-472	23130-326	23130-312
14	29	1400	800	800	23130-087					23130-328	
15	38	1800	600	600	23130-086	23130-333	21120-140	20114-731	60118-472	23130-326	21236-093
16	38	1800	600	800	23130-087					23130-328	
17	38	1800	800	600	23130-086	23130-334	21120-140	20114-731	60118-472	23130-326	23130-312
18	38	1800	800	800	23130-087					23130-328	
19	42	2000	600	600	23130-086	23130-333	21120-140	20114-731	60118-472	23130-326	21236-093
20	42	2000	600	800	23130-087					23130-328	
21	42	2000	600	900	23130-088					23130-329	
22	42	2000	600	1000	23130-089					23130-330	
23	42	2000	600	1100	23130-366					23130-331	
24	42	2000	600	1200	23130-367					23130-332	
25	42	2000	800	600	23130-086	23130-334	21120-140	20114-731	60118-472	23130-326	23130-312
26	42	2000	800	800	23130-087					23130-328	
27	42	2000	800	900	23130-088					23130-329	
28	42	2000	800	1000	23130-089					23130-330	
29	42	2000	800	1100	23130-366					23130-331	
30	42	2000	800	1200	23130-367					23130-332	
31	47	2200	600	600	23130-086	23130-333	21120-140	20114-731	60118-472	23130-326	21236-093
32	47	2200	600	800	23130-087					23130-328	
33	47	2200	600	900	23130-088					23130-329	
34	47	2200	600	1000	23130-089					23130-330	
35	47	2200	600	1100	23130-366					23130-331	
36	47	2200	600	1200	23130-367					23130-332	
37	47	2200	800	600	23130-086	23130-334	21120-140	20114-731	60118-472	23130-326	23130-312
38	47	2200	800	800	23130-087					23130-328	
39	47	2200	800	900	23130-088					23130-329	
40	47	2200	800	1000	23130-089					23130-330	
41	47	2200	800	1100	23130-366					23130-331	
42	47	2200	800	1200	23130-367					23130-332	

RAL 7021 / RAL 7035 Accessories for cabling

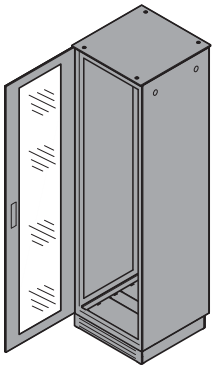

Colour combination RAL 7035 (light grey)/RAL 7021 (black grey)

	Cabinet dimensions				Cable bracket			
					Plastic 31 x 92 mm	Plastic 100 x 100 mm	Steel 100 x 100 mm	Steel 100 x 180 mm
					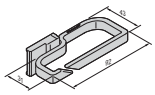	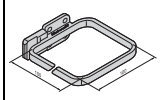	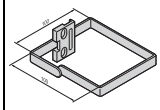	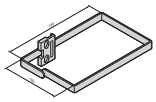
					01012085	01006079	01006081	01006098
					Plastic, PA6, black; to slot into frame	plastic, PA6, black; to clip onto frame	St, zinc-plated, to screw onto frame or 19" panel/ slide mount	St, zinc-plated, to screw onto frame or 19" panel/ slide mount
No.	Height U	Height mm	Width mm	Depth mm	PU 4 pieces enclosed loose	PU 4 pieces supplied loose	PU 4 pieces supplied loose	PU 4 pieces supplied loose
1	24	1200	600	600	23130-506	–	–	–
2	24	1200	600	800				
3	24	1200	600	900				
4	24	1200	600	1000				
5	24	1200	600	1100				
6	24	1200	600	1200				
7	24	1200	800	600	23130-506	23130-336	23130-341	23130-342
8	24	1200	800	800				
9	24	1200	800	900				
10	24	1200	800	1000				
11	29	1400	600	600	23130-506	–	–	–
12	29	1400	600	800				
13	29	1400	800	600	23130-506	23130-336	23130-341	23130-342
14	29	1400	800	800				
15	38	1800	600	600	23130-506	–	–	–
16	38	1800	600	800				
17	38	1800	800	600	23130-506	23130-336	23130-341	23130-342
18	38	1800	800	800				
19	42	2000	600	600	23130-506	–	–	–
20	42	2000	600	800				
21	42	2000	600	900				
22	42	2000	600	1000				
23	42	2000	600	1100				
24	42	2000	600	1200				
25	42	2000	800	600	23130-506	23130-336	23130-341	23130-342
26	42	2000	800	800				
27	42	2000	800	900				
28	42	2000	800	1000				
29	42	2000	800	1100				
30	42	2000	800	1200				
31	47	2200	600	600	23130-506	–	–	–
32	47	2200	600	800				
33	47	2200	600	900				
34	47	2200	600	1000				
35	47	2200	600	1100				
36	47	2200	600	1200				
37	47	2200	800	600	23130-506	23130-336	23130-341	23130-342
38	47	2200	800	800				
39	47	2200	800	900				
40	47	2200	800	1000				
41	47	2200	800	1100				
42	47	2200	800	1200				

Cabinets – VARISTAR Datacom/Networking

RAL 7021 / RAL 7035 Accessories for cabling

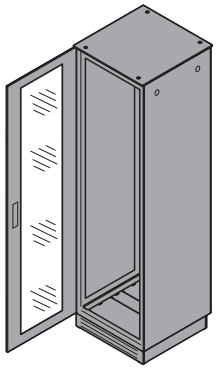

Colour combination RAL 7035 (light grey)/RAL 7021 (black grey)

	Cabinet dimensions				Fibre optic cable bracket	Deposit for excess cable lengths	Cable tie	Velcro
					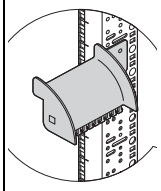	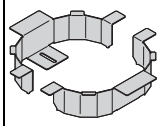	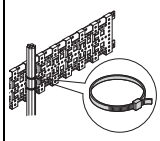	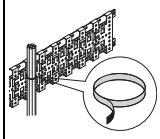
					01006074	01006113	01005078	01005079
					St, 1.5 mm, finish AlZn	for assembly on shelf or depth member	plastic, 92 mm x 2.5 mm, further dimensions see page 1.162	black, length 300 mm, further dimensions see page 1.162
	Height		Width	Depth	PU 2 pieces supplied loose	PU 2 pieces supplied loose	PU 25 pieces supplied loose	PU 10 pieces supplied loose
No.	U	mm	mm	mm				
1	24	1200	600	600	–	23130-050	20118-351	20118-624
2	24	1200	600	800				
3	24	1200	600	900				
4	24	1200	600	1000				
5	24	1200	600	1100				
6	24	1200	600	1200				
7	24	1200	800	600	23130-372	23130-050	20118-351	20118-624
8	24	1200	800	800				
9	24	1200	800	900				
10	24	1200	800	1000				
11	29	1400	600	600	–	23130-050	20118-351	20118-624
12	29	1400	600	800				
13	29	1400	800	600	23130-372	23130-050	20118-351	20118-624
14	29	1400	800	800				
15	38	1800	600	600	–	23130-050	20118-351	20118-624
16	38	1800	600	800				
17	38	1800	800	600	23130-372	23130-050	20118-351	20118-624
18	38	1800	800	800				
19	42	2000	600	600	–	23130-050	20118-351	20118-624
20	42	2000	600	800				
21	42	2000	600	900				
22	42	2000	600	1000				
23	42	2000	600	1100				
24	42	2000	600	1200				
25	42	2000	800	600	23130-372	23130-050	20118-351	20118-624
26	42	2000	800	800				
27	42	2000	800	900				
28	42	2000	800	1000				
29	42	2000	800	1100				
30	42	2000	800	1200				
31	47	2200	600	600	–	23130-050	20118-351	20118-624
32	47	2200	600	800				
33	47	2200	600	900				
34	47	2200	600	1000				
35	47	2200	600	1100				
36	47	2200	600	1200				
37	47	2200	800	600	23130-372	23130-050	20118-351	20118-624
38	47	2200	800	800				
39	47	2200	800	900				
40	47	2200	800	1000				
41	47	2200	800	1100				
42	47	2200	800	1200				

Cabinets – VARISTAR Datacom/Networking ServicePLUS

Cooling solutions for beginners and experts

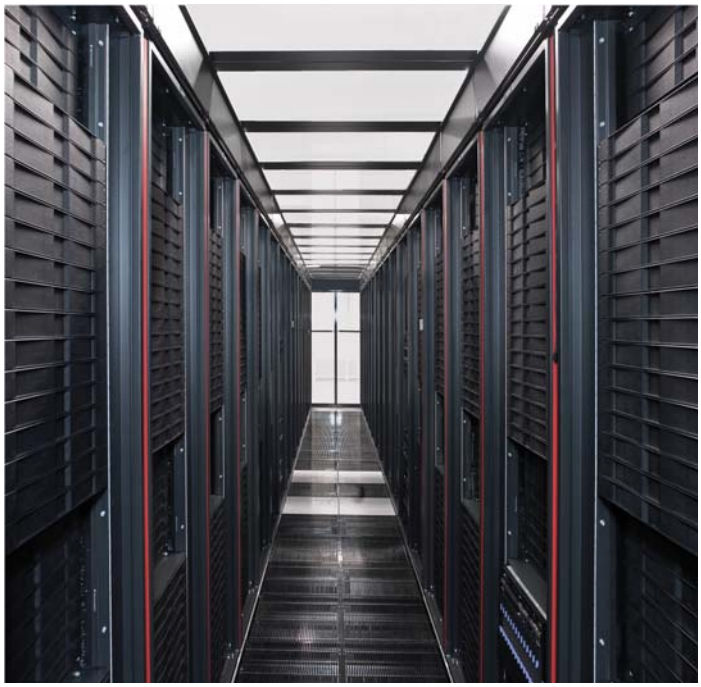

01008024

Cooling solutions for beginners and experts

With Schroff's aisle containment you can boost the cooling efficiency of your data center considerably while simultaneously cutting the energy costs drastically. Consistently separating cold supply air and warm exhaust air produces a high degree of efficiency. Schroff's containment elements can be easily mounted, also subsequently. The cream of the crop: because they go with most cabinet types, you always profit from our innovative solutions.

Schroff's containments - individual applications, safe investments and future-proof

Based on the Schroff Varistar cabinet platform, cold aisle containment systems are simple to create This concept may be adapted or refitted to a location's special room conditions and cooling requirements.

Containments

Cold aisle containment

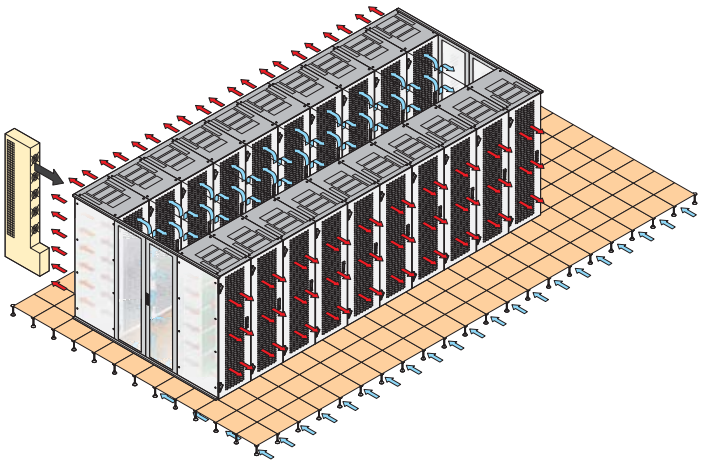

01008074

A high degree of efficiency is reached by the homogeneous distribution of cold air in front of the servers. Radiation losses are lower and the existing room climatisation can be used more efficiently via the double floor. If necessary, the cooling capacity in the cold aisle can be expanded with LHX air/water heat exchangers. By relieving the room air-conditioning, redundancy increases.

Cabinets – VARISTAR Datacom/Networking ServicePLUS

Requirements and solutions for containments

01008025

01008031

Requirements

- New data centre for an international bank in a hosting centre
- Constant homogenous cool air for all servers with low energy consumption
- Future proof in cooling, power and cable management
- User friendly for facility management and IT

The solution

- Cold aisle containment to reduce energy consumption
- Automated fully double-glazed doors minimise cold air loss
- Perforated base plates throughout for maximum passage of air
- Transparent roof elements allow room lighting to be used
- Higher positioning of roof elements for increased headroom and sense of space
- Cable duct integrated into roof elements, accessible from cold aisle
- Separate cable panel on cabinet top covers

Content

Cabinets 1

Wall mounted cases 2

Accessories for cabinets and wall mounted cases . 3

Climate control . 4

Electronics cases 5

Subracks/ 19" chassis 6

Front panels, plug-in units . . . 7

Systems 8

Power supply units 9

Backplanes . . . 10

Connectors, front panel component system 11

Appendix 12

Cabinets – VARISTAR containment

01012006

The Schroff containment system lets you create containment installations without problems. Increase efficiency and cut energy costs

- Consistent separation of cold and hot air
- Overpressure in the containment: Blow-in temperature of air conditioner is almost the same as the temperature in front of the servers
- No temperature layering in front of the 19" plane inside the containment
- No subcooling: possibilities to optimize temperature in data centres
- Higher packing density per cabinet is possible with the same climate control elements
- Low investment with short ROI - no maintenance costs

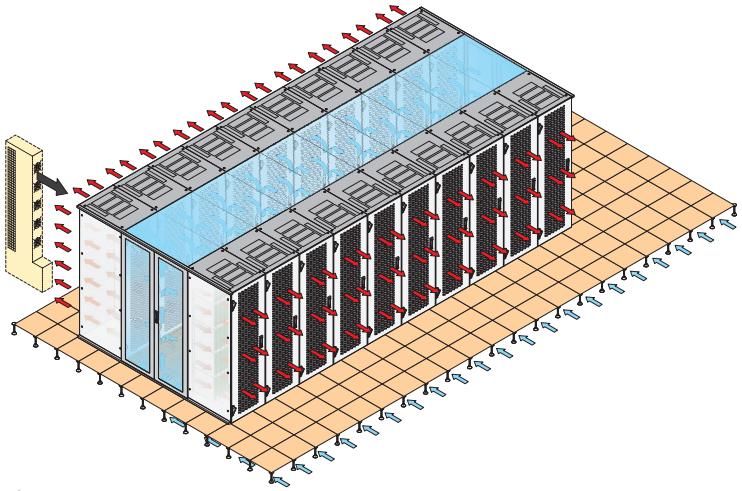

Cold aisle containment

Cabinets – VARISTAR containment

Overview 1.202

Containment of VARISTAR cabinets

- Modular standard components enable flexible adaptation to the requirements of your IT
- Base system simple to combine and modify
- Minimal investment risk thanks to completely matched climate control system
- Short implementation time with minimum outlay

VARISTAR
Platform 1.4
Dimensions 1.8

01014007

Varistar containment system

- Preconfigured containment solution from modular standard components (consisting of 6 Varistar server cabinets, RAL 7021, height 2000 mm, width 800 mm, depth 1200 mm) including containment components; containment aisle width 1200 mm)
- Simple to expand or to use as the configuration basis for your individual containment solution
- Can be delivered in 10 working days

Containment system 1.204

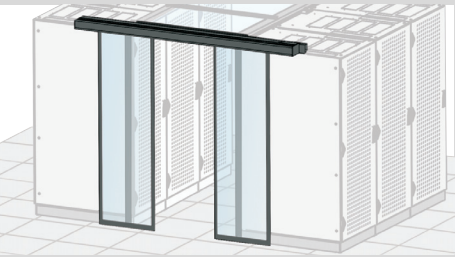

01012073

Doors

- Standard solutions for 2000 mm and 2200 mm high cabinets
- Swing doors
- Sliding doors
  - Mechanical
  - Electronic

Doors
Swing doors 1.205
Sliding doors, mechanical, Touch variant 1.205
Sliding door, electronic 1.207

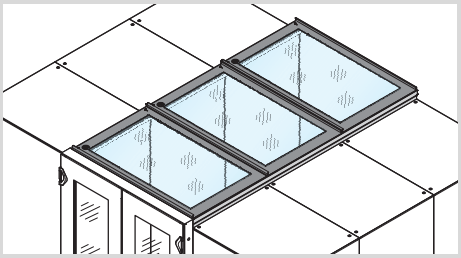

01012074

Top covers

- Standard solutions for aisle width 1200 mm
- For 600 mm and 800 mm wide cabinets
- Integration of cabinets with other dimensions (heights)
- Free aisle height can be raised by 84 mm

Top covers
Top cover elements 1.208

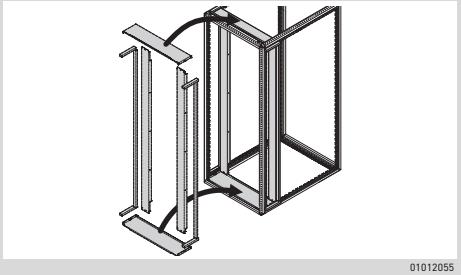

01012055

Air partitioning

- For server and network cabinets
- For cabinets with different widths and recessed 19" planes
- Solid covers with cable ducting or cable routing (cable fingers, cable channels)
- Halogen-free gasketing UL 94 HF-1

Air partitioning . 1.211

3040704

ServicePLUS from page 1.215

e.g. set-up service and commissioning
e.g. custom modifications and developments
e.g. free combination of components

www.schroff.biz/ServicePLUS

ServicePLUS ... 1.215

VARISTAR
Electronics 1.10
VARISTAR
EMC 1.54
VARISTAR
Seismic 1.84
VARISTAR
Datacom and Networking Technology 1.124
VARISTAR
Air/water heat exchangers 1.224

Cabinets – VARISTAR containment

Varistar Containment Systems

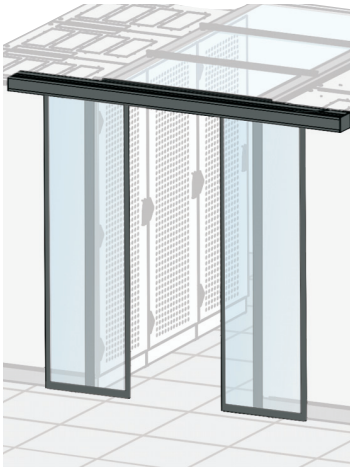

Sliding containment door, mechanical, touch

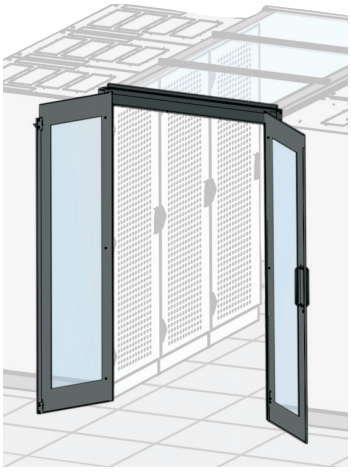

Swing containment door

- Preconfigured containment solutions from modular standard components
- Simple to expand or to use as the configuration basis for your individual containment solution
- Consists of 6 Varistar server cabinets (height 2000 mm, width 800 mm, depth 1200 mm) including containment components
- Containment aisle width 1200 mm, all components in RAL 7021
- Can be delivered in 10 working days

Delivery includes

Item	Qty	Description
1	6	Welded basic frame, Slim-Line, St profile, zinc-plated, powder-coated, RAL 7021
2	24	Adjustable foot
3	6	Flat top cover, raised, St, RAL 7021, cutouts for brush strip mounting
4	12	Brush strip for cable entry to flat top cover
5	6	Front door, St, RAL 7021, with 180° hinges and perforation, 3-point locking and lever handle
6	6	Rear door, double door, St, RAL 7021, with 180° hinges and perforation, 3-point locking and lever handle
7	24	Cross member, RAL 7021, to accept 19" panel/slide mounts
8	24	19" panel/slide mounts, RAL 7021, mounted at 75 mm intervals
9	12	Air baffle, St, RAL 7021, with brush strip for cable ducting
10	24	Central C rail for lateral cable routing in cabinet
11	48	Steel cable bracket
12	4	Side panel, screw-fixed, for aisle closure, St, RAL 7021
13	1	Sliding containment doors, mechanical, Al extruded frame, 10 mm laminated safety glass, sliding mechanism and rail, fixing materials kit
14	1	Swing containment doors, St frame, 1.5 mm, with 6 mm single pane safety glass and 180° hinges
15	1	Top containment covers, frame St, 2 mm, RAL 7021, 7 mm laminated safety glass, length 1200 mm
16	6	Fixing materials for top cover universal profile
17	2	Top cover universal profile, Al, length 2400 mm, RAL 7021
18	4	Side-by-side mounting kit for cabinets
19	1	Containment gasketing kit
20	1	Separator for adjustable cabinet foot

Order Information

Description	Part no.
Varistar Containment Systems	10130-250

Cabinets – VARISTAR containment

Swing doors

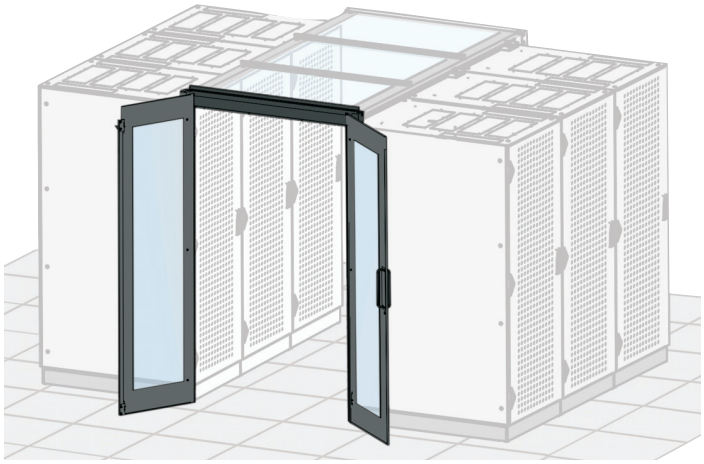

- Suitable for 2000 and 2200 mm high cabinets
- Double doors suitable for an aisle width of 1200 mm
- 2 colours
  - Black grey (RAL 7021)
  - Light grey (RAL 7035)

Delivery comprises

Item	Qty	Description
1	2	Frame St, 1.5 mm; with single pane safety glass 6 mm and 180° hinge, 2-point magnetic locking on main door, bolt on side door to lock into the floor
2	1	Fixing material kit (for cabinet side)

Order Information

Description	Colour	Part no.
Swing doors	RAL 7021	21130-583
Swing doors	RAL 7035	22130-583
Accessories		
Door locking PU 1 pieces		23130-437
Door cover mask for unequal aisle heights		**Page 1.216**

Note

- Please order suitable door cover masks (above the door) separately
- Optional lever handle with lock on request

Accessories

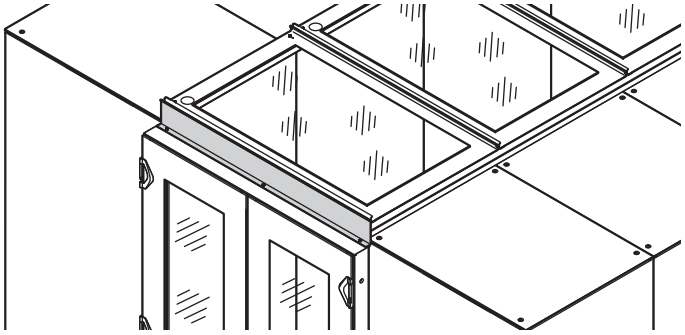

Door cover mask

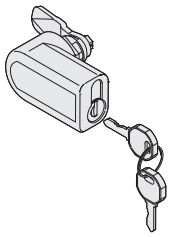

Lock

Sliding door, mechanical, Touch variant

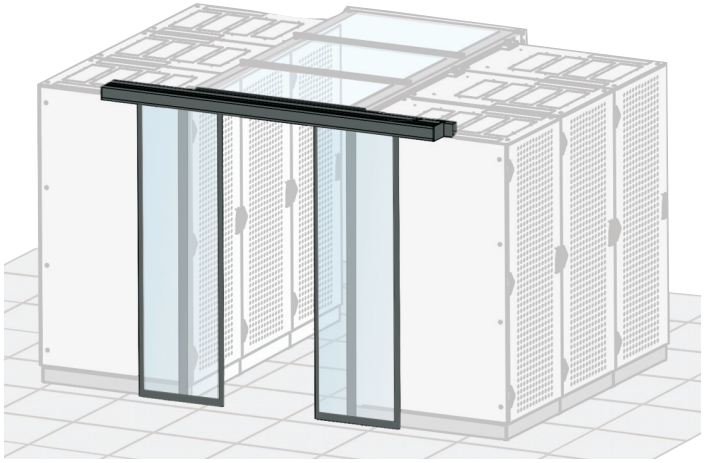

- Suitable for 2000 and 2200 mm high cabinets
- Doors open symmetrically (both wings open at same time); door catch with magnet (door stays open); closes automatically when lightly tapped
- Double doors suitable for an aisle width of 1200 mm
- Colour black grey (RAL 7021)

Delivery comprises

Item	Qty	Description
1	2	Sliding door, frame Al extrusion; laminated safety glass 10 mm, sliding gear
2	1	Slide rail with front trim
3	1	Fixing material kit (for cabinet side)

Order Information

Description	Part no.
Sliding door, mechanical, Touch variant version	21130-060
Accessories	
Reed contact 1 piece	60130-065
Door seal cover for various aisle heights	**Page 1.217**

Note

- Please order suitable door cover maskSs (above the door) separately

Accessories

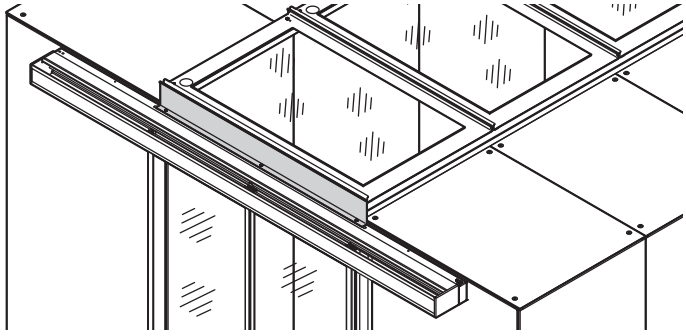

Door cover mask

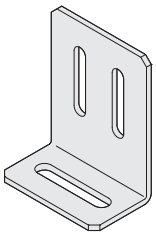

Assembly kit

Cabinets – VARISTAR containment

Sliding door, electronic

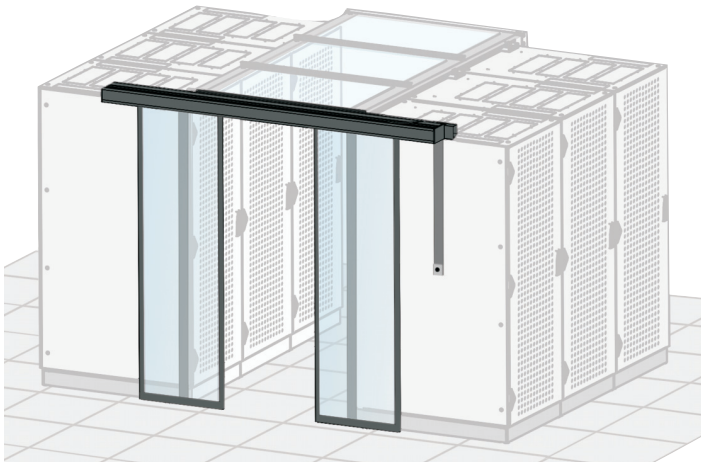

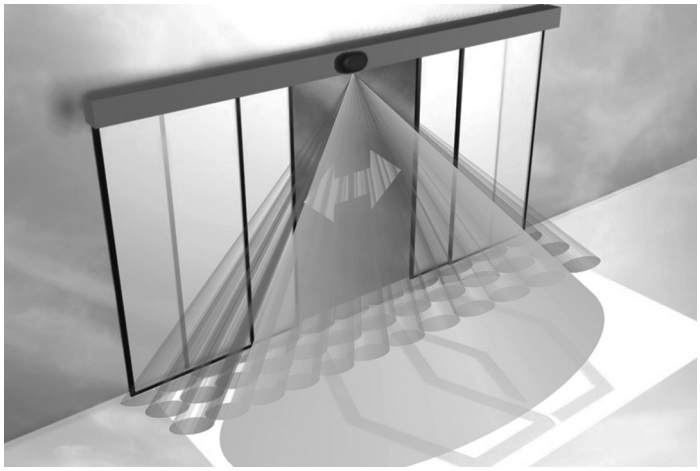

Optional door opening with motion sensor

- Suitable for 2000 and 2200 mm high cabinets
- Door is opened/closed using a button (outside and inside); manually in case of power failure
- Double doors suitable for an aisle width of 1200 mm
- Colour black grey (RAL 7021)
- Optional door activation with motion sensor or operator unit with access control

Delivery comprises

Item	Qty	Description
1	2	Sliding door, frame Al extrusion; laminated safety glass 10 mm, door sliding gear, connector cable and button to operate door
2	1	Slide rail with front trim
3	1	Fixing material kit (for cabinet side)

Order Information

Description	Part no.
Sliding door, electronic	21130-073
Accessories	
Reed contact 1 piece	60130-065
Battery pack 1 piece	60130-066
Motion detector 1 piece	60130-067
Door seal cover for various aisle heights	**Page 1.218**

Note

- Please order suitable door cover masks (above the door) separately
- An assembly kit is required for cabinet height 2200 mm with base/plinth, please order separately
- The door system must be maintained and inspected regularly

Accessories

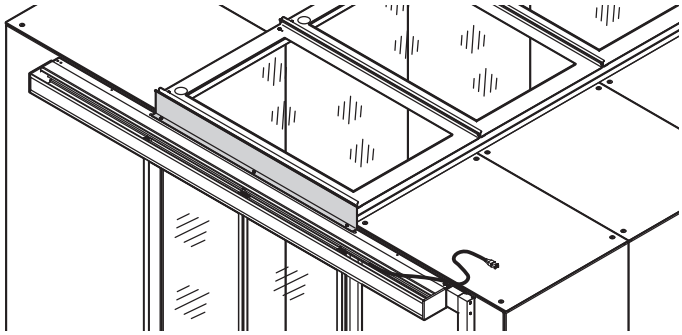

Door cover mask

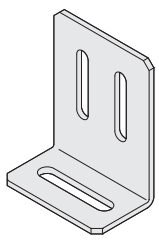

Assembly kit

Top cover elements

01008024

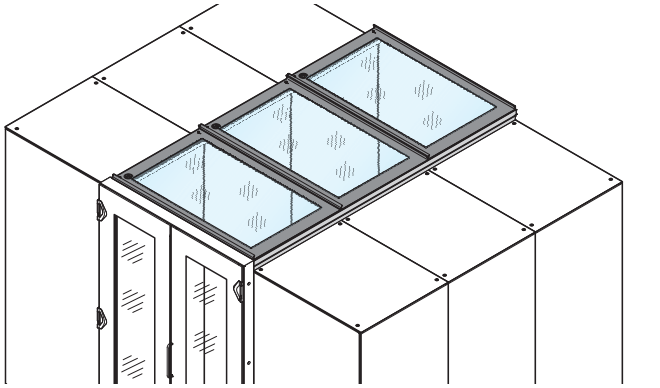

01012074

- Suitable for an aisle width of 1200 mm
- Top cover with safety glass (VSG)
- For cabinet widths 600 and 800 mm
- A top cover profile can raise the aisle height by 84 mm; please order separately
- Top cover can be removed from inside (allows access to lighting and facilitates maintenance works)

Delivery comprises

Item	Qty	Description
1	1	Frame St, 2 mm, RAL 7021; safety glass (VSG) 7 mm, length 1200 mm
2	1	Fixing material kit

Order Information

Description	For cabinet width mm	Part no.
Top cover elements	600	21130-588
Top cover elements	800	21130-589
Accessories		
Top cover profile Length 2400 mm, PU 2 pieces		21130-594
Assembly kit bracket for top cover raising profile, PU 6 pieces		23130-433

Note

- Where a mechanical sliding door is used, the top cover directly beside the door must be 100 mm narrower,
see page 1.205

Universal profile to raise top cover

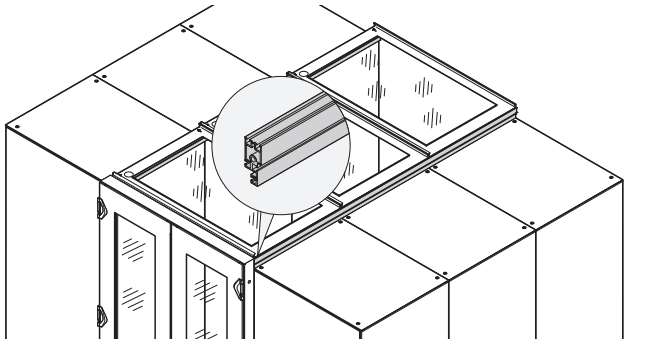

01012051

Application with raised top covers

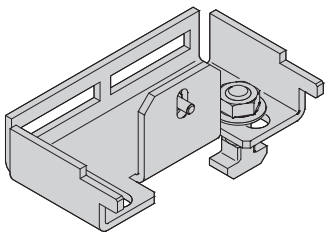

01012052

Accessory: Assembly kit to mount universal top cover profile

- The top cover elements can be raised by 84 mm using a profile
- Integration of cabinets with other dimensions
- The profile has a T-groove on the inside that allows lamps, sensors, etc, to be mounted easily

Delivery comprises

Item	Qty	Description
1	2	Al extrusion, RAL 7021, length 2400 mm

Order Information

Description	Part no.
Universal top cover profile,, height 84 mm	21130-594
Accessories	
Assembly kit Bracket for universal top cover profile, PU 6 pieces	23130-433

Note

- To mount a profile, an assembly kit (2 pieces) is required; please order separately

Cabinets – VARISTAR containment

Automatic enclosure top covers

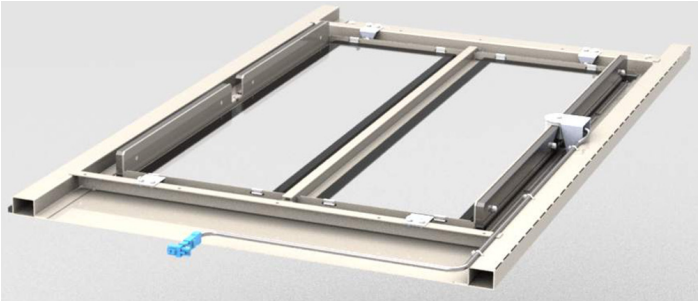

01017054

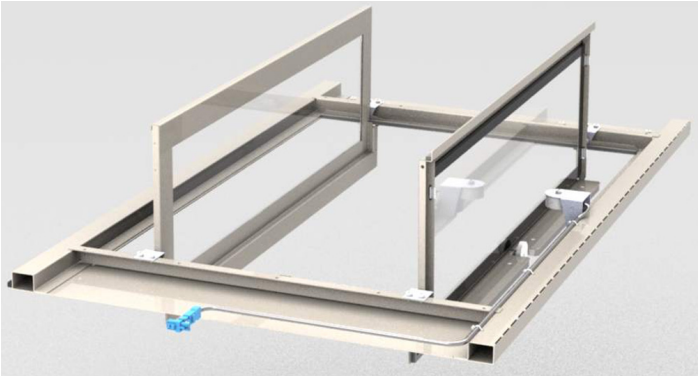

01017053

- Automatic containment top covers open automatically in the event of fire so that the sprinkler systems installed above the containment top cover can put out the fire. In normal operation, the top covers are kept closed by electromagnets and open when the floating contact of the fire detection system is opened
- Suitable for an aisle width of 1200 mm
- For cabinet widths of 600 or 800 mm
- Top cover with safety glass, 7 mm
- With the universal top cover profile, the aisle height can be increased by 84 mm; please order separately
- The top cover can be removed from the inside. When opened, the top cover provides access to lighting and sprinkler systems above the containment system for maintenance work
- Please order the control unit, which can be used to control up to 12 automatic top covers, separately
- A 24 V_{DC} power supply unit is required to operate the system. Please order separately

Delivery includes

Item	Qty.	Description
1	1	Frame, St, 2 mm, RAL 7021; 7 mm laminated safety glass, length 1200 mm, electromagnet with 1200 mm connection cable
2	1	T-shaped connecting plug
3	1	Fixing materials kit

Order Information

Description	Part no.
Automatic containment top cover, width 600 mm	21130-592
Automatic containment top cover, width 800 mm	21130-593
Accessories	
Raised top cover Length 2400 mm, PU 2 pieces	21130-594
Assembly kit Bracket for universal top cover profile, PU 6 pieces	23130-433
Control unit for automatic top covers 1 set	23130-205
Power supply for control unit For power distribution of up to 12 automatic top covers, input 100 to 240 V_{AC}, output: 24 V_{DC}, 40 W, 1 piece	23130-227
Connecting/extension cable, 1 m	23130-206
Connecting/extension cable, 2 m	23130-207
Connecting/extension cable, 5 m	23130-226

Control unit for automatic top covers

01017002

- Control unit for up to 12 automatic top covers
- Inputs:
  - External 24 V_{DC} power supply unit required, please order separately
  - 2 floating contacts for connecting to a fire detection system and another opening/test button
- Output: 24 V_{DC} connection for the control and voltage supply of up to 12 automatic enclosure top covers, which can be connected in series

Order Information

Description	Part no.
Control unit for automatic top covers	23130-205

Adaptors for cable routing

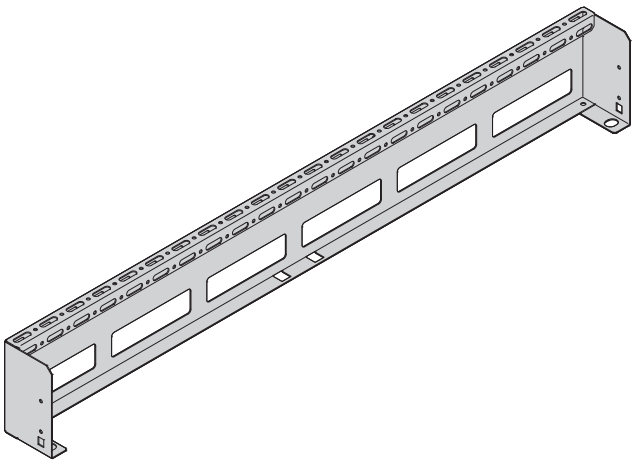

01012075

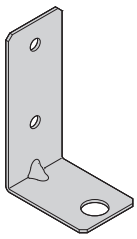

01012076

Mounting bracket for cable route adaptor

- Suitable for VARISTAR cabinets and all common cable panel systems

Delivery comprises

Item	Qty	Description
1	2	St profile, RAL 7021

Order Information

Description	For cabinet depth mm	Part no.
Cable route adaptor	1000	**21130-596**
Cable route adaptor	1200	21130-597
Accessories		
Mounting bracket for cable route adaptor Bracket, St, PU 2 pieces		21130-598

Note

- Mounting bracket for cable route adaptor is required for containment without universal top cover profile

Cabinets – VARISTAR containment

Covers

Covers for 800 mm wide cabinets with adapter bracket for reduced width

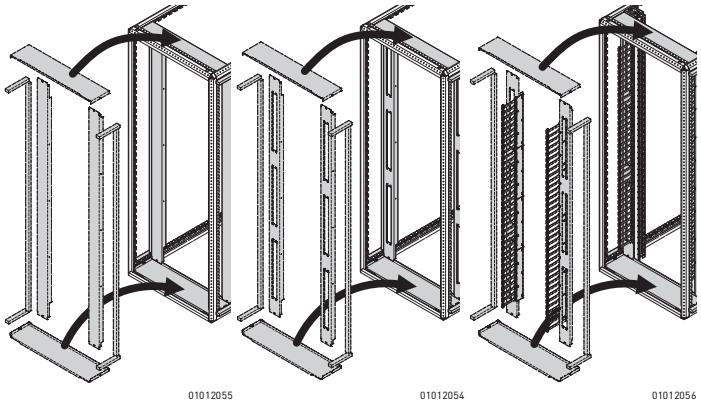

Covers solid, width 800 mm | Cover with lateral cut-outs | Cover with cable finger/cable channel

Covers for 800 mm wide cabinets with cross member

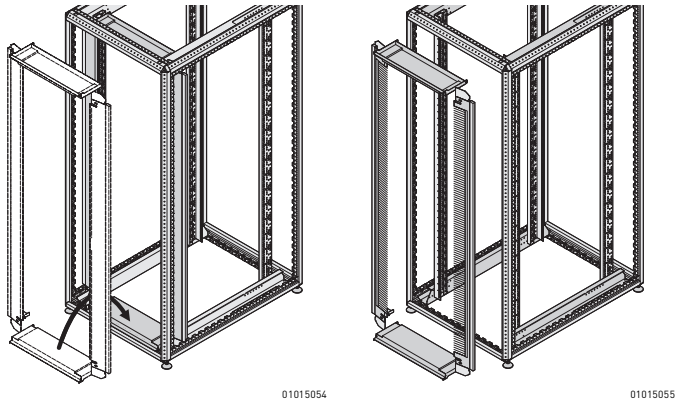

Covers, width 800 mm | Cover with lateral cut-outs

- All around the front, covers prevent unwanted air short-circuits,
  i.e. the mixture of warm exhaust air with cold inbound air
- For cabinet width 600 or 800 mm, for cabinet height 42 or 47 U
- Versions for installation with adapter bracket for reduced width or cross member
  - Solid covers
  - Covers for 800 mm wide cabinets with cut-outs for cable routing
  - Covers with vertical cable fingers for 800 mm wide cabinets
  - Cable routing with cable channel (hinged cover at front) for 800 m wide cabinets
- Suitable divider plates are available for 19" planes mounted with
  recess (70, 145, 220 mm)
- Network and server cabinets can be arranged side by side
- Gaskets, UL 94 HF-1, -20 °C ... 100° C

Delivery comprises

Item	Qty	Description
1a	2	Cover, St, 1 mm, RAL 7021, left/right (at 600 mm width only gaskets instead of covers)
2	1	Cover, top, St, 1 mm, RAL 7021
3	1	Cover, bottom, St, 1 mm, RAL 7021
4	1	Fixing material kit, gaskets, user manual

Order Information

Height		Covers for front air separation	For 600 mm wide cabinets	For 800 mm wide cabinets with adapter bracket for reduced width				For 800 mm wide cabinets with cross member	
				Solid cover	Cover with lateral cut-outs for cables	Cover with cable fingers	Cover with cable panels	Solid cover	Cover with lateral cut-outs for cables
U	mm		Part No.	Part No.	Part No.	Part No.	Part No.	Part No.	Part No.
42	2000	for 70 mm recessed 19" plane	**21130-624**	21130-627	21130-629	–	–	23130-550	23130-558
42	2000	for 145 mm recessed 19" plane	21130-618	21130-631	21130-620	–	–	23130-550	23130-558
42	2000	for 220 mm recessed 19" plane	21130-622	21130-633	21130-623	21130-636	21130-638	23130-550	23130-558
47	2200	for 70 mm recessed 19" plane	**21130-625**	21130-628	21130-630	–	–	23130-551	23130-559
47	2200	for 145 mm recessed 19" plane	21130-619	21130-632	21130-621	–	–	23130-551	23130-559
47	2200	for 220 mm recessed 19" plane	21130-626	21130-634	21130-635	21130-637	21130-639	23130-551	23130-559

Accessories	
Lateral 19" baffle plates for 42 U cabinets, for lateral termination in depth of 70 mm, PU 1 piece	21130-640
Lateral 19" baffle plates for 42 U cabinets, for lateral termination in depth of 145 mm, PU 1 piece	21130-642
Lateral 19" baffle plates for 47 U cabinets, for lateral termination in depth of 70 mm, PU 1 piece	21130-641
Lateral 19" baffle plates for 47 U cabinets, for lateral termination in depth of 145 mm, PU 1 piece	21130-643
Brush strip for closing the open cable through-ducting opening, 1 U, black, PU 6 pieces	23130-153
Clip-on 19" plastic front panels to close the open cable through-ducting opening of the lateral cladding parts , 1 U, black, PU 10 pieces	**D19BPT1RU**

Basic kit for side-to-side-cooled switches

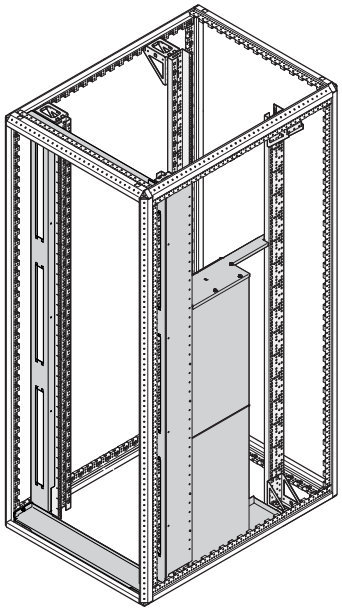

01013067

- Basic kit to divide the 19" plane in the front part of the cabinet and to accept side trims for switches
- For 800 mm wide VARISTAR cabinets
- with 145 mm recessed 19" plane
- Right front bezel with 5 x air inlets; air inlets that are not required can be closed with easy-to-cut gasketing material
- Left front bezel for back-to-back cabling with 3 x 19"/1 U cut-outs (please order brush strips and filler panels separately)
- Kit can also be retrofitted to cabinets already installed in rows

Delivery includes

Item	Qty	Description
1	2	Front frame, St, 1 mm, RAL 7021 (for top and bottom)
2	1	Cover, left, St, 1 mm, RAL 7021 (3 openings)
3	1	Cover, right, St, 1 mm, RAL 7021 (5 openings)
4	1	Base, St, 1 mm, AlZn, for Cisco side trim
5	1	Top cover, St, 1 mm, AlZn, for Cisco side trim
6	6	Gasketing (can be cut as required for air inlets)
7	1	Fixing materials kit, gasketing, user manual

Order Information

For cabinet height U	For cabinet height mm	For cabinet width mm	Part no.
42	2000	800	21130-646
47	2200	800	21130-647
Accessories			
Side trims for Cisco switches for Cisco Switch 4503, side trim AlZn, 1 mm, 1 kit			23130-490
Side trims for Cisco switches for Cisco Switch 4506, side trim AlZn, 1 mm, 1 kit			23130-491
Side trims for Cisco switches for Cisco Switch 4507, side trim AlZn, 1 mm, 1 kit			23130-492
Side trims for Cisco switches for Cisco Switch 4510, side trim AlZn, 1 mm, 1 kit			23130-493
Side trims for Cisco switches for Cisco Switch 6506, side trim AlZn, 1 mm, 1 kit			23130-494
Side trims for Cisco switches for Cisco Switch 6509, side trim AlZn, 1 mm, 1 kit			23130-495
Side trims for Cisco switches for Cisco Switch 6510, side trim AlZn, 1 mm, 1 kit			23130-496
Clip-on 19" plastic front panels to close the open cable through-ducting opening of the lateral cladding parts 1 U, black, PU 10 pieces			D19BPT1RU
Brush strip for closing the open cable through-ducting opening 1 U, black, PU 6 pieces			23130-153

Note

- Please order appropriate quantity and suitable Cisco switch side trims separately
- Cover for lateral cable through-ducting openings (please order brush strip and 19" front panel separately)

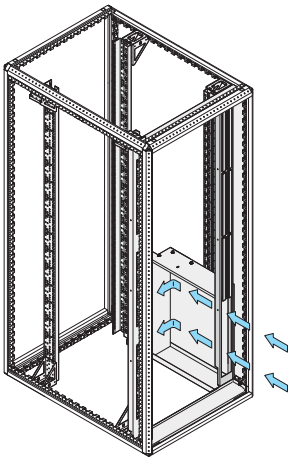

01013066

Cisco switches side trims

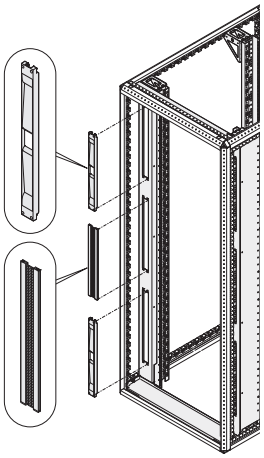

01013060

19" plastic front panels, brush strips to close cable ducting openings

Cabinets – VARISTAR containment

Separating walls

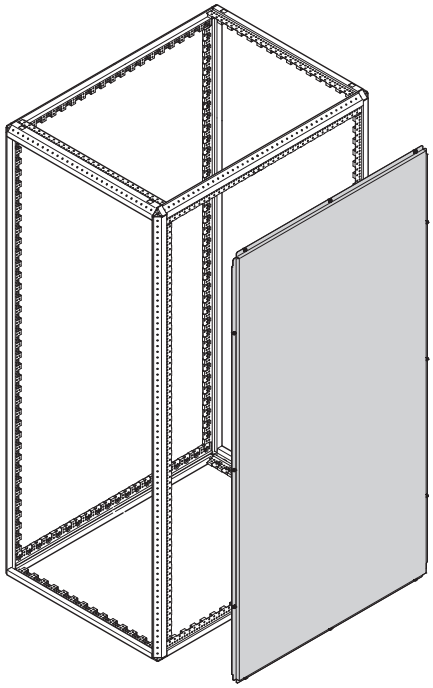

01012058

- Where cabinets are arranged in rows the separating wall replaces the cabinet side wall
- Mounts laterally, prevents unauthorised access
- For cabinet height 42 or 47 U and cabinet depth 1000 mm or 1200 mm

Delivery comprises

Item	Qty	Description
1	1	Separating wall, St, 1 mm, finish AlZn
2	1	Fixing material kit, user manual

Order Information

For cabinet height U	For cabinet depth mm	Part no.
42	1000	23130-480
42	1200	23130-481
47	1000	23130-484
47	1200	23130-485

Gasketing

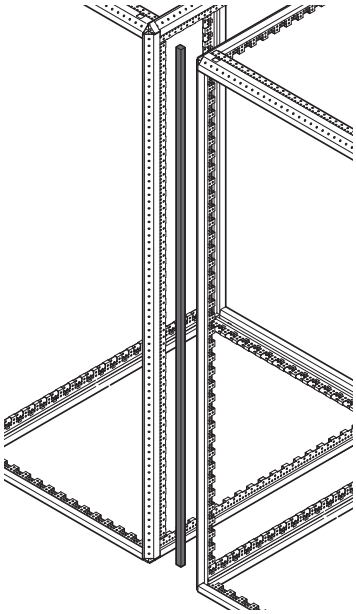

Vertical gasket

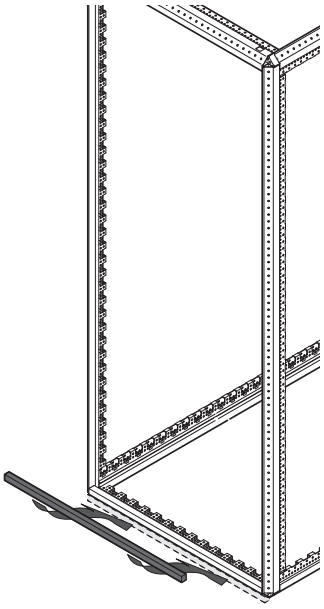

Horizontal gasket

- Gasketing kits to seal front against air short-circuits

Delivery comprises

Item	Qty	Description
1	1	Gasket, halogen-free
2	1	User manual

Order Information

Description	Length mm	Part no.
Vertical gasket for vertical sealing between 10 cabinets	3000	23130-475
Horizontal gasket for two 600 mm wide cabinets with adjustable feet	1200	23130-477
Horizontal gasket for two 800 mm wide cabinets with adjustable feet	1600	23130-478

Cabinets – Varistar ServicePLUS containment

Configuration aid for aisle containment

- For cabinet rows
  - Cabinet height 2000 and 2200 mm
  - Aisle width 1200 mm
  - Cabinet width 600 mm and 800 mm
- Colour RAL 7021, swing door also in RAL 7035
- Configure your containment system from individual components
- Once you have selected the desires cabinet containment height, the row number (first column of the configuration tables) guides you through all subsequent configutations pages that apply to these dimensions (see example below)
- Assembly on request

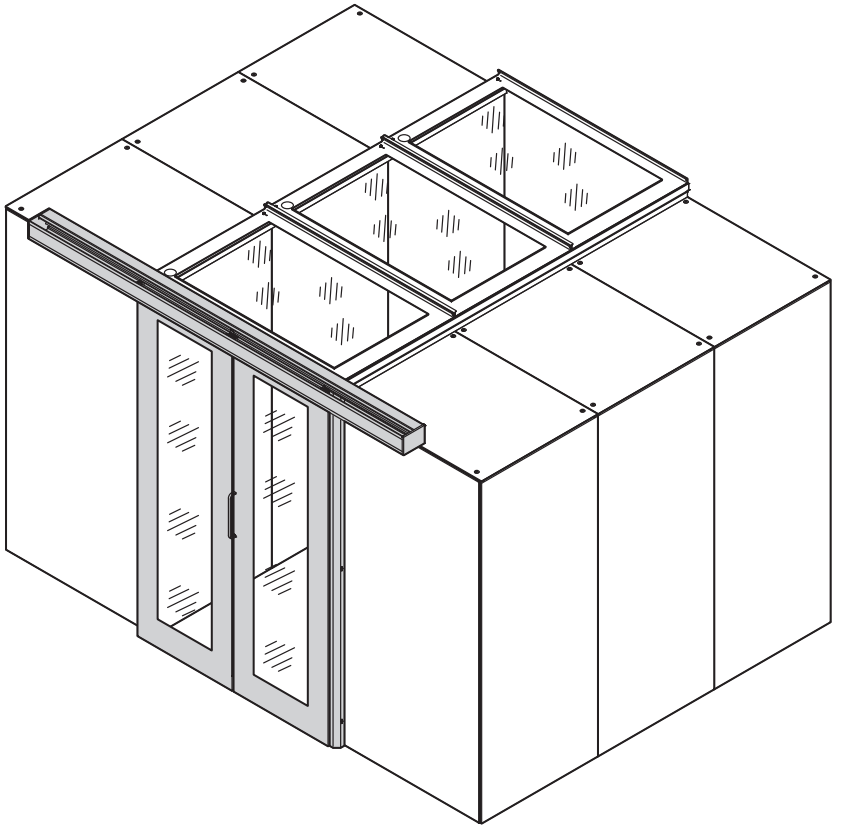

Example 6 cabinet containment cells (here: row 6)

Qty	Description	Order no.
6	Side-to-side cabinet, 47 U, 2200 mm high, 800 mm wide, 1200 mm deep, with front and rear door, RAL 7021, 1 piece (see chapter VARISTAR data/network systems)	10130-233
2	Side panel screw fixed, height 47 U - 2200 mm, for cabinet depth 1200 mm, RAL 7021, PU 2 pieces (see chapter VARISTAR data/network systems)	22130-537
1	Sliding door, mechanical, for cabinet height 2200 mm, aisle height 2102 mm, with adjustable foot + top cover raising element, 1 piece	21130-060
1	Door cover mask to equalize aisle height, 1 piece	21130-612
3	Top cover, for cabinet width 800 mm, aisle width 1200 mm, 1 piece	21130-589
1	Universal top cover profile, length 2400 mm, height 84 mm, PU 2 pieces	21130-594
1	Assembly kit for universal top cover profile, PU 6 pieces	23130-433
5	Cover, for lateral termination, 70 mm recessed, PU 1 kit	21130-638
5	Cover with lateral cutouts, by 145 mm recessed 19" plane, PU 1 kit	21130-632
2	Cover for lateral termination, depth-offset 70 mm, 1 piece	21130-643
..	.....	.....

	Page
Folding doors	1.216
Sliding door (touch), mechanical	1.217
Automatic sliding doors	1.218
Top covers	1.219
Cable panel adapter, covers beside 19" plane, solid	1.221
Covers beside 19" plane, 800 mm, with adapter bracket for reduced width	1.222
Covers with cable ducting, cable finger, cable channel	1.223
Cover for various 19" installation depth, separating wall	1.224
Airflow for side-to-side-cooled switches	1.224
Separating wall, gasketing kits	1.226
Configuration of SHX 30 air/water heat exchanger	1.227

Swing doors

Order Information

				Swing door			
				RAL 7021	RAL 7035	Cover	Door locking
				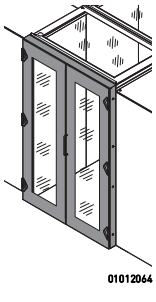 01012064	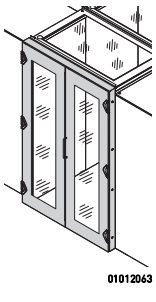 01012063	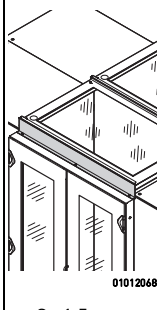 01012068	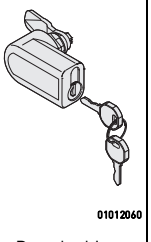 01012060
				Frame, St, with single pane safety glass 6 mm and 180° hinge, 3-point loking and lever handle (please order lock separately), door cover mask to equalise aisle height, 1 piece		St, 1.5 mm, RAL 7021; cover to equalise aisle height	Door locking mechanism
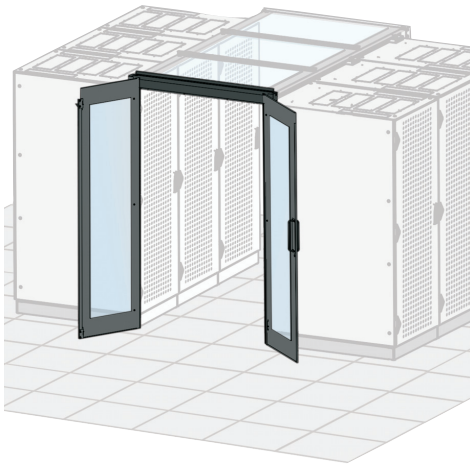 01012070							
	For cabinet height H		Aisle height (lower edge)	Raising elements			
No.	U	mm	mm		PU 2 pieces	1 piece	1 piece	1 piece
1	42	2000	2018	Adjustable feet	21130-583	22130-583	–	23130-437
2			2102	Adjustable feet + raised top cover				
3			2108	Base/plinth				
4			2192	Base/plinth + raised top cover				
5	47	2200	2218	Adjustable feet	21130-583	22130-583	21130-611	23130-437
6			2302	Adjustable feet + raised top cover			21130-612	
7			2308	Base/plinth			21130-612	
8			2392	Base/plinth + raised top cover			21130-613	

Cabinets – Varistar ServicePLUS containment

Sliding doors (touch), mechanical

Order Information

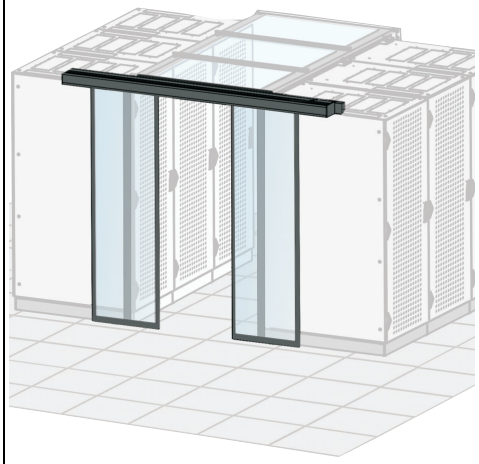
01012062

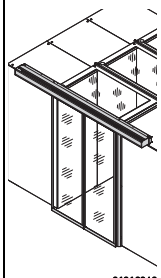
01012062

Sliding door, frame St, with single pane safety glass 6 mm, closes automatically

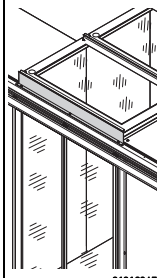
01012067

Door cover mask to equalise aisle height, 1 piece

01015001

Prepared for integration into door boxes, magnet detects when door is opened; connects to door plate

No.	For cabinet height H U	mm	Aisle height (lower edge) mm	Raising elements	Hand operated sliding door, touch RAL 7021 PU 2 pieces	Cover 1 piece	Reed contact 1 piece
1	42	2000	2018	Adjustable feet	21130-060	–	60130-065
2			2102	Adjustable feet + raised top cover			
3			2108	Base/plinth			
4			2192	Base/plinth + raised top cover			
5	47	2200	2218	Adjustable feet	21130-060	–	60130-065
6			2302	Adjustable feet + raised top cover		21130-040	
7			2308	Base/plinth		21130-040	
8			2392	Base/plinth + raised top cover		21130-059	

Automatic sliding doors

Order Information

				Automatic sliding door				
				RAL 7021	Cover	Reed contact	Motion detector	Battery pack
	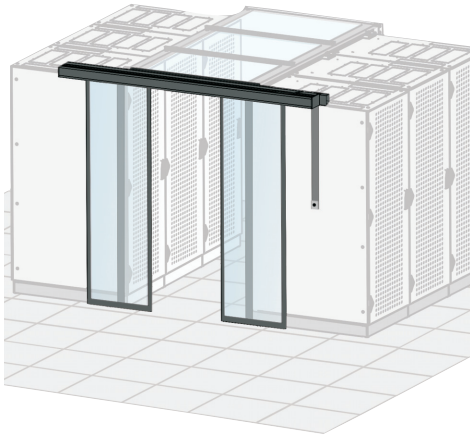 01012073			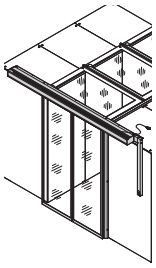 01012061	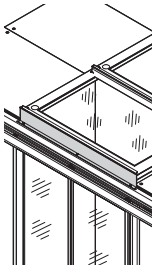 01012069	01015001	01015003	01015002
				Sliding door, frame, St, with single pane safety glass 6 mm, closes electrically by pushbutton	Door cover mask to equalise aisle height, 1 piece	Prepared for integration into door boxes, magnet detects when door is opened; connects to door plate	Prepared for mounting on door box, power supply via connector on door plate	Prepared for integration into door boxes
No.	For cabinet height H U	mm	Aisle height (lower edge) mm	Raising elements	PU 2 pieces	1 piece	1 piece	1 piece	1 piece
1	42	2000	2018	Adjustable feet	21130-073	–	60130-065	60130-067	60130-066
2			2102	Adjustable feet + raised top cover					
3			2108	Base/plinth					
4			2192	Base/plinth + raised top cover					
5	47	2200	2218	Adjustable feet	21130-073	–	60130-065	60130-067	60130-066
6			2302	Adjustable feet + raised top cover		21130-040			
7			2308	Base/plinth		21130-040			
8			2392	Base/plinth + raised top cover		21130-059			

Cabinets – Varistar ServicePLUS containment

Top covers

Order Information

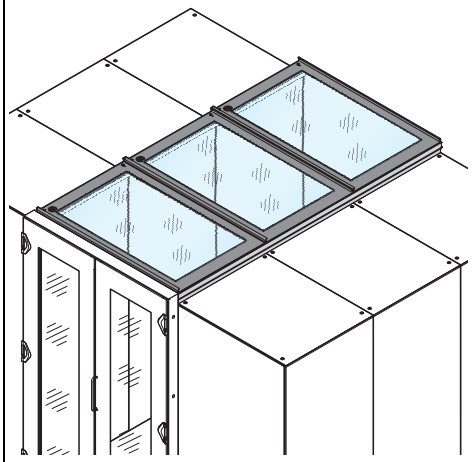

No.	For cabinet height H U	mm	Aisle height (lower edge) mm	Raising elements	Top cover 600 mm width	Top cover 800 mm width	Universal profile to raise top cover	Assembly kit
					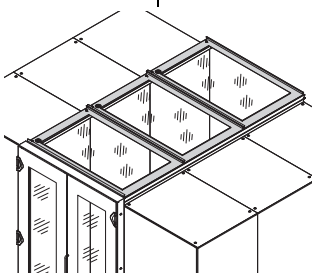 01012050 Frame, St; with single pane safety glass 7 mm, aisle width 1200 mm		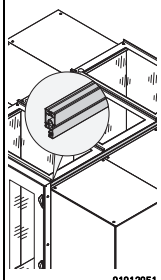 01012051 Al extrusion, RAL 7021, length 2400 mm, height 84 mm	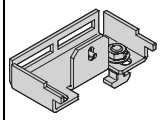 01012052 Bracket to mount the universal top cover profile
					1 piece	1 piece	PU 2 pieces	PU 6 pieces
1	42	2000	2018	Adjustable feet	21130-588	21130-589	–	–
2			2102	Adjustable feet + raised top cover			21130-594	23130-433
3			2108	Base/plinth			–	–
4			2192	Base/plinth + raised top cover			21130-594	23130-433
5	47	2200	2218	Adjustable feet	21130-588	21130-589	–	–
6			2302	Adjustable feet + raised top cover			21130-594	23130-433
7			2308	Base/plinth			–	–
8			2392	Base/plinth + raised top cover			21130-594	23130-433

Automatic fan top covers

Order Information

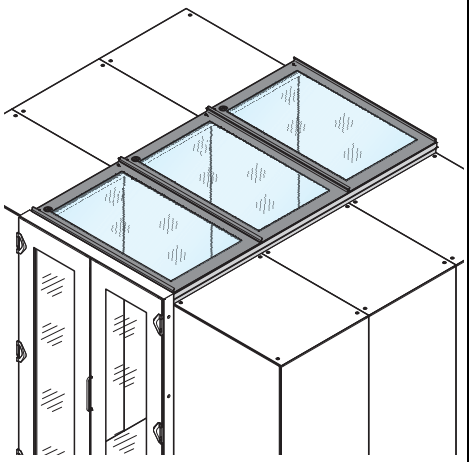

01012074

No.	For cabinet height H U	mm	Aisle height (lower edge) mm	Raising elements	Automatic top cover: 600 mm width	800 mm width	Control unit for top covers	Power supply for control unit	Connection/ extension cable Length 1 m	Connection/ extension cable Length 2 m	Connection/ extension cable Length 5 m
					01017053		01017002	01617001	01017056		
					Frame St, 2 mm, RAL 7021; 7 mm laminated safety glass, length 1200 mm, electromagnet with 1200 mm connection cable, T-shaped connecting plug and fixing materials kit		Control unit for up to 12 automatic top covers, inputs: - 24 V_{DC} and 2 floating contacts; output: 24 V_{DC}	For power distribution of up to 12 automatic top covers, input 100 to 240 V_{AC}, output: 24 V_{DC}, 40 W	Cable with plug, 1 m	Cable with plug, 2 m	Cable with plug, 5 m
					1 piece	1 piece	1 piece	1 piece	1 piece	1 piece	1 piece
1	42	2000	2018	Adjustable feet	21130-592	21130-593	23130-205	23130-227	23130-206	23130-207	23130-226
2			2102	Adjustable feet + raised top cover							
3			2108	Base/plinth							
4			2192	Base/plinth + raised top cover							
5	47	2200	2218	Adjustable feet	21130-592	21130-593	23130-205	23130-227	23130-206	23130-207	23130-226
6			2302	Adjustable feet + raised top cover							
7			2308	Base/plinth							
8			2392	Base/plinth + raised top cover							

Cabinets – Varistar ServicePLUS containment

Cable panel adapter, covers beside 19" plane, solid

Order Information

01013006

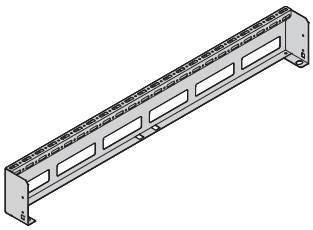

01012075

St profile, RAL 7021; fits to cabinet with a mounting bracket and has drilled holes to bolt on cable panel

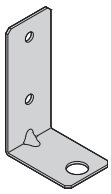

01012076

Bracket, St, 1.5 mm

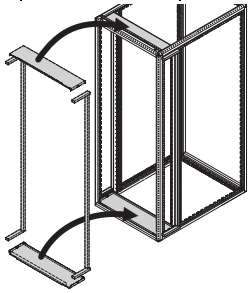

01012053

Gasketing on left and right; Cover at top and bottom

				Adaptors for cable routing			Covers beside 19" plane, solid, 600 mm cabinet width		
				for 1000 mm cabinet depth	for 1200 mm cabinet depth	Mounting bracket for cable route adaptor	for 70 mm recessed 19" plane	for 145 mm recessed 19" plane	for 220 mm recessed 19" plane
No.	For cabinet height H U	mm	Aisle height (lower edge) mm	Raising elements	PU 2 pieces	PU 2 pieces	PU 2 pieces	PU 1 kit	PU 1 kit	PU 1 kit
1	42	2000	2018	Adjustable feet	**21130-596**	21130-597	21130-598	**21130-624**	21130-618	21130-622
2			2102	Adjustable feet + raised top cover						
3			2108	Base/plinth						
4			2192	Base/plinth + raised top cover						
5	47	2200	2218	Adjustable feet	**21130-596**	21130-597	21130-598	**21130-625**	21130-619	21130-626
6			2302	Adjustable feet + raised top cover						
7			2308	Base/plinth						
8			2392	Base/plinth + raised top cover						

Cabinets – Varistar ServicePLUS containment

Covers beside 19" plane, 800 mm, with adapter bracket for reduced width

Order Information

01013006

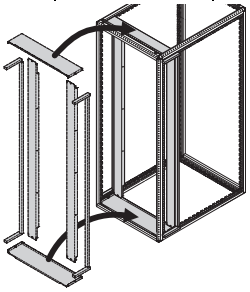

01012055

Cover left, right, at top and bottom

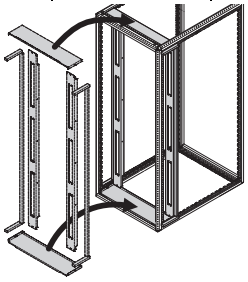

01012054

Cover with cable routes left and right; cover closed top and bottom

No.	For cabinet height H U	mm	Aisle height (lower edge) mm	Raising elements	Cover, beside 19" plane, 800 mm cabinet width: for 70 mm recessed 19" plane PU 1 kit	Cover, beside 19" plane, 800 mm cabinet width: for 145 mm recessed 19" plane PU 1 kit	Cover, beside 19" plane, 800 mm cabinet width: for 220 mm recessed 19" plane PU 1 kit	Cover with lateral cut-outs: for 70 mm recessed 19" plane PU 1 kit	Cover with lateral cut-outs: for 145 mm recessed 19" plane PU 1 kit	Cover with lateral cut-outs: for 220 mm recessed 19" plane PU 1 kit
1	42	2000	2018	Adjustable feet	21130-627	21130-631	21130-633	21130-629	21130-620	21130-623
2			2102	Adjustable feet + raised top cover						
3			2108	Base/plinth						
4			2192	Base/plinth + raised top cover						
5	47	2200	2218	Adjustable feet	21130-628	21130-632	21130-634	21130-630	21130-621	21130-635
6			2302	Adjustable feet + raised top cover						
7			2308	Base/plinth						
8			2392	Base/plinth + raised top cover						

Cabinets – Varistar ServicePLUS containment

Covers with cable ducting, cable finger, cable channel

Order Information

01013006

No.	For cabinet height H U	mm	Aisle height (lower edge) mm	Raising elements	Covers beside 19" plane, 800 mm cabinet width, with cross member: Cover, solid	Covers beside 19" plane, 800 mm cabinet width, with cross member: Cover with cable ducting openings	Cover with cable fingers for 220 mm recessed 19" plane	Cover with cable channels	Cable panel Lateral cable ducting
					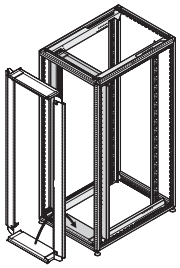 01015054	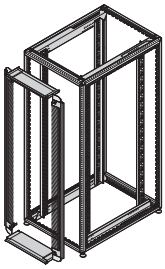 01015055	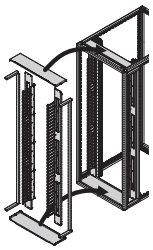 01012056	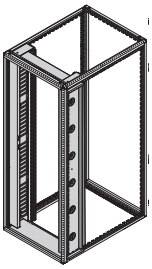 01012077	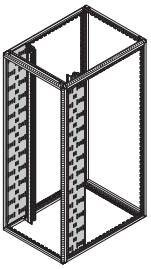 01012078
					Cover with cable ducting left and right; cover at top, bottom solid, for 19" planes recessed to different depths (25 mm increments)		Support with cable fingers and front covers	St, with cable channel and hinged front cover	St, 1 mm, width 150 mm; with perforations for cable ties or Velcro-type tape
					PU 1 kit	PU 1 kit	PU 1 kit	PU 1 kit	PU 2 pieces
1	42	2000	2018	Adjustable feet	23130-550	23130-558	21130-636	21130-638	**23130-421**
2			2102	Adjustable feet + raised top cover					
3			2108	Base/plinth					
4			2192	Base/plinth + raised top cover					
5	47	2200	2218	Adjustable feet	23130-551	23130-559	21130-637	21130-639	**23130-422**
6			2302	Adjustable feet + raised top cover					
7			2308	Base/plinth					
8			2392	Base/plinth + raised top cover					

19" plastic front panels, lateral panels

Order Information

					Closure for cut-outs in covers		Lateral panel	
					19" plastic panels	19" brush strip	Depth offset 70 mm	Depth offset 145 mm
	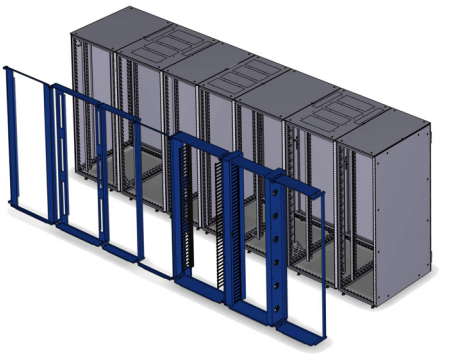 01013006				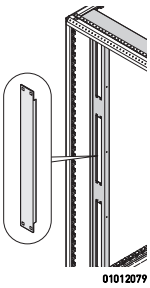 01012079	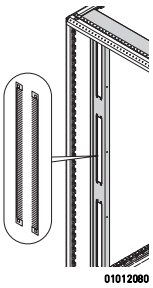 01012080	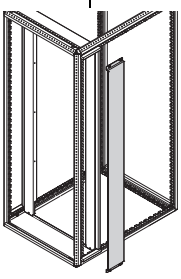 01012057	
					ABS, UL 94 V-0, clips in	Plastic	Al, 2 mm	
					To close the open cable routes in lateral panels	for sealing the open cable ducting openings of the lateral trim; 6 brushes, sufficient for 3 cutouts	Lateral panel for unequal 19" mounting depths	
No.	For cabinet height H U	mm	Aisle height (lower edge) mm	Raising elements	PU 10 pieces	PU 6 pieces	1 piece	1 piece
1	42	2000	2018	Adjustable feet	D19BPT1RU	23130-153	21130-640	21130-642
2			2102	Adjustable feet + raised top cover				
3			2108	Base/plinth				
4			2192	Base/plinth + raised top cover				
5	47	2200	2218	Adjustable feet	D19BPT1RU	23130-153	21130-641	21130-643
6			2302	Adjustable feet + raised top cover				
7			2308	Base/plinth				
8			2392	Base/plinth + raised top cover				

Cabinets – Varistar ServicePLUS containment

Airflow for side-to-side-cooled switches

Order Information

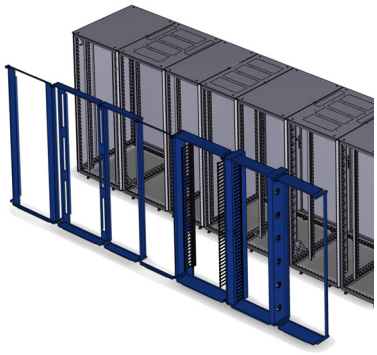

01013006

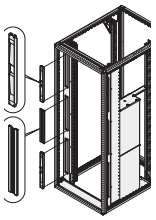

01013060

Bezels, top cover and base plate for Cisco side trims

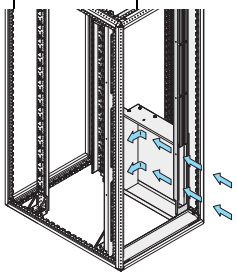

01012051

AlZn, 1 mm; multiple side plates can be fitted one above another; in all cases only one basic kit is required

No.	For cabinet height H U	mm	Aisle height (lower edge) mm	Raising elements	Basic kit for Cisco switches Air circulation from right to left	Side trims for Cisco switches Switch 4503	Switch 4506	Switch 4507	Switch 4510	Switch 6506	Switch 6509	Switch 6513
					PU 1 kit	1 piece	1 piece	1 piece	1 piece	1 piece	1 piece	1 piece
1	42	2000	2018	Adjustable feet	21130-646	23130-490	23130-491	23130-492	23130-493	23130-494	23130-495	23130-496
2			2102	Adjustable feet + raised top cover								
3			2108	Base/plinth								
4			2192	Base/plinth + raised top cover								
5	47	2200	2218	Adjustable feet	21130-647	23130-490	23130-491	23130-492	23130-493	23130-494	23130-495	23130-496
6			2302	Adjustable feet + raised top cover								
7			2308	Base/plinth								
8			2392	Base/plinth + raised top cover								

Cabinets – Varistar ServicePLUS containment

Separating walls, gasketing kits

Order Information

01013006

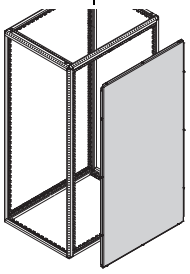

01012058

St, 1 mm;
lateral cabinet mounting,
prevents unauthorised access

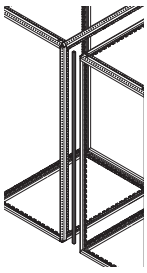

01012081

PUR flexible foam,
colour similar to RAL 7021,
UL 94-HF1;
for vertical sealing between
10 cabinets,
also suitable for base/plinth and
to raise top cover

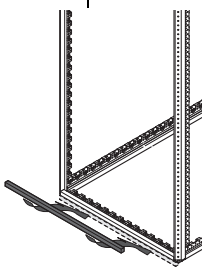

01012082

2 x bracket, St, RAL 7021;
PUR flexible foam seal,
colour similar to RAL 7021,
UL 94-HF1;
suitable for horizontal sealing
of 2 cabinets to bottom,
when adjustable feet are used

No.	For cabinet height H U	mm	Aisle height (lower edge) mm	Raising elements	Separating wall Cabinet depth 1000 mm 1 piece	Separating wall Cabinet depth 1200 mm 1 piece	Vertical gasket PU 1 kit	Horizontal gasket For 600 mm wide cabinets PU 1 kit	Horizontal gasket For 800 mm wide cabinets PU 1 kit
1	42	2000	2018	Adjustable feet	23130-480	23130-481	23130-475	23130-477	23130-478
2			2102	Adjustable feet + raised top cover					
3			2108	Base/plinth					
4			2192	Base/plinth + raised top cover					
5	47	2200	2218	Adjustable feet	23130-484	23130-485	23130-475	23130-477	23130-478
6			2302	Adjustable feet + raised top cover					
7			2308	Base/plinth					
8			2392	Base/plinth + raised top cover					

Cabinets – Varistar ServicePLUS containment

Configuration of SHX 30 air/water heat exchanger

Order Information

01013005

No.	For cabinet height H U	mm	Aisle height (lower edge) mm	Raising elements	Frame 1000 mm deep	Frame 1200 mm deep	SHX 30 air/water heat exchanger, 30 kW: Water connection at bottom	Water connection at bottom	Water connection at top and bottom (with condensate pump)	Water connection at top and bottom (with condensate pump)
					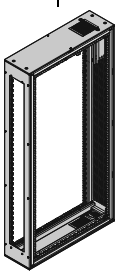 01013068		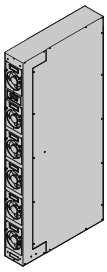 01013076		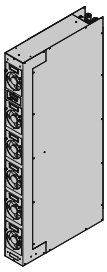 01013077	
					Rack (VARISTAR Slim-Line), St, RAL 7021; top cover and base plate, front and rear panel; prepared to accommodate SHX 30 air/water heat exchanger			2 PSUs, redundant power supply	1 PSU	2 PSUs, redundant power supply
					1 piece	1 piece	1 piece	1 piece	1 piece	1 piece
1	42	2000	2018	Adjustable feet	10130-226	10130-227	60714-067	60714-068	60714-077	60714-078
2			2102	Adjustable feet + raised top cover						
3			2108	Base/plinth						
4			2192	Base/plinth + raised top cover						
5	47	2200	2218	Adjustable feet	10130-228	10130-229	60714-067	60714-068	60714-077	60714-078
6			2302	Adjustable feet + raised top cover						
7			2308	Base/plinth						
8			2392	Base/plinth + raised top cover						

Configuration of SHX 30 air/water heat exchanger

Order Information

01013005

No.	For cabinet height H U	mm	Aisle height (lower edge) mm	Raising elements	Adjustable feet	Gasketing for adjustable feet	Base/plinth	Side trim for base/plinth Depth 1000 mm	Side trim for base/plinth Depth 1200 mm
					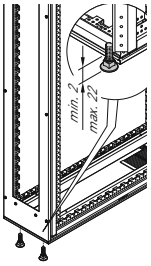 01013069	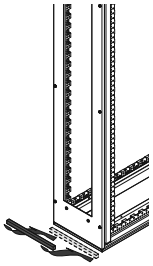 01013070	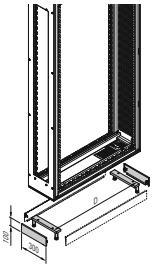 01013071	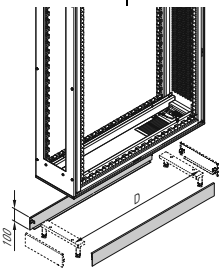 01013072	
					St, black, for the rack, static load-carrying capacity 1000 kg. Please order gasketing separately	Polyurethane gasketing, suitable for front and rear, RAL 7021; for closing the air gap at the front	Base plinth, St, cover, St, 1.5 mm, height 100 mm, width 300 mm, RAL 7021; please order cover separately	St, 1.5 mm, height 100 mm, RAL 7021	
					PU 4 pieces	PU 2 pieces	PU 1 kit	PU 2 pieces	PU 2 pieces
1	42	2000	2018	Adjustable feet	23130-511	23130-538	23130-507	**23130-172**	23130-363
2			2102	Adjustable feet + raised top cover					
3			2108	Base/plinth					
4			2192	Base/plinth + raised top cover					
5	47	2200	2218	Adjustable feet	23130-511	23130-538	23130-507	**23130-172**	23130-363
6			2302	Adjustable feet + raised top cover					
7			2308	Base/plinth					
8			2392	Base/plinth + raised top cover					

Cabinets – Varistar ServicePLUS containment

Configuration of SHX 30 air/water heat exchanger

Order Information

01013005

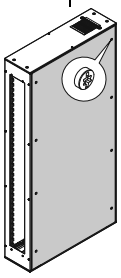
01013073

St, 1 mm, incl. GND/earthing

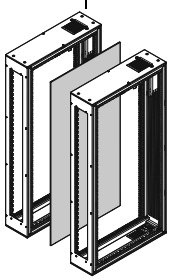
01013074

St, 1 mm, AlZn; lateral cabinet mounting prevents unauthorized access

No.	For cabinet height H U	mm	Aisle height (lower edge) mm	Raising elements	Screw-fixed side panel Depth 1000 mm PU 2 pieces	Screw-fixed side panel Depth 1200 mm PU 2 pieces	Separating wall Cabinet depth 1000 mm 1 piece	Separating wall Cabinet depth 1200 mm 1 piece
1	42	2000	2018	Adjustable feet	21130-013	21130-535	23130-480	23130-481
2			2102	Adjustable feet + raised top cover				
3			2108	Base/plinth				
4			2192	Base/plinth + raised top cover				
5	47	2200	2218	Adjustable feet	21130-018	21130-537	23130-484	23130-485
6			2302	Adjustable feet + raised top cover				
7			2308	Base/plinth				
8			2392	Base/plinth + raised top cover				

Cabinets – Varistar ServicePLUS containment

Configuration of SHX 30 air/water heat exchanger

Order Information

01013005

No.	For cabinet height H U	mm	Aisle height (lower edge) mm	Raising elements	Top cover 300 mm width 1 piece	Raised top cover PU 2 pieces	Assembly kit PU 6 pieces
					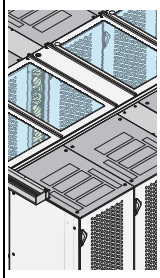 01013079 St, 2 mm, RAL 7021, aisle width 1200 mm	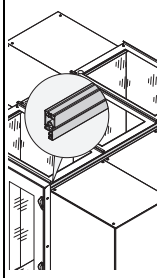 01012051 Al extrusion, RAL 7021, length 2400 mm, height 84 mm	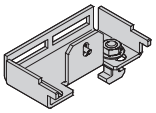 01012052 Mounting of top cover raising profile
1	42	2000	2018	Adjustable feet	21130-648	–	–
2			2102	Adjustable feet + raised top cover		21130-594	23130-433
3			2108	Base/plinth		–	–
4			2192	Base/plinth + raised top cover		21130-594	23130-433
5	47	2200	2218	Adjustable feet	21130-648	–	–
6			2302	Adjustable feet + raised top cover		21130-594	23130-433
7			2308	Base/plinth		–	–
8			2392	Base/plinth + raised top cover		21130-594	23130-433

Cabinets – Varistar ServicePLUS containment

Cabinets – Varistar cabinet-based and row-based cooling

Content

Cabinets 1

Wall mounted cases 2

Accessories for cabinets and wall mounted cases . 3

Climate control . 4

Electronics cases 5

Subracks/ 19" chassis 6

Front panels, plug-in units . . . 7

Systems 8

Power supply units 9

Backplanes . . . 10

Connectors, front panel component system 11

Appendix 12

01017025

01013005

Electronic monitoring unit with display and interfaces

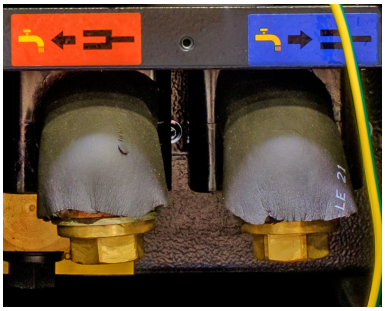

01017015

Front bottom or bottom/top water connection, easy access and greatest possible safety

01013005

Six powerful, temperature-controlled fans. Easy access for maintenance purposes during operation

Applications

The SHX 30 heat exchanger is especially suitable for use in the following areas:

- Data centers
- 19" and blade-server applications
- Systems with extremely high heat dissipation

The future for data centers

VARISTAR LHX+, the space-independent complete cabinet system for dissipating up to 34 kW of heat.
The air/water heat exchanger is installed in the cabinet as complete unit on the left or right side. The horizontal air flow provides for uniform air dissipation over the entire cabinet height.

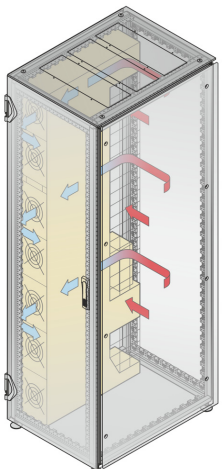

01017060

VARISTAR LHX+ with air/water heat exchanger for data centers

- Cooling capacity up to 34 kW
- Complete cabinet solution, static load capacity up to 1600 kg
- Space-independent cooling, high energy efficiency
- Water and air circuits are temperature controlled
- Low noise level
- Fans may be changed individually while the unit is operating

VARISTAR
Platform 1.4
Dimensions 1.8

With single door

01017003

- Cooling capacity up to 34 kW (heat exchanger on left or right)

With double door

01017007

- Cooling capacity up to 34 kW (heat exchanger on left or right)

VARISTAR SHX+, single door 1.230
VARISTAR SHX+, double door 1.231

00711020

Accessories

- Management system for monitoring LHX+ and other cabinet parameters

Accessories
Heat exchangers . 1.232
Rack for heat exchanger 1.234
Adjustable feet ... 1.235
Base/plinth 1.236

3040704

ServicePLUS

e.g. other cabinet dimensions
e.g. side-by-side mounting solutions
e.g. containment (cold aisle)
e.g. custom solutions (special sizes)

www.schroff.biz/ServicePLUS

VARISTAR
Electronics 1.10
VARISTAR
EMC 1.54
VARISTAR
Seismic 1.84
VARISTAR
Datacom and Networking Technology 1.124

Cabinets – Varistar cabinet-based and row-based cooling

Optimum temperature for air/water heat exchanger

Since the thermal load continues to increase, conventional cooling methods eventually reach their physical limits. It can happen that thermal load limits within a cabinet are such that some height units must go unused.

The solution:
Air/water heat exchangers installed close to the heat source not only increase the cooling capacity per cabinet, but also improve the redundancy of the data center. With intelligent control systems, air conditioners can quickly respond to the working load of the equipment, thereby enabling additional savings.

Air/water heat exchangers installed close to the heat source not only increase the cooling capacity per cabinet, but also improve the redundancy of the data center. With intelligent control systems, air conditioners can quickly respond to the working load of the equipment, thereby enabling additional savings.

Thanks to the Ethernet and Modbus connection, Schroff air/water heat exchangers can be monitored and configured. Operating parameters are easy to specify, and temperature, fan speed and error protocols can be managed remotely.

ADVANTAGES

- Integrated solutions with space-independent thermal transfer
- Highest cooling capacity in the smallest of spaces
- A wide variety of dimensions are supported, short implementation time and low planning effort

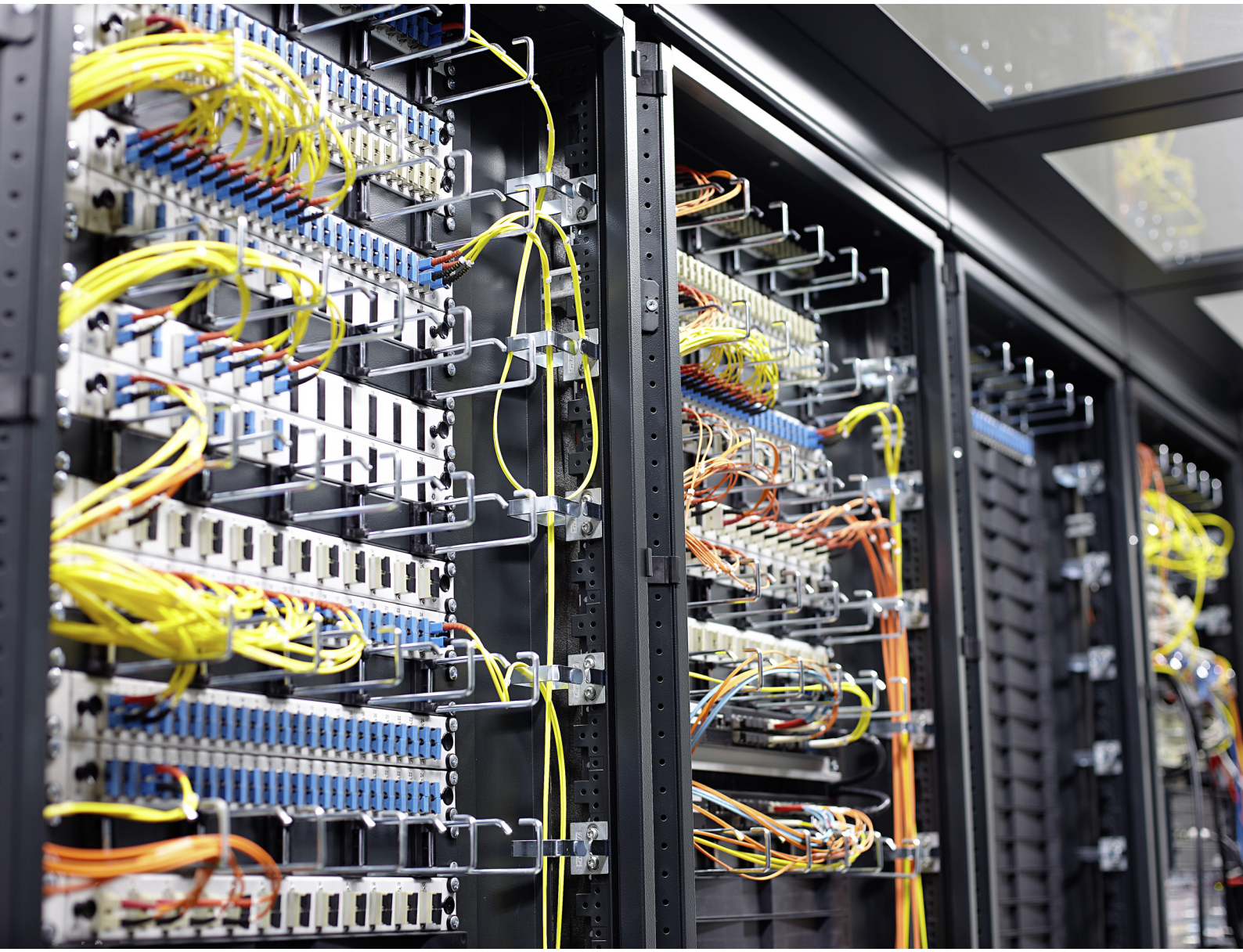

01015011

Cabinets – Varistar cabinet-based and row-based cooling

Integrated heat exchanger

In this combination, an active heat exchanger integrated into an 800 mm wide cabinet has the lowest space requirement on the market. The closed system reduces the noise level and controls itself by means of the thermal load. With a cooling capacity of up to 34 kW[1)], the heat exchanger is suitable for HPC applications. Multiple cabinets can be mounted side-by-side to create a closed system. Thanks to the low space requirement, reduced noise level and ease of creating redundancy, this heat exchanger is well suited also for medium-sized data centers.

01017009

LHX+ cabinets mounted side-by-side with integrated heat exchangers

Heat exchanger mounted side-by-side

Active heat exchanger for containment systems with a cooling capacity of up to 34 kW[1)]. This in-row heat exchanger is mounted side-by-side to cabinets within the aisle containment. This enables optimal scalability with regard to planning for the cooling capacity and the redundancy of the system.

01013005

SHX 30 in-row heat exchanger

Integrated heat exchanger:

Cooling capacity	Up to 34 kW[1)]
Dimensions	Width 800 mm Height 2100 mm Depth 1000 to 1200 mm
Functions	IP 55 protection on request EMC design on request 1600 kg static load capacity Bottom/top water connections Control system options with an external temperature sensor (Display in four languages)

In-row heat exchanger:

Cooling capacity	Up to 34 kW
Dimensions	Width 300 mm Height 2000 to 2200 mm Depth 1000 to 1200 mm
Functions	Water connections from bottom/top Control system options with an external temperature sensor Display in four languages

1) Cooling capacity 34 kW at +12 °C water flow temperature, +24 °C cold air temperature, 4.5 m³/h water flow rate; for other conditions refer to the diagram for the cooling capacity

Cabinets – Varistar cabinet-based and row-based cooling

Space-saving, low-noise and energy-efficient

Highly efficient and noise-optimized

The Varistar heat exchanger range impresses customers with its high energy efficiency and cooling capacity. Failure safety and ease of servicing play a special role. The unit itself is designed for long life. Sensitive components with a low MTBF have been consistently dispensed with and necessary wear parts are treated carefully during operation. Fans are positioned in the cold area to significantly increase the service life of the bearings compared to operation in a warm-air area. Additionally, the heat exchanger is equipped as standard with a droplet separator and a condensate management system to prevent the formation of water droplets in the air entry area to the server.

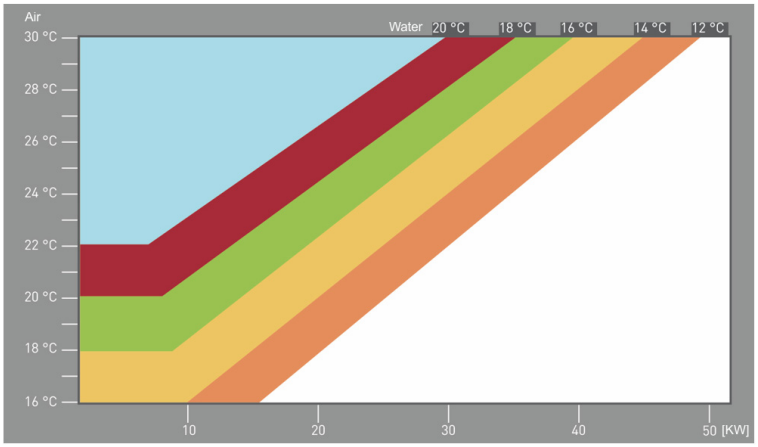

01017061

Compelling use of space

Since the heat exchanger is inserted on one side as a complete module, in a cabinet only 800 mm wide, the 19" plane can be used over its full height, with 42 U (max. 52 U). This saves valuable space in the data center!

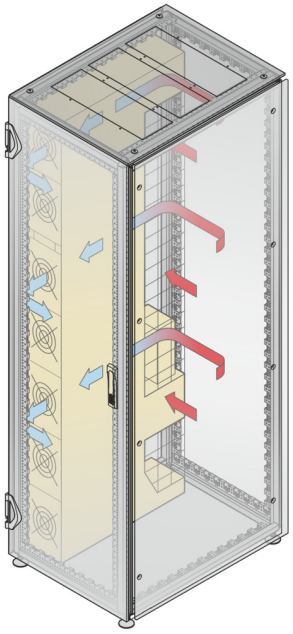

01017060

IN-ROW heat exchanger to cool your indoor aisle containment

This in-row heat exchanger is specially designed to cool cabinets with high thermal loads within an aisle containment structure and is included in the row as a modular unit. Depending on the packaging density, you can scale the units optimally and implement redundancy.

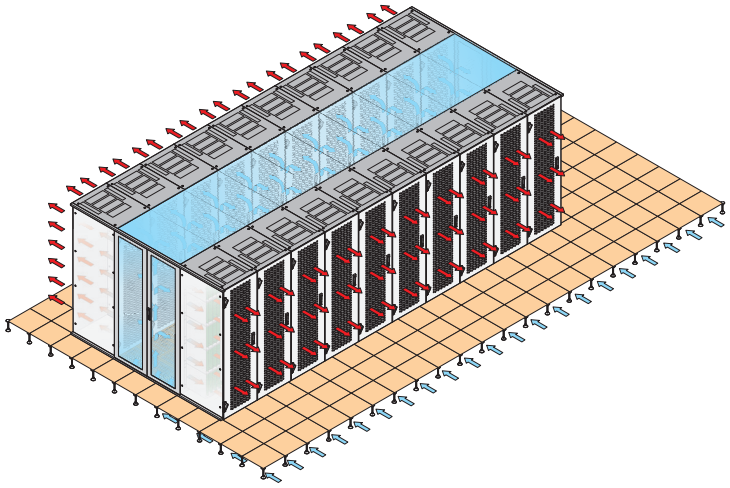

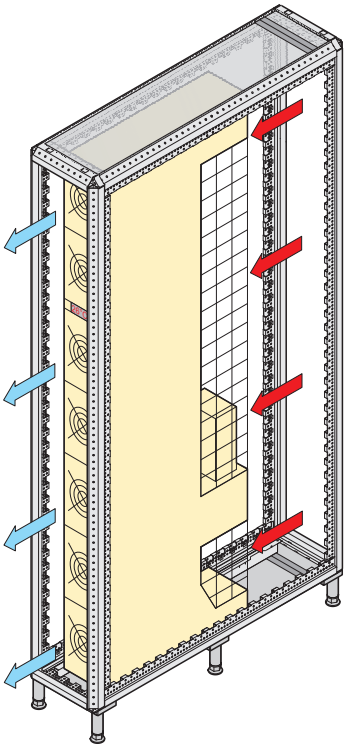

01012083

Cabinets – Varistar cabinet-based and row-based cooling

One heat exchanger for multiple cabinets

The option of mounting the cooling unit to the left or right of the 19" plane means it is easy to build very variable cooling systems from multiple cabinets. If the full cooling capacity is not needed initially, one unit can supply cold air to multiple cabinets mounted side-by-side. In cabinets mounted side-by-side, the space for the cooling unit is closed with an air baffle. If the necessary cooling capacity increases, the air baffle is removed and an additional cooling unit is inserted.

Redundancy from side-by-side mounting

Redundant systems are also very easy to implement. If two cabinets are mounted side-by-side with one heat exchanger each, one unit can take over the cooling of both cabinets up to half of the max. cooling capacity per cabinet.

01017015

01017015

One heat exchanger for multiple cabinets

For installation and maintenance, the air conditioners of the Varistar series have a very service-friendly design. The water connections are easy to access. Fans can be changed individually and very quickly while the unit is operating. However, if a defined threshold value does arise, either in the cabinet or in the unit itself, each heat exchanger will provide valuable information for maintenance and service work. Fan speeds and temperatures at various positions in the cooling circuit are measured via integrated communication interfaces and can be shown on a display. However, all information (measured values, threshold values, etc) can also be transferred directly into the network management system.

01017015

- Bottom or top and bottom water connections
- Power supplies
- Communication interface
- External temperature sensor
- Interlog interface

01013005

- Display
- Hot-swap-capable fans

VARISTAR LHX+, cabinet with single door, integrated air conditioner

01017003

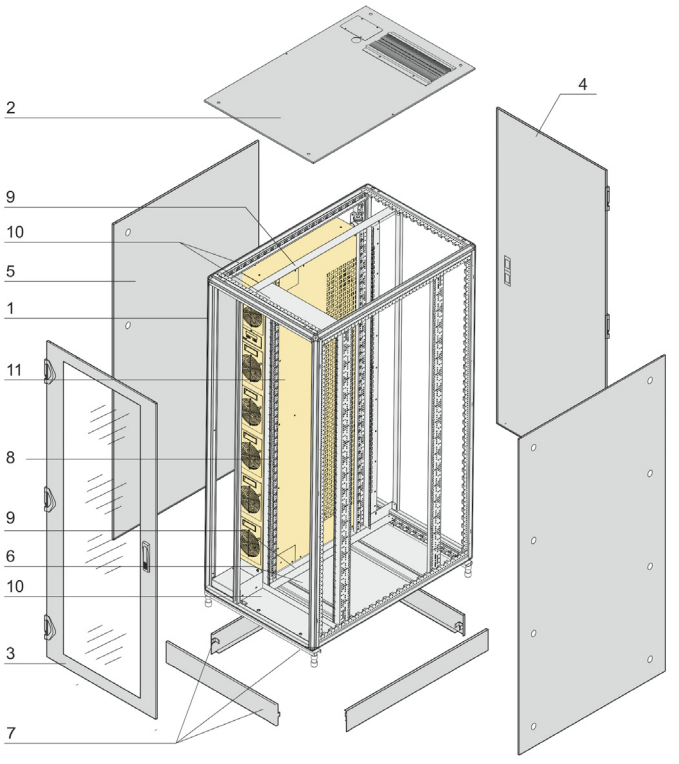

01017059

- Cabinet with air/water heat exchanger with cooling capacity of 34 kW
- Max. static load capacity 1600 kg
- Gasket all around reduces noise and suction of room air

Delivery includes (Fully assembled and grounded)

Item	Qty.	Description
1	1	Welded basic frame, Slim-Line, St profile, zinc-plated, RAL 7021, with gasket all around
2	1	Flat roof, St, RAL 7021 with cable entry point in rear with brush, entry point for water connection in rear, entry points can be sealed with a gasket/cover plate
3	1	Front door glazed, St frame, RAL 7021, single-pane safety glass 6 mm, 3 x 180° hinge, three-point closure, pivoting lever handle for optional DIN profile half cylinder
4	1	Rear door, St, RAL 7021, 3 x 180° hinge, three-point closure, pivoting lever handle for optional DIN profile half cylinder
5	2	Side panel, screwed, St, RAL 7021
6	1	Baseplate, St, RAL 7021 with cable entry point in rear with brush, entry point for water connection in rear, entry points can be sealed with a gasket/cover plate
7	1	Base/plinth 100 mm, with additional center crossmember, St, RAL 7021, removable covers, integrated adjustable feet
8	4	19" panel/slide mount with EIA cut-outs, St, RAL 7021, 225 mm recessed in front, c dimension 740 mm distance between front and rear 19" plane
9	2	Support rail for connecting the air/water heat exchanger and 19" panel/slide mounts, St, RAL 7021
10	4	Air baffle, St, RAL 7021
11	1	SHX 30 air/water heat exchanger, RAL 7021, 100 to 240 V_{AC}, may be mounted on the left or right, see Order Information
12	1	Power cable, length 1.5 m
13	1	Connecting cable for management unit
14	1	User manual (for online download)

Order Information

Height U	Height mm	Width mm	Depth mm	Heat exchanger	Water connection	Power supply	Part no.
42	2100	800	1200	Left	Top	1	10130-300
42	2100	800	1200	Right	Top	1	10130-301
42	2100	800	1200	Left	Top and bottom	2 redundant	10130-302
42	2100	800	1200	Right	Top and bottom	2 redundant	10130-303

Accessories	
Lifting eye for top cover PU 4 pieces	**23130-072**
Electronic closing (MLR3000), 13.56 MHz-MIFARE With reader, 1 set	23130-513
Electronic locking (MRL3000), Mifare With reader, 1 set	23130-565

Note

- 34 kW cooling capacity at +12 °C water flow temperature, +24 °C cold air temperature
- Other dimensions on request

Cabinets – Varistar cabinet-based and row-based cooling

VARISTAR LHX+, cabinet with double door, integrated air conditioner

01017007

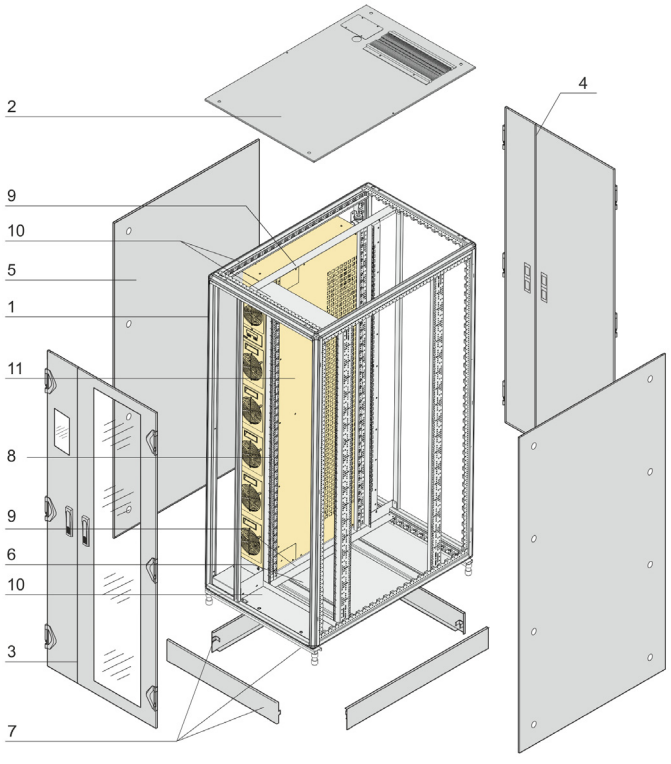

01017058

- Cabinet with air/water heat exchanger with cooling capacity of 34 kW
- Max. static load capacity 1600 kg
- Separate front and rear access doors for air/water heat exchanger
- Gasket all around reduces noise and suction of room air

Delivery includes (Fully assembled and grounded)

Item	Qty.	Description
1	1	Welded basic frame, Slim-Line, St profile, zinc-plated, RAL 7021, with gasket all around
2	1	Flat roof, St, RAL 7021 with cable entry point in rear with brush, entry point for water connection in rear, entry points can be sealed with a gasket/cover plate
3	1	Front door, divided asymmetrically, RAL 7021, 3 x 180° hinges, three-point closure, pivoting lever for optional DIN profile half cylinder; in front of the 19" plane, 600 mm, St frame, glazed, single-pane safety glass 6 mm, in front of the heat exchanger, 200 mm, St, with viewing window, single-pane safety glass 6 mm
4	1	Back door, divided asymmetrically, St, RAL7021, 3 x 180° hinges, three-point closure, pivoting lever for optional DIN-profile half cylinder; in front of the 19" plane, 600 mm, in front of the heat exchanger, 200 mm
5	2	Side panel, screwed, St, RAL 7021
6	1	Baseplate, St, RAL 7021, cable entry point in rear, entry point for water connection, entry points can be sealed with gasket/cover plate
7	1	Base/plinth 100 mm, with additional center crossmember, St, RAL 7021, removable covers, integrated adjustable feet
8	4	19" panel/slide mount with EIA cut-outs, St, RAL 7021, 225 mm recessed in front, c dimension 740 mm distance between front and rear 19" plane
9	2	Support rail for connecting the air/water heat exchanger and 19" panel/slide mounts, St, RAL 7021
10	4	Air baffle, St, RAL 7021
11	1	SHX 30 air/water heat exchanger, RAL 7021, 100 to 240 V_{AC}, may be mounted on the left or right, see Order Information
12	1	Power cable, length 1.5 m
13	1	Connecting cable for management unit
14	1	User manual (for online download)

Order Information

Height U	Height mm	Width mm	Depth mm	Heat exchanger	Water connection	Power supply	Part no.
42	2100	800	1200	Left	Top	1	10130-304
42	2100	800	1200	Right	Top	1	10130-305
42	2100	800	1200	Left	Top and bottom	2 redundant	10130-306
42	2100	800	1200	Right	Top and bottom	2 redundant	10130-307

Accessories	
Lifting eye for top cover PU 4 pieces	**23130-072**
Electronic closing (MLR3000), 13.56 MHz-MIFARE With reader, 1 set	23130-513
Electronic locking (MRL3000), Mifare With reader, 1 set	23130-565

Note

- 34 kW cooling capacity at +12 °C water flow temperature, +24 °C cold air temperature
- Other dimensions on request

SHX 30 air/water heat exchanger

01017026

- Air/water heat exchanger with cooling capacity of 34 kW[1)]
- Water connection at bottom or bottom/top (with condensate pump)
- 1 PSU or 2 PSUs (redundant)
- Fans may be changed individually while the unit is operating
- Drop collector and condensate management

Delivery includes

Item	Qty	Description
1	1	SHX 30 air/water heat exchanger, RAL 7021, 100 ... 240 V_{AC}
2	1	Mains cable, 1.5 m
3	1	Connecting cable for management unit
4		User manual (for online download)

Order Information

SHX 30 air/water heat exchanger, 34 kW[1)]		Part No.
Water connection at bottom	1 PSU	60714-067
	2 PSUs, redundant power supply	60714-068
Water connection at top and bottom (with condensate pump)	1 PSU	60714-077
	2 PSUs, redundant power supply	60714-078
Accessories		
Cabinet management basic units Height 44 mm, width 251 mm, depth 53 mm, for monitoring one air/water heat exchanger, max. 16 sensor values, 1 piece		EMX111
Cabinet management basic units Height 44 mm, width 440 mm, depth 134 mm, for monitoring up to max. 8 air/water heat exchangers, max 128 sensor values, 1 piece		EMX888
Capteur de température à raccorder directement au SHX 30, longueur du câble 2 m, 1 pièce		60130-724

01013020

Rear connections at bottom

01013021

Rear connections at top

Note

Please order optional management unit separately

- Cabinet management base unit connects via RJ 45 interface
- Web interface
  - Automatic detection of connected Varistar SHX 30 air/water heat exchanger
  - Inlet temperature of servers (parameter can be set via web interface)
  - Switch on/off of cooler
  - Adjustment of set temperature and fan speed
  - Air temperature monitoring at front/rear, fan speed and water inlet temperature
  - Temperature monitoring/control using an external temperature sensor (please order separately)

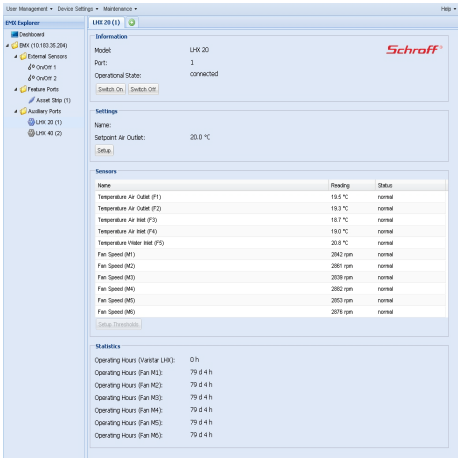

00711017

Management browser representation

- 1) Cooling capacity 34 kW at +12 °C water flow temperature, +24 °C cold air temperature, 4.5 m³/h water flow rate; for other conditions refer to the diagram for the cooling capacity

Cabinets – Varistar cabinet-based and row-based cooling

SHX 30 air/water heat exchanger

Graph: cold air temperature against cooling capacity

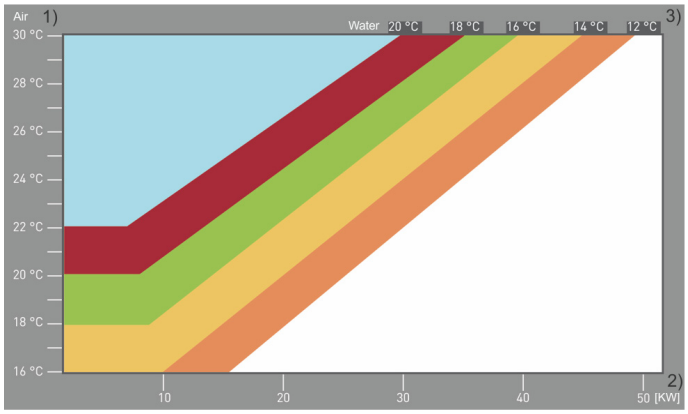

1) Cold air temperature
2) Cooling capacity at different cold water temperatures
Fan speed 100%
Maximum water flow rate 4.5 m^3/h
3) Water inlet temperature

Technical data

Cooling capacity	
Useful cooling capacity	34 kW[1)]
Normal temperature	18 to 50 °C (adjustable in 0.1 °C increments)
Max. control deviation of emergency cooling can be set to 0–8 K relative to the set value	4 (factory-preset)
Water circuit	
Cooling medium [2)]	Water, water-glycol mix (max. 33%)
Water inlet temperature [3)]	6 to 18 °C
Water flow volume	up to 4.5 m^3/h
Pressure loss in device at	3.0 m^3/h, max. 1.3 bar; 4.5 m^3/h, max. 3.1 bar
Water conduit	Copper
Water connection inlet/outlet	Rp 1"
Condensate drain connection	Rp $^1/_2$"
Air circuit	
Max. airflow volume, temperature-dependent control	5000 m^3/h
Electrical data AC	
Supply voltage (single phase)	100 to 240 V_{AC} (50 / 60 Hz)
Max. current consumption	6 A / 12 A (230 V / 115 V)
Max. power consumption fan speed 100% / Normal operation (fan speed 80%)	1100 W / 750 W
Pre-fuse (on building side)	D 10 A / D 16 A (230 V / 115 V)
Interface	
RS 485 Modbus interface	Connection option for external monitoring system
RS 232 (SUB-D 9-pin)	Serial access
Input, terminal block with 10 potential-free contacts	External temperature sensor connection
General data	
Ambient temperature: Transport, storage when fully emptied / when containing 35% glycol / in operation outside of the cabinet	-25 to 70 °C / 5 to 70 °C
Relative humidity for transport and storage (non-condensing)	5 to 95%
Heat exchanger dimensions	Height 1849 mm, width 189.5 mm, depth 850 mm
Heat exchanger weight	110 kg
Weight of cabinet with cooling module approx.	370 kg

1) Cooling capacity 34 kW at +12 °C water flow temperature, +24 °C cold air temperature, 4.5 m^3/h water flow rate; for other conditions refer to the diagram for the cooling capacity

2) To ensure problem-free operation of the air/water heat exchanger the quality requirements of the water must be maintained; the appropriate anti-corrosion and frost protection agents are dependent on the environment in which the unit is used and on the external chiller (VDI 3803, see also user manual).

3) At water inlet temperatures of < 6 °C und > 15 °C, the control accuracy can no longer be guaranteed. There is also a risk of condensation if the water temperature falls short of the given limits.

Rack for SHX 30 air/water heat exchanger

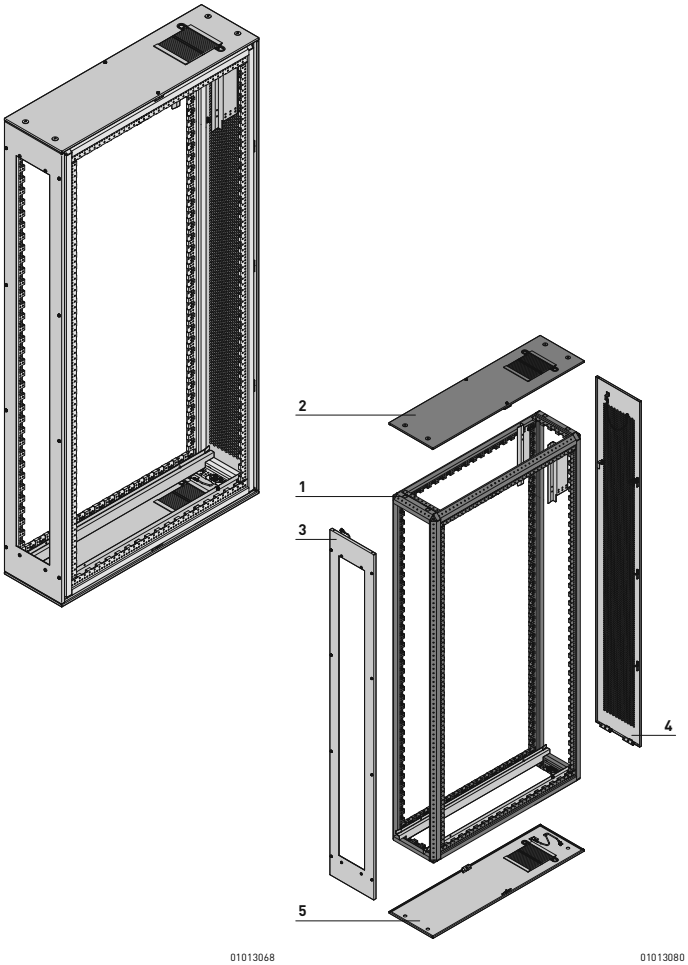

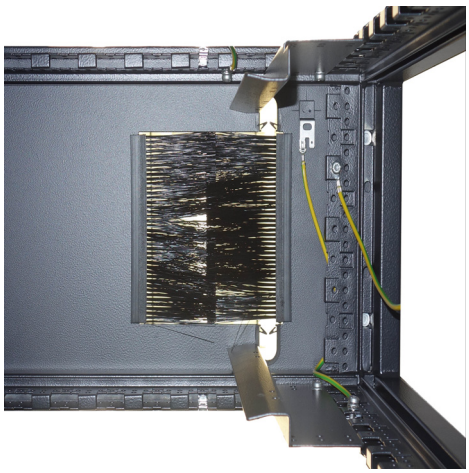

Water enters via brush strips; lateral cable ducting for power/data cables

- Rack (VARISTAR Slim-Line) to accommodate a SHX 30 air/water heat exchanger
- Height 2000 or 2200 mm
- Depth 1000 or 1200 mm
- Width 300 mm
- Covers top, bottom, front and rear

Delivery includes

Item	Qty	Description
1	1	Welded basic rack (Slim-Line) from steel profiles, RAL 7021; earthing stud
2	1	Flat top cover, St, RAL 7021; with brush strip cut-out (for water) and on the side for cable ducting
3	1	Front frame, St, RAL 7021
4	1	Rear cover, perforated, lockable
5	1	Base plate, St, RAL 7021; with brush strip cut-out (for water) and on the side for cable ducting

Order Information

Height mm	Width mm	Depth mm	Part no.
2000	300	1000	10130-226
2000	300	1200	10130-227
2200	300	1000	10130-228
2200	300	1200	10130-229
Accessories			
Adjustable feet for the frame, RAL 7021, static load-carrying capacity 1000 kg, PU 4 pieces			23130-511
Gasketing for adjustable feet Polyurethane foam gasketing, color similar to RAL 7021, length 300 mm, for sealing front and rear, PU 2 pieces			23130-538
Base/plinth Base plinth, St, width 300 mm, height 100 mm; bolts on to rack, PU 2 pieces			23130-507
Side trim St, 1.5 mm, height 100 mm, depth 1000 mm, PU 2 pieces			**23130-172**
Side trim St, 1.5 mm, height 100 mm, depth 1200 mm, PU 2 pieces			23130-363
Side panel, screw-fixed for IP 55 St, 1 mm, height 2000 mm, depth 1000 mm, 2 pieces			21130-013
Side panel, screw-fixed for IP 55 St, 1 mm, height 2000 mm, depth 1200 mm, 2 pieces			21130-535
Side panel, screw-fixed for IP 55 St, 1 mm, height 2200 mm, depth 1200 mm, 2 pieces			21130-018
Side panel, screw-fixed for IP 55 St, 1 mm, height 2200 mm, depth 1200 mm, 2 pieces			21130-537
Separating wall St, 1 mm, AlZn, height 2000 mm, for depth 1000 mm, 1 piece			23130-480
Separating wall St, 1 mm, AlZn, height 2000 mm, for depth 1200 mm, 1 piece			23130-481
Separating wall St, 1 mm, AlZn, height 2200 mm, for depth 1000 mm, 1 piece			23130-484
Separating wall St, 1 mm, AlZn, height 2200 mm, for depth 1200 mm, 1 piece			23130-485

Cabinets – Varistar cabinet-based and row-based cooling

Adjustable feet

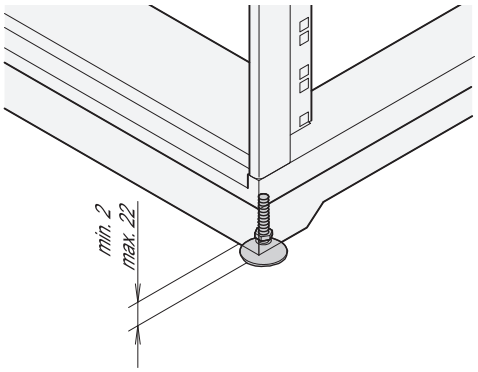

MRA44483

- Adjustable feet for direct mounting onto frame
- Static load-carrying capacity 1000 kg

Delivery includes

Item	Qty	Description
1	4	Adjustable feet, St, polyamide, black
2	1	Fixing materials kit

Order Information

Description	Part no.
Adjustable feet	23130-511
Accessories	
Gasketing for adjustable feet Polyurethane foam gasketing, color similar to RAL 7021, length 300 mm, for sealing front and rear, PU 2 pieces	23130-538

Gasketing for adjustable feet

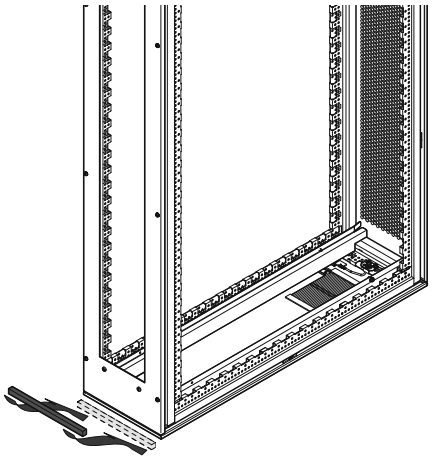

01013070

- For horizontal sealing at bottom in containments (front and rear) where adjustable feet are used

Delivery includes

Item	Qty	Description
1	2	Gasketing, flexible polyurethane, length 300 mm, color similar to RAL 7021, conforms to UL 94-HF1

Order Information

Description	Part no.
Gasketing for adjustable feet	23130-538

Cabinets – Varistar cabinet-based and row-based cooling

Base/plinth

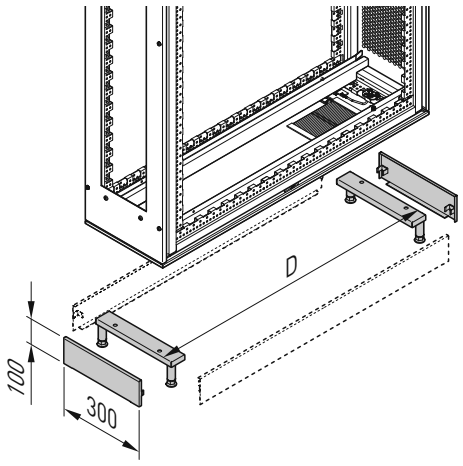

01013071

Base/plinth

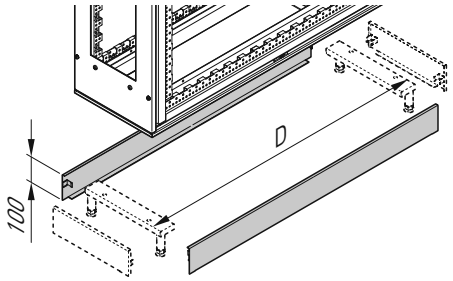

01013072

Accessories: Side covers

- Base for 300 mm wide frame (air/water heat exchanger)
- Base is bolted to the frame at front and rear; please order side trims separately

Delivery includes

Item	Qty	Description
1	2	Base, St, 1.5 mm; with built-in feet, width 300 mm, color RAL 7021
2	1	Fixing materials kit

Order Information

Height mm	Width mm	Part no.
100	300	23130-507
Accessories		
Side trim RAL 7021, St, 1.5 mm, height 100 mm, depth 1000 mm, PU 2 pieces		**23130-172**
Side trim RAL 7021, St, 1.5 mm, height 100 mm, depth 1200 mm, PU 2 pieces		23130-363

Top cover element for aisle containment (SHX 30 air/ water heat exchanger)

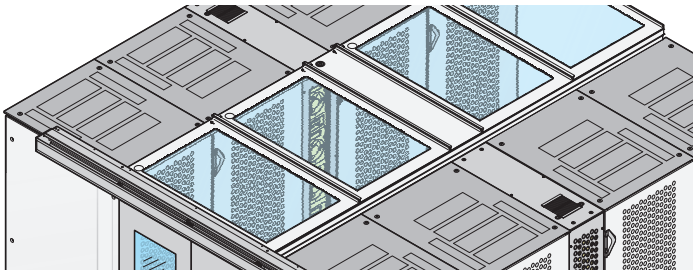

01013079

Width 300 mm

- Suitable for an aisle width of 1200 mm
- Width 300 mm (when fitting directly beside the "Sliding door, mechanical" a 200 mm width must be used)
- Top cover can be removed from inside (allows access to lighting and facilitates maintenance works)
- The universal top cover profile enables the aisle height to be raised by 84 mm and cabinets with other heights can also be integrated. Please order separately

Delivery includes

Item	Qty	Description
1	1	Top cover, St, 2 mm, RAL 7021, plate length 1200 mm
2	1	Fixing materials kit

Order Information

Width mm	Description	Part no.
300	For cabinet width 300 mm (aisle width 1200 mm)	21130-648
Accessories		
Raised top cover Al extrusion, RAL 7021, length 2400 mm, height 84 mm, PU 2 pieces; raises top cover elements by 84 mm and allows integration of cabinets with other heights		21130-594
Assembly kit Mounting of top cover raising profile, PU 6 pieces		23130-433

Cabinets – Varistar cabinet-based and row-based cooling

Management for SHX 30

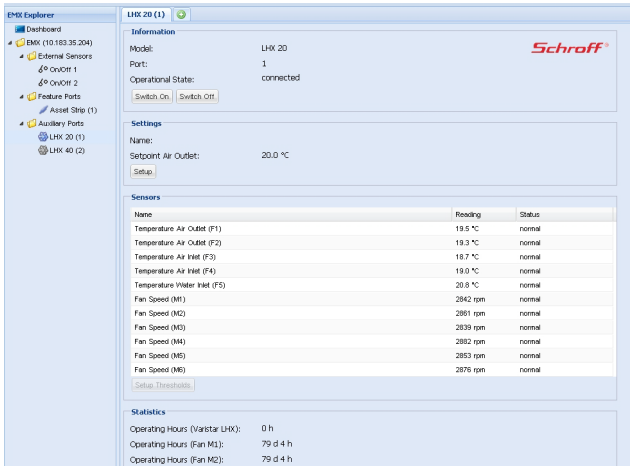

00711017

Browser display

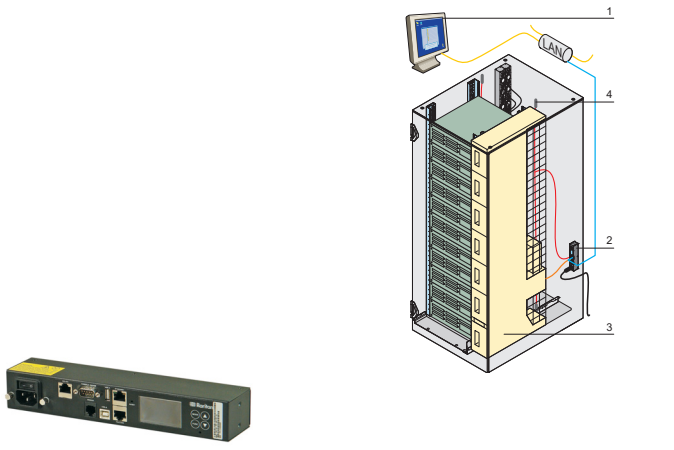

00711020 01011051

EMX -111

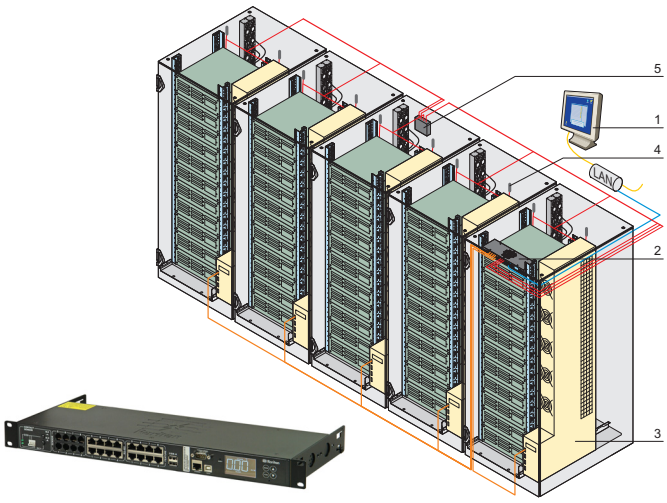

01011050 01011050

EMX -888

Item	Description
1	Real-time monitoring of web graphical user interface (GUI)
2	EMX
3	LHX 20/40
4	Telemonitored temperature and humidity sensors
5	Cabinet management base unit

- Connection of cabinet management basic unit with RJ 45 interface
- Automatic detection of the connected LHX 20/40 air/water heat exchangers
- Monitored parameters:
  - Inlet temperature of servers (parameter can be set via web interface
  - Air temperature front (2 parameters)
  - Air temperature rear (2 parameters)
  - Fan speed
    (6 parameters for LHX 20, 7 parameters for LHX 40)
  - Water inflow temperature (1 parameter)

Note

- For cabinet management base unit see page 3.46
- Sensors (temperature, humidity, differential pressure, airflow...) and hub for connecting multiple sensors see from page 3.47

Content

Cabinets 1
Wall mounted cases 2
Accessories for cabinets and wall mounted cases . 3
Climate control . 4
Electronics cases 5
Subracks/ 19" chassis 6
Front panels, plug-in units . . . 7
Systems 8
Power supply units 9
Backplanes . . . 10
Connectors, front panel component system 11
Appendix 12

Cabinets – VARISTAR LHX 3

01008029

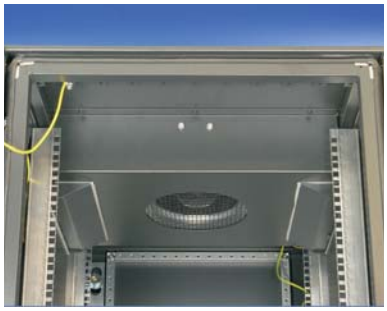

01007010

Top cover with fan
- Fan unit in top cover
- Airflow through channels in side panel
- Easy maintenance and exchange

01007014

Air/water heat exchanger in base/ plinth
- Extractable
- Water connection from rear, optionally from front
- Cable ducting to rear, can be sealed with slide covers

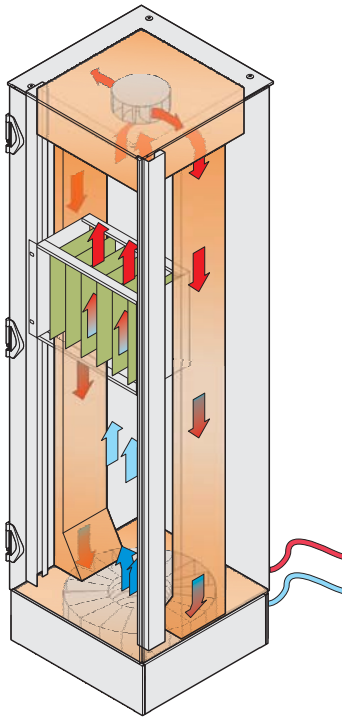

01007055

Advantages:
By separating the heat exchanger (in the base/plinth) from the fan (in the top cover), the cold air flows evenly through the cabinet. Reflowing of the warm air to the heat exchanger through channels in the side panels.

Applications:
Measuring and test devices in industrial areas, e.g.:
- Temperature sensitive precision measurements
- Engine and transmission test bench

Air/water heat exchanger for measuring and test equipment

- Complete cabinet to protection class IP 55 with heat exchanger in base/plinth and fan tray in top cover
- Even circulation of cold air within the cabinet, no air short circuits as with side-by-side mounted units
- Cooling capacity up to 3 kW
- Very low noise level of 45 dB(A)

VARISTAR
Platform 1.4
Dimensions 1.8

01007015

VARISTAR LHX 3

- Air/water heat exchanger in base/plinth
- Airflow through channels in side panel
- Leakage safety

VARISTAR LHX 3 . 1.238

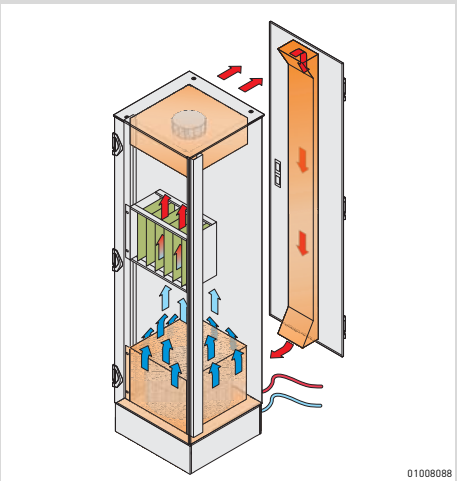

01008088

VARISTAR LHX 19" chassis, available on request

- Air/water heat exchanger as 19" chassis
- Airflow through channels in rear door (cabinets may be mounted side-by-side)
- Devices with different airflows may be used (e.g. from left to right or from front to rear)
- Variable air outlet in 19" chassis, thus selective direction of cold air

30407004

ServicePLUS

e.g. climate control, complete assembly, cabling (power supply), function test
e.g. delivery to point of use, erection service, commissioning, replacement service, maintenance, repairs, replacement parts
e.g. custom solutions (special sizes)

www.schroff.biz/ServicePLUS

VARISTAR
Electronics 1.10
VARISTAR
EMC. 1.54
VARISTAR
Seismic 1.84
VARISTAR
Datacom and
Networking
Technology 1.124

Cabinets – VARISTAR LHX 3

VARISTAR LHX 3

01007015

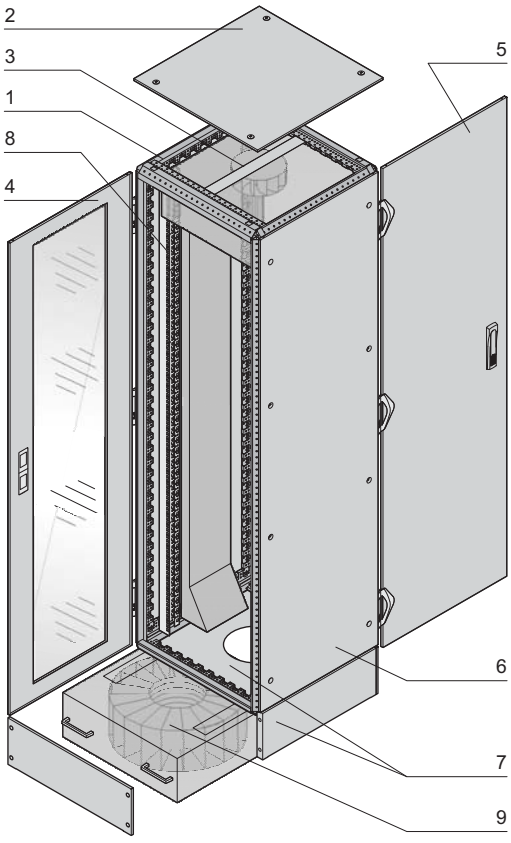

01007061

- Cabinet in accordance with protection class IP 55, RAL 7021, with glass front door
- Air/water heat exchanger (3 kW) in base/plinth (extractable)
- Very low noise level of 45 dB(A)
- Static load-carrying capacity 800 kg (Heavy-Duty frame)

Delivery comprises (completely assembled and earthed)

Item	Qty	Description
1	1	Welded basic frame, Heavy-Duty, St profile, zinc-plated, RAL 7021, IP 55, with all-round gasket
2	1	Flat top cover, St, RAL 7021
3	1	Radial fan, 230 V_{AC}, assembled on cross member, SCHUKO/UTE connector, cable length 1.5 m
4	1	Front door, glass, frame RAL 7021, 180° hinge, multi-point locking, lever handle for optional DIN profile half cylinder
5	1	Rear door, St, RAL 7021, 180° hinge, multi-point interlocking, lever handle for optional DIN profile half cylinder
6	2	Side panel, screwed, St, RAL 7021, with ventilation duct
7	1	Base/plinth with base plate, St, RAL 7021, height 200 mm, removable covers at front and rear, integrated feet; cable ducting to rear, can be sealed with slide covers
8	4	19" panel/slide mount with EIA cut-outs, St, RAL 7021, 175 mm recessed at front, 500 mm distance between front and rear 19" plane
9	1	Air/water heat exchanger, 3 kW, RAL 7021; integrated in base/plinth, extractable
10	1	User manual

Order Information

Height mm	Usable height U	Width mm	Depth mm	Part no.
2000	34	600	800	**10130-193**
2200	38	600	800	**10130-194**
DIN profile half cylinder, common locking for lever handle (1 key fits all locks) incl. 2 keys				**25127-995**
Thermostat with mains/line connector, 230 V_{AC}, SCHUKO/UTE connector, IEC-320 female connector, 1 piece				**20118-750**

Note

- Further dimensions and versions available on request (e.g. with heat exchanger as 19" chassis or with airflow in the rear panel)
- Technical data see page 1.239

Cabinets – VARISTAR LHX 3

Technical data LHX 3

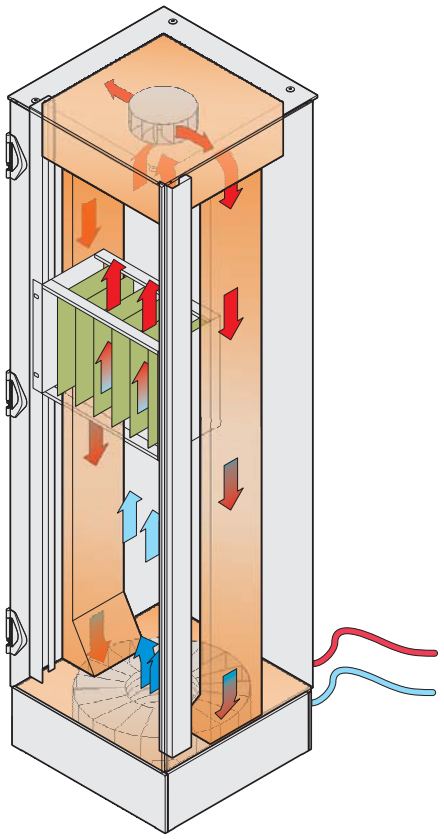

01007055

A fan sucks in the warm air at the top and leads it downwards through the lateral air channels in the side panels to the air/water heat exchanger. The cold air is let into the cabinet at the bottom.

Diagram of LHX 3 characteristics

Usable cooling capacity in kW

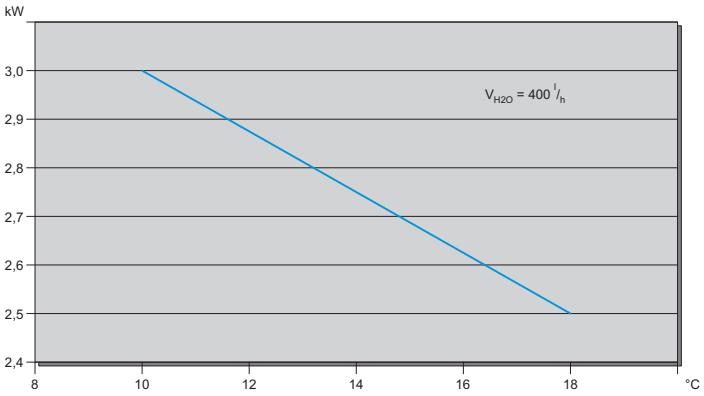

01007076

Incoming water temperature

Technical data LHX 3

Cooling capacity	
Usable cooling capacity (cooling water inlet temperature 10° C, air exit temperature 20° C)	**3 KW**
Water circuit	
Cooling medium [1]	Water
Water inlet temperature [2]	6 ... 16 °C
Water flow volume	up to 2.0 m3/h
Max. water pressure	6 bar
Static pressure loss in device at 0.5 m3/h	0.1 bar
Water conduit	Copper
Water connection inlet/outlet	Rp 1/2"
Connection condensat drain	Ø 10 mm
Air circuit	
Airflow volume	900 m^3/h
Electrical data	
Supply voltage, single phase	230 V_{AC}, 50/60 Hz
Current consumption	0.38 A
Power consumption	85 W
Apparent power at full load	120 VA
Protection fuse	2 A
General Data	
Cabinet type of protection	IP 55
Ambient temperature during transport	-25 ... 70 °C
Ambient temperature outside of cabinet (during operation)	5 ... 70 °C
Relative humidity level	5 ... 95 %
Noise level at 100 % fan performance	45.2 dB(A)
Weight: cabinet/heat exchanger	approx. 115 kg/35 kg
Dimensions of air/water heat exchanger	
Height	199 mm
Width	464 mm
Depth	425 mm (465 mm with handles)

1) For an optimal operation of the air/water heat exchanger the demands on the water quality have to be fulfilled (VDE 3803, please see user manual)

2) If the water inlet temperature falls short of 16 °C the formation of condensation should be anticipated

Cabinets – Novastar

Content

Cabinets 1

Wall mounted cases 2

Accessories for cabinets and wall mounted cases . 3

Climate control . 4

Electronics cases 5

Subracks/ 19" chassis 6

Front panels, plug-in units . . . 7

Systems 8

Power supply units 9

Backplanes . . . 10

Connectors, front panel component system 11

Appendix 12

07011036

Light - slim - robust

The base frame, made in lightweight aluminium, is the basis for your individual NOVASTAR. And now you decide: small or large, in standard depth or with extended space for cabling and heat dissipation, whether as a stand-alone solution or stacked one on top of another and bolted together.
The NOVASTAR platform concept leaves no wish neglected. And regardless of how you put your NOVASTAR together, the internal dimensions remain consistently compatible with 19" technology. Unwanted spaces in either height or width are now a thing of the past.

With a cabinet width of only 553 mm, NOVASTAR is the slimmest of all 19" cabinets. It has a slender, filigreed look, almost like a piece of designer furniture. This impression is further reinforced by the different finishes of the frame and cover trim and the plain, modern full-glass doors.
Because of this, NOVASTAR is not only used in offices and laboratories but also in sound and TV studios. And indeed as a collector's item in the occasional home!

07011023

Simple fitting of side panel without tools

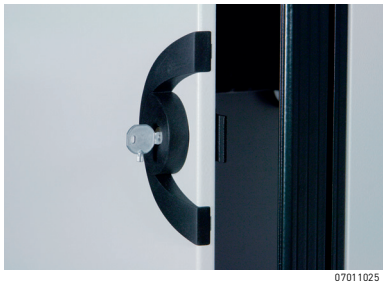

07011025

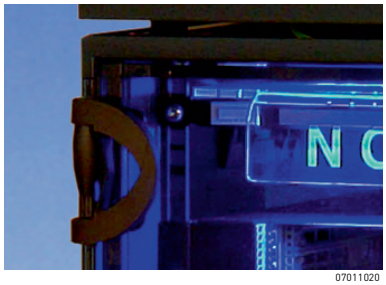

07011020

Door with 180° opening angle thanks to new hinge concept; can be mounted left or right

07011028

Extensive selection of castors

07011022

07011007

Heavy-Duty frame with lateral groove for mounting e.g. of carrier arm systems

Cabinets – Novastar

Overview 1.240

The inNOVAtive 19" electronics cabinet

- Type of protection up to IP 40
- Bolted, die-cast frame with Al extrusions
- Cabinet width only 553 mm
- Static load-carrying capacity up to 400 kg
- Colours: RAL 7021 or colour combination RAL 7021/ RAL 7035

19" cabinet,
with glass door (smoke grey) and rear panel

07011010

- Height of Slim-Line 12 ... 20 U (load-carrying capacity 200 kg)
- Height of Heavy-Duty 38 ... 43 U (load-carrying capacity 400 kg)
- Depth 600, 800 mm

19" cabinet,
door and rear panel combination freely selectable

07011013

- Height of Slim-Line 9 ... 25 U (load-carrying capacity 200 kg)
- Height of Heavy-Duty 34 ... 47 U (load-carrying capacity 400 kg)
- Depth 500, 600, 800 mm
- Door and rear panel can be equipped individually

Standards/Approvals

- External and internal dimensions in accordance with IEC 60297-3-100
- Type of protection IP 40 in accordance with IE 60529
- Earth connections in accordance with DIN EN 50178 / VDE 0160

30407004

ServicePLUS from page 1.261

e.g. individual configuration and assembly
e.g. modifications (cut-outs, special colours)
e.g. custom solutions (cut-outs)
e.g. variants of uprights (Slim-Line, Heavy-Duty)
e.g. custom solutions (special sizes)

www.schroff.biz/ServicePLUS

Dimensions 1.243

NOVASTAR
19" cabinet with smoke tintend glass door and rear panel 1.246
Selectable combination of 19" cabinet, door and rear panel 1.247

Accessories
Doors and cable ducting systems 1.247
Rear panels and cable ducting systems 1.251
Base plates 1.252
Castors 1.253
Bases/plinths 1.254
19" panel/slide mounts 1.255
Depth members .. 1.255
Slide rails 1.256
Shelves 1.258
Support arm system 1.260
Slide nut 1.260

ServicePLUS ... 1.261

Cabinets – Novastar

Novastar configurator

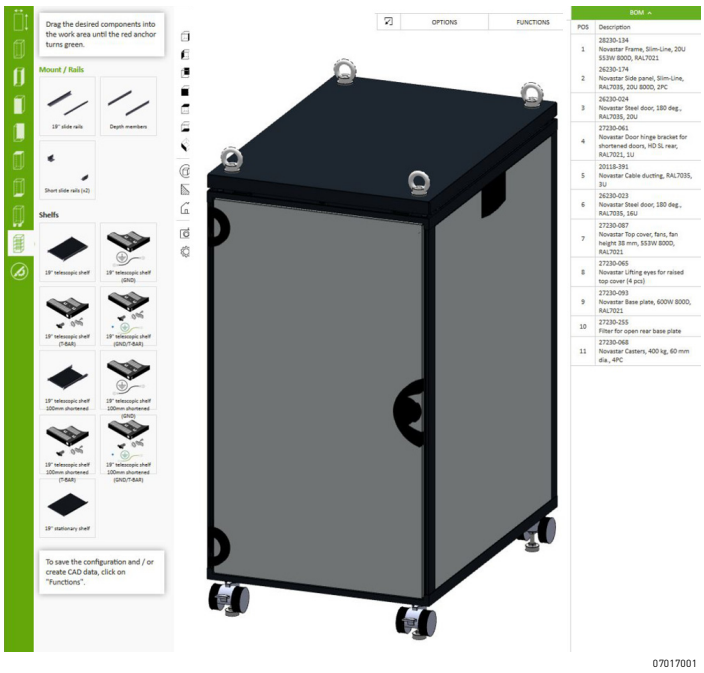

07017001

With the Schroff brand, Pentair offers a wide range of electronics cabinets and other electronic protection products. Instead of restricting the range to a few standard products, Schroff offers bespoke solutions which fulfill the specific requirements of the application. Schroff configurations are easy-to-operate tools which make it possible to configure and modify products quickly and easily: Design Your Standard.
The Novastar configurator is a web-based tool with an intuitive graphical user interface and multilingual menus in English, German, and French. These make configuring Novastar cabinets quick and easy.

Individual solutions are just a click away

- Configurations can start with the frame or by modifying ready-configured or previously configured Novastar cabinets
- Large selection of dimensions, frame types, door types, side panels, top covers, and base plates
- Accessories such as shelves and slide rails can be mounted
- Selection of special cabinet colors
- Cutouts incorporated for switches and connectors or logos, text, and other graphics printed

Real-time 3D CAD model generation

- Real-time display of configured cabinets with all modifications in several views and adjustable transparency
- The configuration adjusts in real time and offers different mounting options
- Real-time generation of 3D CAD models and/or 2D native CAD files in more than 30 CAD file formats for downloading or for immediate further processing and integration into the user's CAD software
- Real-time generation of a bill of materials with all components of the configured cabinet
- Quotes issued quickly for customized Novastar cabinets and an inquiry is simply a click away

Ease of use

- Graphical user interface with drag-and-drop functionality and immediate display of the selected configuration
- Available components are listed as illustrations in the menu for quick access and easy identification
- Intelligent configurator logic indicates where components can be installed, ensures compatibility and shows relevant optional components
- The "U" height scale helps you to position the components correctly
- Components identified with mouse-over functionality
- Components exchanged using simple drag-and-drop functionality or deleted in the bill of materials
- Non-assembled accessories can be added to the bill of materials
- No need to download any programs or apps, or install any software or plug-ins No registration required
- The optional, free user account registration provides access to additional functions

Cabinets – Novastar

Dimension drawings Slim-Line frames

Frame

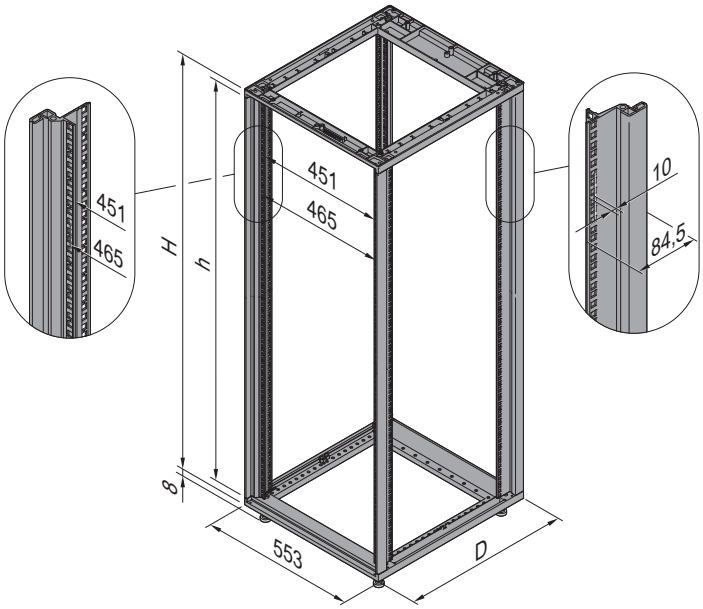

07011094

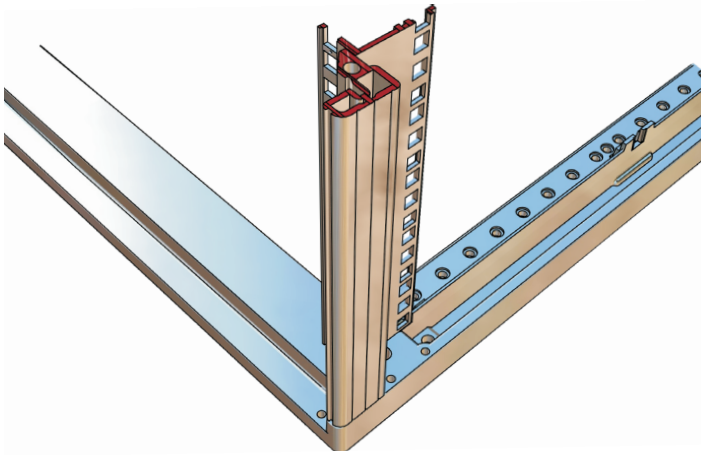

07011093

Frame (top view)

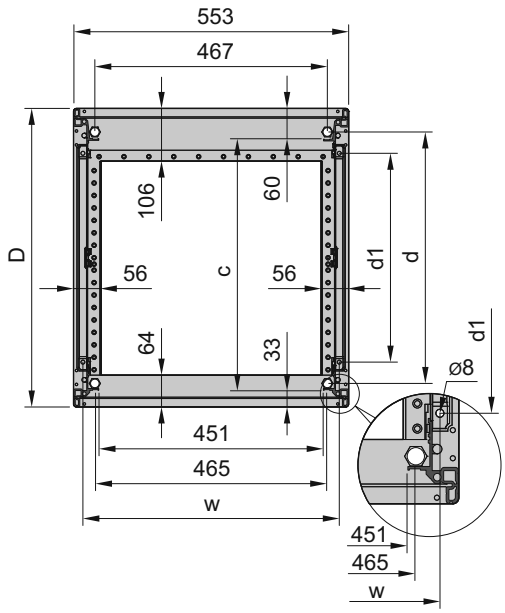

07011098

- Lightweight aluminium die-cast frame and lightweight vertical profile
- Static load-carrying capacity 200 kg, tested in accordance with IEC 61587-1

Frame dimensions

Cabinet height	H	h
U	mm	mm
6	357	268
9	456	401
12	589	535
16	767	713
20	945	890
25	1167	1112
34	1567	1513
38	1745	1690
43	1967	1913
47	2145	2090

Foot height 8 mm

Upright at front/rear

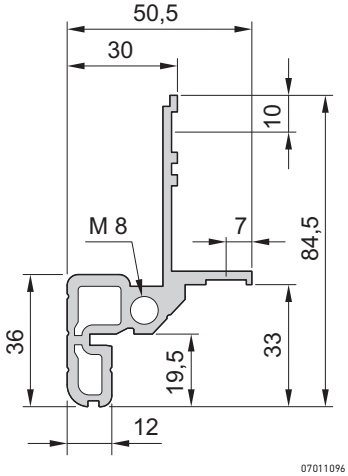

07011096

Upright at rear

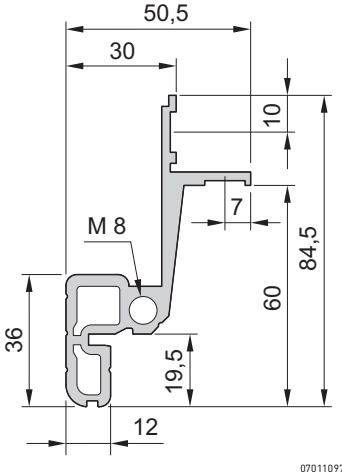

07011097

Frame dimensions

Cabinet depth	Adjustable feet, castors, lifting eye, top cover fixing	19" to 19" plane	Floor mounting	
D	d	c	d1	w
mm	mm	mm	mm	mm
500	405	407	319	515
600	505	507	419	515
800	705	707	619	515
900	805	807	719	515
1000	905	907	819	515

Dimension drawings Heavy-Duty frames

Frame

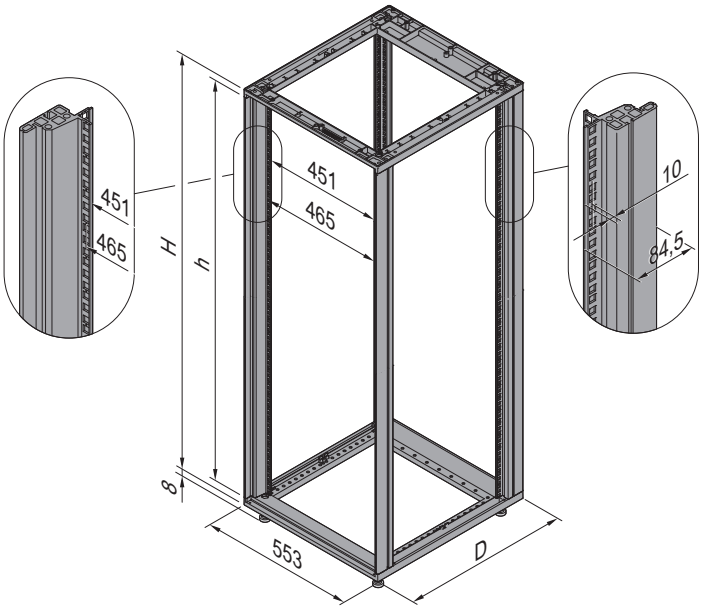

07011095

19" upright

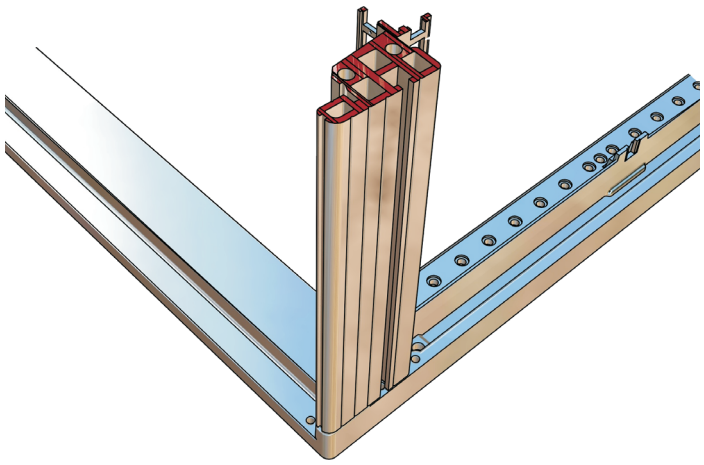

07011092

Frame (top view)

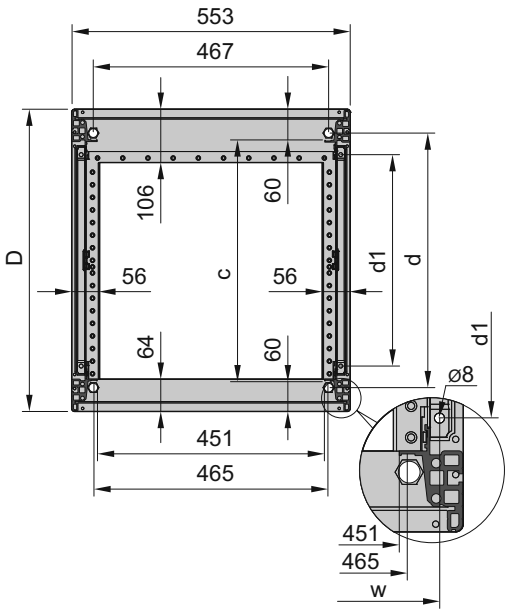

07011100

- Light aluminium die-cast frame and robust vertical profile
- Static load-carrying capacity 400 kg, tested in accordance with IEC 61587-1
- Lateral groove for mounting accessories

Frame dimensions

Cabinet height	H	h
U	mm	mm
12	589	535
16	767	713
20	945	890
25	1167	1112
34	1567	1513
38	1745	1690
43	1967	1913
47	2145	2090
Foot height 8 mm		

19" front / rear upright

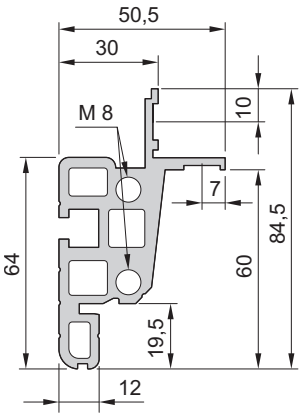

07011099

Frame dimensions

Cabinet depth	Adjustable feet, castors, lifting eye, top cover fixing	19" to 19" plane	Floor mounting	
D	d	c	d1	w
mm	mm	mm	mm	mm
500	405	380	319	515
600	505	480	419	515
800	705	680	619	515
900	805	780	719	515
1000	905	880	819	515

Cabinets – Novastar

Dimensional drawings Heavy-Duty Universal frames

Frame

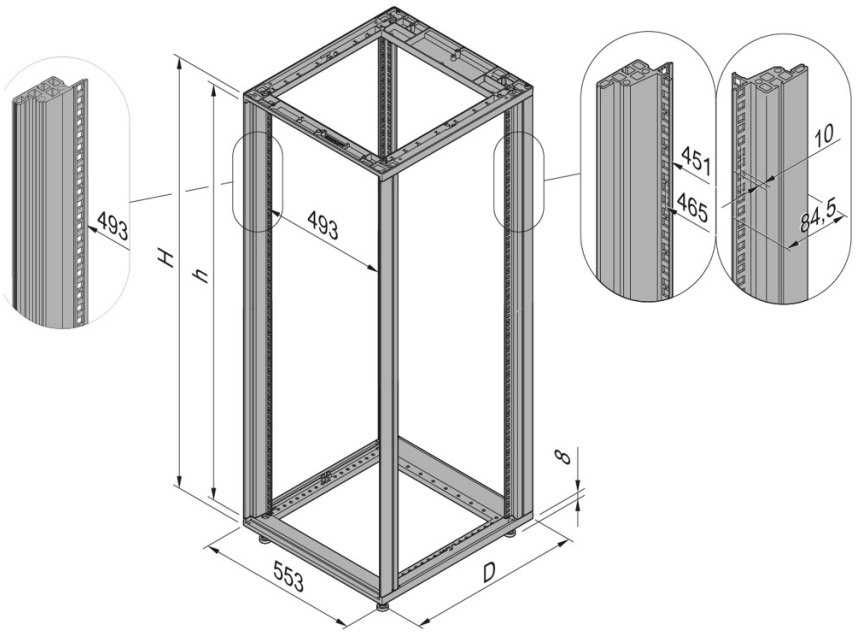

07016081

Universal upright

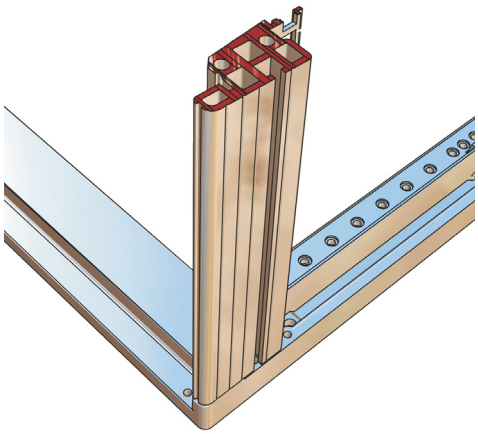

07016002

Frame (top view)

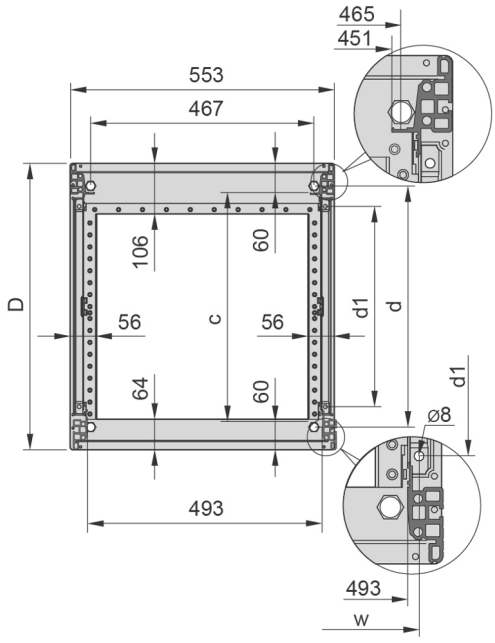

07016082

- Light aluminum die-cast frame and robust vertical profile
- Static load-carrying capacity 400 kg, tested to IEC 61587-1
- Lateral groove for mounting built-on accessories

Rack dimensions

Cabinet height	H	H
U	mm	mm
12	589	535
16	767	713
20	945	890
25	1167	1112
34	1567	1513
38	1745	1690
43	1967	1913
47	2145	2090
Foot height 8 mm		

Universal front upright / 19" rear upright

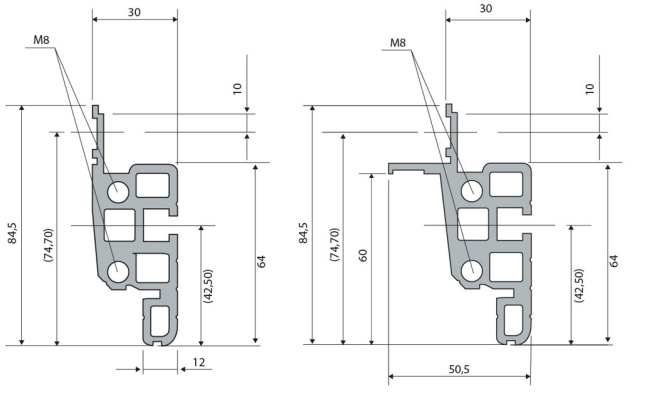

07016083

Rack dimensions

Cabinet depth	Adjustable feet, casters, lift lug, top cover fixing	19" to 19" plane	Base mounting	
D	d	c	d1	w
mm	mm	mm	mm	mm
500	405	380	319	515
600	505	480	419	515
800	705	680	619	515
900	805	780	719	515
1000	905	880	819	515

19" cabinet with glass door (smoke grey) and rear panel

07011010

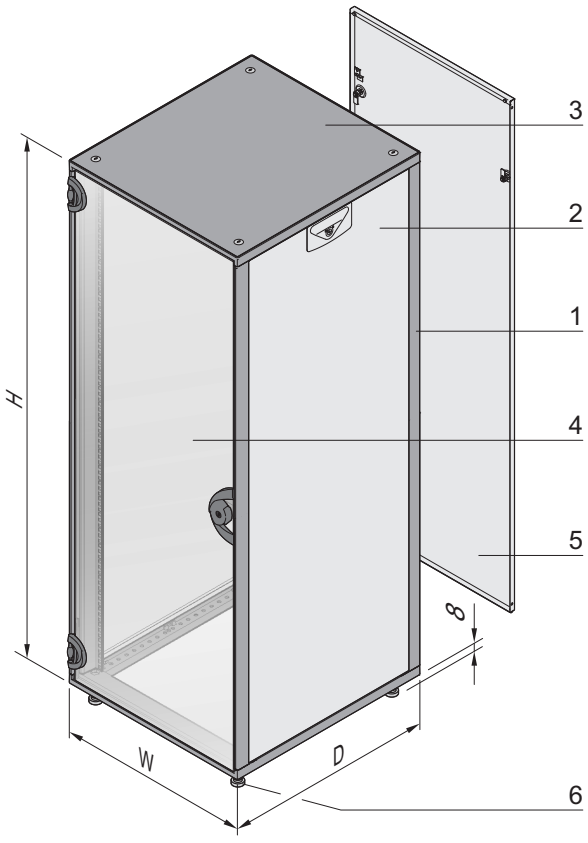

07011050

Spacing to 19" plane:
Slim-Line: front 33 mm, rear 60 mm;
Heavy-Duty: front and rear 60 mm

- All uprights (front and rear) with 19" cut-outs
- Flush cladding parts
- Type of protection IP 20
- 2 cabinet depths (600 mm, 800 mm), cabinet width 553 mm
- Static load-carrying capacity
  - Slim-Line 200 kg (12, 16, 20 U)
  - Heavy-Duty 400 kg (38, 43 U)
- 2 colours
  - RAL 7021 (black grey) throughout
  - Colour combination: side panels, rear panel RAL 7035 (light grey); frame, top cover RAL 7021 (black grey)

Delivery comprises (assembled)

Item	Qty	Description
1	1	Frame, uprights Al extrusion with 19" cut-outs, Al die-cast frame, RAL 7021
2	2	Side panel, St, 1 mm; light grey (RAL 7035) or black grey (RAL 7021), see Order information; twist-locking catch (Torx T30)
3	1	Flush top cover, St, 1 mm, RAL 7021
4	1	Glazed door, single pane safety glass (ESG) 6 mm, smoke grey, with DIN cylinder safety lock and 2 keys (2233x)
5	1	Rear panel, St, 1 mm, light grey (RAL 7035) or black grey (RAL 7021), see Order information
6	4	Foot
7	1	GND/earthing kit

Order Information

Usable height	Height H	Width W	Depth D	Colour RAL 7021	Colour RAL 7035/RAL 7021
U	mm	mm	mm	Part no.	Part no.
Slim-Line					
12	589	553	600	15230-019	**16230-019**
16	767	553	600	15230-020	**16230-020**
20	945	553	600	15230-021	**16230-021**
Heavy-Duty					
38	1745	553	600	15230-022	**16230-022**
38	1745	553	800	15230-023	**16230-023**
43	1967	553	600	15230-024	**16230-024**
43	1967	553	800	15230-025	**16230-025**
Accessories					
Lifting eye for flush cover M12 thread, application and load to DIN 582 PU 4 pieces					**27230-066**

Note

- Please order base plate, base/plinth, slide rails and shelves separately, see from page 1.254
- Castors see page 1.253
- Other accessories/components see ServicePLUS, from page 1.261
- Dimension drawings see from page 1.243

ServicePLUS see page 1.261

Cabinets – Novastar

19" cabinet, door and rear panel combination freely selectable

07011013

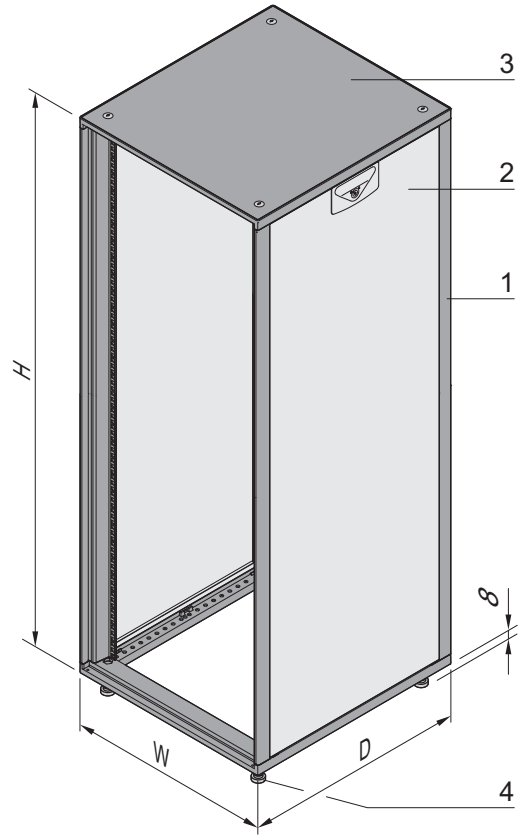

07011051

Spacing to 19" plane:
Slim-Line: front 33 mm, rear 60 mm;
Heavy-Duty: front and rear 60 mm

ServicePLUS see page 1.261

- All uprights (front and rear) with 19" cut-outs
- Flush cladding parts
- Type of protection IP 20
- 3 cabinet depths (500, 600 and 800 mm), cabinet width 553 mm
- Static load-carrying capacity
  - Slim-Line 200 kg (9 U to 25 U)
  - Heavy-Duty 400 kg (34 U to 47 U)
- 2 colours
  - RAL 7021 (black grey) throughout
  - Colour combination: side panels RAL 7035 (light grey); frame, top cover RAL 7021 (black grey)

Delivery comprises (assembled)

Item	Qty	Description
1	1	Frame, uprights Al extrusion with 19" cut-outs, Al die-cast frame, RAL 7021
2	2	Side panel, St, 1 mm; light grey (RAL 7035) or black grey (RAL 7021), see Order information; twist-locking catch (Torx T30)
3	1	Flush top cover, St, 1 mm, RAL 7021
4	4	Foot
5	1	GND/earthing kit

Order Information

Usable height	Height H	Width W	Depth D	Colour RAL 7021	Colour RAL 7035/RAL 7021
U	mm	mm	mm	Part no.	Part no.
Slim-Line					
9	456	553	600	15230-001	**16230-001**
12	589	553	500	15230-002	**16230-002**
12	589	553	600	15230-003	**16230-003**
16	767	553	500	15230-004	**16230-004**
16	767	553	600	15230-005	**16230-005**
20	945	553	500	15230-006	**16230-006**
20	945	553	600	15230-007	**16230-007**
20	945	553	800	15230-008	**16230-008**
25	1167	553	600	15230-009	**16230-009**
25	1167	553	800	15230-010	**16230-010**
Heavy-Duty					
34	1567	553	600	15230-011	**16230-011**
34	1567	553	800	15230-012	**16230-012**
38	1745	553	600	15230-013	**16230-013**
38	1745	553	800	15230-014	**16230-014**
43	1967	553	600	15230-015	**16230-015**
43	1967	553	800	15230-016	**16230-016**
47	2145	553	600	15230-017	**16230-017**
47	2145	553	800	15230-018	**16230-018**
Accessories					
Lifting eye for flush cover M12 thread, application and load to DIN 582 PU 4 pieces					**27230-066**

- Please order doors, rear panel, base plate, base/plinth, slide rails and shelves separately, see from page 1.248
- Castors see page 1.253
- Other accessories/components see ServicePLUS, from page 1.261
- Dimension drawings see from page 1.243

Cabinets – Novastar

Glass door (smoke grey)

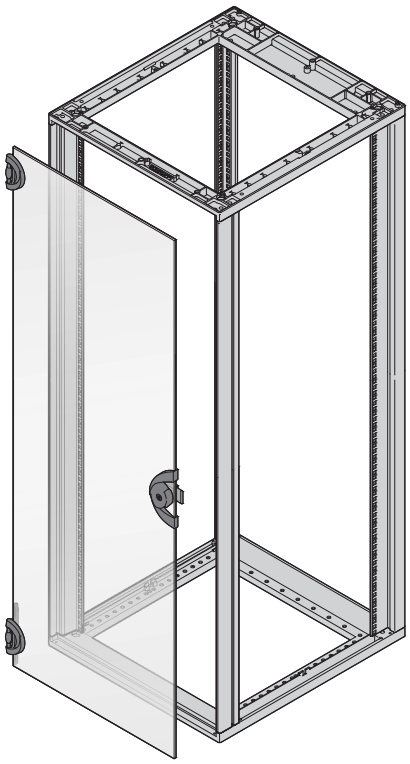

07011059

- Can be assembled at front and rear
- Opening angle 180°

Delivery comprises

Item	Qty	Description
1	1	Glass door, single pane safety glass (ESG) 6 mm, smoke grey; safety lock with DIN cylinder and 1 key (2233x); hinges, plastic, black
2	1	Assembly kit

Order Information

For cabinet height U	Height mm	Part no.
9	422	**27230-002**
12	555	**27230-003**
16	733	**27230-004**
20	911	**27230-005**
25	1133	**27230-006**
29	1345	**27230-028**
34	1534	**27230-007**
38	1711	**27230-008**
43	1933	**27230-009**
47	2111	27230-010

Glazed acrylic glass door

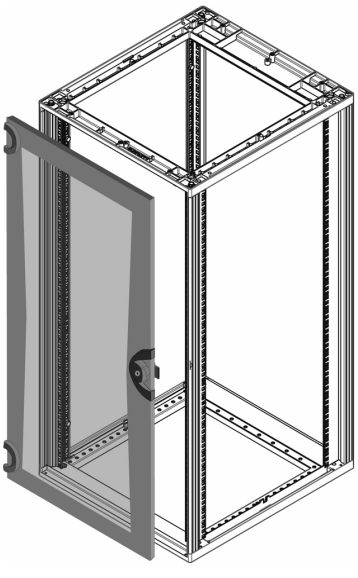

07016054

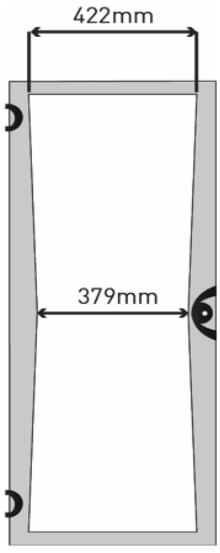

07016053

- Mounting front or rear
- Opening angle 180°
- Lock with key
- Frame color black gray (RAL 7021) or light gray (RAL 7035)

Delivery includes

Item	Qty.	Description
1	1	Door frame, St, 1.5 mm
2	1	Acrylic sheet, 2 mm, clear
3	1	Lock (2233x) with 1 key
4	1	Fixing materials kit including GND

Order Information

For cabinet height U	For cabinet height mm	Colour RAL 7021 Part no.	Colour RAL 7035 Part no.
6	322	25230-092	26230-092
9	456	25230-093	26230-093
12	589	25230-094	26230-094
16	767	25230-095	26230-095
20	945	25230-096	26230-096
25	1167	25230-097	26230-097
29	1345	25230-102	26230-102
34	1567	25230-098	26230-098
38	1745	25230-099	26230-099
43	1967	25230-100	26230-100
47	2145	25230-101	26230-101
Accessories			
Spare key 1 piece			**60127-018**

Cabinets – Novastar

Steel door

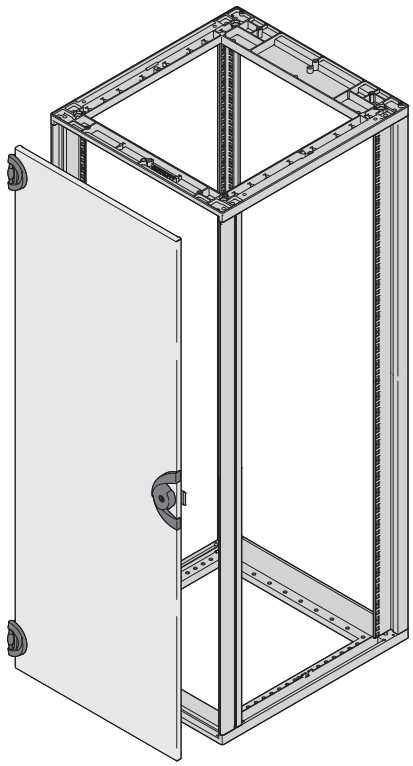

- Can be assembled at front and rear
- Opening angle 180°
- Colour black grey (RAL 7021) or light grey (RAL 7035)

Delivery comprises

Item	Qty	Description
1	1	Steel door, St, 1.5 mm; safety lock with DIN cylinder and 1 key (2233x); hinges, plastic, black
2	1	Fixing material kit and GND/earthing kit

Order Information

For cabinet height	Height	Colour RAL 7021	Colour RAL 7035
U	mm	Part no.	Part no.
9	422	25230-021	**26230-021**
12	555	25230-022	**26230-022**
16	733	25230-023	**26230-023**
20	911	25230-024	**26230-024**
25	1133	25230-025	**26230-025**
29	1345	25230-030	**26230-030**
34	1534	25230-026	**26230-026**
38	1711	25230-027	**26230-027**
43	1933	25230-028	26230-028
47	2111	25230-029	26230-029
Accessories			
Spare key 1 piece			**60127-018**

Perforated door

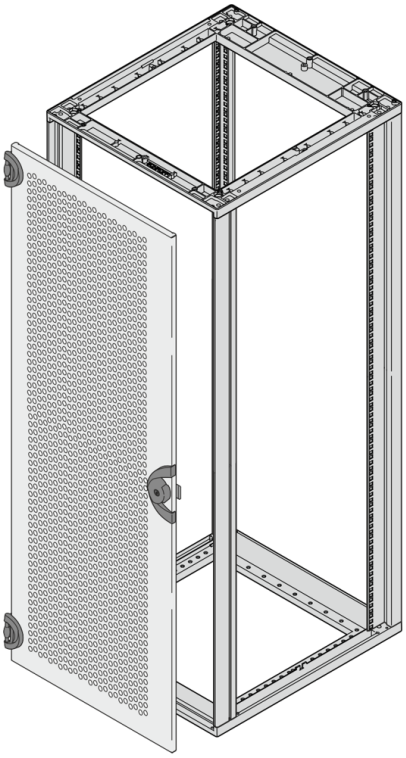

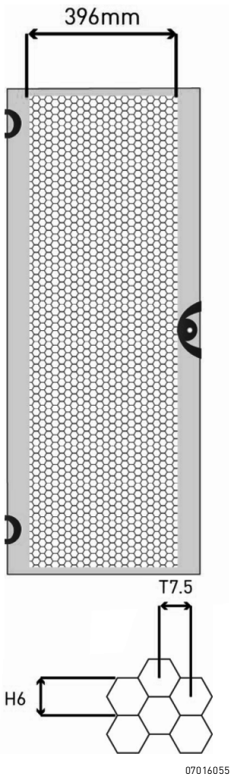

- Can be mounted at front and rear
- Perforated (60 % ventilation opening)
- Opening angle 180°
- Lock with key (2233X)
- Colors RAL 7035 and RAL 7021

Delivery includes

Item	Qty.	Description
1	1	Door, perforated, St, 1.5 mm, width 553 mm, 60 % ventilation opening, see order information for color
2	2	Hinge, 180° opening angle
3	1	Lock with single key (2233X)
2	1	Earthing (GND) kit

Order Information

For cabinet height	Height	Colour RAL 7021	Colour RAL 7035
U	mm	Part no.	Part no.
6	288.4	25230-081	26230-081
9	421.75	25230-082	26230-082
12	555.1	25230-083	26230-083
16	732.9	25230-084	26230-084
20	910.7	25230-085	26230-085
25	1132.95	25230-086	26230-086
29	1310.75	25230-091	26230-091
34	1533	25230-087	26230-087
38	1710.8	25230-088	26230-088
43	1933.05	25230-089	26230-089
47	2110.85	25230-090	26230-090
Accessories			
Spare key 1 piece			**60127-018**

Cable ducting combination for steel door

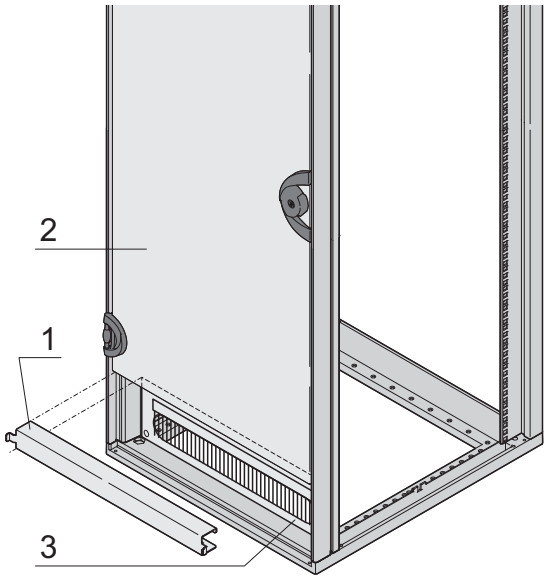

- For a cable ducting combination a steel door, a door hinge bracket and a frame for cable ducting are required
- Cable ducting can be at top or bottom
- Frame with brush strip for cable ducting is either 3 U or 4 U, depending on cabinet/door height

Delivery comprises

Item	Qty	Description
1	1	Door hinge bracket, St, 2 mm, RAL 7021 requires 1 U fitting space, mounts above or below the steel door
2	1	Steel door, St, 1.5 mm, lock (2233x) with 1 key, opening angle 180°, GND/earthing
3	1	Frame for cable ducting, St, 2.5 mm, with black brush strip, 3 U (for cabinet heights 16, 20, 38, 47 U) 4 U (for cabinet heights 25, 34, 43 U)

Order Information

Height (U)	Steel door		Steel door Perforated		Glass door	Door hinge bracket for doors			
	RAL 7035	RAL 7021	RAL 7035	RAL 7021	smoke grey	Slim-Line front 33 mm	Slim-Line rear 60 mm	Heavy-Duty front/rear 60 mm	19" plane for universal upright
	St, 1.5 mm, lock (2233x) with 1 key, openingangle 180, incl. GND/earthing		St, 1.5 mm, perforated, opening angle 180°, lock with key (2233X), incl. grounding		opening angle 180°, lock with key, glass type: ESG 6 mm, EN 12150	door hinge bracket, St, 2 mm, RAL 7021; mounts above or below the door; requires 1 U assembly space		door hinge bracket, St, 2 mm, RAL 7021; mounts above or below the door; requires 1 U assembly space	St, 2 mm, RAL 7021 1) Height 3 U 2) Height 4 U
16	**26230-022**	25230-022	26230-084	25230-084	**27230-004**	**27230-060**	**27230-061**	27230-098	1) 27230-162
20	**26230-023**	25230-023	26230-085	25230-085	**27230-005**	**27230-060**	**27230-061**	27230-098	1) 27230-162
25	**26230-024**	25230-024	26230-086	25230-086	**27230-006**	**27230-060**	**27230-061**	27230-098	2) 27230-163
34	**26230-030**	25230-030	26230-087	25230-087	**27230-007**	**27230-060**	**27230-061**	27230-098	2) 27230-163
38	**26230-026**	25230-026	26230-088	25230-088	**27230-008**	**27230-060**	**27230-061**	27230-098	1) 27230-162
43	**26230-027**	25230-027	26230-089	25230-089	**27230-009**	**27230-060**	**27230-061**	27230-098	2) 27230-163
47	26230-028	25230-028	26230-090	25230-090	27230-010	**27230-060**	**27230-061**	27230-098	1) 27230-162

Height (U)	Cable ducting		
	RAL 7035 Screw fixed	RAL 7021 Screw fixed	RAL 7021 clipped
	St, 2.5 mm, with black brush strip 1) Height 3 U 2) Height 4 U		
16	1) **20118-391**	1) **20118-796**	1) 27230-160
20	1) **20118-391**	1) **20118-796**	1) 27230-160
25	2) **20118-390**	2) **20118-797**	2) 27230-161
34	2) **20118-390**	2) **20118-797**	2) 27230-161
38	1) **20118-391**	1) **20118-796**	1) 27230-160
43	2) **20118-390**	2) **20118-797**	2) 27230-161
47	1) **20118-391**	1) **20118-796**	1) 27230-160

Cabinets – Novastar

Rear panel

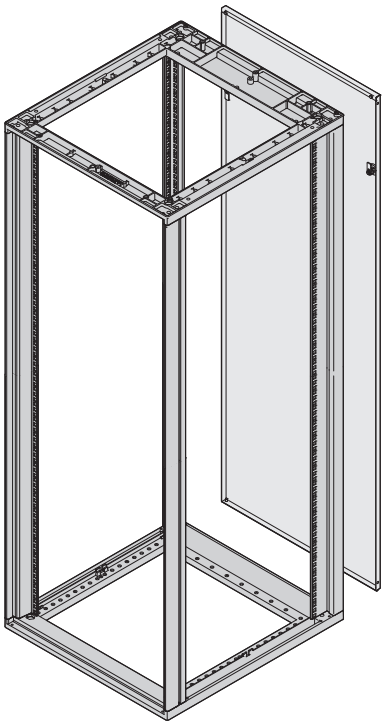

07011057

- Twist-locking catch (Torx T30, with 1/4 turn)
- Rear panel: colour black grey (RAL 7021) or light grey (RAL 7035)

Delivery comprises

Item	Qty	Description
1	1	Rear panel, St, 1 mm, twist-locking catch (Torx T30, with 1/4 turn)
2	1	Assembly kit

Order Information

For cabinet height	Height	Colour RAL 7021	Colour RAL 7035
U	mm	Part no.	Part no.
9	422	25230-371	**26230-371**
12	555	25230-372	**26230-372**
16	733	25230-373	**26230-373**
20	911	25230-374	**26230-374**
25	1133	25230-375	**26230-375**
29	1345	25230-147	26230-147
34	1534	25230-376	**26230-376**
38	1711	25230-377	**26230-377**
43	1933	25230-378	**26230-378**
47	2111	25230-379	26230-379

Rear panel with cable ducting frame

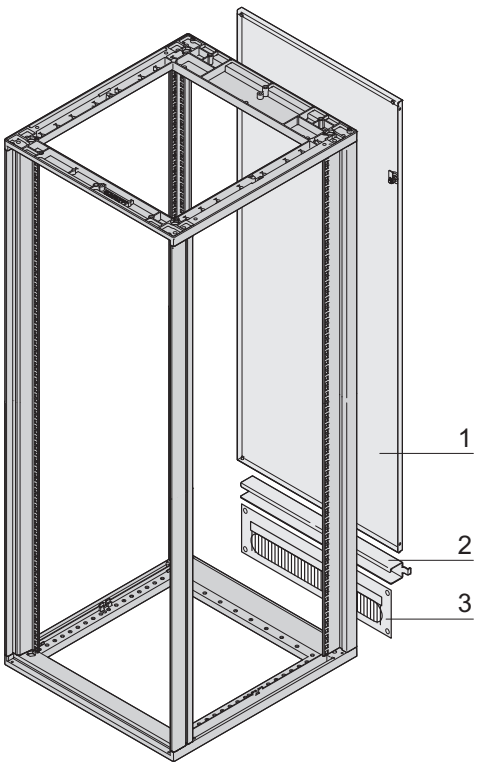

07011058

- Twist-locking catch (Torx T30, with 1/4 turn)
- Rear panel: colour black grey (RAL 7021) or light grey (RAL 7035)
- Cable ducting frame 3 or 4 U

Delivery comprises

Item	Qty	Description
1	1	Rear panel, St, 1 mm, colour see Order information; twist-locking catch (Torx T30, with 1/4 turn)
2	1	Door hinge bracket, St, 2 mm, colour see Order information
3	1	Frame for cable ducting, St, 1.5 mm, colour see Order information; brush strip; 3 U frame for cable ducting for cabinet heights 16, 20, 38, 47 U; 4 U frame for cable ducting for cabinet heights 25, 34, 43 U
4	1	Assembly kit and GND/earthing kit

Order Information

For cabinet height	Height	For cabinet width	Colour RAL 7021	Colour RAL 7035
U	mm	mm	Part no.	Part no.
16	733	553	25230-430	**26230-430**
20	911	553	25230-434	**26230-434**
25	1133	553	25230-439	**26230-439**
34	1534	553	25230-448	**26230-448**
38	1711	553	25230-452	**26230-452**
43	1933	553	25230-457	**26230-457**
47	2111	553	25230-461	26230-461

Base plate, multi-piece

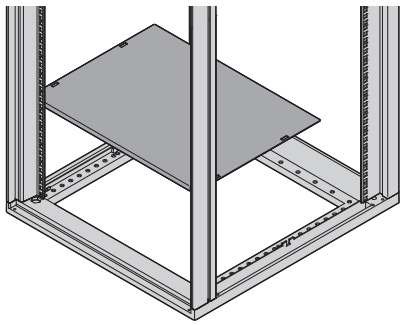

07011073

Accessories

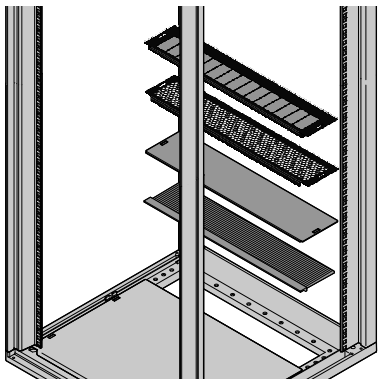

07016050

- Floor is open at rear; Opening can be closed with a cover plate or brush strip

Delivery includes

Item	Qty	Description
1	1	Base plate, St, 1.5 mm, RAL 7021; cable through-ducting opening, width 440 mm, depth 70 mm
2	1	Assembly kit

Order Information

For cabinet depth mm	For cabinet width mm	Part no.
500	553	27230-188
600	553	27230-189
800	553	27230-190
1000	553	27230-191
1200	553	27230-192
Accessories		
Brush strip Nylon, black, 440 mm x 98 mm, PU 1 piece		**27230-079**
Solid cover plate for floor, multi-piece, St, 1 mm, 485 mm x 92 mm, RAL 7021, 1 piece		**27230-114**
Perforated cover plate for floor, multi-piece St, 1 mm, 485 mm x 92 mm, RAL 7021, 1 piece		**27230-254**
Filter mat cover plate for floor, multi-piece St, 1 mm, 485 mm x 92 mm, RAL 7021, 1 piece		**27230-255**

Note

- Please order cover plate or brush strip separately

Base plate, single piece, reinforced, with cutouts for cable ducting

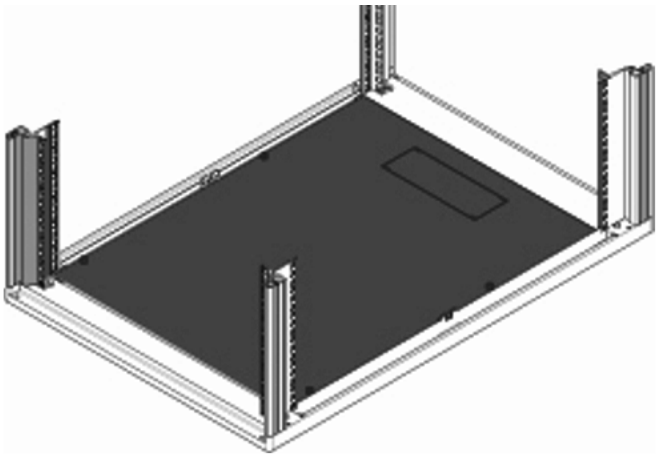

07016059

Reinforced brush strip for floor

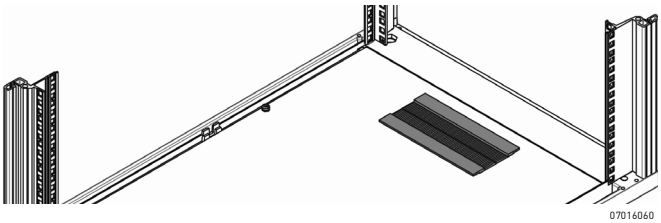

07016060

- Heavy-load floor panel
- Load-carrying capacity 50 kg (110 lbs)
- Cutout for cable ducting

Delivery includes

Item	Qty.	Description
1	1	Base plate, St, 2,5 mm, RAL 7021; cable ducting opening, perforated, width 370 mm, depth 50 mm
2	1	Fixing materials kit including GND

Order Information

For cabinet depth mm	For cabinet width mm	Qty/PU piece	Part no. RAL 7021
500	553	1	25230-149
600	553	1	25230-150
800	553	1	25230-151
900	553	1	25230-152
1000	553	1	25230-153
Accessories			
Brush strip for heavy-load floor panel Nylon, black, width 370 mm, depth 50 mm 1 piece			27230-055

Note

- Please order brush strip separately

Cabinets – Novastar

Castors

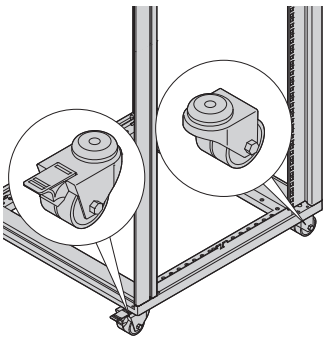

Load-carrying capacity 200 kg

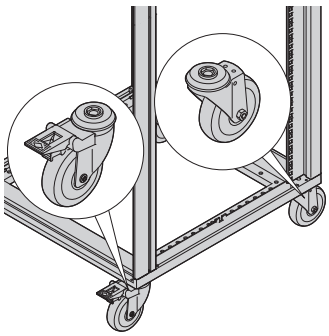

Load-carrying capacity 300 kg, conductive,
ESD resistance < 10 kΩ

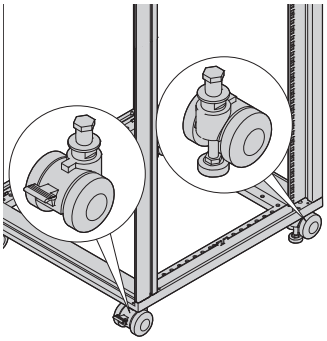

Load-carrying capacity 400 kg, with adjustable feet

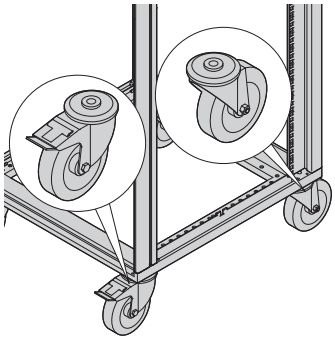

Load-carrying capacity 400 kg

- Castors are fitted to the frame
- Static load-carrying capacity 200 kg, 300 kg or 400 kg depending on version
- Height dependent on version 73 mm, 80 mm, 131 mm or 155 mm
- 2 castors without jacking foot, 2 castors with jacking foot

Delivery comprises

Item	Qty	Description
1	2	Locking castor, PA/St
2	2	Non-locking castor, PA/St
3	1	Assembly kit

Order Information

Description	Load-carrying capacity kg	Height H mm	Castor diameter mm	Part no.
Castors	200	73	Ø 50	**27230-067**
Castors, conductive, ESD resistance < 10 kΩ to EN 12528	300	131	Ø 100	**27230-110**
Castors with adjustable feet	400	80	Ø 60	**27230-068**
Castors	400	155	Ø 125	**27230-069**

Base/plinth with cable ducting

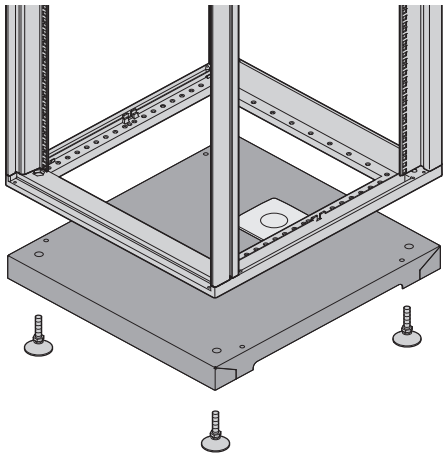

07011075

- Static load-carrying capacity 400 kg
- Height adjustable 57 .... 67 mm
- Cable ducting (110 x 76 mm) with cover

Delivery comprises (assembled)

Item	Qty	Description
1	1	Base/plinth, St, 1.5 mm, height 55 mm, RAL 7021; cable ducting 110 mm x 76 mm, with plastic cover
2	4	Adjustable foot
3	1	Assembly kit and GND/earthing kit

Order Information

For cabinet width mm	For cabinet depth mm	Part no.
553	500	**27230-070**
553	600	**27230-071**
553	800	**27230-072**
553	900	27230-076
553	1000	27230-080
Accessories		
Brush strip Nylon, black, 110 mm x 76 mm; to cover cable through-ducting opening , 1 piece		**27230-111**

Mobile base/plinth

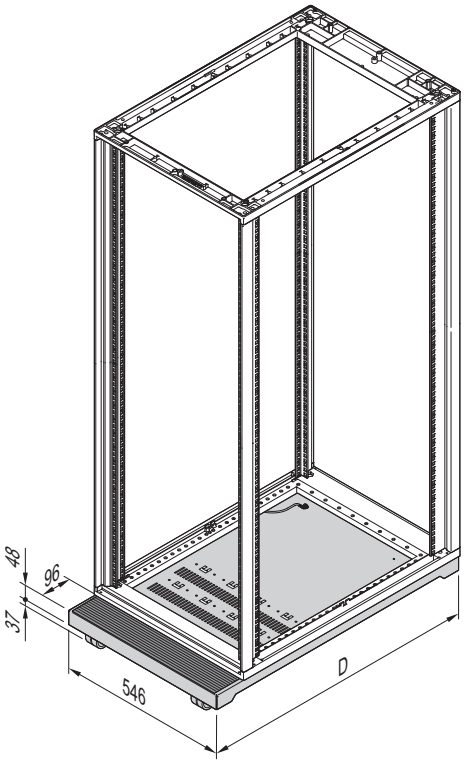

07011113

- Static load-carrying capacity 200 kg
- Base/plinth height H = 100 mm

Delivery comprises

Item	Qty	Description
1	1	Base/plinth, St, 2 mm, black (RAL 7021), with perforation, height = 100 mm
2	1	Fine-grooved mat, natural rubber, anthracite, 3 mm thick, self-adhesive
3	4	Castors, St, Ø 55 mm, load-carrying capacity 200 kg
4	1	Assembly kit

Order Information

For cabinet depth mm	D mm	Part no.
500	592	**27230-146**
600	692	**27230-147**
800	892	**27230-148**

Cabinets – Novastar

Depth members

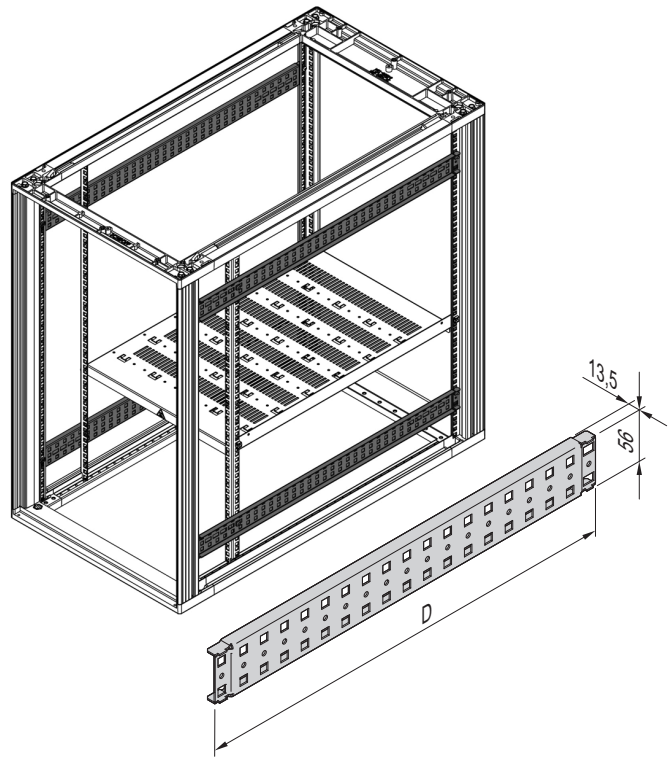

- For assembly on cabinet uprights
- Adjustable in 1 U increments

Delivery includes

Item	Qty	Description
1	1	Depth member, St, 1.5 mm, finish AlZn

Order Information

For cabinet depth	D	Part no.
mm	mm	
500	366	27230-167
600	466	27230-168
800	666	27230-169
900	766	27230-170
1000	866	27230-171

19" panel/slide mounts with universal perforation grid (EIA)

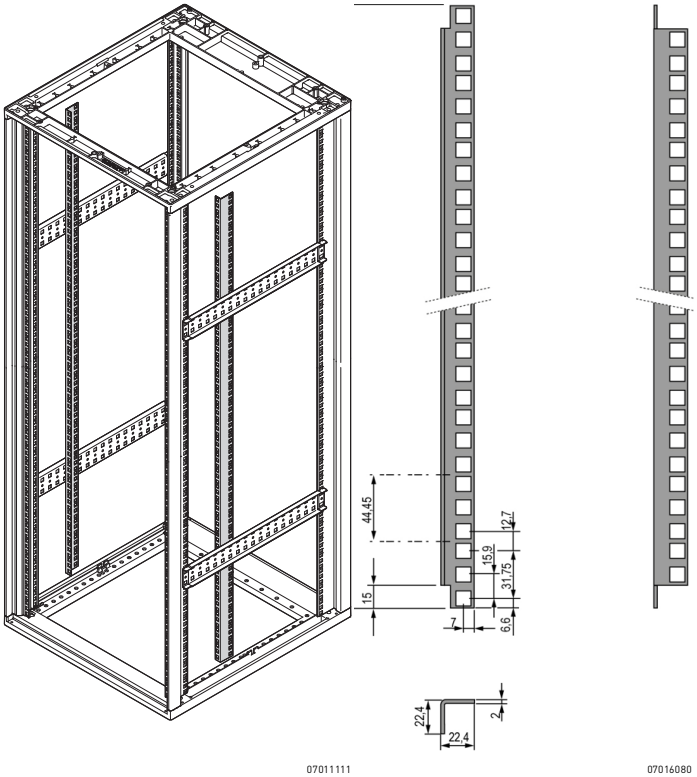

19" panel/slide mount mounted on depth members

- For fitting to depth members (25 mm grid)
- For recessed installation of 19" components
- Load-carrying capacity 400 kg
- Slide rails can be fitted
- A partial-height 19" mounting is possible with short 19" panel/slide mounts

Delivery includes

Item	Qty	Description
1	2	19" panel/slide mount, St, 2 mm, RAL 7021
2	1	Assembly kit

Order Information

For cabinet height		Usable height	H	Part no.
U	mm	U	mm	
6	Partial-height mounting	6	267	27230-172
9	456	9	400	27230-173
12	589	12	534	27230-174
16	767	16	712	27230-175
20	945	20	889	27230-176
25	1167	25	1112	27230-177
34	1567	34	1512	27230-178
38	1745	38	1690	27230-179
43	1967	43	1912	27230-180
47	2145	47	2090	27230-181

- Slide rails see page 1.256
- Depth members are required for fitting, see page 1.255

19" plane for universal upright

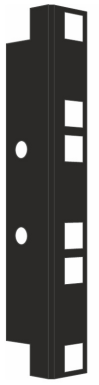

3 U

4 U

- Panel/slide mount for installing on the universal profile
- A 19" plane can be implemented using the panel/slide mount

Delivery includes

Item	Qty.	Description
1	4	19" panel/slide mount, St, 2 mm, RAL 7021
2	1	Fixing materials kit

Order Information

Height U	Height mm	Qty/PU piece	Part no.
3	130	2	27230-162
4	170	2	27230-163

Slide rail

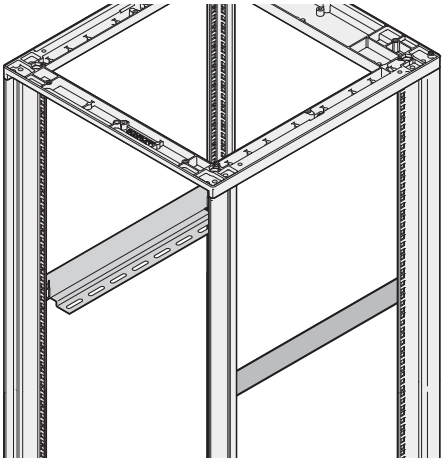

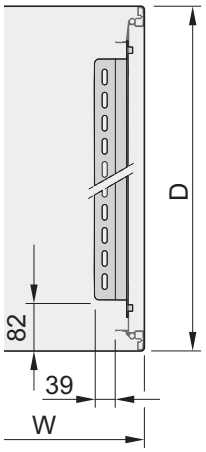

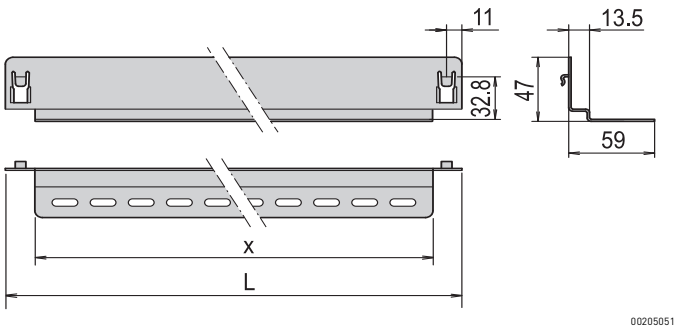

- For mounting on the vertical cabinet uprights or 19" panel/slide mounts
- Adjustable in 1 U increments
- Static load-carrying capacity 25 kg per pair

Delivery comprises

Item	Qty	Description
1	2	Slide rail, St, 1.5 mm, finish AlZn
2	1	Assembly kit

Order Information

For cabinet depth D mm	L mm	x mm	Part no.
500	370	322	**27230-102**
600	470	422	**27230-103**
800	670	622	**27230-104**
900	770	822	27230-105
1000	970	922	27230-106

Cabinets – Novastar

Heavy-load slide rail

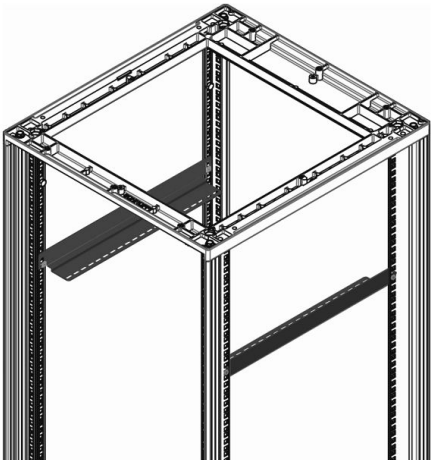

07016066

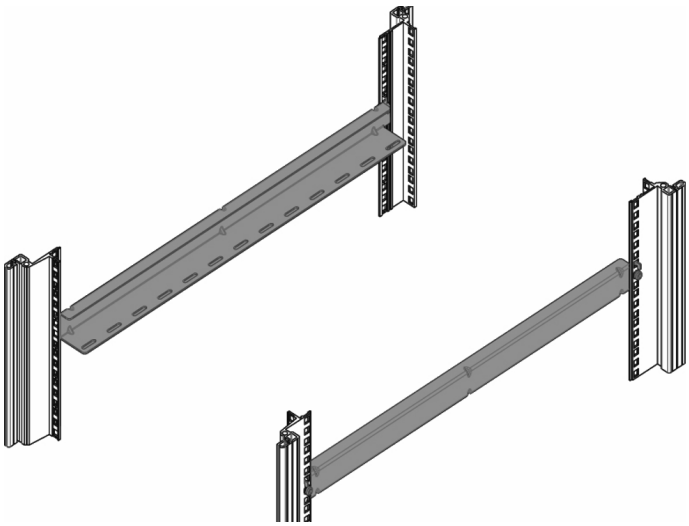

07016084

- For mounting on the vertical cabinet uprights or 19" panel/slide mounts
- Adjustable in 1 U increments
- Static load-carrying capacity 50 kg per pair
- 900, 1000 mm depth for server applications

Delivery includes

Item	Qty.	Description
1	2	Slide rail, St, 2 mm, finish AlZn
2	1	Fixing materials kit

Order Information

For cabinet depth D mm	L mm	x mm	Part no.
500	272	322	25230-013
600	370	422	25230-014
800	470	522	25230-015
900	670	722	25230-145
1000	870	822	25230-146
900, 1000 mm for server applications	740	692	25230-148
Accessories			
Fixing materials kit for heavy-load slide rail 1 set (4 x M5x12 screws, 4 x M5 cage nuts, screwed in from the inside)			27230-056

Short slide rail

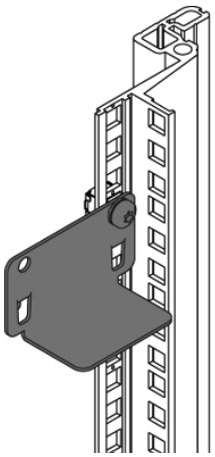

07016065

- For mounting on the cabinet uprights or 19" panel/slide mounts
- Adjustable in 1 U increments
- Static load-carrying capacity max. 15 kg per pair

Delivery comprises

Item	Qty	Description
1	2 / 10	Short slide rail, St, 1.5 mm, finish AlZn
2	1	Assembly kit

Order Information

Description	Qty/PU piece	Part no.
Short slide rail	2	27230-184
Short slide rail	10	27230-185

Shelf, stationary

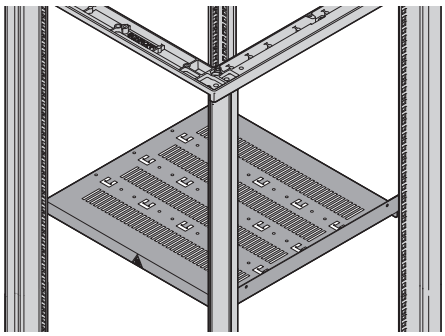

07011077

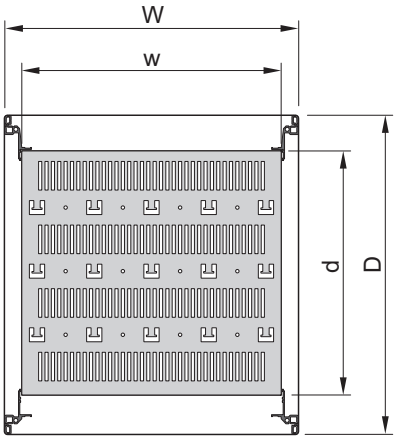

07011105

W = 553 mm

- Static load-carrying capacity 75 kg
- Mounting height 1 U, for fitting on the vertical cabinet uprights
- Hammer head perforation for fixing cables using cable ties or Velcro-type tape
- 900, 1000 mm Tiefe für Server Anwendungen

Delivery includes

Item	Qty	Description
1	1	Shelf with perforation, St, 1.5 mm, RAL 7021
2	1	Assembly kit

Order Information

For cabinet depth D mm	Usable surface w x d mm	Part no.
500	488 x 350	**27230-051**
600	488 x 450	**27230-052**
800	488 x 650	**27230-053**
900	488 x 750	27230-088
1000	488 x 850	27230-089
900, 1000 mm für Serveranwendungen	488 x 740	27230-165
Accessories		
Cable ties 92 mm x 2.5 mm, PU 25 pieces		**20118-351**
Cable ties 186 mm x 5 mm, PU 25 pieces		**20118-352**
Cable ties 360 mm x 5 mm, PU 25 pieces		**20118-353**
Velcro strip Polyethylen/Polyamide, black, length 300 mm, PU 10 pieces		**20118-624**

Cabinets – Novastar

Telescopic shelf, 70 kg

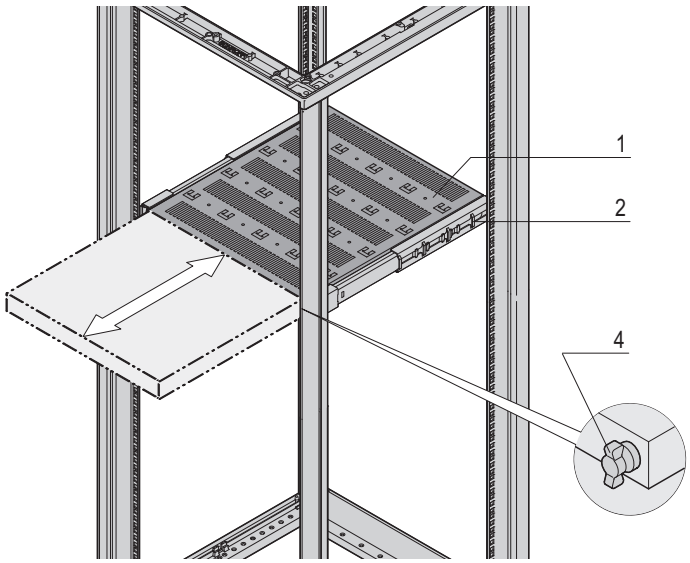

- Static load-carrying capacity at full extension 70 kg
- Mounting height 2 U, for fitting to the four vertical uprights
- Incl. telescopic slides
- Locking possible with T-bar lock
- Hammer head perforation for fixing cables using cable ties or Velcro-type tape
- 2 versions
  - Full depth
  - Depth shortened by 100 mm for rear cable ducting

Delivery comprises

Item	Qty	Description
1	1	Shelf with perforation, St, 1.5 mm, RAL 7021
2	2	Telescopic slide
3	1	Assembly kit

Full depth

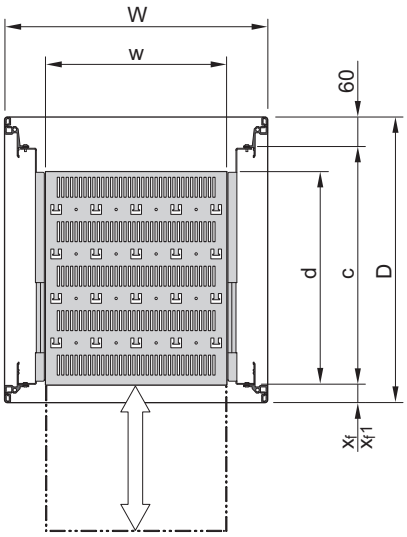

Order Information

Full depth

Cabinet dimensions W x D	Usable surface w x d	x_f	x_f1	c	Full depth
mm	mm	mm	mm	mm	Part no.
553 x 500	405 x 382	33	60	407	**21130-357**
553 x 600	405 x 482	33	60	507	**21130-353**
553 x 800	405 x 682	33	60	687	**21130-355**
533 x 900, 740 mm für Serveranwendungen	405 x 582	33	60	787	27230-108
533 x 1000	405 x 682	33	60	887	27230-109
Item 4 T-bar lock for 1 telescopic shelf (can be mounted right or left), 1 piece					**23130-092**
GND/earthing for telescopic shelf PU 1 piece					**21120-189**

Shortened depth

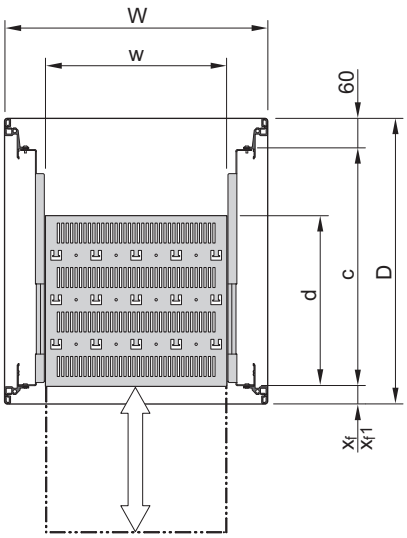

Order Information

Shortened by 100 mm

Cabinet dimensions W x D	Usable surface w x d	x_f	x_f1	c	Shortened by 100 mm
mm	mm	mm	mm	mm	Part no.
553 x 500	405 x 282	33	60	407	**21130-358**
553 x 600	405 x 382	33	60	507	**21130-352**
553 x 800	405 x 582	33	60	687	**21130-354**
533 x 900, 740 mm für Serveranwendungen	405 x 582	33	60	787	27230-108
533 x 1000	405 x 682	33	60	887	27230-109
Item 4 T-bar lock for 1 telescopic shelf (can be mounted right or left), 1 piece					**23130-092**
GND/earthing for telescopic shelf PU 1 piece					**21120-189**

c = pitch of 19" profiles; x_f, = Slim-Line assembly dimensions;
x_f1 = Heavy-Duty assembly dimensions

Support arm for monitor and keyboard (SysPend®)

00511006

- Support arm for mounting of monitor, keyboard and mouse on cabinet
- Fixing is to the side of the Heavy-Duty frame (height adjustable)
- Static load-carrying capacity 3 ... 7 kg
- Support arm:
  - Height-adjustable 300 mm
  - Angle of rotation on cabinet 180 °
  - Monitor rotation angle 340° (fitted on cabinet 270°)
  - Monitor tilt angle 60°
  - Integrated cable routing
- Suitable for industrial applications

Delivery comprises

Item	Qty	Description
1	1	Support arm frame, Al extrusion, RAL 7035, rotatable, height adjustable
2	1	Wall-mounting bracket, for mounting on cabinet or wall, hinged sideways through 180°
3	1	Keyboard storage point, tiltable upward through 95°, width 480 mm, depth 170 mm; mouse pad: width 150 mm, depth 190 mm
4	1	Monitor holder for flat-screen units, hinged through 340°, tiltable through 60° (15° forwards, 45° to rear)

Order Information

Description	Qty/PU pieces	Part no.
Support arm for monitor and keyboard (SysPend®)	1	VAMONITOR
Accessories		
Mounting material for cabinet exterior PU 4 pieces		27230-144

00511004

Support arm fitted with monitor and keyboard

00511003

Cable ducting

Mounting material for cabinet exterior

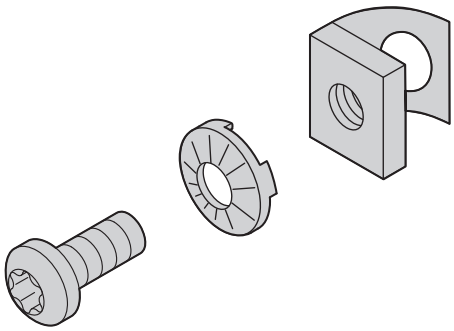

06712050

- For mounting accessories to cabinet exterior (e.g. support arm)
- Slide nut (M6) is simply inserted into the side T-groove of the Heavy-Duty frame

Delivery comprises

Item	Qty	Description
1	1	Slide nut M6
2	1	Pan head screw M6 x 16 (Torx T30)
3	1	Nomel washer 6.1

Order Information

Description	Qty/PU pieces	Part no.
Mounting material for cabinet exterior	4	27230-144

Cabinets – Novastar Service Plus

ServicePLUS: configuration and assembly

- Dimensions:
  - Height: 6 ... 47 U (357 ... 2145 mm)
  - Width: 553 mm
  - Depth: 500, 600, 800, 900, 1000 mm
- 3 frame versions:
  - Slim-Line, static load-carrying capacity 200 kg, height 6 ... 47 U
  - Heavy-Duty, static load-carrying capacity 400 kg, 19" + Universal, height 16 ... 47 U
- Configure your cabinet from individual parts (to have them assembled please add the suffix **/05** to each part number)
- Once you have selected your cabinet dimensions, the row number (first column of the configuration tables) guides you through all the pages of the configurations possible for these dimensions (see example below)
- The configured cabinet is assembled and is ready for despatch within 10 working days

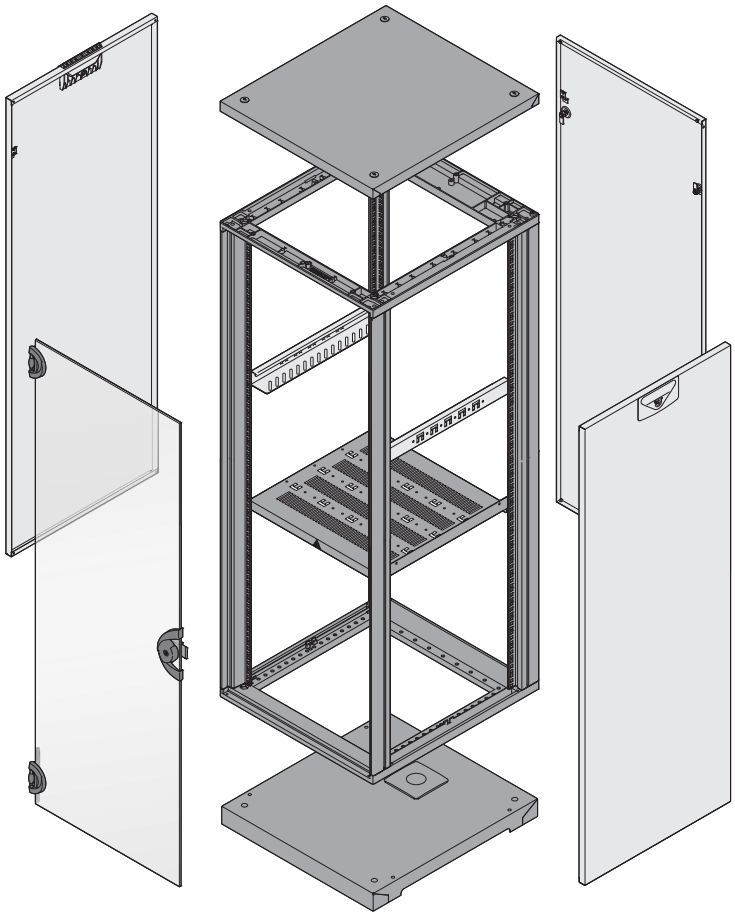

07011052

	Page
Frames, gasketing kit, side-by-side mounting kit, stacking kit	1.262
Castors, adjustable feet	1.263
Side panels	1.264
Glass doors, steel doors	1.265
Cable ducting for steel doors	1.266
Rear panels	1.267
Top covers	1.268
Fan top covers, lifting eye, thermostat, speed controller	1.269
Floors	1.270
Base/plinth	1.271
19" panel/slide mounts, depth members, shelves	1.272
Shelves	1.273
Slide rails	1.274
Cable ties, Velcro-type tape	1.275

Configuration example, assembled (here: row no. 11)

Qty	Description	Order no.
1	Frame, Slim-Line, usable height 20 U, height 945 mm, width 553 mm, depth 500 mm, 1 piece	28230-015/05
1	Side panel, Slim-Line, height 20 U, depth 500 mm, RAL 7035, PU 2 pieces	26230-074/05
1	Glass door (smoke grey), height 20 U, opening angle 180°, width 553 mm, 1 piece	27230-005/05
1	Rear panel, height 20 U, width 553 mm, RAL 7035, PU 1 piece	26230-374/05
1	Top cover, raised, width 553 mm, depth 500 mm, RAL 7021, 1 piece	25230-010/05
..	.....	.....

Cabinets – Novastar Service Plus

Frames, gasketing kit, side-by-side mounting kit, stacking kit

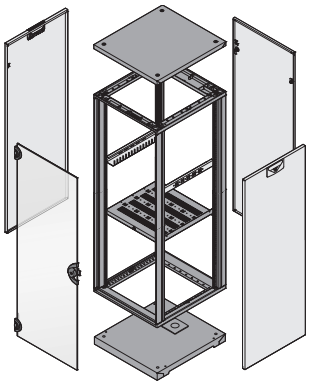

07011053

static load-carrying capacity: 200 kg, Al extrusion, RAL 7021, incl. GND/earthing; 19" plane 33 mm at front, 60 mm at rear; please order castors or adjustable feet separately

07011054

static load-carrying capacity: 400 kg, Al extrusion, RAL 7021, incl. GND/earthing; 19" plane 60 mm at front, 60 mm at rear; please order castors or adjustable feet separately

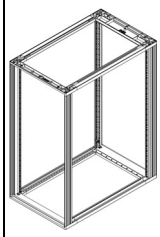

07016056

Static load-carrying capacity: 400 kg, Al profile, RAL 7021, incl. grounding; 19" plane rear 60 mm, castors or adjustable feet ordered separately

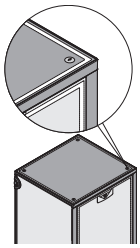

07012050

TPE, black; raises ingress protection from IP 20 to IP 40; gaskets are affixed onto the frame

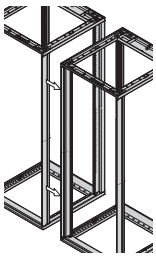

07011080

gasket, foam adhesive tape: PU foam anthracite; for joining two adjacent cabinets

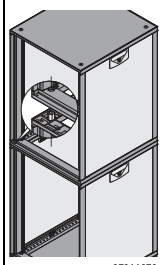

07011070

for joining two cabinets positioned one above the other

aza43431

St, M6, for lateral mounting of accessories on the T-groove of the Heavy-Duty frame

	Cabinet dimensions				Frame			Gasketing kit for IP 40	Side-by-side mounting kit	Stacking kit	Slide nut for T-groove
					Slim-Line 200 kg	Heavy-Duty 400 kg, 19"	Heavy-Duty, 400 kg, Universal				
	Height		Width	Depth	1 piece	1 piece	1 piece	PU 1 kit	PU 1 kit	PU 1 kit	PU 4 pieces
No.	U	mm	mm	mm	assembled	assembled	assembled	assembled	enclosed loose	enclosed loose	enclosed loose
1	6	357	553	500	28230-001	–	–	27230-107	**20230-409**	**27230-112**	**27230-144**
2	6	357	553	600	28230-060						
3	9	456	553	500	28230-004	–	–	27230-107	**20230-409**	**27230-112**	**27230-144**
4	9	456	553	600	28230-063						
5	12	589	553	500	28230-007	–	28230-057	27230-107	**20230-409**	**27230-112**	**27230-144**
6	12	589	553	600	28230-066	–	28230-058				
7	12	589	553	800	28230-126	–	28230-059				
8	12	589	553	900	28230-054	28230-056	28230-107				
9	12	589	553	1000	28230-055	28230-189	28230-108				
10	16	767	553	500	28230-011	28230-310	28230-109	27230-107	**20230-409**	**27230-112**	**27230-144**
11	16	767	553	600	28230-070	28230-370	28230-110				
12	16	767	553	800	28230-130	28230-430	28230-111				
13	16	767	553	900	28230-190	28230-192	28230-112				
14	16	767	553	1000	28230-191	28230-193	28230-113				
15	20	945	553	500	28230-015	28230-314	28230-114	27230-107	**20230-409**	**27230-112**	**27230-144**
16	20	945	553	600	28230-074	28230-374	28230-115				
17	20	945	553	800	28230-134	28230-434	28230-116				
18	20	945	553	900	28230-194	28230-196	28230-117				
19	20	945	553	1000	28230-195	28230-197	28230-118				
20	25	1167	553	500	28230-020	28230-319	28230-119	27230-143	**20230-409**	**27230-112**	**27230-144**
21	25	1167	553	600	28230-079	28230-379	28230-167				
22	25	1167	553	800	28230-139	28230-439	28230-168				
23	25	1167	553	900	28230-198	28230-200	28230-169				
24	25	1167	553	1000	28230-199	28230-201	28230-170				
25	34	1567	553	500	28230-029	28230-328	28230-171	27230-143	**20230-409**	**27230-112**	**27230-144**
26	34	1567	553	600	28230-088	28230-388	28230-172				
27	34	1567	553	800	28230-148	28230-448	28230-173				
28	34	1567	553	900	28230-202	28230-204	28230-174				
29	34	1567	553	1000	28230-203	28230-205	28230-175				
30	38	1745	553	500	28230-033	28230-332	28230-176	27230-143	**20230-409**	**27230-112**	**27230-144**
31	38	1745	553	600	28230-092	28230-392	28230-177				
32	38	1745	553	800	28230-152	28230-452	28230-178				
33	38	1745	553	900	28230-206	28230-208	28230-179				
34	38	1745	553	1000	28230-207	28230-209	28230-180				
35	43	1967	553	500	28230-048	28230-337	28230-181	27230-143	**20230-409**	**27230-112**	**27230-144**
36	43	1967	553	600	28230-097	28230-397	28230-182				
37	43	1967	553	800	28230-157	28230-457	28230-183				
38	43	1967	553	900	28230-210	28230-212	28230-184				
39	43	1967	553	1000	28230-211	28230-213	28230-185				
40	47	2145	553	500	28230-042	28230-341	28230-186	27230-143	**20230-409**	**27230-112**	**27230-144**
41	47	2145	553	600	28230-101	28230-401	28230-187				
42	47	2145	553	800	28230-162	28230-461	28230-188				
43	47	2145	553	900	28230-214	28230-216	28230-052				
44	47	2145	553	1000	28230-215	28230-217	28230-053				

Cabinets – Novastar Service Plus

Castors, adjustable feet

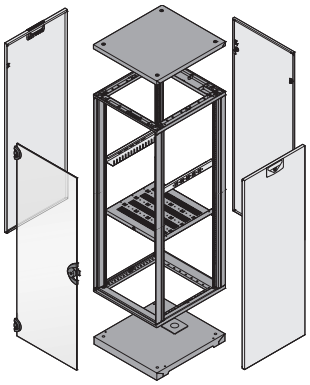

	Cabinet dimensions				Castors				Adjustable foot
					Load-carrying capacity 200 kg	Load-carrying capacity 300 kg, conductive	Load-carrying capacity 400 kg, Ø 60 mm	Load-carrying capacity 400 kg, Ø 125 mm	
					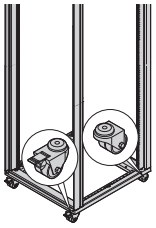	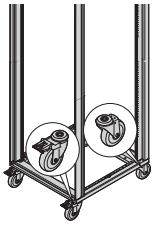	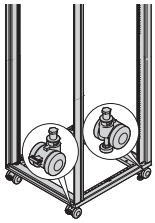	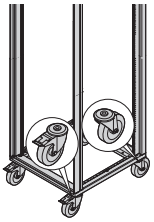	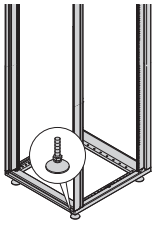
					07011065 static load-carrying capacity 200 kg, height 73 mm, Ø 50 mm, 2 castors without jacking foot, 2 castors with jacking foot	07011066 static load-carrying capacity 300 kg, height 131 mm, Ø 100 mm, 2 castors without jacking foot, 2 castors with jacking foot; EN 12528 (resistance < 10 kΩ)	07011067 static load-carrying capacity 400 kg, height 80 mm, Ø 60 mm, 2 castors without jacking foot, 2 castors with jacking foot, incl. 4 adjustable feet	07011068 static load-carrying capacity 400 kg, height 155 mm, Ø 125 mm, 2 castors without jacking foot, 2 castors with jacking foot	07011069 static load-carrying capacity 400 kg, St, polyamide, black
	Height		Width	Depth	PU 1 kit assembled	PU 1 kit assembled	PU 1 kit assembled	PU 1 kit assembled	PU 1 kit assembled
No.	U	mm	mm	mm					
1	6	357	553	500	27230-067	27230-110	27230-068	27230-069	27230-100
2	6	357	553	600					
3	9	456	553	500	27230-067	27230-110	27230-068	27230-069	27230-100
4	9	456	553	600					
5	12	589	553	500	27230-067	27230-110	27230-068	27230-069	27230-100
6	12	589	553	600					
7	12	589	553	800					
8	12	589	553	900					
9	12	589	553	1000					
10	16	767	553	500	27230-067	27230-110	27230-068	27230-069	27230-100
11	16	767	553	600					
12	16	767	553	800					
13	16	767	553	900					
14	16	767	553	1000					
15	20	945	553	500	27230-067	27230-110	27230-068	27230-069	27230-100
16	20	945	553	600					
17	20	945	553	800					
18	20	945	553	900					
19	20	945	553	1000					
20	25	1167	553	500	27230-067	27230-110	27230-068	27230-069	27230-100
21	25	1167	553	600					
22	25	1167	553	800					
23	25	1167	553	900					
24	25	1167	553	1000					
25	34	1567	553	500	27230-067	27230-110	27230-068	27230-069	27230-100
26	34	1567	553	600					
27	34	1567	553	800					
28	34	1567	553	900					
29	34	1567	553	1000					
30	38	1745	553	500	27230-067	27230-110	27230-068	27230-069	27230-100
31	38	1745	553	600					
32	38	1745	553	800					
33	38	1745	553	900					
34	38	1745	553	1000					
35	43	1967	553	500	27230-067	27230-110	27230-068	27230-069	27230-100
36	43	1967	553	600					
37	43	1967	553	800					
38	43	1967	553	900					
39	43	1967	553	1000					
40	47	2145	553	500	27230-067	27230-110	27230-068	27230-069	27230-100
41	47	2145	553	600					
42	47	2145	553	800					
43	47	2145	553	900					
44	47	2145	553	1000					

Cabinets – Novastar Service Plus

Side panels

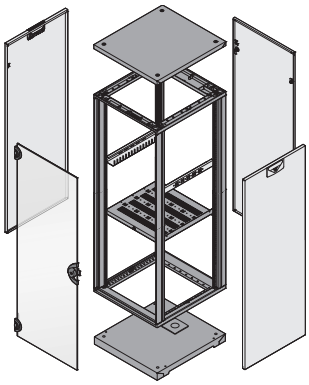

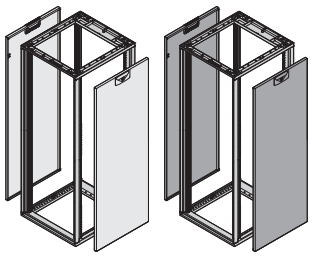

07011055 07011084

St, 1 mm, with quarter-turn fastener; incl. GND/earthing

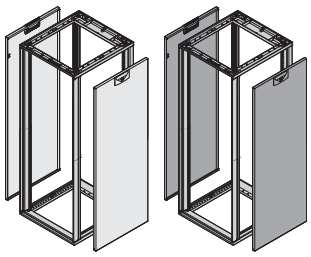

07011056 07011085

St, 1 mm, with quarter-turn fastener; incl. GND/earthing

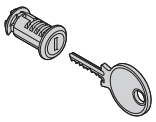

07011108

2 locks (2233x locking), 2 keys; suitable for 2 side panels

	Cabinet dimensions				Side panel				Side panel lock
					Slim-Line		Heavy-Duty		
	Height		Width	Depth	RAL 7035	RAL 7021	RAL 7035	RAL 7021	
No.	U	mm	mm	mm	PU 2 pieces assembled	PU 2 pieces assembled	PU 2 pieces assembled	PU 2 pieces assembled	PU 1 kit assembled
1	6	357	553	500	26230-070	25230-070	–	–	27230-115
2	6	357	553	600	26230-120	25230-120			
3	9	456	553	500	26230-071	25230-071	–	–	27230-115
4	9	456	553	600	26230-121	25230-121			
5	12	589	553	500	26230-072	25230-072	26230-222	25230-222	27230-115
6	12	589	553	600	26230-122	25230-122	26230-272	25230-272	
7	12	589	553	800	26230-172	25230-172	26230-322	25230-322	
8	12	589	553	900	26230-113	25230-113	26230-067	25230-067	
9	12	589	553	1000	26230-114	25230-114	26230-068	25230-068	
10	16	767	553	500	26230-073	25230-073	26230-223	25230-223	27230-115
11	16	767	553	600	26230-123	25230-123	26230-273	25230-273	
12	16	767	553	800	26230-173	25230-173	26230-323	25230-323	
13	16	767	553	900	26230-115	25230-115	26230-069	25230-069	
14	16	767	553	1000	26230-116	25230-116	26230-080	25230-080	
15	20	945	553	500	26230-074	25230-074	26230-224	25230-224	27230-115
16	20	945	553	600	26230-124	25230-124	26230-274	25230-274	
17	20	945	553	800	26230-174	25230-174	26230-324	25230-324	
18	20	945	553	900	26230-117	25230-117	26230-103	25230-103	
19	20	945	553	1000	26230-118	25230-118	26230-104	25230-104	
20	25	1167	553	500	26230-075	25230-075	26230-225	25230-225	27230-115
21	25	1167	553	600	26230-125	25230-125	26230-275	25230-275	
22	25	1167	553	800	26230-175	25230-175	26230-325	25230-325	
23	25	1167	553	900	26230-119	25230-119	26230-105	25230-105	
24	25	1167	553	1000	26230-130	25230-130	26230-106	25230-106	
25	34	1567	553	500	26230-076	25230-076	26230-226	25230-226	27230-115
26	34	1567	553	600	26230-126	25230-126	26230-276	25230-276	
27	34	1567	553	800	26230-176	25230-176	26230-326	25230-326	
28	34	1567	553	900	26230-131	25230-131	26230-107	25230-107	
29	34	1567	553	1000	26230-132	25230-132	26230-108	25230-108	
30	38	1745	553	500	26230-077	25230-077	26230-227	25230-227	27230-115
31	38	1745	553	600	26230-127	25230-127	26230-277	25230-277	
32	38	1745	553	800	26230-177	25230-177	26230-327	25230-327	
33	38	1745	553	900	26230-133	25230-133	26230-109	25230-109	
34	38	1745	553	1000	26230-134	25230-134	26230-110	25230-110	
35	43	1967	553	500	26230-078	25230-078	26230-228	25230-228	27230-115
36	43	1967	553	600	26230-128	25230-128	26230-278	25230-278	
37	43	1967	553	800	26230-178	25230-178	26230-328	25230-328	
38	43	1967	553	900	26230-135	25230-135	26230-111	25230-111	
39	43	1967	553	1000	26230-136	25230-136	26230-112	25230-112	
40	47	2145	553	500	26230-079	25230-079	26230-229	25230-229	27230-115
41	47	2145	553	600	26230-129	25230-129	26230-279	25230-279	
42	47	2145	553	800	26230-179	25230-179	26230-329	25230-329	
43	47	2145	553	900	26230-137	25230-137	26230-040	25230-040	
44	47	2145	553	1000	26230-138	25230-138	26230-041	25230-041	

Cabinets – Novastar Service Plus

Glass doors, steel doors

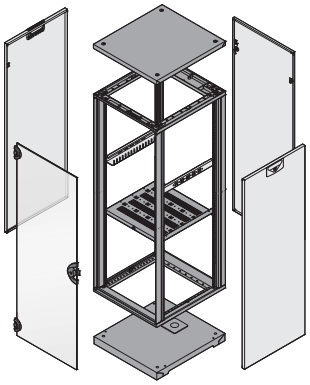

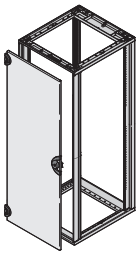

07011060 07011088

Steel door

St, 1.5 mm, lock (2233x) with 1 key, opening angle 180, incl. GND/earthing

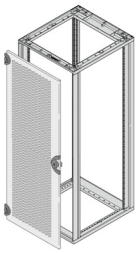

07016078

Steel door Perforated

St, 1.5 mm, perforated, opening angle 180°, lock with key (2233X), incl. grounding

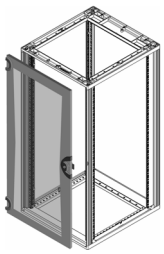

07011060 07016054

Glazed door

Door frame, St, 1.5 mm; acrylic glass, 2 mm; safety lock with 2 keys

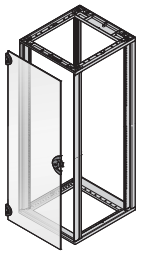

07011059

Glass door

opening angle 180°, lock with key, glass type: ESG 6 mm, EN 12150

No.	Cabinet dimensions Height U	Height mm	Width mm	Depth mm	Steel door RAL 7035 1 piece assembled	Steel door RAL 7021 1 piece assembled	Steel door Perforated RAL 7035 1 piece assembled	Steel door Perforated RAL 7021 1 piece assembled	Glazed door RAL 7035 1 piece assembled	Glazed door RAL 7021 1 piece assembled	Glass door smoke grey 1 piece assembled
1	6	357	553	500	**26230-020**	25230-020	26230-081	25230-081	26230-092	25230-092	27230-001
2	6	357	553	600							
3	9	456	553	500	**26230-021**	25230-021	26230-082	25230-082	26230-093	25230-093	**27230-002**
4	9	456	553	600							
5	12	589	553	500	**26230-022**	25230-022	26230-083	25230-083	26230-094	25230-094	**27230-003**
6	12	589	553	600							
7	12	589	553	800							
8	12	589	553	900							
9	12	589	553	1000							
10	16	767	553	500	**26230-023**	25230-023	26230-084	25230-084	26230-095	25230-095	**27230-004**
11	16	767	553	600							
12	16	767	553	800							
13	16	767	553	900							
14	16	767	553	1000							
15	20	945	553	500	**26230-024**	25230-024	26230-085	25230-085	26230-096	25230-096	**27230-005**
16	20	945	553	600							
17	20	945	553	800							
18	20	945	553	900							
19	20	945	553	1000							
20	25	1167	553	500	**26230-025**	25230-025	26230-086	25230-086	26230-097	25230-097	**27230-006**
21	25	1167	553	600							
22	25	1167	553	800							
23	25	1167	553	900							
24	25	1167	553	1000							
25	34	1567	553	500	**26230-026**	25230-026	26230-087	25230-087	26230-098	25230-098	**27230-007**
26	34	1567	553	600							
27	34	1567	553	800							
28	34	1567	553	900							
29	34	1567	553	1000							
30	38	1745	553	500	**26230-027**	25230-027	26230-088	25230-088	26230-099	25230-099	**27230-008**
31	38	1745	553	600							
32	38	1745	553	800							
33	38	1745	553	900							
34	38	1745	553	1000							
35	43	1967	553	500	26230-028	25230-028	26230-089	25230-089	26230-100	25230-100	**27230-009**
36	43	1967	553	600							
37	43	1967	553	800							
38	43	1967	553	900							
39	43	1967	553	1000							
40	47	2145	553	500	26230-029	25230-029	26230-090	25230-090	26230-101	25230-101	27230-010
41	47	2145	553	600							
42	47	2145	553	800							
43	47	2145	553	900							
44	47	2145	553	1000							

Cable ducting for steel doors

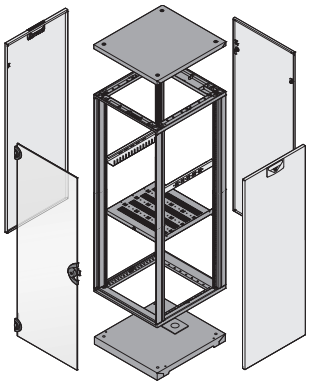

Cable ducting for steel door with door hinge bracket and frame

Steel door

RAL 7035

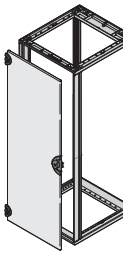

07011060

RAL 7021

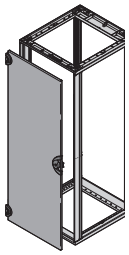

07011088

St, 1.5 mm, lock (2233x) with 1 key, opening angle 180, incl. GND/earthing

Door hinge bracket for doors

Slim-Line front

Slim-Line rear, Heavy-Duty front/rear, Universal rear

Heavy-Duty Universal front

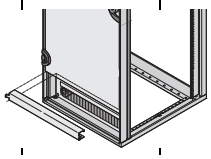

07011061

door hinge bracket, St, 2 mm, RAL 7021; mounts above or below the door; requires 1 U assembly space

Heavy-Duty Universal: Short 19" planes are required to mount the door hinge bracket, see page 1.272

Cable ducting frame

RAL 7035 screw fixed

RAL 7021 screw fixed

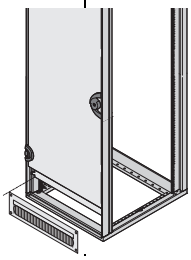

07011061

RAL 7021 clipped

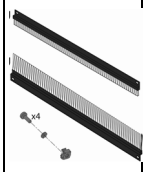

07016073

St, 2.5 mm, with black brush strip
1) Height 3 U 2) Height 4 U

No.	Cabinet dimensions Height U	Height mm	Width mm	Depth mm	RAL 7035 1 piece assembled	RAL 7021 1 piece assembled	33 mm 1 piece assembled	60 mm 1 piece assembled	60 mm 1 piece assembled	RAL 7035 1 piece assembled	RAL 7021 1 piece assembled	RAL 7021 1 piece assembled
1	6	357	553	500	–	–	–	–	–	–	–	–
2	6	357	553	600								
3	9	456	553	500	–	–	–	–	–	–	–	–
4	9	456	553	600								
5	12	589	553	500	–	–	–	–	–	–	–	–
6	12	589	553	600								
7	12	589	553	800								
8	12	589	553	900								
9	12	589	553	1000								
10	16	767	553	500	**26230-022**	25230-022	**27230-060**	**27230-061**	27230-098	1) **20118-391**	1) **20118-796**	1) 27230-160
11	16	767	553	600								
12	16	767	553	800								
13	16	767	553	900								
14	16	767	553	1000								
15	20	945	553	500	**26230-023**	25230-023	**27230-060**	**27230-061**	27230-098	1) **20118-391**	1) **20118-796**	1) 27230-160
16	20	945	553	600								
17	20	945	553	800								
18	20	945	553	900								
19	20	945	553	1000								
20	25	1167	553	500	**26230-024**	25230-024	**27230-060**	**27230-061**	27230-098	2) **20118-390**	2) **20118-797**	2) 27230-161
21	25	1167	553	600								
22	25	1167	553	800								
23	25	1167	553	900								
24	25	1167	553	1000								
25	34	1567	553	500	**26230-030**	25230-030	**27230-060**	**27230-061**	27230-098	2) **20118-390**	2) **20118-797**	2) 27230-161
26	34	1567	553	600								
27	34	1567	553	800								
28	34	1567	553	900								
29	34	1567	553	1000								
30	38	1745	553	500	**26230-026**	25230-026	**27230-060**	**27230-061**	27230-098	1) **20118-391**	1) **20118-796**	1) 27230-160
31	38	1745	553	600								
32	38	1745	553	800								
33	38	1745	553	900								
34	38	1745	553	1000								
35	43	1967	553	500	**26230-027**	25230-027	**27230-060**	**27230-061**	27230-098	2) **20118-390**	2) **20118-797**	2) 27230-161
36	43	1967	553	600								
37	43	1967	553	800								
38	43	1967	553	900								
39	43	1967	553	1000								
40	47	2145	553	500	26230-028	25230-028	**27230-060**	**27230-061**	27230-098	1) **20118-391**	1) **20118-796**	1) 27230-160
41	47	2145	553	600								
42	47	2145	553	800								
43	47	2145	553	900								
44	47	2145	553	1000								

Cabinets – Novastar Service Plus

Rear panels

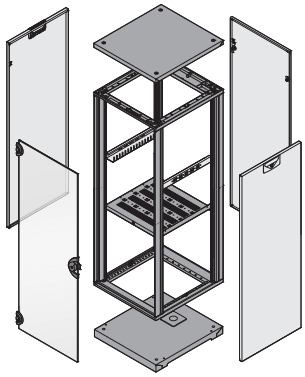

Rear panel

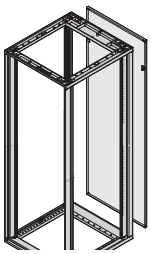

07011057 07011086

St, 1 mm; 2 twist-locking catches (Torx T30,with1/4 turn); incl. GND/earthing

Rear panel with cable ducting

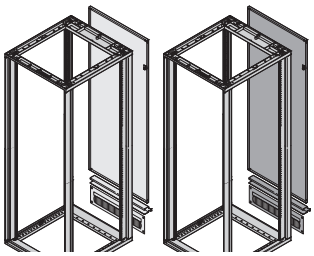

07011058 07011087

St, 1 mm; 2 twist-locking catches (Torx T30, with 1/4 turn), incl. GND/earthing, cable ducting and door hinge bracket; cable ducting can be fitted at top or bottom, 3 U cable ducting for cabinet height 16, 20, 38, 47 U; 4 U cable ducting for cabinet height 25, 34, 43 U

Rear panel lock

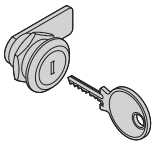

07011107

2 rear panel catches with lock (2233x locking), 2 keys; suitable for a rear panel

	Cabinet dimensions				RAL 7035	RAL 7021	RAL 7035	RAL 7021	
	Height		Width	Depth	1 piece	1 piece	PU 1 kit	PU 1 kit	PU 1 kit
No.	U	mm	mm	mm	assembled	assembled	assembled	assembled	assembled
1	6	357	553	500	**26230-370**	25230-370	–	–	27230-116
2	6	357	553	600					
3	9	456	553	500	**26230-371**	25230-371	–	–	27230-116
4	9	456	553	600					
5	12	589	553	500	**26230-372**	25230-372	–	–	27230-116
6	12	589	553	600					
7	12	589	553	800					
8	12	589	553	900					
9	12	589	553	1000					
10	16	767	553	500	**26230-373**	25230-373	**26230-430**	25230-430	27230-116
11	16	767	553	600					
12	16	767	553	800					
13	16	767	553	900					
14	16	767	553	1000					
15	20	945	553	500	**26230-374**	25230-374	**26230-434**	25230-434	27230-116
16	20	945	553	600					
17	20	945	553	800					
18	20	945	553	900					
19	20	945	553	1000					
20	25	1167	553	500	**26230-375**	25230-375	**26230-439**	25230-439	27230-116
21	25	1167	553	600					
22	25	1167	553	800					
23	25	1167	553	900					
24	25	1167	553	1000					
25	34	1567	553	500	**26230-376**	25230-376	**26230-448**	25230-448	27230-116
26	34	1567	553	600					
27	34	1567	553	800					
28	34	1567	553	900					
29	34	1567	553	1000					
30	38	1745	553	500	**26230-377**	25230-377	**26230-452**	25230-452	27230-116
31	38	1745	553	600					
32	38	1745	553	800					
33	38	1745	553	900					
34	38	1745	553	1000					
35	43	1967	553	500	**26230-378**	25230-378	**26230-457**	25230-457	27230-116
36	43	1967	553	600					
37	43	1967	553	800					
38	43	1967	553	900					
39	43	1967	553	1000					
40	47	2145	553	500	26230-379	25230-379	26230-461	25230-461	27230-116
41	47	2145	553	600					
42	47	2145	553	800					
43	47	2145	553	900					
44	47	2145	553	1000					

Cabinets – Novastar Service Plus

Top covers

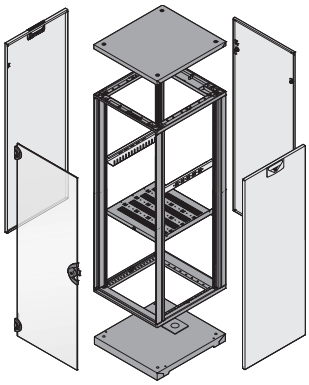

					Top cover flush		Top cover raised		Raised top cover, load-carrying capacity 50 kg
					Flush	Lifting eye	Raised	Lifting eye	
					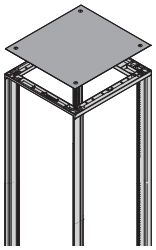 07011063	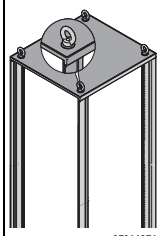 07011071	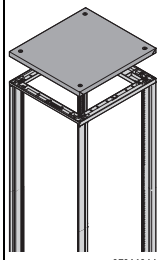 07011064	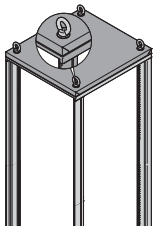 07011072	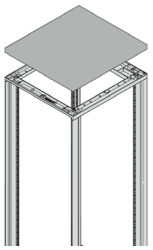 07016077
					St, 1 mm, RAL 7021, incl. GND/ earthing	for flush cover; M12, application and load to DIN 582	St, 1 mm, RAL 7021, incl. GND/ earthing, height 31 mm, air gap 10 mm	for raised cover or fan top cover; M12, application and load to DIN 582	St, 1 mm, RAL 7021, incl. GND/ earthing, height 31 mm, air gap 10 mm, roof mounting from the inside (outside no screws)
	Cabinet dimensions								
	Height		Width	Depth	1 piece	PU 4 pieces	1 piece	PU 4 pieces	1 piece
No.	U	mm	mm	mm	assembled	assembled	assembled	assembled	assembled
1	6	357	553	500	25230-001	27230-066	25230-010	27230-065	25230-039
2	6	357	553	600	25230-002		25230-011		25230-038
3	9	456	553	500	25230-001	27230-066	25230-010	27230-065	25230-039
4	9	456	553	600	25230-002		25230-011		25230-038
5	12	589	553	500	25230-001	27230-066	25230-010	27230-065	25230-039
6	12	589	553	600	25230-002		25230-011		25230-038
7	12	589	553	800	25230-003		25230-012		25230-037
8	12	589	553	900	25230-043		25230-045		25230-141
9	12	589	553	1000	25230-044		25230-046		25230-142
10	16	767	553	500	25230-001	27230-066	25230-010	27230-065	25230-039
11	16	767	553	600	25230-002		25230-011		25230-038
12	16	767	553	800	25230-003		25230-012		25230-037
13	16	767	553	900	25230-043		25230-045		25230-141
14	16	767	553	1000	25230-044		25230-046		25230-142
15	20	945	553	500	25230-001	27230-066	25230-010	27230-065	25230-039
16	20	945	553	600	25230-002		25230-011		25230-038
17	20	945	553	800	25230-003		25230-012		25230-037
18	20	945	553	900	25230-043		25230-045		25230-141
19	20	945	553	1000	25230-044		25230-046		25230-142
20	25	1167	553	500	25230-001	27230-066	25230-010	27230-065	25230-039
21	25	1167	553	600	25230-002		25230-011		25230-038
22	25	1167	553	800	25230-003		25230-012		25230-037
23	25	1167	553	900	25230-043		25230-045		25230-141
24	25	1167	553	1000	25230-044		25230-046		25230-142
25	34	1567	553	500	25230-001	27230-066	25230-010	27230-065	25230-039
26	34	1567	553	600	25230-002		25230-011		25230-038
27	34	1567	553	800	25230-003		25230-012		25230-037
28	34	1567	553	900	25230-043		25230-045		25230-141
29	34	1567	553	1000	25230-044		25230-046		25230-142
30	38	1745	553	500	25230-001	27230-066	25230-010	27230-065	25230-039
31	38	1745	553	600	25230-002		25230-011		25230-038
32	38	1745	553	800	25230-003		25230-012		25230-037
33	38	1745	553	900	25230-043		25230-045		25230-141
34	38	1745	553	1000	25230-044		25230-046		25230-142
35	43	1967	553	500	25230-001	27230-066	25230-010	27230-065	25230-039
36	43	1967	553	600	25230-002		25230-011		25230-038
37	43	1967	553	800	25230-003		25230-012		25230-037
38	43	1967	553	900	25230-043		25230-045		25230-141
39	43	1967	553	1000	25230-044		25230-046		25230-142
40	47	2145	553	500	25230-001	27230-066	25230-010	27230-065	25230-039
41	47	2145	553	600	25230-002		25230-011		25230-038
42	47	2145	553	800	25230-003		25230-012		25230-037
43	47	2145	553	900	25230-043		25230-045		25230-141
44	47	2145	553	1000	25230-044		25230-046		25230-142

Cabinets – Novastar Service Plus

Fan top covers, lifting eye, thermostat, speed controller

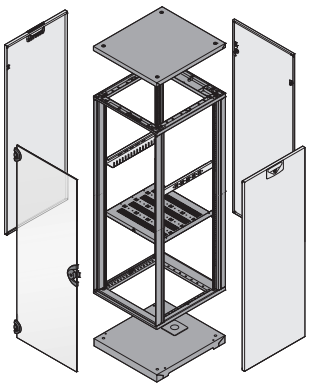

	Cabinet dimensions				Fan top cover (fan height 25 mm)		Fan top cover (fan height 38 mm)		Lifting eye	Thermostat	Speed control
					Fan top cover with fans	Fan 84 ... 90 m³	Fan top cover with fans	Fan 162 ... 172 m³			
					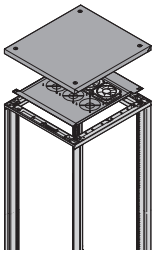	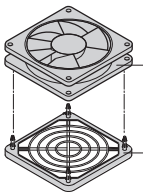	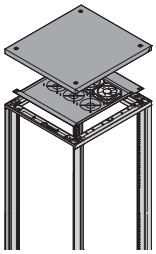	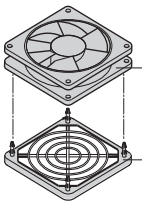	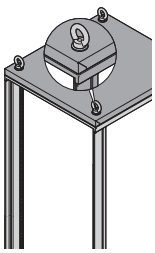	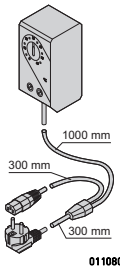	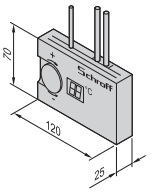
					07011082	kta44844	07011082	kta44844	07011072	01108052	01105055
					St, RAL 7021, incl. GND/earthing and cabling; 2 fans for 500 mm depth, 4 cover caps; 3 fans for 600/800 mm depth, 3 cover caps; 0.5 m connector cable, IEC C14 plug	axial fan with protective grille, 230 V_{AC}, 8 W, 84 ... 90 m³/h 29 ... 30 dB(A), height 25 mm; please order separately if additional fans are required	St, RAL 7021, incl. GND/earthing and cabling; 2 fans for 500 mm depth, 1 cover cap3 fans for 600/800 mm depth, 3 cover caps; 0.5 m connector cable, IEC C14 plug	axial fan with protective grille, 230 V_{AC}, 15 W, 162 ... 172 m³/h, 37 ... 41 dB(A), height 38 mm; please order separately if additional fans are required	for raised cover or fan top cover; M12, application and load to DIN 582	with mains cable 230 V_{AC} (SCHUKO/UTE plug/IEC 60320 C13 socket), adjustment range 0 ... 60°C	fully wired, 90 ... 264 V_{AC}, input SCHUKO/UTE plug, outlet IEC 60320 C13 socket; external NTC sensor 1.5 m
No.	Height U	Height mm	Width mm	Depth mm	PU 1 kit assembled	1 piece assembled	PU 1 kit assembled	1 piece assembled	PU 4 pieces assembled	1 piece assembled	1 piece assembled
1	6	357	553	500	27230-081	27230-077	27230-085	27230-078	**27230-065**	**20118-750**	**60715-005**
2	6	357	553	600	27230-082		27230-086				
3	9	456	553	500	27230-081	27230-077	27230-085	27230-078	**27230-065**	**20118-750**	**60715-005**
4	9	456	553	600	27230-082		27230-086				
5	12	589	553	500	27230-081	27230-077	27230-085	27230-078	**27230-065**	**20118-750**	**60715-005**
6	12	589	553	600	27230-082		27230-086				
7	12	589	553	800	27230-083		27230-087				
8	12	589	553	900	27230-094		27230-096				
9	12	589	553	1000	27230-095		27230-097				
10	16	767	553	500	27230-081	27230-077	27230-085	27230-078	**27230-065**	**20118-750**	**60715-005**
11	16	767	553	600	27230-082		27230-086				
12	16	767	553	800	27230-083		27230-087				
13	16	767	553	900	27230-094		27230-096				
14	16	767	553	1000	27230-095		27230-097				
15	20	945	553	500	27230-081	27230-077	27230-085	27230-078	**27230-065**	**20118-750**	**60715-005**
16	20	945	553	600	27230-082		27230-086				
17	20	945	553	800	27230-083		27230-087				
18	20	945	553	900	27230-094		27230-096				
19	20	945	553	1000	27230-095		27230-097				
20	25	1167	553	500	27230-081	27230-077	27230-085	27230-078	**27230-065**	**20118-750**	**60715-005**
21	25	1167	553	600	27230-082		27230-086				
22	25	1167	553	800	27230-083		27230-087				
23	25	1167	553	900	27230-094		27230-096				
24	25	1167	553	1000	27230-095		27230-097				
25	34	1567	553	500	27230-081	27230-077	27230-085	27230-078	**27230-065**	**20118-750**	**60715-005**
26	34	1567	553	600	27230-082		27230-086				
27	34	1567	553	800	27230-083		27230-087				
28	34	1567	553	900	27230-094		27230-096				
29	34	1567	553	1000	27230-095		27230-097				
30	38	1745	553	500	27230-081	27230-077	27230-085	27230-078	**27230-065**	**20118-750**	**60715-005**
31	38	1745	553	600	27230-082		27230-086				
32	38	1745	553	800	27230-083		27230-087				
33	38	1745	553	900	27230-094		27230-096				
34	38	1745	553	1000	27230-095		27230-097				
35	43	1967	553	500	27230-081	27230-077	27230-085	27230-078	**27230-065**	**20118-750**	**60715-005**
36	43	1967	553	600	27230-082		27230-086				
37	43	1967	553	800	27230-083		27230-087				
38	43	1967	553	900	27230-094		27230-096				
39	43	1967	553	1000	27230-095		27230-097				
40	47	2145	553	500	27230-081	27230-077	27230-085	27230-078	**27230-065**	**20118-750**	**60715-005**
41	47	2145	553	600	27230-082		27230-086				
42	47	2145	553	800	27230-083		27230-087				
43	47	2145	553	900	27230-094		27230-096				
44	47	2145	553	1000	27230-095		27230-097				

Cabinets – Novastar Service Plus

Floors

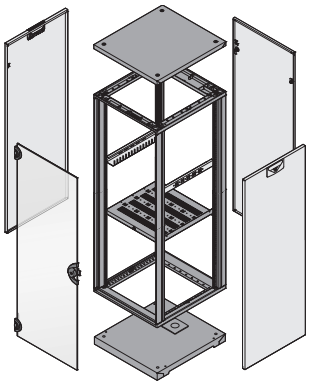

	Cabinet dimensions				Base plates					Base plate, reinforced, with cable ducting	
					Base plate, rear open	Cover plate	Cover plate Perforated	Cover plate Filter mat	Brush strip	Base plate	Brush strip
					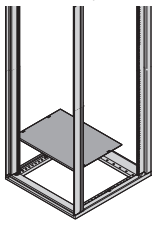	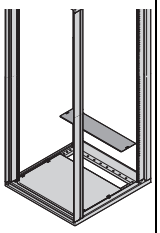	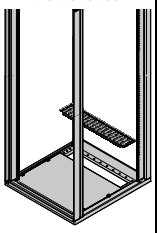	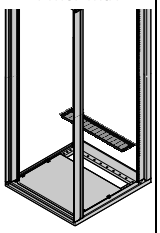	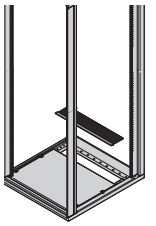	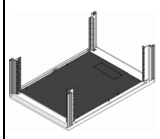	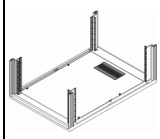
					07011073 St, 1.5 mm, RAL 7021, incl. GND/ earthing; cable ducting in rear area of cabinet; please order cover or brush strip separately	07011073 St, 1.5 mm, 485 x 92 mm; to cover the rear floor opening	07016052 St, 1.5 mm, 485 x 92 mm; to cover the rear floor opening	07016052 St, 1 mm, 485 x 92 mm; to cover the rear floor opening	07011073 Nylon, black, 440 x 98 mm; to cover the rear floor opening	07016059 St, 1.5 mm, RAL 7021; fully closed with pre-cut area for cable ducting opening, width 370 mm, depth 50 mm	07016060 Nylon, black, width 370 mm, depth 50 mm; for covering the rear floor opening
	Height		Width	Depth							
No.	U	mm	mm	mm	1 piece assembled	1 piece assembled	1 piece assembled	1 piece assembled	1 piece assembled	1 piece assembled	1 piece montiert
1	6	357	553	500	27230-188	27230-114	27230-254	27230-255	27230-079	25230-149	27230-055
2	6	357	553	600	27230-189					25230-150	
3	9	456	553	500	27230-188	27230-114	27230-254	27230-255	27230-079	25230-149	27230-055
4	9	456	553	600	27230-189					25230-150	
5	12	589	553	500	27230-188	27230-114	27230-254	27230-255	27230-079	25230-149	27230-055
6	12	589	553	600	27230-189					25230-150	
7	12	589	553	800	27230-190					25230-151	
8	12	589	553	900	27230-191					25230-152	
9	12	589	553	1000	27230-192					25230-153	
10	16	767	553	500	27230-188	27230-114	27230-254	27230-255	27230-079	25230-149	27230-055
11	16	767	553	600	27230-189					25230-150	
12	16	767	553	800	27230-190					25230-151	
13	16	767	553	900	27230-191					25230-152	
14	16	767	553	1000	27230-192					25230-153	
15	20	945	553	500	27230-188	27230-114	27230-254	27230-255	27230-079	25230-149	27230-055
16	20	945	553	600	27230-189					25230-150	
17	20	945	553	800	27230-190					25230-151	
18	20	945	553	900	27230-191					25230-152	
19	20	945	553	1000	27230-192					25230-153	
20	25	1167	553	500	27230-188	27230-114	27230-254	27230-255	27230-079	25230-149	27230-055
21	25	1167	553	600	27230-189					25230-150	
22	25	1167	553	800	27230-190					25230-151	
23	25	1167	553	900	27230-191					25230-152	
24	25	1167	553	1000	27230-192					25230-153	
25	34	1567	553	500	27230-188	27230-114	27230-254	27230-255	27230-079	25230-149	27230-055
26	34	1567	553	600	27230-189					25230-150	
27	34	1567	553	800	27230-190					25230-151	
28	34	1567	553	900	27230-191					25230-152	
29	34	1567	553	1000	27230-192					25230-153	
30	38	1745	553	500	27230-188	27230-114	27230-254	27230-255	27230-079	25230-149	27230-055
31	38	1745	553	600	27230-189					25230-150	
32	38	1745	553	800	27230-190					25230-151	
33	38	1745	553	900	27230-191					25230-152	
34	38	1745	553	1000	27230-192					25230-153	
35	43	1967	553	500	27230-188	27230-114	27230-254	27230-255	27230-079	25230-149	27230-055
36	43	1967	553	600	27230-189					25230-150	
37	43	1967	553	800	27230-190					25230-151	
38	43	1967	553	900	27230-191					25230-152	
39	43	1967	553	1000	27230-192					25230-153	
40	47	2145	553	500	27230-188	27230-114	27230-254	27230-255	27230-079	25230-149	27230-055
41	47	2145	553	600	27230-189					25230-150	
42	47	2145	553	800	27230-190					25230-151	
43	47	2145	553	900	27230-191					25230-152	
44	47	2145	553	1000	27230-192					25230-153	

Cabinets – Novastar Service Plus

Base/plinth

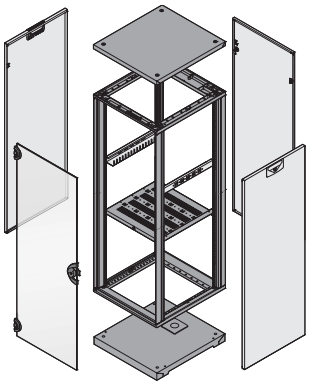

					Bases/plinths		Mobile bases/ plinths
					With cable ducting	Brush strip	
					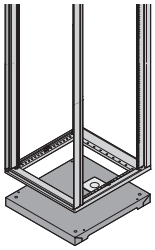 07011075 St, 1.5 mm, RAL 7021, height 55 mm; incl. GND/ earthing; cable ducting 110 x 76 mm; adjustable feet, adjustable height range 57 mm ... 67 mm	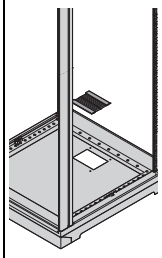 07011077 Nylon, black, 110 mm x 76 mm; to cover cable through-ducting opening	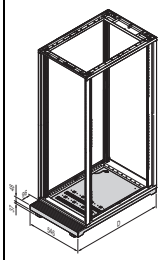 07011113 St, 2 mm, fine-grooved mat, 3 mm, 4 castors, load-carrying capacity 200 kg
	Cabinet dimensions						
	Height		Width	Depth	1 piece	1 piece	1 piece
No.	U	mm	mm	mm	assembled	assembled	assembled
1	6	357	553	500	**27230-070**	**27230-111**	**27230-146**
2	6	357	553	600	**27230-071**		**27230-147**
3	9	456	553	500	**27230-070**	**27230-111**	**27230-146**
4	9	456	553	600	**27230-071**		**27230-147**
5	12	589	553	500	**27230-070**	**27230-111**	**27230-146**
6	12	589	553	600	**27230-071**		**27230-147**
7	12	589	553	800	**27230-072**		**27230-148**
8	12	589	553	900	27230-076		–
9	12	589	553	1000	27230-080		–
10	16	767	553	500	**27230-070**	**27230-111**	**27230-146**
11	16	767	553	600	**27230-071**		**27230-147**
12	16	767	553	800	**27230-072**		**27230-148**
13	16	767	553	900	27230-076		–
14	16	767	553	1000	27230-080		–
15	20	945	553	500	**27230-070**	**27230-111**	**27230-146**
16	20	945	553	600	**27230-071**		**27230-147**
17	20	945	553	800	**27230-072**		**27230-148**
18	20	945	553	900	27230-076		–
19	20	945	553	1000	27230-080		–
20	25	1167	553	500	**27230-070**	**27230-111**	**27230-146**
21	25	1167	553	600	**27230-071**		**27230-147**
22	25	1167	553	800	**27230-072**		**27230-148**
23	25	1167	553	900	27230-076		–
24	25	1167	553	1000	27230-080		–
25	34	1567	553	500	**27230-070**	**27230-111**	**27230-146**
26	34	1567	553	600	**27230-071**		**27230-147**
27	34	1567	553	800	**27230-072**		**27230-148**
28	34	1567	553	900	27230-076		–
29	34	1567	553	1000	27230-080		–
30	38	1745	553	500	**27230-070**	**27230-111**	**27230-146**
31	38	1745	553	600	**27230-071**		**27230-147**
32	38	1745	553	800	**27230-072**		**27230-148**
33	38	1745	553	900	27230-076		–
34	38	1745	553	1000	27230-080		–
35	43	1967	553	500	**27230-070**	**27230-111**	**27230-146**
36	43	1967	553	600	**27230-071**		**27230-147**
37	43	1967	553	800	**27230-072**		**27230-148**
38	43	1967	553	900	27230-076		–
39	43	1967	553	1000	27230-080		–
40	47	2145	553	500	**27230-070**	**27230-111**	**27230-146**
41	47	2145	553	600	**27230-071**		**27230-147**
42	47	2145	553	800	**27230-072**		**27230-148**
43	47	2145	553	900	27230-076		–
44	47	2145	553	1000	27230-080		–

Cabinets – Novastar Service Plus

19" panel/slide mounts, depth members, shelves

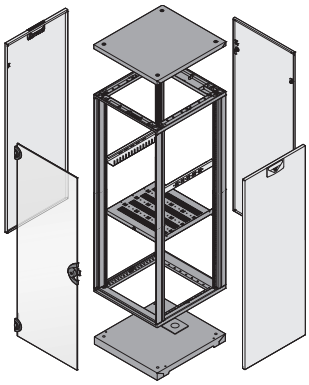

					Depth members	19" panel/slide mounts	19" plane for universal upright	
							3 U	4 U
					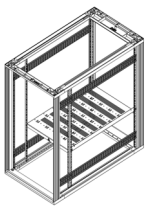 07011114 St, 1.5 mm, finish AlZn; for mounting 19" pitch profiles	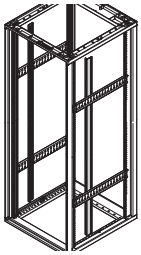 07011111 19" panel/slide mounts with universal perforation grid (EIA)	07016070 St, 2 mm, RAL 7021	07011114
	Cabinet dimensions							
	Height		Width	Depth	PU 2 pieces	PU 2 pieces	PU 2 pieces	PU 2 pieces
No.	U	mm	mm	mm	assembled	assembled	assembled	assembled
1	6	357	553	500	27230-167	27230-172	27230-162	27230-163
2	6	357	553	600	27230-168			
3	9	456	553	500	27230-167	27230-173	27230-162	27230-163
4	9	456	553	600	27230-168			
5	12	589	553	500	27230-167	27230-174	27230-162	27230-163
6	12	589	553	600	27230-168			
7	12	589	553	800	27230-169			
8	12	589	553	900	27230-170			
9	12	589	553	1000	27230-171			
10	16	767	553	500	27230-167	27230-175	27230-162	27230-163
11	16	767	553	600	27230-168			
12	16	767	553	800	27230-169			
13	16	767	553	900	27230-170			
14	16	767	553	1000	27230-171			
15	20	945	553	500	27230-167	27230-176	27230-162	27230-163
16	20	945	553	600	27230-168			
17	20	945	553	800	27230-169			
18	20	945	553	900	27230-170			
19	20	945	553	1000	27230-171			
20	25	1167	553	500	27230-167	27230-177	27230-162	27230-163
21	25	1167	553	600	27230-168			
22	25	1167	553	800	27230-169			
23	25	1167	553	900	27230-170			
24	25	1167	553	1000	27230-171			
25	34	1567	553	500	27230-167	27230-178	27230-162	27230-163
26	34	1567	553	600	27230-168			
27	34	1567	553	800	27230-169			
28	34	1567	553	900	27230-170			
29	34	1567	553	1000	27230-171			
30	38	1745	553	500	27230-167	27230-179	27230-162	27230-163
31	38	1745	553	600	27230-168			
32	38	1745	553	800	27230-169			
33	38	1745	553	900	27230-170			
34	38	1745	553	1000	27230-171			
35	43	1967	553	500	27230-167	27230-180	27230-162	27230-163
36	43	1967	553	600	27230-168			
37	43	1967	553	800	27230-169			
38	43	1967	553	900	27230-170			
39	43	1967	553	1000	27230-171			
40	47	2145	553	500	27230-167	27230-181	27230-162	27230-163
41	47	2145	553	600	27230-168			
42	47	2145	553	800	27230-169			
43	47	2145	553	900	27230-170			
44	47	2145	553	1000	27230-171			

Cabinets – Novastar Service Plus

Shelves

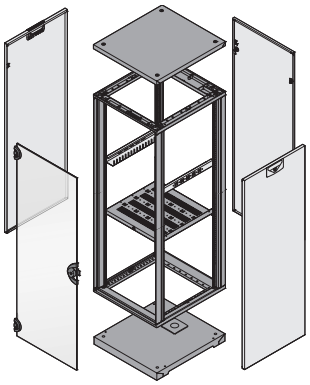

					Stationary shelf	Shelf, stationary for server	Telescopic shelf, 2 U, 70 kg			
							Full depth	Shortened by 100 mm	T-bar lock	GND/earthing
					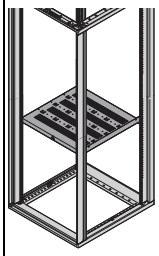 07011077	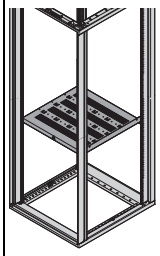 07011077	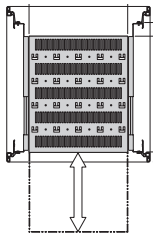 07011101	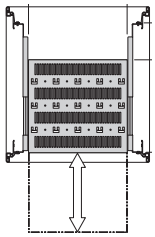 07011102	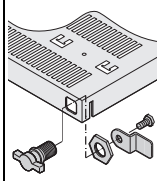 01004125	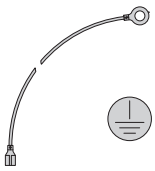 aza43284
					St, 1.5 mm, RAL 7021, with perforation, static load-carrying capacity 75 kg	St, 1.5 mm, RAL 7021, with perforation, static load-carrying capacity 75 kg	St, 1.5 mm, RAL 7021, static load-carrying capacity when fully extended 70 kg, incl. telescopic slide; please order T-bar lock and GND/ earthing kit separately		to lock the telescopic shelf	for telescopic shelf
	Cabinet dimensions									
	Height		Width	Depth						
No.	U	mm	mm	mm	1 piece assembled	1 piece assembled	1 piece assembled	1 piece assembled	1 piece assembled	PU 1 kit assembled
1	6	357	553	500	**27230-051**	–	**21130-357**	21130-358	**23130-092**	**21120-189**
2	6	357	553	600	**27230-052**	–	**21130-353**	**21130-352**		
3	9	456	553	500	**27230-051**	–	**21130-357**	21130-358	**23130-092**	**21120-189**
4	9	456	553	600	**27230-052**	–	**21130-353**	**21130-352**		
5	12	589	553	500	**27230-051**	–	**21130-357**	21130-358	**23130-092**	**21120-189**
6	12	589	553	600	**27230-052**	–	**21130-353**	**21130-352**		
7	12	589	553	800	**27230-053**	–	**21130-355**	**21130-354**		
8	12	589	553	900	27230-088	27230-165	27230-108	–		
9	12	589	553	1000	27230-089	27230-165	27230-109	–		
10	16	767	553	500	**27230-051**	–	**21130-357**	21130-358	**23130-092**	**21120-189**
11	16	767	553	600	**27230-052**	–	**21130-353**	**21130-352**		
12	16	767	553	800	**27230-053**	–	**21130-355**	**21130-354**		
13	16	767	553	900	27230-088	27230-165	27230-108	–		
14	16	767	553	1000	27230-089	27230-165	27230-109	–		
15	20	945	553	500	**27230-051**	–	**21130-357**	21130-358	**23130-092**	**21120-189**
16	20	945	553	600	**27230-052**	–	**21130-353**	**21130-352**		
17	20	945	553	800	**27230-053**	–	**21130-355**	**21130-354**		
18	20	945	553	900	27230-088	27230-165	27230-108	–		
19	20	945	553	1000	27230-089	27230-165	27230-109	–		
20	25	1167	553	500	**27230-051**	–	**21130-357**	21130-358	**23130-092**	**21120-189**
21	25	1167	553	600	**27230-052**	–	**21130-353**	**21130-352**		
22	25	1167	553	800	**27230-053**	–	**21130-355**	**21130-354**		
23	25	1167	553	900	27230-088	27230-165	27230-108	–		
24	25	1167	553	1000	27230-089	27230-165	27230-109	–		
25	34	1567	553	500	**27230-051**	–	**21130-357**	21130-358	**23130-092**	**21120-189**
26	34	1567	553	600	**27230-052**	–	**21130-353**	**21130-352**		
27	34	1567	553	800	**27230-053**	–	**21130-355**	**21130-354**		
28	34	1567	553	900	27230-088	27230-165	27230-108	–		
29	34	1567	553	1000	27230-089	27230-165	27230-109	–		
30	38	1745	553	500	**27230-051**	–	**21130-357**	21130-358	**23130-092**	**21120-189**
31	38	1745	553	600	**27230-052**	–	**21130-353**	**21130-352**		
32	38	1745	553	800	**27230-053**	–	**21130-355**	**21130-354**		
33	38	1745	553	900	27230-088	27230-165	27230-108	–		
34	38	1745	553	1000	27230-089	27230-165	27230-109	–		
35	43	1967	553	500	**27230-051**	–	**21130-357**	21130-358	**23130-092**	**21120-189**
36	43	1967	553	600	**27230-052**	–	**21130-353**	**21130-352**		
37	43	1967	553	800	**27230-053**	–	**21130-355**	**21130-354**		
38	43	1967	553	900	27230-088	27230-165	27230-108	–		
39	43	1967	553	1000	27230-089	27230-165	27230-109	–		
40	47	2145	553	500	**27230-051**	–	**21130-357**	21130-358	**23130-092**	**21120-189**
41	47	2145	553	600	**27230-052**	–	**21130-353**	**21130-352**		
42	47	2145	553	800	**27230-053**	–	**21130-355**	**21130-354**		
43	47	2145	553	900	27230-088	27230-165	27230-108	–		
44	47	2145	553	1000	27230-089	27230-165	27230-109	–		

Cabinets – Novastar Service Plus

Slide rails

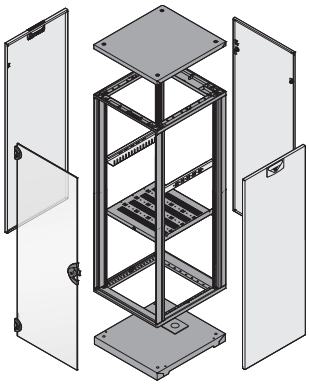

					Slide rail				
					Slide rail	Heavy-load slide rail	Heavy-load slide rail for server	Short slide rail	
					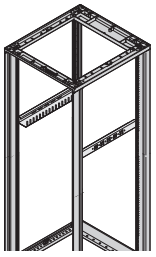 07011078	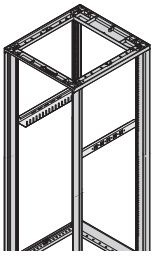 07011078	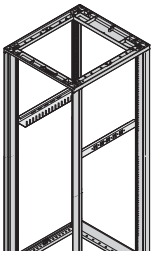 07011078	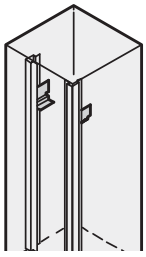 ERA46348	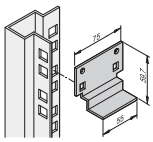 sc96xxxx
					St, 1.5 mm, finish AlZn, static load-carrying capacity 25 kg/pair	St, 1.5 mm, finish AlZn, static load-carrying capacity 50 kg/pair		St, 1.5 mm, finish AlZn, static load-carrying capacity 15 kg/pair	
	Cabinet dimensions								
No.	Height U	Height mm	Width mm	Depth mm	PU 2 pieces assembled	PU 2 pieces assembled	PU 2 pieces assembled	PU 2 pieces enclosed loose	PU 10 pieces enclosed loose
1	6	357	553	500	**27230-102**	25230-013	–	27230-184	27230-185
2	6	357	553	600	**27230-103**	25230-014	–		
3	9	456	553	500	**27230-102**	25230-013	–	27230-184	27230-185
4	9	456	553	600	**27230-103**	25230-014	–		
5	12	589	553	500	**27230-102**	25230-013	–	27230-184	27230-185
6	12	589	553	600	**27230-103**	25230-014	–		
7	12	589	553	800	**27230-104**	25230-015	–		
8	12	589	553	900	27230-105	25230-145	25230-148		
9	12	589	553	1000	27230-106	25230-146	25230-148		
10	16	767	553	500	**27230-102**	25230-013	–	27230-184	27230-185
11	16	767	553	600	**27230-103**	25230-014	–		
12	16	767	553	800	**27230-104**	25230-015	–		
13	16	767	553	900	27230-105	25230-145	25230-148		
14	16	767	553	1000	27230-106	25230-146	25230-148		
15	20	945	553	500	**27230-102**	25230-013	–	27230-184	27230-185
16	20	945	553	600	**27230-103**	25230-014	–		
17	20	945	553	800	**27230-104**	25230-015	–		
18	20	945	553	900	27230-105	25230-145	25230-148		
19	20	945	553	1000	27230-106	25230-146	25230-148		
20	25	1167	553	500	**27230-102**	25230-013	–	27230-184	27230-185
21	25	1167	553	600	**27230-103**	25230-014	–		
22	25	1167	553	800	**27230-104**	25230-015	–		
23	25	1167	553	900	27230-105	25230-145	25230-148		
24	25	1167	553	1000	27230-106	25230-146	25230-148		
25	34	1567	553	500	**27230-102**	25230-013	–	27230-184	27230-185
26	34	1567	553	600	**27230-103**	25230-014	–		
27	34	1567	553	800	**27230-104**	25230-015	–		
28	34	1567	553	900	27230-105	25230-145	25230-148		
29	34	1567	553	1000	27230-106	25230-146	25230-148		
30	38	1745	553	500	**27230-102**	25230-013	–	27230-184	27230-185
31	38	1745	553	600	**27230-103**	25230-014	–		
32	38	1745	553	800	**27230-104**	25230-015	–		
33	38	1745	553	900	27230-105	25230-145	25230-148		
34	38	1745	553	1000	27230-106	25230-146	25230-148		
35	43	1967	553	500	**27230-102**	25230-013	–	27230-184	27230-185
36	43	1967	553	600	**27230-103**	25230-014	–		
37	43	1967	553	800	**27230-104**	25230-015	–		
38	43	1967	553	900	27230-105	25230-145	25230-148		
39	43	1967	553	1000	27230-106	25230-146	25230-148		
40	47	2145	553	500	**27230-102**	25230-013	–	27230-184	27230-185
41	47	2145	553	600	**27230-103**	25230-014	–		
42	47	2145	553	800	**27230-104**	25230-015	–		
43	47	2145	553	900	27230-105	25230-145	25230-148		
44	47	2145	553	1000	27230-106	25230-146	25230-148		

Cabinets – Novastar Service Plus

Cable ties, Velcro-type tape

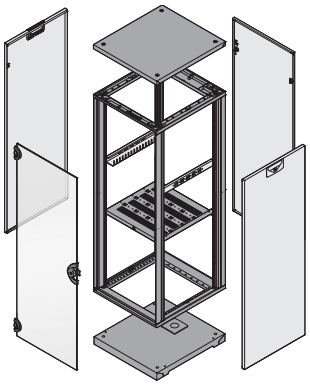

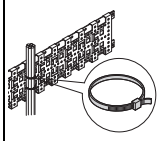

Cable tie

01005078

plastic,
92 mm x 2.5 mm;

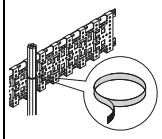

Velcro

01005079

black,
length 300 mm,

No.	Cabinet dimensions Height U	Height mm	Width mm	Depth mm	PU 25 pieces supplied loose	PU 10 pieces supplied loose
1	6	357	553	500	20118-351	20118-624
2	6	357	553	600		
3	9	456	553	500	20118-351	20118-624
4	9	456	553	600		
5	12	589	553	500	20118-351	20118-624
6	12	589	553	600		
7	12	589	553	800		
8	12	589	553	900		
9	12	589	553	1000		
10	16	767	553	500	20118-351	20118-624
11	16	767	553	600		
12	16	767	553	800		
13	16	767	553	900		
14	16	767	553	1000		
15	20	945	553	500	20118-351	20118-624
16	20	945	553	600		
17	20	945	553	800		
18	20	945	553	900		
19	20	945	553	1000		
20	25	1167	553	500	20118-351	20118-624
21	25	1167	553	600		
22	25	1167	553	800		
23	25	1167	553	900		
24	25	1167	553	1000		
25	34	1567	553	500	20118-351	20118-624
26	34	1567	553	600		
27	34	1567	553	800		
28	34	1567	553	900		
29	34	1567	553	1000		
30	38	1745	553	500	20118-351	20118-624
31	38	1745	553	600		
32	38	1745	553	800		
33	38	1745	553	900		
34	38	1745	553	1000		
35	43	1967	553	500	20118-351	20118-624
36	43	1967	553	600		
37	43	1967	553	800		
38	43	1967	553	900		
39	43	1967	553	1000		
40	47	2145	553	500	20118-351	20118-624
41	47	2145	553	600		
42	47	2145	553	800		
43	47	2145	553	900		
44	47	2145	553	1000		

General components

Mechanics

from page 3.2

Electrics

from page 3.30

Power distribution

from page 3.35

Climate control

from page 4.0

Content

Cabinets 1

Wall mounted cases 2

Accessories for cabinets and wall mounted cases . 3

Climate control . 4

Electronics cases 5

Subracks/ 19" chassis 6

Front panels, plug-in units . . . 7

Systems 8

Power supply units 9

Backplanes . . . 10

Connectors, front panel component system 11

Appendix 12

Cabinets – *eurorack*

00105003

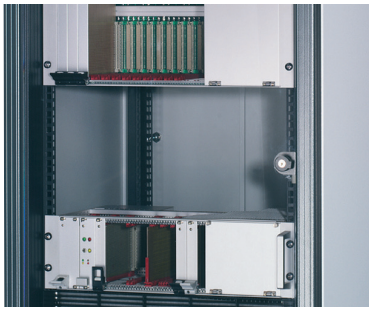

00105004

19" grid integrated in upright

00105005

Simple solution for shortened doors

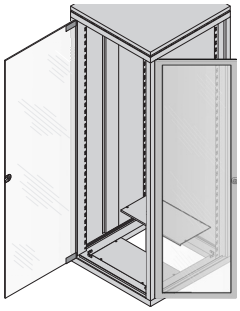

00105066

Doors can also be assembled laterally

Standards/certifications

- External and internal dimensions in accordance with IEC 60297-3-100
- Type of ingress protection: IP 40, in accordance with IEC 60529
- Protective GND/earthing connections in accordance with DIN EN 50178/VDE 0160

Overview 1.270

19" electronic cabinet

- Type of ingress protection up to IP 40
- Bolted frame, die-castings and aluminium profiles, with inset covers
- Static load-carrying capacity 400 kg
- New colours: RAL 7021 (black grey) or RAL 7021/RAL 7035 (black grey/light grey) colour combination

Introduction 1.272
Dimensions 1.274

Cabinet with front and rear door

00108002

- 38 and 43 U
- Depth 600 and 800 mm

Cabinet without front and rear door

00108004

- 34, 38, 43 and 47 U
- Depth 600 and 800 mm

eurorack
19" cabinets with front and rear door 1.276
19" cabinets without front and rear door 1.277
Front/ rear doors 1.278
Door hinge bracket for shortened doors 1.279
Base plates 1.280
Bases/plinths 1.280
Cable ducting with C-profiles 1.282
Cable eyes for C-profile 1.283
Slide rails 1.284
Cable ties 1.283
Fixed/telescopic shelves 1.285
Cable trays 1.287
Cable ties 1.287
Velcro 1.287

30407004

ServicePLUS from page 1.288

e.g. individual configuration and assembly
e.g. modifications (special colours or sizes)
e.g. variants of uprights
e.g. custom solutions (electromagnetically shielded applications)

www.schroff.biz/ServicePLUS

ServicePLUS 1.288
ServicePLUS configuration 19" eurorack 1.289
ServicePLUS configuration Universal eurorack 1.300

Cabinets – *eurorack*

eurorack - the "classic"

00108005

Handsome to behold is this classic among electronics cabinets, and with good reason. Its load-bearing frame consists of a die-cast aluminium frame and aluminium uprights whose fluting gives the impression of classical pillars. Thus in eurorack - and also in NOVASTAR - the cladding parts are not fitted externally on the frame but rather inside between the frame and uprights. Thus they remain visible and give the cabinet its unmistakable look.

The cabinet is available in two colour schemes.
The basic frame and top cover are always in black grey (RAL 7021). With black grey claddings (side panels, doors and rear panels) you get an entirely black cabinet, as it is the contemporary look in recording studios and data centres. Alternatively, select the cladding components in light grey (RAL 7035). The different colours of the frame and lateral parts give particular emphasis to the aluminium profile.
Wholly classical yet timelessly modern!

Cabinets – eurorack

eurorack - frames

19" frame

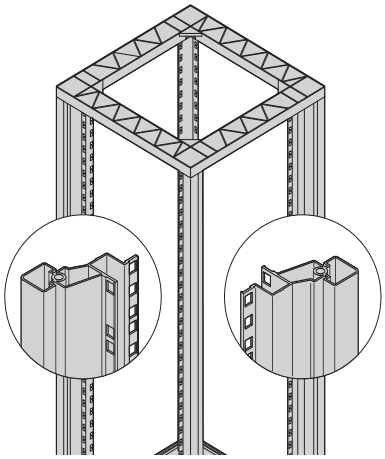

00108058

Unlike with other cabinet concepts, where the height of a cabinet is determined by common mm intervals in its exterior dimen-sions, eurorack is systematically oriented along the interior dimensions, using the height units of the 19" system. 19" components are thus flush in height with the frame and without disruptive gaps.
So that likewise no gaps occur in the width there is the 19" frame, with the 19" plane already integrated in the vertical cabinet uprights. When fully equipped with 19" components, the cabinet therefore looks superb without any cover trims, decorative frames or doors.
Nevertheless, if a door is required, the eurorack glazed door is a clear design option, with 60 mm space in front of the 19" mounting for assembly.

Universal frame

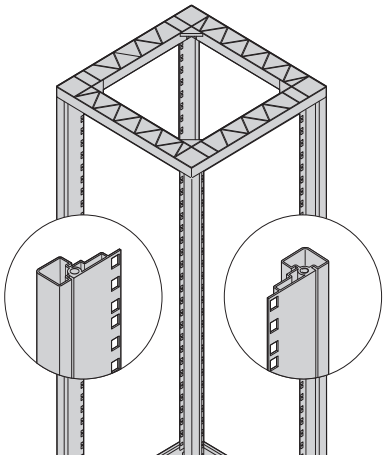

01008059

If more space is required in front of the 19" plane, the user can fall back on the Universal frame and fit separate 19" panel/slide mounts. These can then be positioned at 25 mm intervals on the depth members.
However, 800 mm wide cabinets can also be realised using the Universal frame. For example, equipped with shelves for the greatest possible surface or with components that require more flexibility than 19" technology.

Further features

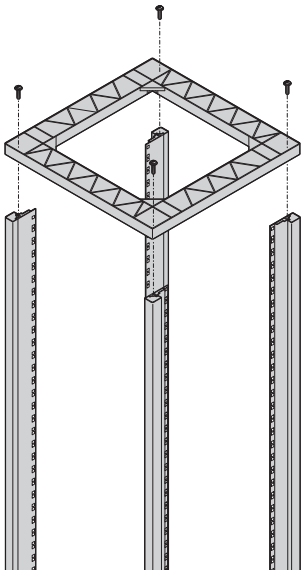

00108060

Die-cast frame and frame are bolted; the cabinet can thus be dismantled

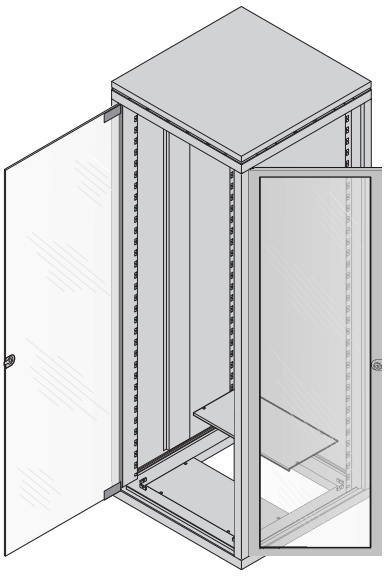

00105066

Because of their symmetrical upright dimensions, doors can also be used on the sides.

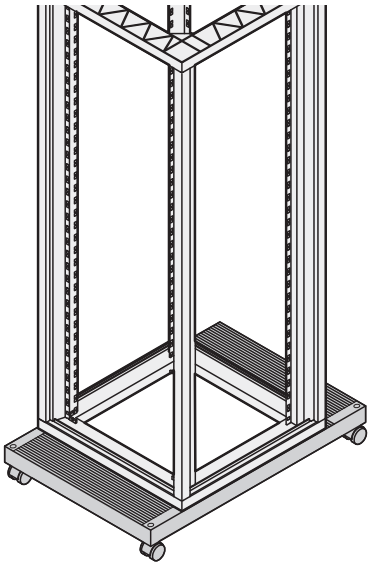

00108052

Mobility with mobile base

Dimensions 19" frame

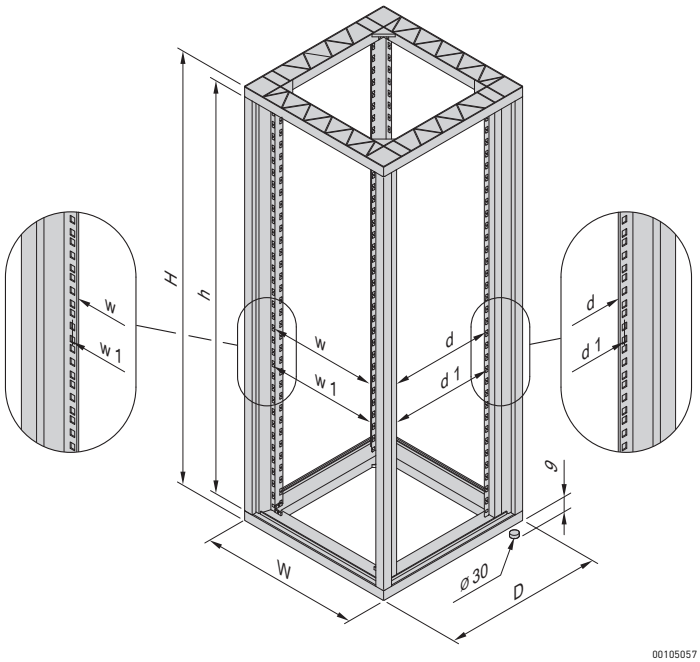

00105057

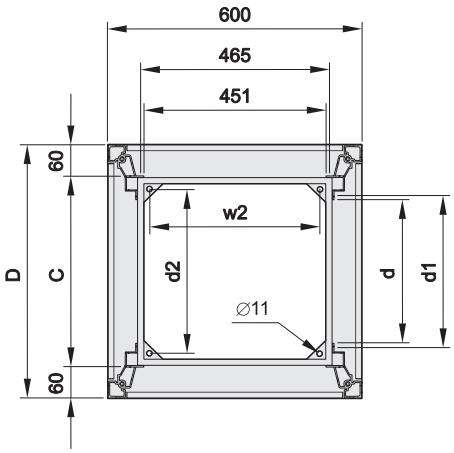

00105058

Height

H with feet	H without feet	Usable height h	
mm	mm	U	mm
998	989	20	890.5
1220	1211	25	1112.5
1398	1389	29	1290.5
1620	1611	34	1512.5
1798	1789	38	1690.5
2020	2011	43	1912.5
2198	2189	47	2090.5

Width

Cabinet width	Upright distance	Bolt-on dimension	Distance between feet
W	w	w1	w2
mm	mm	mm	mm
600	451	465	502

Depth

Cabinet depth	C-dimension	Upright distance	Bolt-on dimension	Distance between feet
D	c	d	d1	d2
mm	mm	mm	mm	mm
600	480	382	396	444
800	680	582	596	644
900	780	682	696	744

Upright 60 mm recessed

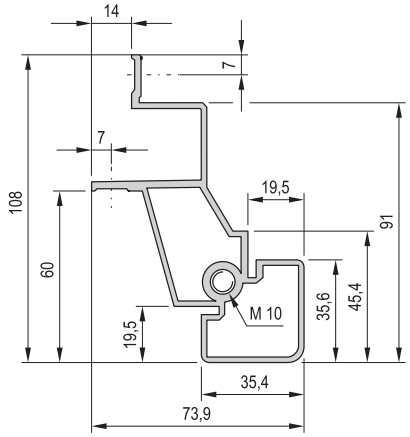

00106051

Cabinets – eurorack

Dimensions Universal frame

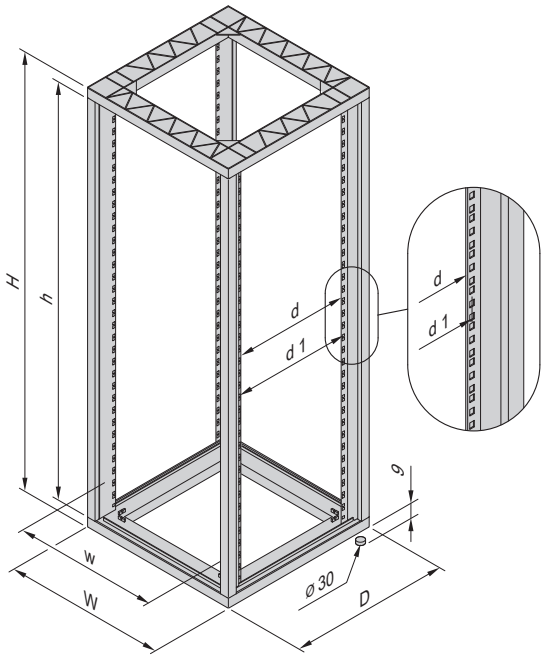

00105056

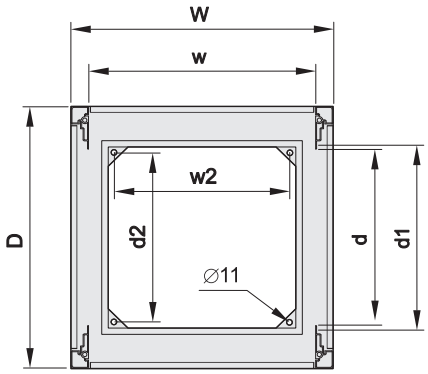

00105059

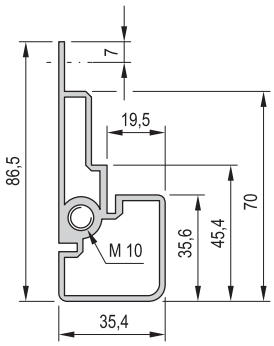

00106052

Height

H with feet	H without feet	Usable height h	
mm	mm	U	mm
998	989	20	890.5
1220	1211	25	1112.5
1398	1389	29	1290.5
1620	1611	34	1512.5
1798	1789	38	1690.5
2020	2011	43	1912.5
2198	2189	47	2090.5

Width

Cabinet width	Upright distance	Distance between feet
W	w	w2
mm	mm	mm
600	528	502
800	728	702

Depth

Cabinet depth	Upright distance	Bolt-on dimension	Distance between feet
D	d	d1	d2
mm	mm	mm	mm
600	426	440	444
800	626	640	644
900	726	740	744

19" cabinet with front and rear door

00108002

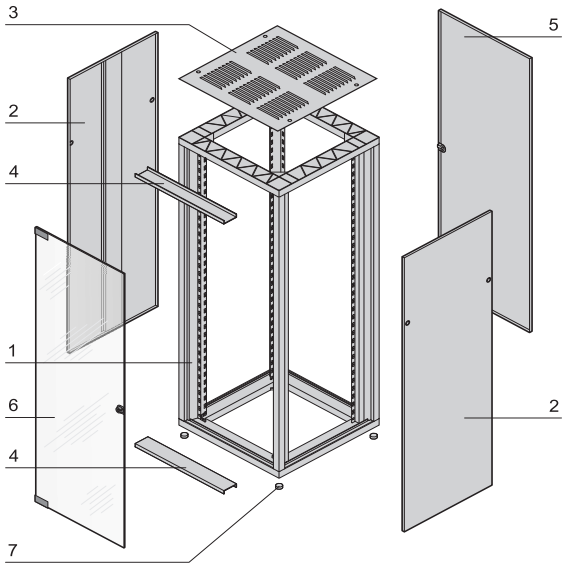

00105060

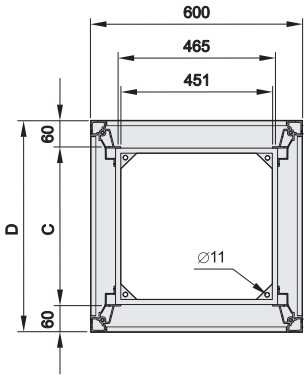

00105067

- Front: smoked glass door, rear: steel door
- 19" cut-outs in front and rear uprights
- Inset covers
- Type of protection IP 40
- Available in two colour combinations:
  - Frame, side panels, door and top cover in black grey (RAL 7021)
  - Frame and top cover in black grey (RAL 7021), side panels and door in light grey (RAL 7035)

Delivery comprises (assembled)

Item	Qty	Description
1	1	19" frame, consisting of 2 Al die-cast frames, RAL 7021, 4 Al extrusion uprights with 19" cut-outs
2	2	Side panel, St, 1 mm, fixes with 2 side panel catches per panel, colour RAL 7021 (black grey) or RAL 7035 (light grey) see Order information
3	1	Top cover with vents, St, 1.5 mm, RAL 7021
4	2	Trims, St, 1 mm, RAL 7021 (for decorative finishing at the top and at the bottom of the front assembly area)
5	1	Rear door, St, 1 mm, opening angle 120°, safety lock with 2 keys Colour RAL 7021
6	1	Glass door, Sekurit, 6 mm, smoke grey, opening angle 120°, safety lock with 2 keys
7	4	Foot, Al

Order Information

Usable height	Height H	Width W	Depth D	C	Colour RAL 7021	Colour RAL 7021/ RAL 7035
U	mm	mm	mm	mm	Part no.	Part no.
38	1798	600	600	480	10117-537	**10117-533**
38	1798	600	800	680	10117-538	**10117-535**
43	2020	600	600	480	10117-539	**10117-534**
43	2020	600	800	680	10117-540	**10117-536**
GND/earthing for frame, doors, side panels, top cover and base plate, PU 1 kit						**21101-539**
Lifting eyes St, zinc-plated, M10, PU 4 pieces						**20117-080**
Adjustable feet Load-carrying capacity 100 kg/foot, St and PA, black, PU 4 pieces						**21101-201**
Castors Load-carrying capacity 100 kg/castor, PU 4 pcs						**20117-024**
Castors Load-carrying capacity 60 kg/castor, PU 4 pcs						**20117-757**

Note

- Please order base/plinth separately, see page 1.280
- Other sizes available on ServicePLUS configuration, see from page 1.289
- Please find the new generation of 19" aluminium electronics cabinets under NOVASTAR, page 1.240

ServicePLUS see page 1.288

Cabinets – eurorack

19" cabinet without front and rear door

00108004

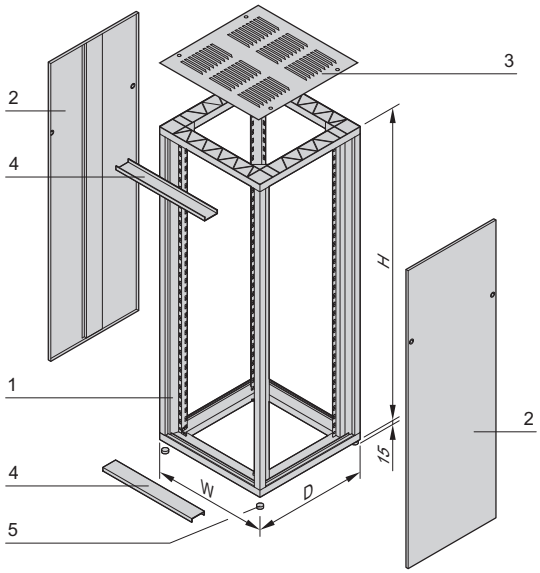

00105061

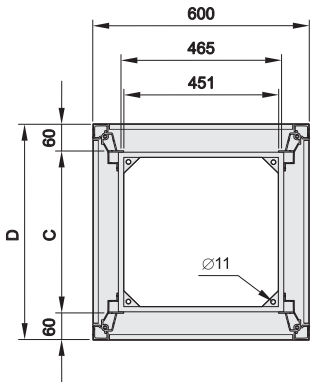

00105067

- Door combination freely selectable
- 19" cut-outs in front and rear uprights
- Inset covers
- Available in two colour combinations:
  - frame, side panels and top cover in black grey (RAL 7021)
  - frame and top cover in black grey (RAL 7021) side panels in light grey (RAL 7035)

Delivery comprises (assembled)

Item	Qty	Description
1	1	19" frame, consisting of 2 Al die-cast frames, RAL 7021, 4 Al extrusion uprights with 19" cut-outs
2	2	Side panel, St, 1 mm, fixes with 2 side panel catches per panel, colour RAL 7021 (black grey) or RAL 7035 (light grey) see Order information
3	1	Top cover with vents, St, 1.5 mm, RAL 7021
4	2	Trim, St, 1 mm, RAL 7021 (for decorative finishing at top and bottom of front assembly area)
5	4	Foot, Al

Order Information

Usable height	Height H	Width W	Depth D	C	Colour RAL 7021	Colour RAL 7021/ RAL 7035
U	mm	mm	mm	mm	Part no.	Part no.
34	1567	600	600	480	10117-541	**10117-527**
34	1567	600	800	680	10117-544	**10117-530**
38	1798	600	600	480	10117-542	**10117-528**
38	1798	600	800	680	10117-545	**10117-531**
43	2020	600	600	480	10117-543	**10117-529**
43	2020	600	800	680	10117-546	**10117-532**
47	2198	600	800	680	10117-547	10117-548
GND/earthing for frame, doors, side panels, top cover and base plate, PU 1 kit						**21101-539**
Lifting eyes St, zinc-plated, M10, PU 4 pieces						**20117-080**
Adjustable feet Load-carrying capacity 100 kg/foot, St and PA, black, PU 4 pieces						**21101-201**
Castors Load-carrying capacity 100 kg/castor, PU 4 pcs						**20117-024**
Castors Load-carrying capacity 60 kg/castor, PU 4 pcs						**20117-757**

Note

- Please order base/plinth separately, see page 1.280
- Please order front and rear door separately, see page 1.278
- Other sizes available on ServicePLUS configuration, see from page 1.289
- Please find the new generation of 19" aluminium electronics cabinets under NOVASTAR, page 1.240

ServicePLUS see page 1.288

Glass door, 120° opening angle

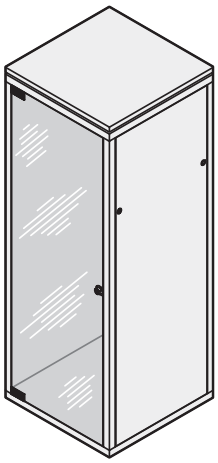

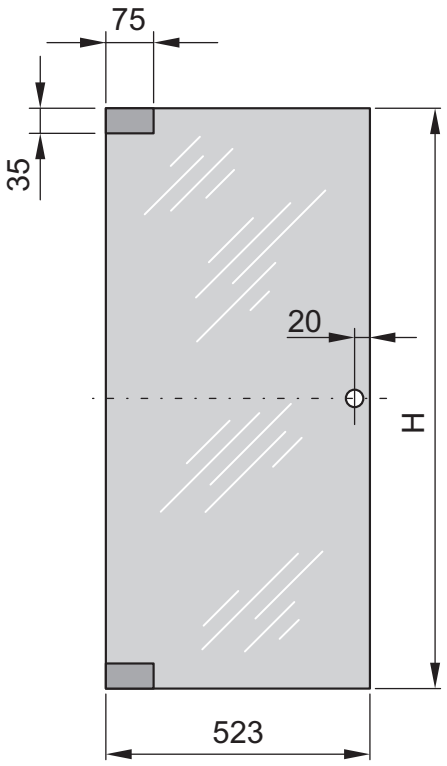

era44522 mra45967

- Can be assembled on all four sides
- Opening angle 120°

Delivery comprises

Item	Qty	Description
1	1	Glass door, Sekurit, 6 mm, smoke grey
2	1	Safety lock with 2 keys
3	2	Hinge, St, 3 mm, black (RAL 9005)
4	1	Assembly kit

Order Information

For cabinet height mm	Usable height U	H mm	For cabinet width mm	Part no.
782	16	733	553	**20117-744**
945	20	911	553	**20117-745**
1167	25	1133	553	**20117-746**
1290	29	1311	553	20117-747
1567	34	1534	553	**20117-748**
1798	38	1711	553	**20117-749**
2020	43	1934	553	**20117-751**
2198	47	2111	553	20117-752

- Doors with opening angle 180° see page 1.291
- Further dimensions available on ServicePLUS, see from page 1.291

Steel door, 120° opening angle

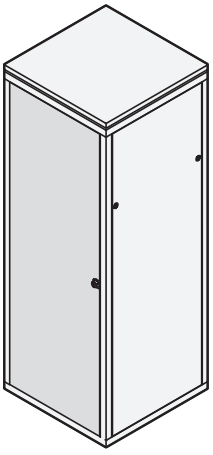

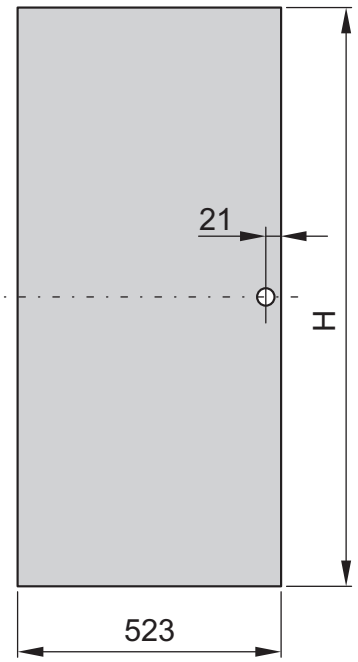

00105053 a4491c

- Can be assembled on all four sides
- Opening angle 120°
- Colour black grey (RAL 7021) or light grey (RAL 7035)

Delivery comprises

Item	Qty	Description
1	1	Steel door, St, 1 mm
2	1	Safety lock with 2 keys
3	1	Assembly kit

Order Information

For cabinet height mm	Usable height U	H mm	For cabinet width mm	Colour RAL 7021 Part no.	Colour RAL 7035 Part no.
767	16	733	600	22117-934	**21117-184**
945	20	911	600	22117-935	**21117-185**
1167	25	1133	600	22117-936	**21117-186**
1290	29	1311	600	23117-012	**21117-187**
1567	34	1534	600	22117-937	**21117-188**
1798	38	1711	600	22117-938	**21117-189**
2020	43	1934	600	22117-940	**21117-190**
2198	47	2111	600	22117-942	21117-191

- Further dimensions available on ServicePLUS, see from page 1.292
- **180°** steel door with lever handle see ServicePLUS configuration, page 1.292

Cabinets – eurorack

Glazed door, 120° opening angle

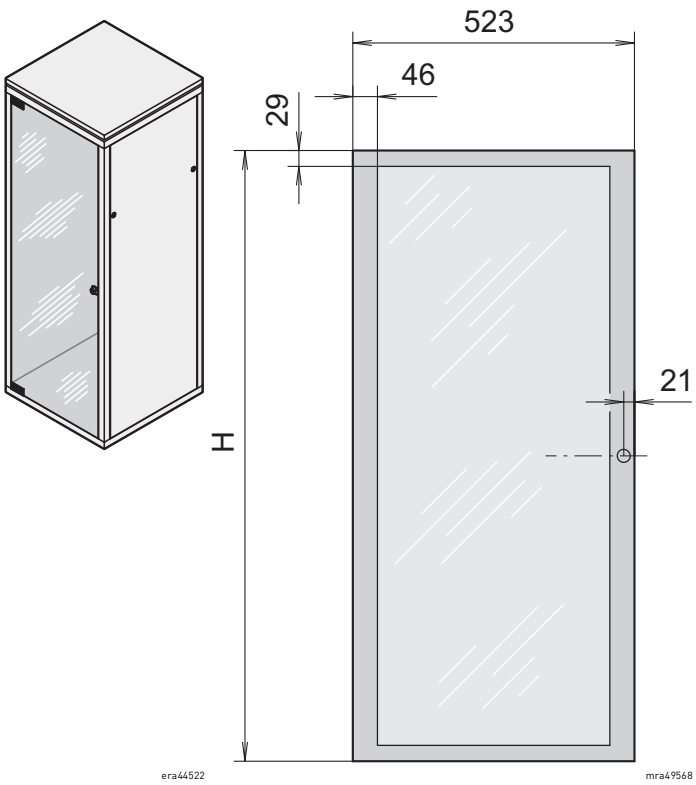

- Can be assembled on all four sides
- Opening angle 120°
- Frame colour: black grey (RAL 7021) or light grey (RAL 7035)

Delivery comprises

Item	Qty	Description
1	1	Door frame, Al, 2 mm, RAL 7035
2	1	Plexiglass pane, 2 mm, clear
3	1	Safety lock with 2 keys
4	1	Assembly kit

Order Information

For cabinet height	Usable height	H	For cabinet width	Colour RAL 7021	Colour RAL 7035
mm	U	mm	mm	Part no.	Part no.
782	16	733	600	22117-943	20117-769
945	20	911	600	22117-944	20117-770
1167	25	1133	600	22117-945	20117-771
1290	29	1311	600	23117-011	20117-772
1567	34	1534	600	22117-946	20117-765
1798	38	1711	600	22117-947	20117-766
2020	43	1934	600	22117-949	20117-767
2198	47	2111	600	22117-951	20117-768

- Further dimensions available on ServicePLUS configuration, see page 1.292

Door hinge bracket for shortened doors

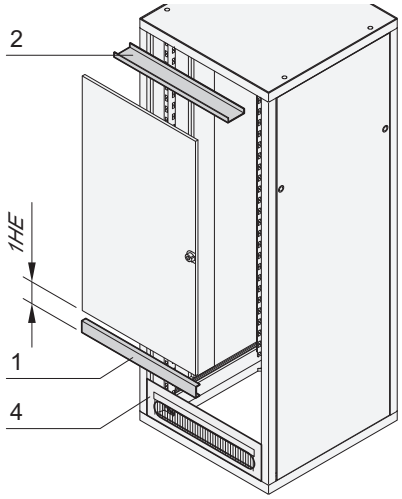

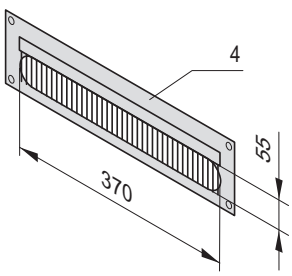

Cable ducting plate

- For doors which do not cover the full cabinet height
- 1 U space required (may be mounted above and below the door)
- The clearance can be covered with 19" filler panels or with cable ducting plates 3 U/4 U

Delivery comprises (kit)

Item	Qty	Description
1	1	Door hinge bracket, 19", St, 1.5 mm, RAL 7021
2	1	Trim, St, 1 mm, RAL 7021, cover for frame
3	1	Assembly kit

Order Information

Description	Part no.
Door hinge bracket for shortened doors	**22117-798**
Item 4 Cable ducting **3 U**, RAL 7021, with brush strip and fixing materials kit, 1 piece	**20118-796**
Item 4 Cable ducting **4 U**, RAL 7021, with brush strip and fixing materials kit, 1 piece	**20118-797**

- 19" front panels see chapter Cabinet Accessories, page 3.2

Base plates

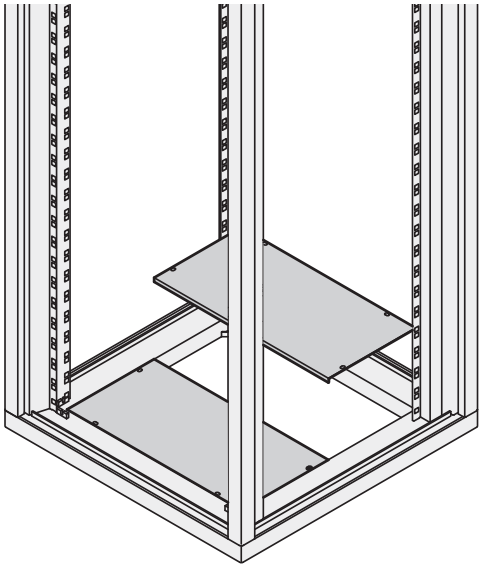

00108051

- For covering the base opening, two parts
- Mounting on frame, overlaying

Delivery comprises

Item	Qty	Description
1	2	Base plate, St, 1.5 mm, RAL 7021, width 469 mm, depth 234 mm (at cabinet depth 600 mm), depth 334 mm (at cabinet depth 800 mm)
2	1	Assembly kit

Order Information

For cabinet width mm	For cabinet depth mm	Part no.
600	600	22117-826
600	800	22117-827

Plain bases/plinths

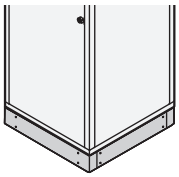

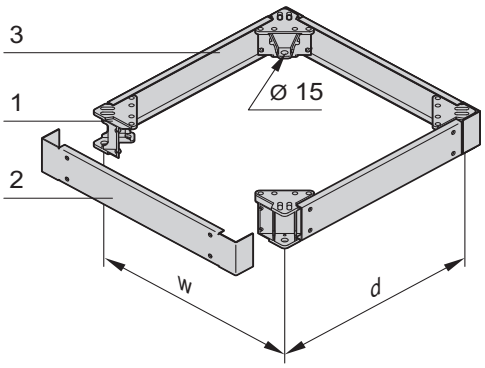

ERA44532 00108057

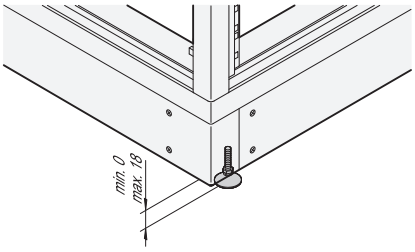

era44553

- Height 100 mm
- Covers removable from all sides

Delivery comprises

Item	Qty	Description
1	4	Corner piece, Al die-cast
2	2	Cover, St, 2.5 mm, RAL 7021, for front and rear
4	2	Cover, St, 2.5 mm, RAL 7021, for sides
4	1	Assembly kit

Order Information

For cabinet width mm	For cabinet depth mm	Part no.
600	600	22117-830
600	800	22117-831
Adjustable feet Load-carrying capacity 100 kg/foot, St and PA, black, PU 4 pieces		21101-201

Note

- Castors cannot be used with a base/plinth

Cabinets – eurorack

Bases/plinths with ventilation

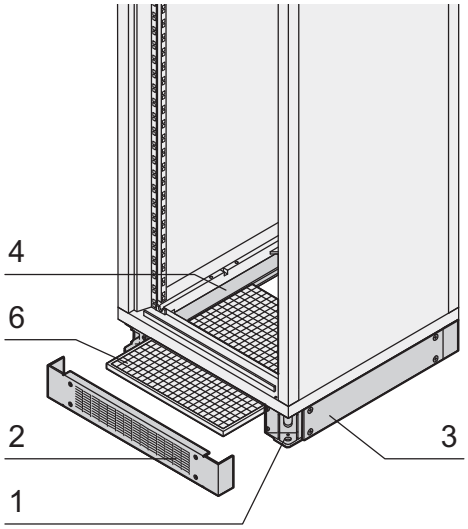

ERTP0057

- Height 100 mm
- Covers removable on all sides
- Can be assembled with filter

Delivery comprises (Kit)

Item	Qty	Description
1	4	Corner piece, Al die-cast
2	2	Cover, St, 2.5 mm, RAL 7021, for front and rear, with vent slots
3	2	Cover, St, 2.5 mm, RAL 7021, for sides
4	2	Filter retention
5	1	Assembly kit

Order Information

For cabinet width mm	For cabinet depth mm	Part no.
600	600	22117-864
600	800	**22117-865**
Filter mat Item 6 for cabinet depth 600 mm, width 600 mm, PU 3 pieces		**60114-514**
Filter mat Item 6 for cabinet depth 800 mm, width 600 mm, PU 3 pieces		**60114-515**

Note

- Filter mat not included, please order separately

Mounting system with C-profiles

Mounting system

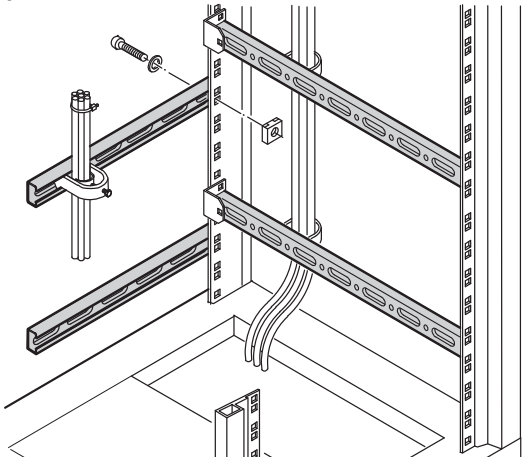

ertp0020

C-profile/slide nut

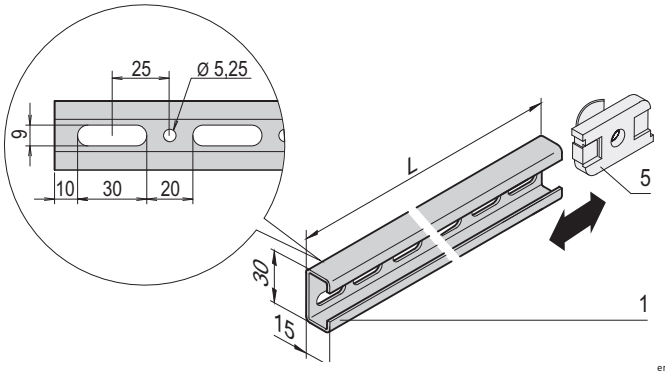

ertp0021

Mounting bracket

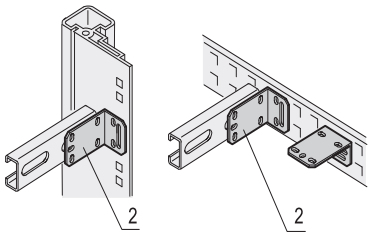

ertp0022

Combination bracket

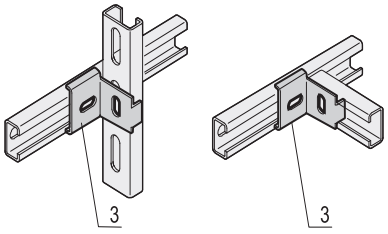

ertp0024

L-bracket

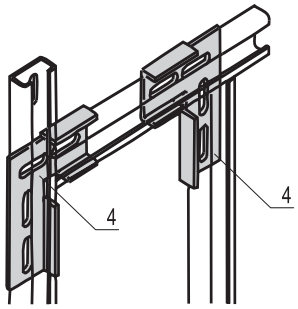

ertp024a

- The mounting system serves for assembly of horizontal and vertical mounting planes; C-profiles can be positioned freely by using combination and L-brackets in conjunction with slide nuts
- Slide nuts, cable eyes or cable shells can be inserted directly into the C-profiles

Delivery comprises

Item	Qty	Description
1	see Order Information	C-profile, St, 1.5 mm, finish AlZn

Order Information

For cabinet width	For cabinet depth	For cabinet height	Length L	Qty/PU	Part no.
mm	mm	mm	mm	piece	
600	600	–	450	4	**22114-455**
	800	–	650	4	**22114-457**
	900	–	750	4	**22114-458**
800	600	–	650	4	**22114-457**
	800	–	650	4	**22114-457**
–	–	1600	1500	2	**22114-460**
–	–	1800	1650	2	**22114-461**
–	–	2000	1900	2	**22114-462**
Item 2 Mounting bracket for cabinet upright or depth member assembly, St, 2.5 mm, zinc-plated, PU 4 pieces, incl. assembly kit					**21120-145**
Item 3 Combination bracket for connection of two C-profiles, St, 2.5 mm, zinc-plated, PU 4 pieces, incl. assembly kit					**21120-146**
Item 4 L-bracket for edge-to-edge or corner connection of two C-profiles, St, 2.5 mm, zinc-plated, 2 right hand brackets and 2 left hand brackets, incl. assembly kit					**21120-147**
Item 5 Slide nut for C-profiles, PU 10 pieces					**21120-140**
Item 5 Slide nut for C-profiles, PU 100 pieces					**21101-127**
Delivery: supplied loose with cabinet or frame					**Part no./35**

Note

- Please order mounting brackets separately

Cable eyes for C-profiles

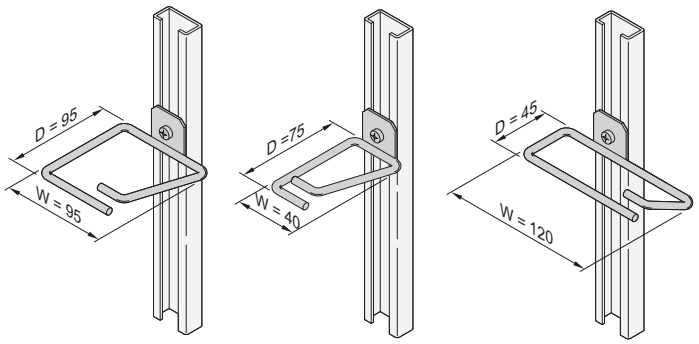

00507050 00507051 00507052

Delivery comprises

Item	Qty	Description
1	4	Cable eye, round steel, 6 mm, zinc-plated, with integrated anti-rotation protection

Order Information

Description	W mm	D mm	Part no.
Cable eye for C-profile	120	45	**20118-339**
Cable eye for C-profile	40	75	**20118-554**
Cable eye for C-profile	95	95	**20118-340**
Assembly kit for 4 cable eyes, PU 1 kit			**21101-596**

Note

- Please order assembly kit separately

Cable shells

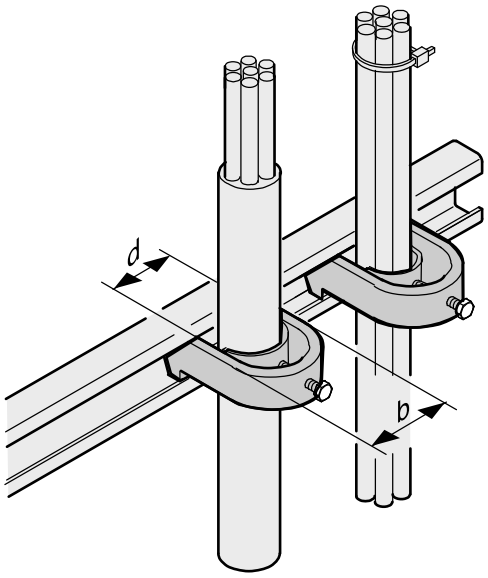

vnt009

- For mounting of cables on C-profiles and cable support rails

Delivery comprises

Item	Qty	Description
1	10	Cable shell, St, 2 mm, tin-plated, with plastic half shells

Order Information

For cable bundle d mm	b mm	Part no.
18 ... 22mm	26	**20118-775**
22 ... 26mm	30	**20118-776**
26 ... 30mm	34	**20118-777**
30 ... 34mm	38	**20114-728**
34 ... 38mm	45	**20114-729**
38 ... 42mm	48	**20114-730**
42 ... 46mm	51	**20114-731**
46 ... 50mm	54	20118-778

Slide rail

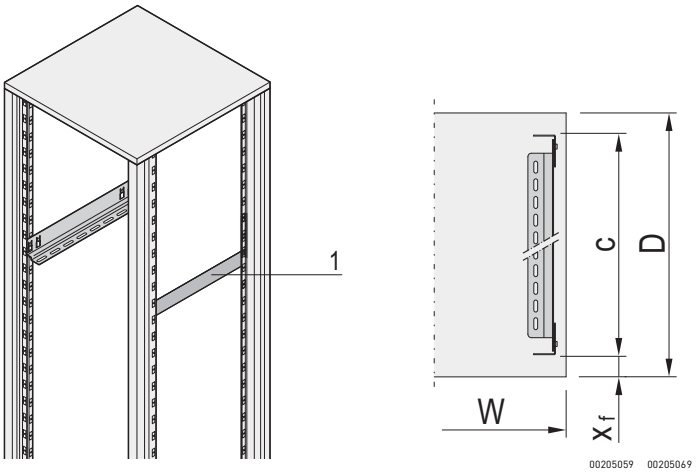

c = pitch of the 19" uprights

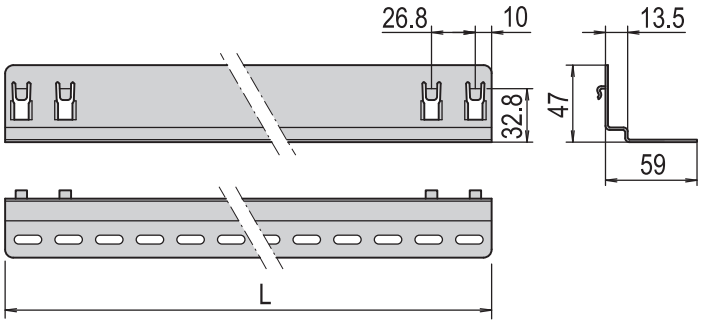

L = length

- For safe and simple installation of heavy 19" subracks
- Can be hung into the upright at 1 U increments
- Load-carrying capacity max. 25 kg per pair

Delivery comprises

Item	Qty	Description
1	10	Slide rail for insertion, St, 1.5 mm, surface AlZn
2	1	Assembly kit

Order Information

For cabinet depth mm	Length L mm	c mm	x_f mm	Part no.
600	420	480	60	**21127-197**
800	620	680	60	**21127-198**

Note

- Can only be fitted to 19" upright
- Further dimensions available on ServicePLUS, see from page 1.298

Short slide rail

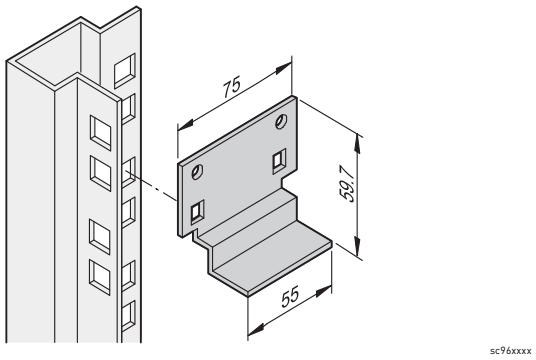

- For mounting on the vertical cabinet uprights
- Can be hung at 1 U increments
- Static load-carrying capacity 15 kg max per pair

Delivery comprises

Item	Qty	Description
1	2 / 10	Short slide rail, St, 1,5 mm, finish AlZn
2	1	Assembly kit

Order Information

Description	Qty/PU	Part no.
Short slide rail	2	**20118-592**
Short slide rail	10	**20118-593**

Cabinets – eurorack

19" fixed shelf, 75 kg

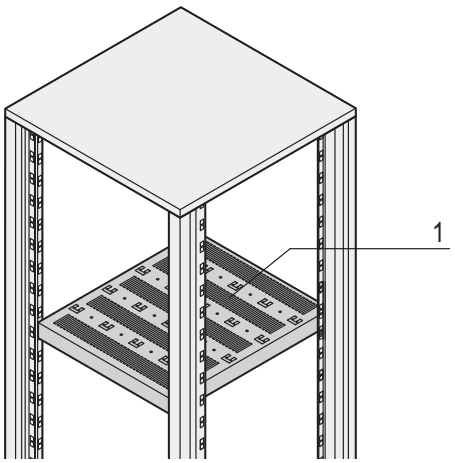

00105054

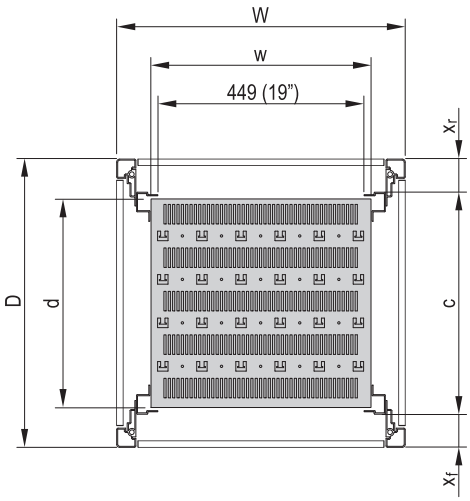

00105050

- Static load-carrying capacity 75 kg
- Mounting height 1 U, for mounting on cabinet uprights, full depth
- With hammer head perforation to fix cable ties

Delivery comprises

Item	Qty	Description
1	1	Shelf, St, 1.5 mm, RAL 7021
2	1	Assembly kit incl. GND/earthing kit

Order Information

Cabinet dimensions W x D	Usable surface w x d	x_f	x_r	c	Part no.
mm	mm	mm	mm	mm	
600 x 600	477 x 443	60	60	480	**22117-842**
600 x 800	477 x 643	60	60	680	**22117-843**

Note

- Further dimensions available on ServicePLUS, see from page 1.299

19'' telescopic shelf, 70 kg

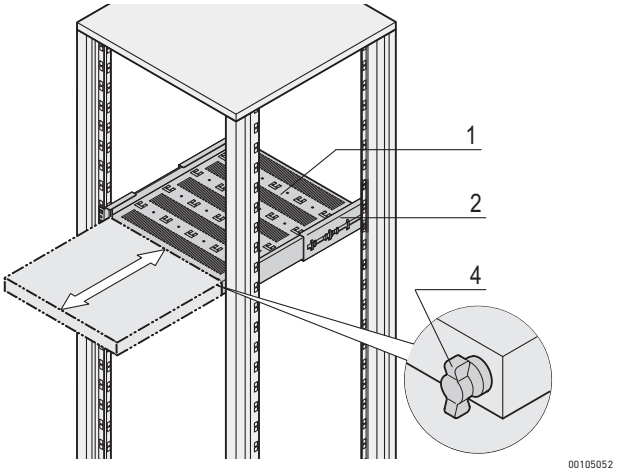

00105052

- Static load-carrying capacity at full extension 70 kg
- Mounting height 2 U, for mounting on four 19" panel/slide mounts
- Incl. telescopic slides
- Locking with T-bar lock possible
- Hammer head perforation to fix cable ties
- 2 versions
  - Full depth
  - Depth shortened by 100 mm for rear cable ducting

Delivery comprises

Item	Qty	Description
1	1	Shelf with perforation, St, 1.5 mm, RAL 7021
2	2	Telescopic slide, 2 U
3	1	Assembly kit

Full depth

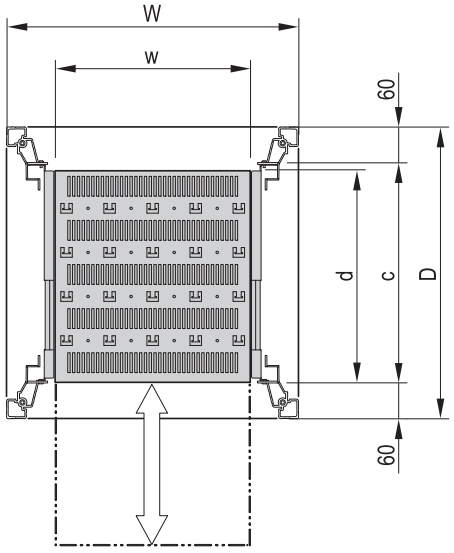

00105069

Order Information

Full depth

Cabinet dimensions W x D	Usable surface w x d	c	Full depth
mm	mm	mm	Part no.
600 x 600	405 x 482	480	21130-353
600 x 800	405 x 682	680	21130-355
Item 4 T-bar lock for 1 telescopic shelf (can be mounted right or left), 1 piece			23130-092
GND/earthing for telescopic shelf PU 1 kit, for NOVASTAR, eurorack			21120-189

Shortened depth

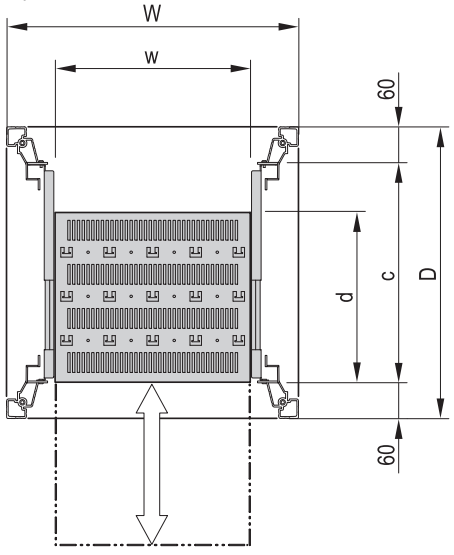

00105070

Order Information

Shortened by 100 mm

Cabinet dimensions W x D	Usable surface w x d	c	Shortened by 100 mm
mm	mm	mm	Part no.
600 x 600	405 x 382	480	21130-352
600 x 800	405 x 582	680	21130-354
Item 4 T-bar lock for 1 telescopic shelf (can be mounted right or left), 1 piece			23130-092
GND/earthing for telescopic shelf PU 1 kit, for NOVASTAR, eurorack			21120-189

c = max. pitch of the slide mounts

Cabinets – eurorack

Cable panels

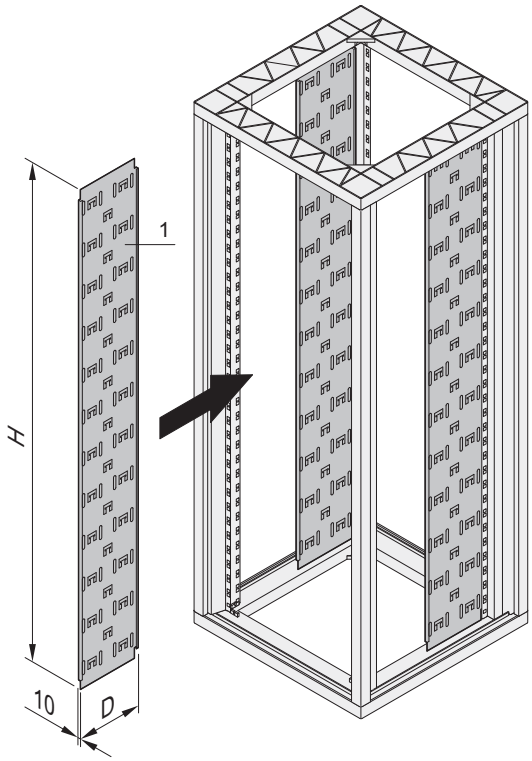

00108050

- For mounting direct onto the frame, can be recessed with depth members
- Fixing of cables with cable ties or Velcro
- Colour RAL 7021 (black grey) or RAL 7035 (light grey)
- Widths 150 mm and 250 mm

Delivery comprises

Item	Qty	Description
1	2	Cable panel with cut-outs, St, 1 mm
2	1	Assembly kit

Order Information

For cabinet height H		D	RAL 7021	RAL 7035
U	mm	mm	Part no.	Part no.
38	1798	150	23117-020	23117-026
43	1934	150	**23117-021**	23117-027
47	2020	150	**23117-022**	23117-028
38	1798	250	**23117-023**	23117-029
43	1934	250	**23117-024**	23117-030
47	2020	250	**23117-025**	23117-031
Depth member for 19" eurorack 600 mm cabinet depth, St, 1.5 mm, AlZn, PU 2 pieces			**22117-376**	
Depth member for 19" eurorack 800 mm cabinet depth, St, 1.5 mm, AlZn, PU 2 pieces			**22117-377**	

Note

- Cable ties, see page 1.287
- Velcro, see page 1.287

Cable ties

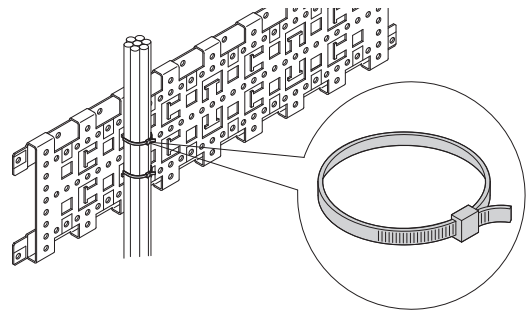

01005078

Delivery comprises

Item	Qty	Description
1	25	Cable tie, plastic

Order Information

Description		Part no.
Cable tie	92 mm x 2.5 mm	**20118-351**
Cable tie	186 mm x 5 mm	**20118-352**
Cable tie	360 mm x 5 mm	**20118-353**

Velcro

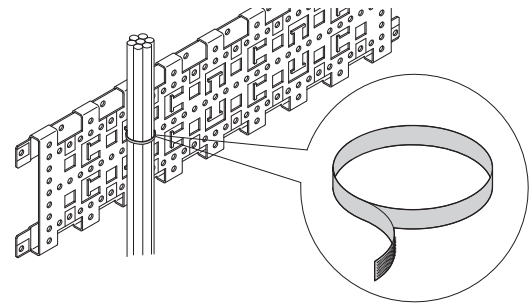

01005079

- Length 300 mm (for cable bundles of max. 90 mm diameter)

Delivery comprises

Item	Qty	Description
1	10	Velcro strip, PE/PA, black, length 300 mm

Order Information

Description	Part no.
Velcro strip	**20118-624**

Cabinets – eurorack 19" ServicePLUS

configuration

Components can be varied and combined freely

Simple. Fast. To the ideal product.

- Configuration tables from page 1.289
- Online configuration: www.schroff.co.uk/configuration

assembly

Fitting of all mechanical, electrical and electronic components by our specialists

Assembled by professionals. Double benefit!

- Without extra cost
- Ready for despatch within 10 working days

modification

Custom drillings, cut-outs and special colours for off-the-shelf products

Small changes. Large impact.

- Download CAD data and send back with modifications
- Ready for despatch within 15 working days

solution

Integration and custom developments

Simple. Fast. From one source.

- Climate control, complete assembly, cabling (power supply), function test
- Special sizes, customised solutions

academy

Knowledge transfer and partnership

Knowledge. Sharing. Partnerships.

- Seminars, white papers, CAD drawings, test reports, user reports

lifecycle

Flexible support throughout the product lifecycle

We are with you. For the entire product life.

- Delivery to point of use, installation service, exchange service, replacement parts

Cabinets – *eurorack* 19" ServicePLUS

eurorack 19" ServicePLUS: configuration and assembly

- Dimensions:
  - Height: 20 ... 47 U (998 ... 2198 mm)
  - Width: 600 mm
  - Depth: 600, 800 mm
- Colours:
  - Frame, top cover and plinth in black grey (RAL 7021);
  - Side panels and doors in light grey (RAL 7035) or black grey (RAL 7021)
- Build your cabinet out of individual components (please suffix each part number with /05)
- Once you have selected the desired cabinet dimensions, the row number (first column of the configuration tables) will guide you through all subsequent configuration pages that apply to these dimensions (see example below)
- The cabinet is assembled by us and ready for despatch within 10 working days

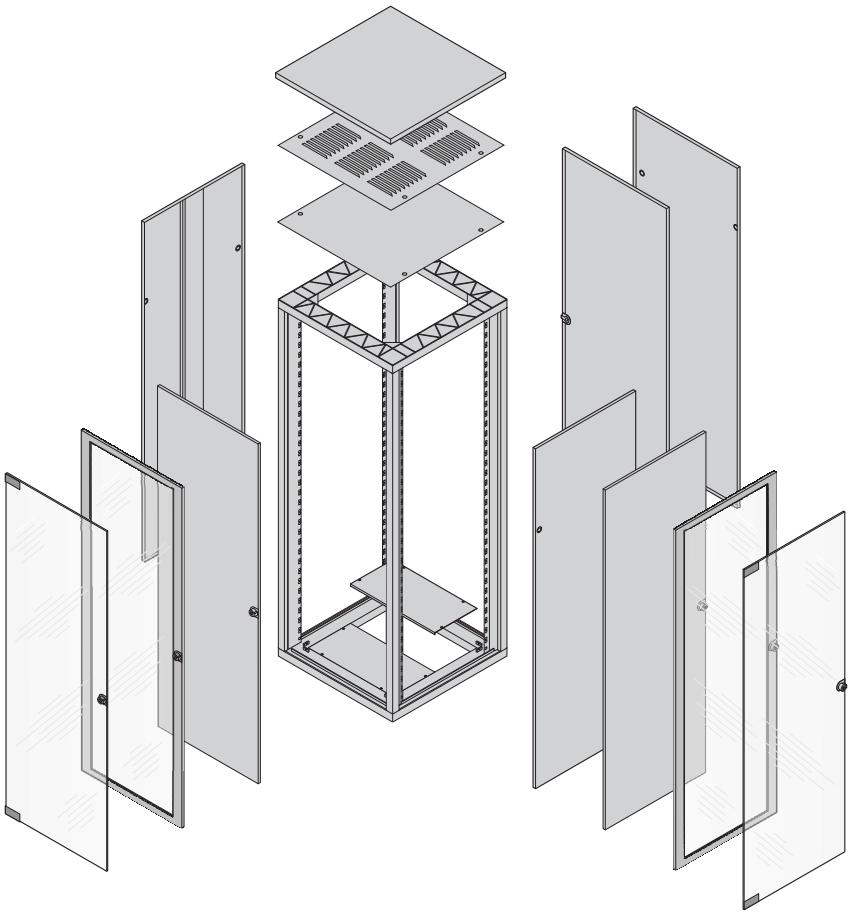

00101534

	Page
Frames, side-by-side mounting kit, GND/ earthing, adjustable feet, castors	1.290
Side panels, glass doors	1.291
Doors	1.292
Door hinge bracket, cable ducting	1.293
Flush top covers	1.294
Raised top covers	1.295
Base plates, plinths	1.296
Third 19" plane, lateral cable ducting	1.297
19" slide rails	1.298
19" fixed or telescopic shelves	1.299
Dimensions 19" frame	1.274
ServicePLUS configuration eurorack Universal	1.300

Example configuration (here: row 14)

Qty	Description	Order no.
1	19" frame, RAL 7021, height 2020 mm, width 600 mm, depth 800 mm, 1 piece	22117-779/05
1	Adjustable foot, PU 4 pieces	21101-201/05
1	Side panel, screw fixed, RAL 7035, PU 2 pieces	21117-172/05
1	Front glass door, RAL 7035, opening angle 120°, 1 piece	20117-751/05
1	Rear steel door, RAL 7035, opening angle 120°, 1 piece	21117-190/05
1	DIN profile half cylinder, 1 piece	60114-121/05
..	.....	.....

Cabinets – *eurorack* 19" ServicePLUS

eurorack 19" Frames, side-by-side mounting kit, GND/earthing, adjustable feet, castors

Order Information

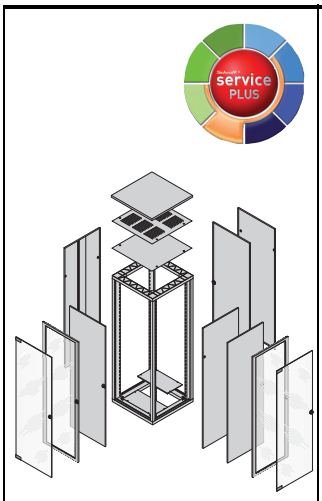

					19" frame 19" plane to front and rear	Side-by-side mounting kit	GND/earthing	Adjustable feet	Castors	
									Load-carrying capacity 180 kg per kit	Load-carrying capacity 300 kg per kit
					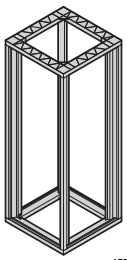 era45341	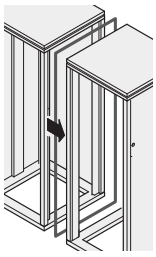 ERTP0070	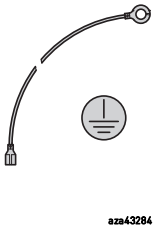 aza43284	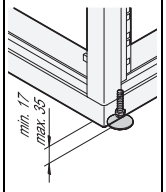 era44553	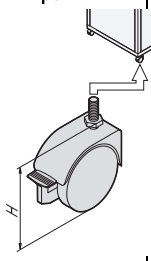 era44556	
					19" frame, frame Al die-cast, uprights Al extrusion, RAL 7021, defined pitch between front and rear 19" plane	serves to bolt together two cabinets; sealing strips are PU foam	for frame, door, side panel, top cover, base plate	St, PA, black, load-carrying capacity 100 kg per foot	assembly directly onto frame, height H = 93 mm, 2 locking, 2 non-locking castors	assembly directly onto frame, height H = 110 mm, 2 locking, 2 non-lockingcastors
	Cabinet dimensions									
	Height		Width	Depth						
No.	U	mm	mm	mm	1 piece assembled	1 piece supplied loose	PU 1 kit assembled	PU 4 pieces assembled	PU 4 pieces enclosed loose	PU 4 pieces enclosed loose
1	20	998	600	600	22117-977	20117-156	21101-539	21101-201	20117-757	20117-024
2	20	998	600	800	22117-978					
3	25	1220	600	600	22117-979	20117-156	21101-539	21101-201	20117-757	20117-024
4	25	1220	600	800	22117-980					
5	29	1398	600	600	22117-981	20117-156	21101-539	21101-201	20117-757	20117-024
6	29	1398	600	800	22117-982					
7	34	1620	600	600	22117-772	20117-156	21101-539	21101-201	20117-757	20117-024
8	34	1620	600	800	22117-773					
9	34	1620	600	900	22117-774					
10	38	1798	600	600	22117-775	20117-156	21101-539	21101-201	20117-757	20117-024
11	38	1798	600	800	22117-776					
12	38	1798	600	900	22117-977					
13	43	2020	600	600	22117-978	20117-156	21101-539	21101-201	20117-757	20117-024
14	43	2020	600	800	22117-979					
15	43	2020	600	900	22117-980					
16	47	2198	600	600	22117-983	20117-156	21101-539	21101-201	20117-757	20117-024
17	47	2198	600	800	22117-981					
18	47	2198	600	900	22117-984					

Frame dimensions, see page 1.274

Cabinets – eurorack 19" ServicePLUS

eurorack 19" Side panels, glass doors

Order Information

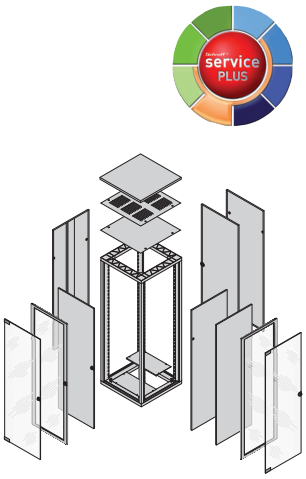

	Cabinet dimensions				Side panel with side-panel catches		Side panel with safety lock		Glass door Opening angle 120°	Glass door Opening angle 180°	Glass door DIN profile half cylinder
					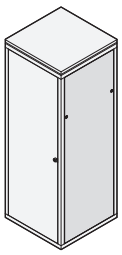 ERA44517		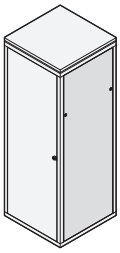 ERA44517		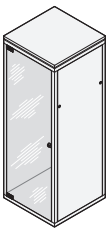 mra45967	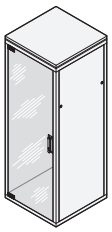 00101506	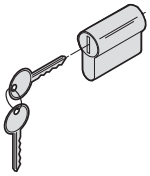 SZA44484
					St, 1 mm, RAL 7035, 2 side panel catches; instead of a side panel, doors can also be mounted laterally	St, 1 mm, RAL 7021, 2 side panel catches; instead of a side panel, doors can also be mounted laterally	St, 1 mm, RAL 7035, 2 safety locks; instead of a side panel, doors can also be mounted laterally	St, 1 mm, RAL 7021, 2 safety locks; instead of a side panel, doors can also be mounted laterally	glazing smoke grey, Sekurit, 6 mm, safety lock with 2 keys	glazing smoke grey, Sekurit, 6 mm, lever handle (incl. blank insert)	DIN profile half cylinder for lever handle
					RAL 7035	RAL 7021	RAL 7035	RAL 7021			
	Height		Width	Depth	PU 2 pieces	PU 2 pieces	PU 2 pieces	PU 2 pieces	1 piece	1 piece	1 piece
No.	U	mm	mm	mm	assembled	assembled	assembled	assembled	assembled	assembled	assembled
1	20	998	600	600	21117-158	22117-993	–	–	**20117-745**	–	–
2	20	998	600	800	21117-167	22117-994					
3	25	1220	600	600	21117-159	22117-995	–	–	**20117-746**	–	–
4	25	1220	600	800	21117-168	22117-996					
5	29	1398	600	600	21117-160	22117-997	22117-185	23117-002	20117-747	22117-239	**60114-121**
6	29	1398	600	800	21117-169	22117-998	22117-186	23117-003			
7	34	1620	600	600	21117-161	22117-958	22117-173	23117-004	**20117-748**	22117-227	**60114-121**
8	34	1620	600	800	21117-170	22117-959	22117-177	23117-005			
9	34	1620	600	900	21117-179	22117-960	22117-181	23117-006			
10	38	1798	600	600	21117-162	22117-961	22117-174	23117-007	**20117-749**	22117-228	**60114-121**
11	38	1798	600	800	21117-171	22117-962	22117-178	23117-008			
12	38	1798	600	900	21117-180	22117-963	22117-182	23117-009			
13	43	2020	600	600	21117-163	22117-964	22117-175	22117-968	**20117-751**	22117-229	**60114-121**
14	43	2020	600	800	21117-172	22117-965	22117-179	22117-969			
15	43	2020	600	900	21117-181	22117-966	22117-592	22117-970			
16	47	2198	600	600	21117-164	22117-999	22117-176	23117-010	20117-752	22117-230	**60114-121**
17	47	2198	600	800	21117-173	22117-967	22117-180	22117-971			
18	47	2198	600	900	21117-182	23117-001	22117-593	22117-972			

Note: Doors can also be assembled laterally, in place of side panels

Order Information

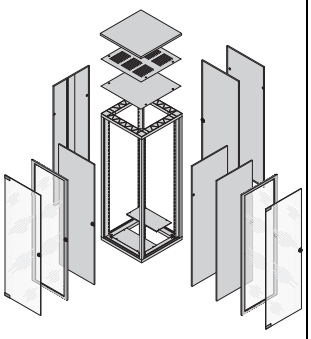

					Glazed acrylic glass door		Steel door		Steel door		
					Opening angle 120°		Opening angle 120°		Opening angle 180°		DIN profile half cylinder
					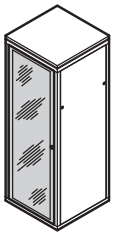 a4491b		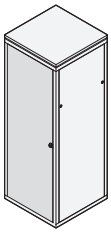 00101506		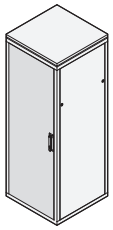 00101504		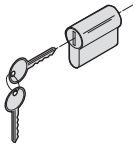 SZA44484
	Cabinet dimensions				frame, Al, 2 mm, RAL 7021; acrylic glass, 2 mm, safety lock with 2 keys	frame, Al, 2 mm, RAL 7021; acrylic glass, 2 mm, safety lock with 2 keys	St, 1 mm, RAL 7035, safety lock with 2 keys	St, 1 mm, RAL 7035, safety lock with 2 keys	St, 1 mm, RAL 7035, lever handle (incl. blank insert), please order DIN profile half cylinder separately	St, 1 mm, RAL 7021, lever handle (incl. blank insert), please order DIN profile half cylinder separately	DIN profile half cylinder for lever handle
	Height		Width	Depth	RAL 7035	RAL 7021	RAL 7035	RAL 7021	RAL 7035	RAL 7021	
No.	U	mm	mm	mm	1 piece assembled	1 piece assembled	1 piece assembled	1 piece assembled	1 piece assembled	1 piece assembled	1 piece assembled
1	20	998	600	600	20117-770	22117-944	**21117-185**	22117-935	–	–	–
2	20	998	600	800							
3	25	1220	600	600	20117-771	22117-945	**21117-186**	22117-936	–	–	–
4	25	1220	600	800							
5	29	1398	600	600	20117-772	23117-011	**21117-187**	23117-012	22117-201	23117-013	**60114-121**
6	29	1398	600	800							
7	34	1620	600	600	20117-765	22117-946	**21117-188**	22117-937	22117-189	23117-014	**60114-121**
8	34	1620	600	800							
9	34	1620	600	900							
10	38	1798	600	600	20117-766	22117-947	**21117-189**	22117-938	22117-190	23117-015	**60114-121**
11	38	1798	600	800							
12	38	1798	600	900							
13	43	2020	600	600	20117-767	22117-949	**21117-190**	22117-940	22117-191	22117-973	**60114-121**
14	43	2020	600	800							
15	43	2020	600	900							
16	47	2198	600	600	20117-768	22117-951	21117-191	22117-942	22117-192	22117-975	**60114-121**
17	47	2198	600	800							
18	47	2198	600	900							

Cabinets – eurorack 19" ServicePLUS

eurorack 19" Door hinge bracket, cable ducting

Order Information

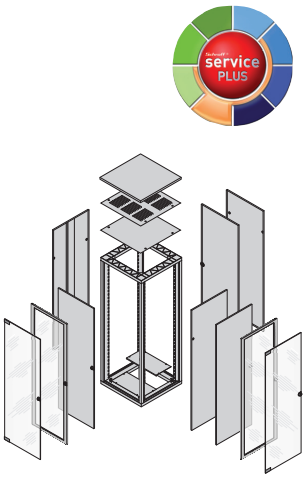

		Cabinet dimensions			Door hinge bracket for 19" frame	Cable ducting frame	
		Height	Width	Depth		3 U	4 U
No.	U	mm	mm	mm	1 piece assembled	1 piece assembled	1 piece assembled
					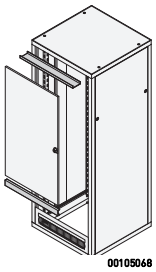 00105068 St, 1.5 mm, RAL 7021, mounting to front or rear, above or below the short door, 1 U assembly area, please order 19" cable ducting separately	07011081 St, 2.5 mm, RAL 7021, with black brush strip for short doors or rear panels	
1	20	998	600	600	**22117-798**	**20118-796**	**20118-797**
2	20	998	600	800			
3	25	1220	600	600	**22117-798**	**20118-796**	**20118-797**
4	25	1220	600	800			
5	29	1398	600	600	**22117-798**	**20118-796**	**20118-797**
6	29	1398	600	800			
7	34	1620	600	600	**22117-798**	**20118-796**	**20118-797**
8	34	1620	600	800			
9	34	1620	600	900			
10	38	1798	600	600	**22117-798**	**20118-796**	**20118-797**
11	38	1798	600	800			
12	38	1798	600	900			
13	43	2020	600	600	**22117-798**	**20118-796**	**20118-797**
14	43	2020	600	800			
15	43	2020	600	900			
16	47	2198	600	600	**22117-798**	**20118-796**	**20118-797**
17	47	2198	600	800			
18	47	2198	600	900			

eurorack 19" Flush top covers

Order Information

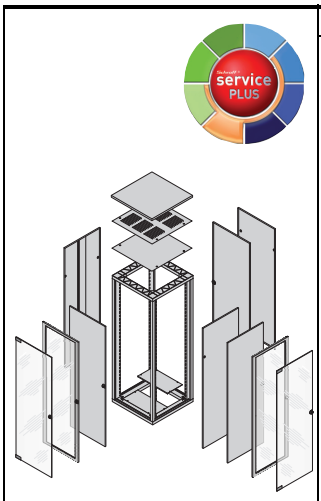

		Cabinet dimensions			Flush top cover			Top cover fan for flush louvered top cover			
	Height		Width	Depth	Plain	Louvered	Lifting eyes	Fan trays without fans	Fan for fan tray	Thermostat	Speed control
					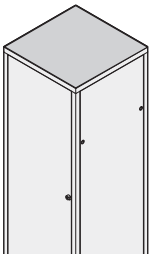 ERA44525	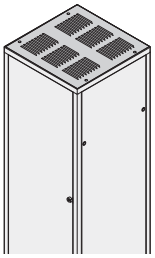 ERA45344	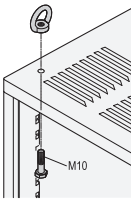 ERA44560	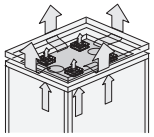 ertp0055	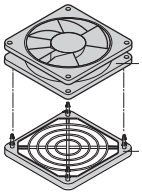 KTA44844	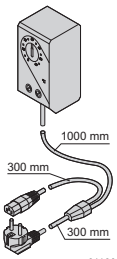 01108052	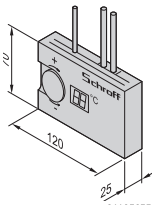 01105055
					St, 1 mm, RAL 7021	St, 1 mm, RAL 7030	lifting eye for flush cover, application and static load-carrying capacity in accordance with DIN 582	St, 1.5 mm, RAL 7021, all 6 openings closed with PE blank plugs, terminal clamp with connecting cable, 2 m, IEC-60320 C14 plug	axial fan 230 V_{AC}, 8 W, 90 m^3/h, height 25 mm, protective grille, plastic, black, flammability UL 94 V-0	for air barrier, with mains cable 230 V_{AC} (SCHUKO/UTE plug/ IEC 60320 C13 socket), adjustment range 0 ... 60°C	fully wired, 90 ... 264 V_{AC}, input SCHUKO/ UTE plug, outlet IEC 60320 C13 socket; external NTC sensor 1.5 m
No.	U	mm	mm	mm	1 piece assembled	1 piece assembled	PU 4 pieces assembled	1 piece assembled	1 piece assembled	1 piece assembled	1 piece assembled
1	20	998	600	600	22117-801	22117-806	20117-080	22117-821	20713-048	20118-750	60715-005
2	20	998	600	800	22117-802	22117-807		22117-822			
3	25	1220	600	600	22117-801	22117-806	20117-080	22117-821	20713-048	20118-750	60715-005
4	25	1220	600	800	22117-802	22117-807		22117-822			
5	29	1398	600	600	22117-801	22117-806	20117-080	22117-821	20713-048	20118-750	60715-005
6	29	1398	600	800	22117-802	22117-807		22117-822			
7	34	1620	600	600	22117-801	22117-806	20117-080	22117-821	20713-048	20118-750	60715-005
8	34	1620	600	800	22117-802	22117-807		22117-822			
9	34	1620	600	900	22117-803	22117-808		22117-823			
10	38	1798	600	600	22117-801	22117-806	20117-080	22117-821	20713-048	20118-750	60715-005
11	38	1798	600	800	22117-802	22117-807		22117-822			
12	38	1798	600	900	22117-803	22117-808		22117-823			
13	43	2020	600	600	22117-801	22117-806	20117-080	22117-821	20713-048	20118-750	60715-005
14	43	2020	600	800	22117-802	22117-807		22117-822			
15	43	2020	600	900	22117-803	22117-808		22117-823			
16	47	2198	600	600	22117-801	22117-806	20117-080	22117-821	20713-048	20118-750	60715-005
17	47	2198	600	800	22117-802	22117-807		22117-822			
18	47	2198	600	900	22117-803	22117-808		22117-823			

Cabinets – eurorack 19" ServicePLUS

eurorack 19" Raised top covers

Order Information

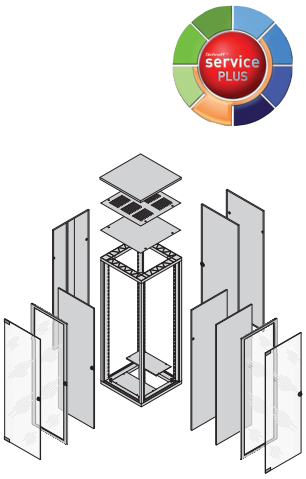

	Cabinet dimensions				Raised top cover		Fan for raised top cover				
	Height		Width	Depth	Raised	Lifting eyes	Fan tray without fan	Fan for fan tray		Thermostat	Speed control
					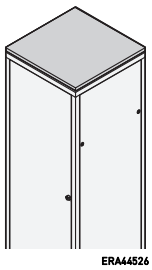 ERA44526	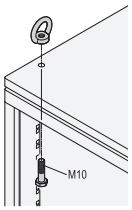 ERA44560	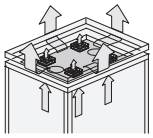 ertp0055	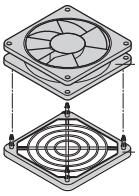 KTA44844	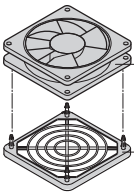 KTA44844	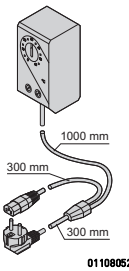 01108052	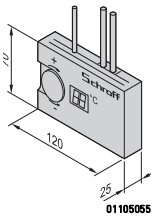 01105055
					St, 1.5 mm, RAL 7021, air gap all round 8 mm, IP 20	lifting eye for raised top cover, application and static load-carrying capacity in accordance with DIN 582	St, 1.5 mm, RAL 7021, all 6 openings closed with PE blank plugs, terminal clamp with connecting cable, 2 m, IEC-60320 C14 plug	axial fan 230 V_{AC}, 15 W, 162 m^3/h, height 38 mm, plastic, black, flammability UL 94 V-0	axial fan 230 V_{AC}, 8 W, 90 m^3/h, height 25 mm, plastic, black, flammability UL 94 V-0	for air barrier, with mains cable 230 V_{AC} (SCHUKO/UTE plug/IEC 60320 C13 socket), adjustment range 0 ... 60°C	fully wired, 90 ... 264 V_{AC}, input SCHUKO/ UTE plug, outlet IEC 60320 C13 socket; external NTC sensor 1.5 m
No.	U	mm	mm	mm	1 piece assembled	PU 4 pieces assembled	1 piece assembled	1 piece assembled	1 piece assembled	1 piece assembled	1 piece assembled
1	20	998	600	600	22117-811	**20150-011**	22117-821	**20713-243**	**20713-048**	**20118-750**	**60715-005**
2	20	998	600	800	22117-812		22117-822				
3	25	1220	600	600	22117-811	**20150-011**	22117-821	**20713-243**	**20713-048**	**20118-750**	**60715-005**
4	25	1220	600	800	22117-812		22117-822				
5	29	1398	600	600	22117-811	**20150-011**	22117-821	**20713-243**	**20713-048**	**20118-750**	**60715-005**
6	29	1398	600	800	22117-812		22117-822				
7	34	1620	600	600	22117-811	**20150-011**	22117-821	**20713-243**	**20713-048**	**20118-750**	**60715-005**
8	34	1620	600	800	22117-812		22117-822				
9	34	1620	600	900	22117-813		22117-823				
10	38	1798	600	600	22117-811	**20150-011**	22117-821	**20713-243**	**20713-048**	**20118-750**	**60715-005**
11	38	1798	600	800	22117-812		22117-822				
12	38	1798	600	900	22117-813		22117-823				
13	43	2020	600	600	22117-811	**20150-011**	22117-821	**20713-243**	**20713-048**	**20118-750**	**60715-005**
14	43	2020	600	800	22117-812		22117-822				
15	43	2020	600	900	22117-813		22117-823				
16	47	2198	600	600	22117-811	**20150-011**	22117-821	**20713-243**	**20713-048**	**20118-750**	**60715-005**
17	47	2198	600	800	22117-812		22117-822				
18	47	2198	600	900	22117-813		22117-823				

Order Information

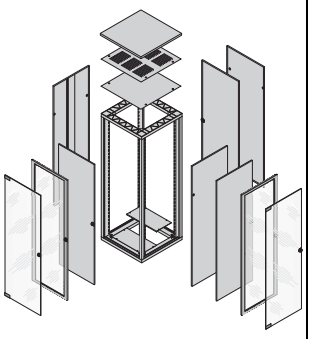

		Cabinet dimensions			Base plate	Fixed base/plinth , height 100 mm			
						Plain	With ventilation	Filter mat	Adjustable feet
					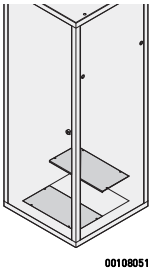 00108051	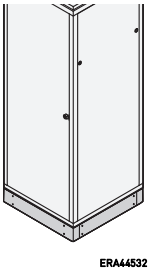 ERA44532	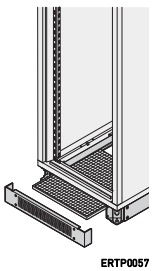 ERTP0057	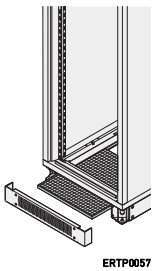 ERTP0057	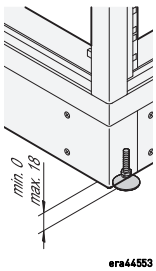 era44553
					St, 1.5 mm, RAL 7021, two parts, mounting on frame	base, Al die-cast, covers, St, 2.5 mm, RAL 7021	base/plinth, Al die-cast, covers, St, 2.5 mm, RAL 7021, front and rear with ventilation openings; please order filter mat separately	filter mat for fixed base/plinth, with ventilation	St, PA, black, load-carrying capacity 100 kg per foot
	Height		Width	Depth					
No.	U	mm	mm	mm	PU 2 pieces enclosed loose	1 piece assembled	1 piece assembled	PU 3 pieces enclosed loose	PU 4 pieces assembled
1	20	998	600	600	**22117-826**	**22117-830**	22117-864	**60114-514**	**21101-201**
2	20	998	600	800	**22117-827**	**22117-831**	22117-865	**60114-515**	
3	25	1220	600	600	**22117-826**	**22117-830**	22117-864	**60114-514**	**21101-201**
4	25	1220	600	800	**22117-827**	**22117-831**	**22117-865**	**60114-515**	
5	29	1398	600	600	**22117-826**	**22117-830**	22117-864	**60114-514**	**21101-201**
6	29	1398	600	800	**22117-827**	**22117-831**	**22117-865**	**60114-515**	
7	34	1620	600	600	**22117-826**	**22117-830**	22117-864	**60114-514**	**21101-201**
8	34	1620	600	800	**22117-827**	**22117-831**	**22117-865**	**60114-515**	
9	34	1620	600	900	22117-828	22117-832	22117-866	–	
10	38	1798	600	600	**22117-826**	**22117-830**	22117-864	**60114-514**	**21101-201**
11	38	1798	600	800	**22117-827**	**22117-831**	**22117-865**	**60114-515**	
12	38	1798	600	900	22117-828	22117-832	22117-866	–	
13	43	2020	600	600	**22117-826**	**22117-830**	22117-864	**60114-514**	**21101-201**
14	43	2020	600	800	**22117-827**	**22117-831**	**22117-865**	**60114-515**	
15	43	2020	600	900	22117-828	22117-832	22117-866	–	
16	47	2198	600	600	**22117-826**	**22117-830**	22117-864	**60114-514**	**21101-201**
17	47	2198	600	800	**22117-827**	**22117-831**	**22117-865**	**60114-515**	
18	47	2198	600	900	22117-828	22117-832	22117-866	–	

Cabinets – *eurorack* 19" ServicePLUS

eurorack 19" Third 19" plane, lateral cable ducting

Order Information

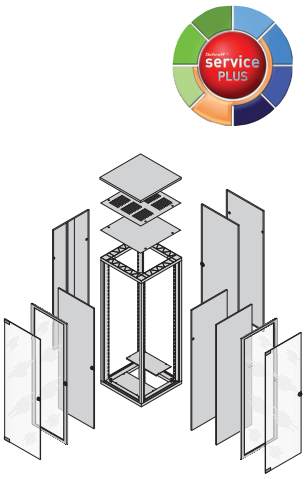

					19" panel/slide mount		Depth member	Lateral cable ducting			
					RAL 7021	AlZn	For 19" eurorack	Cable panel Width 150 mm		Cable panel Width 250 mm	
					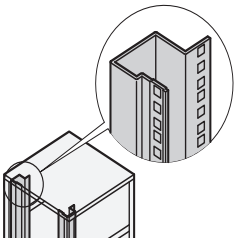 SZA45958		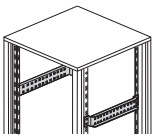 ertp0043	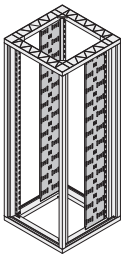 00108061		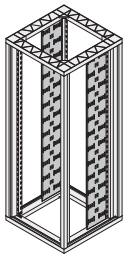 00108061	
					St, 1.5 mm, with 19" cut-outs; to mount a third 19" plane, 1 pair of 19" panel/slide mounts and 2 pairs of depth members are required		St, 1.5 mm, AlZn, for assembly of the third 19" plane or other components	St, 1 mm, RAL 7035, with cut-outs for cable ties or Velcro	St, 1 mm, RAL 7021, with cut-outs for cable ties or Velcro	St, 1 mm, RAL 7035, with cut-outs for cable ties or Velcro	St, 1 mm, RAL 7021, with cut-outs for cable ties or Velcro
	Cabinet dimensions				RAL 7021	AlZn	AlZn	RAL 7035	RAL 7021	RAL 7035	RAL 7021
	Height		Width	Depth	PU 2 pieces	PU 2 pieces	PU 2 pieces	PU 2 pieces	PU 2 pieces	PU 2 pieces	PU 2 pieces
No.	U	mm	mm	mm	assembled	assembled	assembled	assembled	assembled	assembled	assembled
1	20	998	600	600	23117-017	22117-352	**22117-376**	–	–	–	–
2	20	998	600	800			**22117-377**				
3	25	1220	600	600	23117-018	22117-353	**22117-376**	–	–	–	–
4	25	1220	600	800			**22117-377**				
5	29	1398	600	600	23117-019	22117-354	**22117-376**	–	–	–	–
6	29	1398	600	800			**22117-377**				
7	34	1620	600	600	22117-835	**22117-355**	**22117-376**	–	–	–	–
8	34	1620	600	800			**22117-377**				
9	34	1620	600	900			**22117-378**				
10	38	1798	600	600	22117-836	**22117-356**	**22117-376**	23117-026	23117-020	23117-029	**23117-023**
11	38	1798	600	800			**22117-377**				
12	38	1798	600	900			**22117-378**				
13	43	2020	600	600	22117-837	**22117-357**	**22117-376**	23117-027	**23117-021**	23117-030	**23117-024**
14	43	2020	600	800			**22117-377**				
15	43	2020	600	900			**22117-378**				
16	47	2198	600	600	22117-838	22117-358	**22117-376**	23117-028	**23117-022**	23117-031	**23117-025**
17	47	2198	600	800			**22117-377**				
18	47	2198	600	900			**22117-378**				

Order Information

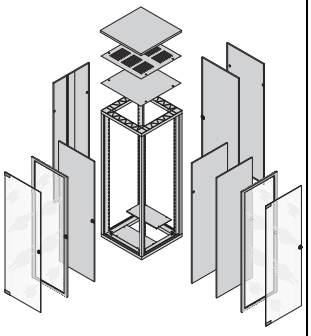

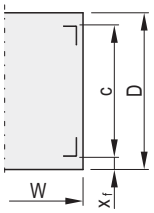

00205066

x_f = distance from front
c = pitch of 19" plane
D = cabinet depth
W = cabinet width

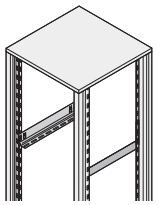

00108056

St, 1.5 mm, finish AlZn, static load-carrying capacity 25 kg/pair

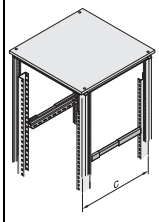

41003081

St, 1,5 mm, finish AlZn, static load-carrying capacity 40 kg/pair, depth-adjustable (c: 675 - 850 mm)

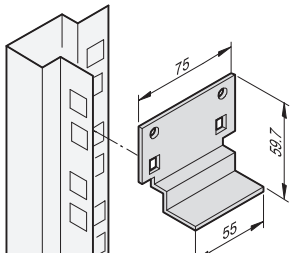

sc96xxxx

St, 1.5 mm, finish AlZn, static load-carrying capacity 15 kg/pair

No.	Cabinet dimensions Height U	Height mm	Width mm	Depth mm	x_f mm	c mm	Slide rail 25 kg PU 2 pieces enclosed loose	Slide rail 25 kg PU 10 pieces enclosed loose	Slide rail 40 kg, depth-adjustable PU 2 pieces enclosed loose	Short slide rail PU 2 pieces enclosed loose	Short slide rail PU 10 pieces enclosed loose
1	20	998	600	600	60	480	22127-094	21127-197	–	20118-592	20118-593
2	20	998	600	800	60	680	22127-095	21127-199	28127-001		
3	25	1220	600	600	60	480	22127-094	21127-197	–	20118-592	20118-593
4	25	1220	600	800	60	680	22127-095	21127-199	28127-001		
5	29	1398	600	600	60	480	22127-094	21127-197	–	20118-592	20118-593
6	29	1398	600	800	60	680	22127-095	21127-199	28127-001		
7	34	1620	600	600	60	480	22127-094	21127-197	–	20118-592	20118-593
8	34	1620	600	800	60	680	22127-095	21127-198	28127-001		
9	34	1620	600	900	60	780	22127-096	21127-199	28127-001		
10	38	1798	600	600	60	480	22127-094	21127-197	–	20118-592	20118-593
11	38	1798	600	800	60	680	22127-095	21127-198	28127-001		
12	38	1798	600	900	60	780	22127-096	21127-199	28127-001		
13	43	2020	600	600	60	480	22127-094	21127-197	–	20118-592	20118-593
14	43	2020	600	800	60	680	22127-095	21127-198	28127-001		
15	43	2020	600	900	60	780	22127-096	21127-199	28127-001		
16	47	2198	600	600	60	480	22127-094	21127-197	–	20118-592	20118-593
17	47	2198	600	800	60	680	22127-095	21127-198	28127-001		
18	47	2198	600	900	60	780	22127-096	21127-199	28127-001		

Cabinets – eurorack 19" ServicePLUS

eurorack 19" 19" fixed or telescopic shelves

Order Information

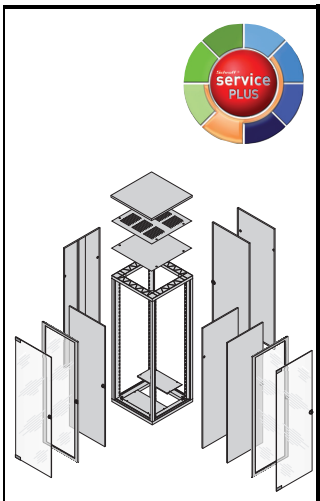

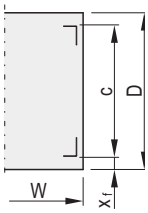

00205066

x_f = distance from front c = pitch of 19" plane
D = cabinet depth
W = cabinet width

Fixed shelf, 1 U, 75 kg

Full depth

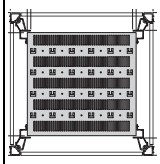

00105050

St, 1.5 mm, RAL 7021, with perforation, static load-carrying capacity 75 kg, incl. GND/ earthing

Recessed by c - 100 mm

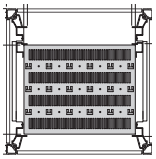

00105051

St, 1.5 mm, RAL 7021, with perforation, static load-carrying capacity 75 kg, incl. GND/ earthing, third 19" plane necessary, please order separately

Shelf, telescopic, 2 U, 70 kg

Full depth

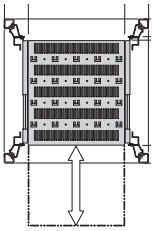

00105069

Shortened by 100 mm

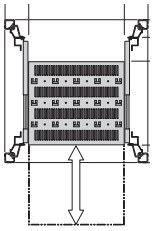

00105070

St, 1.5 mm, staic load-carrying capacity 70 kg, incl. telescopic slide; please order T-bar lock and GND/ earthing separately

T-bar lock

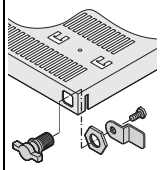

01004125

to lock the telescopic shelf

GND/earthing

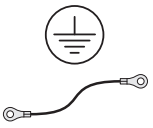

05904052

for telescopic shelf

	Cabinet dimensions											
	Height		Width	Depth	x_f	c	1 piece	1 piece	1 piece	1 piece	1 piece	PU 1 kit
No.	U	mm	mm	mm	mm	mm	assembled	assembled	assembled	assembled	assembled	assembled
1	20	998	600	600	60	480	**22117-842**	22117-845	**21130-353**	**21130-352**	**23130-092**	**21120-189**
2	20	998	600	800	60	680	**22117-843**	**22117-871**	**21130-355**	**21130-354**	**23130-092**	**21120-189**
3	25	1220	600	600	60	480	**22117-842**	22117-845	**21130-353**	**21130-352**	**23130-092**	**21120-189**
4	25	1220	600	800	60	680	**22117-843**	**22117-871**	**21130-355**	**21130-354**	**23130-092**	**21120-189**
5	29	1398	600	600	60	480	**22117-842**	22117-845	**21130-353**	**21130-352**	**23130-092**	**21120-189**
6	29	1398	600	800	60	680	**22117-843**	**22117-871**	**21130-355**	**21130-354**	**23130-092**	**21120-189**
7	34	1620	600	600	60	480	**22117-842**	22117-845	**21130-353**	**21130-352**	**23130-092**	**21120-189**
8	34	1620	600	800	60	680	**22117-843**	**22117-871**	**21130-355**	**21130-354**	**23130-092**	**21120-189**
9	34	1620	600	900	60	780	22117-844	**22117-843**	–	–	–	–
10	38	1798	600	600	60	480	**22117-842**	22117-845	**21130-353**	**21130-352**	**23130-092**	**21120-189**
11	38	1798	600	800	60	680	**22117-843**	**22117-871**	**21130-355**	**21130-354**	**23130-092**	**21120-189**
12	38	1798	600	900	60	780	22117-844	**22117-843**	–	–	–	–
13	43	2020	600	600	60	480	**22117-842**	22117-845	**21130-353**	**21130-352**	**23130-092**	**21120-189**
14	43	2020	600	800	60	680	**22117-843**	**22117-871**	**21130-355**	**21130-354**	**23130-092**	**21120-189**
15	43	2020	600	900	60	780	22117-844	**22117-843**	–	–	–	–
16	47	2198	600	600	60	480	**22117-842**	22117-845	**21130-353**	**21130-352**	**23130-092**	**21120-189**
17	47	2198	600	800	60	680	**22117-843**	**22117-871**	**21130-355**	**21130-354**	**23130-092**	**21120-189**
18	47	2198	600	900	60	780	22117-844	**22117-843**	–	–	–	–

Cabinets – eurorack Universal ServicePLUS

configuration

Simple. Fast. To the ideal product.

Components can be varied and combined freely

- Configuration tables from page 1.301
- Online configuration: www.schroff.co.uk/configuration

assembly

Assembled by professionals. Double benefit!

Assembly of all mechanical, electrical and electronic components by our specialists

- Without extra cost
- Ready for despatch within 10 working days

modification

Small changes. Large impact.

Custom drillings, cut-outs and special colours for off-the-shelf products

- Download CAD data and send back with modifications
- Ready for despatch within 15 working days

solution

Simple. Fast. From one source.

Integration and custom developments

- Climate control, complete assembly, cabling (power supply), function test
- Special sizes, customised solutions

academy

Knowledge. Sharing. Partnerships.

Knowledge transfer and partnership

- Seminars, white papers, CAD drawings, test reports, user reports

lifecycle

We are with you. For the entire product life.

Flexible support throughout the product lifecycle

- Delivery to point of use, installation service, exchange service, maintenance, repair, replacement parts, recycling

Cabinets – *eurorack* Universal ServicePLUS

eurorack Universal ServicePLUS: configuration and assembly

- Dimensions:
  - Height: 20 ... 47 U (998 ... 2198 mm)
  - Width: 600, 800 mm
  - Depth: 600, 800, 900 mm
- Colours:
  - Frame, top cover and plinth in black grey (RAL 7021);
  - Side panels and doors in light grey (RAL 7035) or black grey (RAL 7021)
- Build your cabinet out of individual components (please suffix each part number with /05)
- Once you have selected the desired cabinet dimensions, the row number (first column of the configuration tables) will guide you through all subsequent configuration pages that apply to these dimensions (see example below)
- The cabinet is assembled by us and ready for despatch within 10 working days

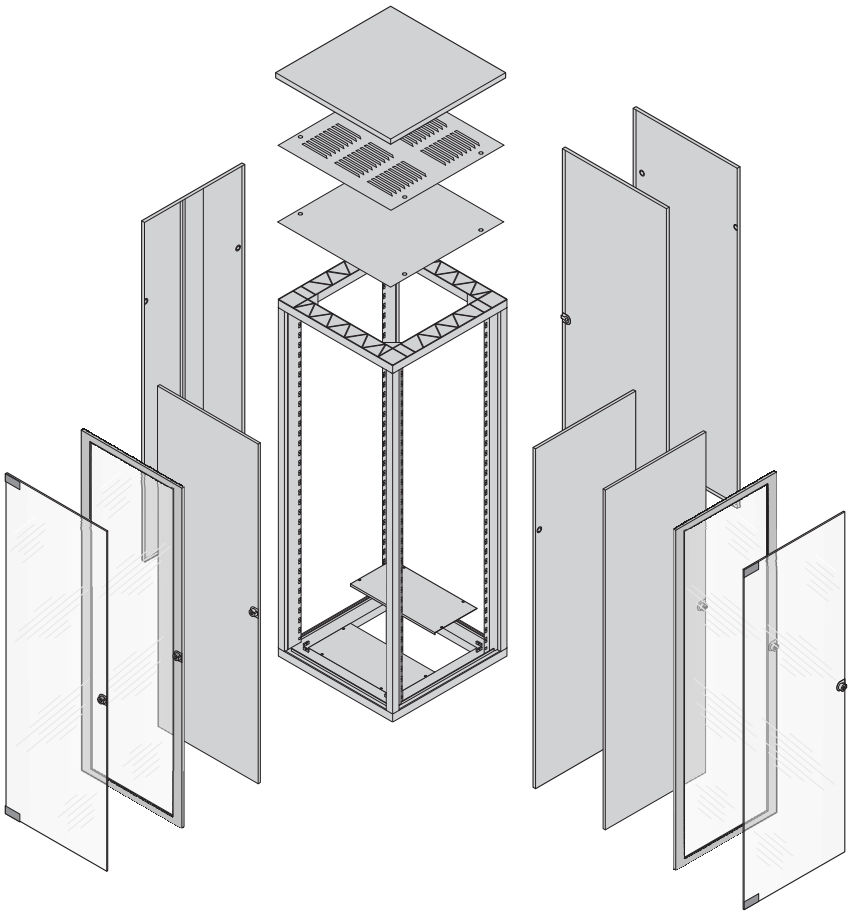

00101534

Example configuration (here: row 17)

Qty	Description	Order no.
1	Universal frame, RAL 7021, height 2020 mm, width 600 mm, depth 900 mm, 1 piece	22117-792/05
1	Adjustable foot, PU 4 pieces	21101-201/05
2	Lateral steel door, opening angle 120°, RAL 7035, 1 piece	21117-190/05
2	Front, rear glass door, RAL 7035, opening angle 180°, 1 piece	22117-229/05
1	DIN profile half cylinder, 1 piece	60114-121/05
..	.....	.....

	Page
Frames, side-by-side mounting kit, GND/ earthing, adjustable feet, castors	1.302
Doors	1.303
Door hinge bracket, cable ducting	1.305
Flush top covers	1.306
Raised top covers	1.307
Base plates, plinths	1.308
19" panel/slide mounts	1.309
19" slide rails	1.311
Fixed 19" shelves	1.312
Telescopic 19" shelves	1.313
Fixed shelves on Universal cabinet uprights	1.314
Telescopic shelves on Universal cabinet uprights	1.315
Dimensions Universal frame	1.275

Cabinets – *eurorack* Universal ServicePLUS

eurorack Universal — Frames, side-by-side mounting kit, GND/earthing, adjustable feet, castors

Order Information

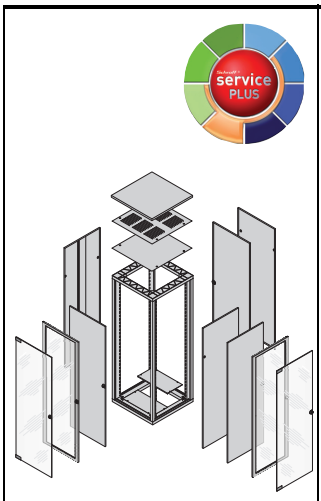

	Cabinet dimensions				Universal frame (without 19" plane)	Side-by-side mounting kit	GND/earthing	Adjustable feet	Castors	
									Load-carrying capacity 180 kg per kit	Load-carrying capacity 300 kg per kit
					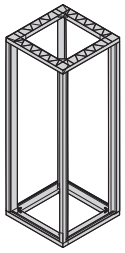 era44489	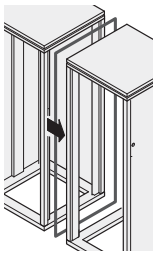 ERTP0070	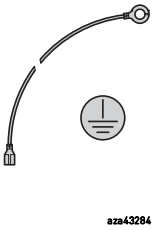 aza43284	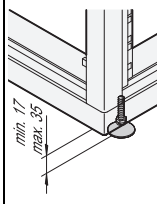 era44553	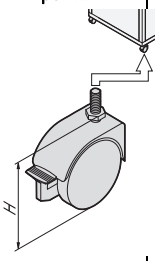	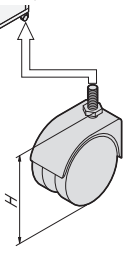 era44556
					Universal frame, rack Al die-cast, uprights Al extrusion, 19" plane can be built in 25 mm increments with depth members and depth-adjustable 19" panel/slide mounts	serves to screw together two cabinets	for frame, door, side panel, top cover, base plate	St, PA, black, load-carrying capacity 100 kg per foot	assembly directly onto frame, height H = 93 mm, 2 locking, 2 non-locking castors	assembly directly onto frame, height H = 110 mm, 2 locking, 2 non-locking castors
No.	Height U	Height mm	Width mm	Depth mm	1 piece assembled	1 piece supplied loose	PU 1 kit assembled	PU 4 pieces assembled	PU 4 pieces enclosed loose	PU 4 pieces enclosed loose
1	20	998	600	600	22117-985	20117-515	21101-539	21101-201	20117-757	20117-024
2	20	998	600	800	22117-986					
3	25	1220	600	600	22117-987	20117-515	21101-539	21101-201	20117-757	20117-024
4	25	1220	600	800	22117-988					
5	29	1398	600	600	22117-989	20117-515	21101-539	21101-201	20117-757	20117-024
6	29	1398	600	800	22117-990					
7	34	1620	600	600	22117-782	20117-515	21101-539	21101-201	20117-757	20117-024
8	34	1620	600	800	22117-783					
9	34	1620	600	900	22117-784					
10	38	1798	600	600	22117-985	20117-515	21101-539	21101-201	20117-757	20117-024
11	38	1798	600	800	22117-986					
12	38	1798	600	900	22117-787					
13	38	1798	800	600	22117-788	20117-515	21101-539	21101-201	20117-757	20117-024
14	38	1798	800	800	22117-789					
15	43	2020	600	600	22117-790	20117-515	21101-539	21101-201	20117-757	20117-024
16	43	2020	600	800	22117-791					
17	43	2020	600	900	22117-792					
18	43	2020	800	600	22117-793	20117-515	21101-539	21101-201	20117-757	20117-024
19	43	2020	800	800	22117-794					
20	47	2198	600	600	22117-991	20117-515	21101-539	21101-201	20117-757	20117-024
21	47	2198	600	800	22117-796					
22	47	2198	600	900	22117-992					
23	47	2198	800	800	22117-797	20117-515	21101-539	21101-201	20117-757	20117-024

Frame dimensions, see page 1.275

Cabinets – *eurorack* Universal ServicePLUS

eurorack Universal Side panels, glass doors

Order Information

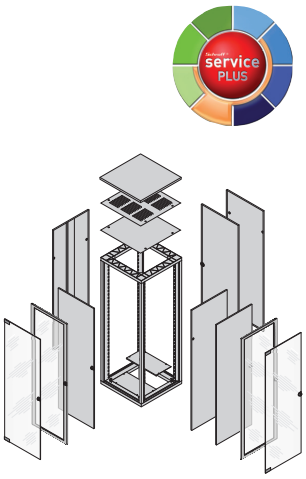

	Cabinet dimensions				Side panel with side-panel catches		Side panel with safety lock		Glass door	Glass door	
									Opening angle 120°	Opening angle 180°	DIN profile half cylinder
					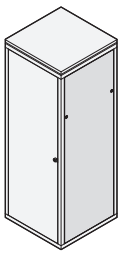 ERA44517		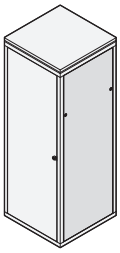 ERA44517		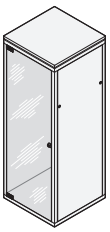 mra45967	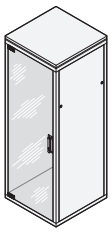 00101506	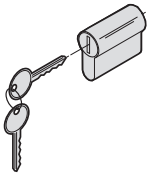 SZA44484
					St, 1 mm, RAL 7035, 2 side panel catches; instead of a side panel, doors can also be mounted laterally	St, 1 mm, RAL 7021, 2 side panel catches; instead of a side panel, doors can also be mounted laterally	St, 1 mm, RAL 7035, 2 safety locks; instead of a side panel, doors can also be mounted laterally	St, 1 mm, RAL 7021, 2 safety locks; instead of a side panel, doors can also be mounted laterally	glazing smoke grey, Sekurit, 6 mm, safety lock with 2 keys	glazing smoke grey, Sekurit, 6 mm, lever handle (incl. blank insert)	DIN profile half cylinder for lever handle
					RAL 7035	RAL 7021	RAL 7035	RAL 7021			
	Height		Width	Depth	PU 2 pieces	PU 2 pieces	PU 2 pieces	PU 2 pieces	1 piece	1 piece	1 piece
No.	U	mm	mm	mm	assembled	assembled	assembled	assembled	assembled	assembled	assembled
1	20	998	600	600	21117-158	22117-993	–	–	**20117-745**	–	–
2	20	998	600	800	21117-167	22117-994					
3	25	1220	600	600	21117-159	22117-995	–	–	**20117-746**	–	–
4	25	1220	600	800	21117-168	22117-996					
5	29	1398	600	600	21117-160	22117-997	22117-185	23117-002	20117-747	22117-239	**60114-121**
6	29	1398	600	800	21117-169	22117-998	22117-186	23117-003			
7	34	1620	600	600	21117-161	22117-958	22117-173	23117-004	**20117-748**	22117-227	**60114-121**
8	34	1620	600	800	21117-170	22117-959	22117-177	23117-005			
9	34	1620	600	900	21117-179	22117-960	22117-181	23117-006			
10	38	1798	600	600	21117-162	22117-961	22117-174	23117-007	**20117-749**	22117-228	**60114-121**
11	38	1798	600	800	21117-171	22117-962	22117-178	23117-008			
12	38	1798	600	900	21117-180	22117-963	22117-182	23117-009			
13	38	1798	800	600	21117-162	22117-961	22117-174	23117-007	20117-754	22117-236	**60114-121**
14	38	1798	800	800	21117-171	22117-962	22117-178	23117-008			
15	43	2020	600	600	21117-163	22117-964	22117-175	22117-968	**20117-751**	22117-229	**60114-121**
16	43	2020	600	800	21117-172	22117-965	22117-179	22117-969			
17	43	2020	600	900	21117-181	22117-966	22117-592	22117-970			
18	43	2020	800	600	21117-163	22117-964	22117-175	22117-968	20117-753	22117-237	**60114-121**
19	43	2020	800	800	21117-172	22117-965	22117-179	22117-969			
20	47	2198	600	600	21117-164	22117-999	22117-176	23117-010	20117-752	22117-230	**60114-121**
21	47	2198	600	800	21117-173	22117-967	22117-180	22117-971			
22	47	2198	600	900	21117-182	23117-001	22117-593	22117-972			
23	47	2198	800	800	21117-173	22117-967	22117-180	22117-971	20117-756	22117-238	**60114-121**

Note: Doors can also be assembled laterally, in place of side panels

Order Information

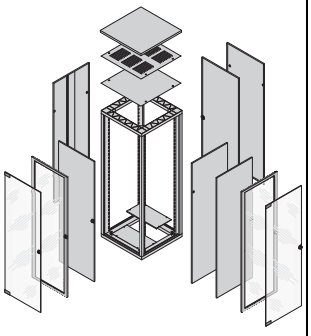

	Cabinet dimensions				Glazed acrylic glass door		Steel door		Steel door		
					Opening angle 120°		Opening angle 120°		Opening angle 180°		DIN profile half cylinder
					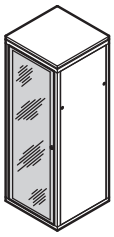 a4491b		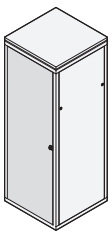 00101506		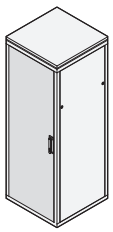 00101504		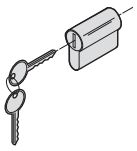 SZA44484
	Height		Width	Depth	frame, Al, 2 mm, RAL 7035; acrylic glass, 2 mm, safety lock with 2 keys	frame, Al, 2 mm, RAL 7021, acrylic glass, 2 mm, safety lock with 2 keys	St, 1 mm, RAL 7035, safety lock with 2 keys	St, 1 mm, RAL 7021, safety lock with 2 keys	St, 1 mm, RAL 7035, lever handle (incl. blank insert), please order DIN profile half cylinder separately	St, 1 mm, RAL 7021, lever handle (incl. blank insert), please order DIN profile half cylinder separately	DIN profile half cylinder for lever handle
					RAL 7035	RAL 7021	RAL 7035	RAL 7021	RAL 7035	RAL 7021	
No.	U	mm	mm	mm	1 piece assembled	1 piece assembled	1 piece assembled	1 piece assembled	1 piece assembled	1 piece assembled	1 piece assembled
1	20	998	600	600	20117-770	22117-944	21117-185	22117-935	–	–	–
2	20	998	600	800							
3	25	1220	600	600	20117-771	22117-945	21117-186	22117-936	–	–	–
4	25	1220	600	800							
5	29	1398	600	600	20117-772	23117-011	21117-187	23117-012	22117-201	23117-013	60114-121
6	29	1398	600	800							
7	34	1620	600	600	20117-765	22117-946	21117-188	22117-937	22117-189	23117-014	60114-121
8	34	1620	600	800							
9	34	1620	600	900							
10	38	1798	600	600	20117-766	22117-947	21117-189	22117-938	22117-190	23117-015	60114-121
11	38	1798	600	800							
12	38	1798	600	900							
13	38	1798	800	600	20117-775	22117-948	21117-198	22117-939	22117-198	23117-016	60114-121
14	38	1798	800	800							
15	43	2020	600	600	20117-767	22117-949	21117-190	22117-940	22117-191	22117-973	60114-121
16	43	2020	600	800							
17	43	2020	600	900							
18	43	2020	800	600	20117-776	22117-950	21117-199	22117-941	22117-199	22117-974	60114-121
19	43	2020	800	800							
20	47	2198	600	600	20117-768	22117-951	21117-191	22117-942	22117-192	22117-975	60114-121
21	47	2198	600	800							
22	47	2198	600	900							
23	47	2198	800	800	20117-777	22117-952	21117-200	22117-957	22117-200	22117-976	60114-121

Cabinets – *eurorack* Universal ServicePLUS

eurorack Universal — Door hinge bracket, cable ducting

Order Information

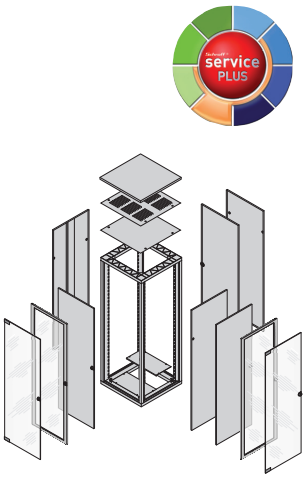

	Cabinet dimensions				Door hinge bracket for Universal frame	Cable ducting frame	
	Height		Width	Depth		3 U	4 U
No.	U	mm	mm	mm	1 piece assembled	1 piece assembled	1 piece assembled
1	20	998	600	600	22117-799	20118-796	20118-797
2	20	998	600	800			
3	25	1220	600	600	22117-799	20118-796	20118-797
4	25	1220	600	800			
5	29	1398	600	600	22117-799	20118-796	20118-797
6	29	1398	600	800			
7	34	1620	600	600	22117-799	20118-796	20118-797
8	34	1620	600	800			
9	34	1620	600	900			
10	38	1798	600	600	22117-799	20118-796	20118-797
11	38	1798	600	800			
12	38	1798	600	900			
13	38	1798	800	600	–	–	–
14	38	1798	800	800			
15	43	2020	600	600	22117-799	20118-796	20118-797
16	43	2020	600	800			
17	43	2020	600	900			
18	43	2020	800	600	–	–	–
19	43	2020	800	800			
20	47	2198	600	600	22117-799	20118-796	20118-797
21	47	2198	600	800			
22	47	2198	600	900			
23	47	2198	800	800	–	–	–

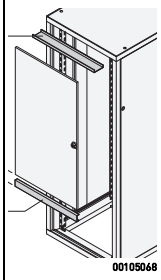

St, 1.5 mm, RAL 7021, assembly above or below shortened door, 1 U assembly area, please order 19" panel/ slide mount and cable ducting plate separately

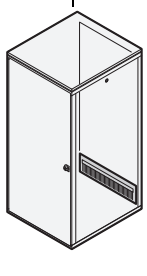

St, 2.5 mm, RAL 7021, with black brush strip for short doors or rear panels

Order Information

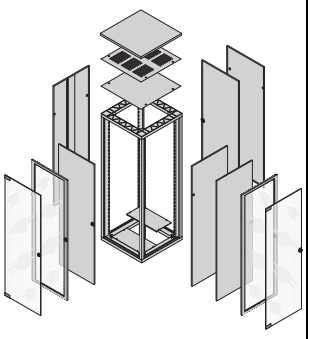

		Cabinet dimensions			Flush top cover			Top cover fan for flush louvered top cover			
		Height		Width	Depth	Plain	Louvered	Lifting eyes	Fan tray without fan	Fan for fan tray	Thermostat	Speed control
						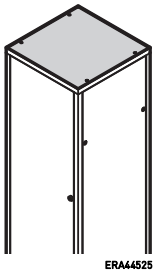 ERA44525	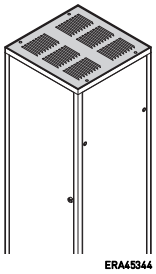 ERA45344	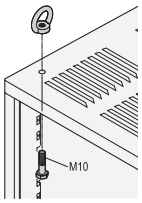 ERA44560	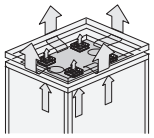 ertp0055	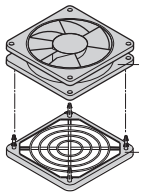 KTA44844	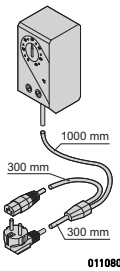 01108052	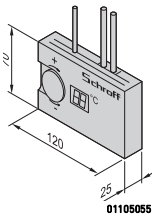 01105055
						St, 1 mm, RAL 7021	St, 1 mm, RAL 7030	lifting eye for flush cover, application and static load-carrying capacity in accordance with DIN 582	St, 1.5 mm, RAL 7021, all 6 openings closed with PE blank plugs, terminal clamp with connecting cable, 2 m, IEC 60320 C14 plug	axial fan 230 V_{AC}, 8 W, 90 m^3/h, height 25 mm, protective grille, plastic, black, flammability UL 94 V-0	for fan tray, with mains cable 230 V_{AC} (SCHUKO/UTE plug/IEC 60320 C13 socket), adjustment range 0 ... 60 °C	fully wired, 90 ... 264 V_{AC}, input SCHUKO/UTE plug, outlet IEC 60320 C13 socket; external NTC sensor 1.5 m
No.	U	mm	mm	mm	1 piece assembled	1 piece assembled	PU 4 pieces assembled	1 piece assembled	1 piece assembled	1 piece assembled	1 piece assembled	
1	20	998	600	600	22117-801	22117-806	20117-080	22117-821	20713-048	20118-750	60715-005	
2	20	998	600	800	22117-802	22117-807		22117-822				
3	25	1220	600	600	22117-801	22117-806	20117-080	22117-821	20713-048	20118-750	60715-005	
4	25	1220	600	800	22117-802	22117-807		22117-822				
5	29	1398	600	600	22117-801	22117-806	20117-080	22117-821	20713-048	20118-750	60715-005	
6	29	1398	600	800	22117-802	22117-807		22117-822				
7	34	1620	600	600	22117-801	22117-806	20117-080	22117-821	20713-048	20118-750	60715-005	
8	34	1620	600	800	22117-802	22117-807		22117-822				
9	34	1620	600	900	22117-803	22117-808		22117-823				
10	38	1798	600	600	22117-801	22117-806	20117-080	22117-821	20713-048	20118-750	60715-005	
11	38	1798	600	800	22117-802	22117-807		22117-822				
12	38	1798	600	900	22117-803	22117-808		22117-823				
13	38	1798	800	600	22117-802	22117-807	20117-080	22117-824	20713-048	20118-750	60715-005	
14	38	1798	800	800	22117-804	22117-809		22117-825				
15	43	2020	600	600	22117-801	22117-806	20117-080	22117-821	20713-048	20118-750	60715-005	
16	43	2020	600	800	22117-802	22117-807		22117-822				
17	43	2020	600	900	22117-803	22117-808		22117-823				
18	43	2020	800	600	22117-802	22117-807	20117-080	22117-824	20713-048	20118-750	60715-005	
19	43	2020	800	800	22117-804	22117-809		22117-825				
20	47	2198	600	600	22117-801	22117-806	20117-080	22117-821	20713-048	20118-750	60715-005	
21	47	2198	600	800	22117-802	22117-807		22117-822				
22	47	2198	600	900	22117-803	22117-808		22117-823				
23	47	2198	800	800	22117-804	22117-809	20117-080	22117-825	20713-048	20118-750	60715-005	

Cabinets – *eurorack* Universal ServicePLUS

eurorack Universal — Raised top covers

Order Information

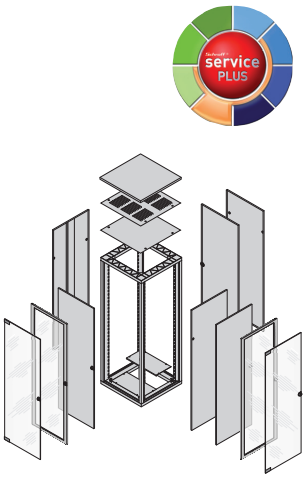

	Cabinet dimensions				Raised top cover		Fan for raised top cover				
	Height		Width	Depth	Raised	Lifting eyes	Fan tray without fan	Fan for fan tray		Thermostat	Speed control
					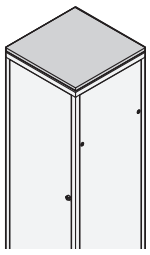 ERA44526	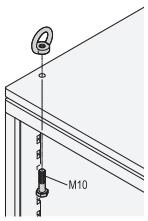 ERA44560	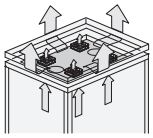 ertp0055	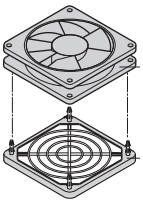 KTA44844		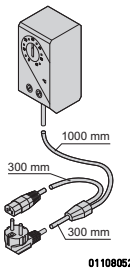 01108052	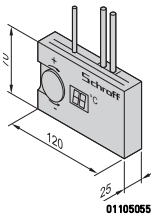 01105055
					St, 1.5 mm, RAL 7021, air gap all round 8 mm, IP 20	lifting eye for raised top cover, application and static load-carrying capacity in accordance with DIN 582	St, 1.5 mm, RAL 7021, all 6 openings closed with PE blank plugs, terminal clamp with connecting cable, 2 m, IEC-60320 C14 plug	axial fan 230 V_{AC}, 15 W, 162 m^3/h, height 38 mm, protective grille, plastic, black, flammability UL 94 V-0	axial fan 230 V_{AC}, 8 W, 90 m^3/h, height 25 mm, protective grille, plastic, black, flammability UL 94 V-0	for fan tray, with mains cable 230 V_{AC} (SCHUKO/UTE plug/IEC 60320 C13 socket), adjustment range 0 ... 60°C	fully wired, 90 ... 264 V_{AC}, input SCHUKO/UTE plug, outlet IEC 60320 C13 socket; external NTC sensor 1.5 m
No.	U	mm	mm	mm	1 piece assembled	PU 4 pieces assembled	1 piece assembled	1 piece assembled	1 piece assembled	1 piece assembled	1 piece assembled
1	20	998	600	600	22117-811	**20150-011**	22117-821	**20713-243**	**20713-048**	**20118-750**	**60715-005**
2	20	998	600	800	22117-812		22117-822				
3	25	1220	600	600	22117-811	**20150-011**	22117-821	**20713-243**	**20713-048**	**20118-750**	**60715-005**
4	25	1220	600	800	22117-812		22117-822				
5	29	1398	600	600	22117-811	**20150-011**	22117-821	**20713-243**	**20713-048**	**20118-750**	**60715-005**
6	29	1398	600	800	22117-812		22117-822				
7	34	1620	600	600	22117-811	**20150-011**	22117-821	**20713-243**	**20713-048**	**20118-750**	**60715-005**
8	34	1620	600	800	22117-812		22117-822				
9	34	1620	600	900	22117-813		22117-823				
10	38	1798	600	600	22117-811	**20150-011**	22117-821	**20713-243**	**20713-048**	**20118-750**	**60715-005**
11	38	1798	600	800	22117-812		22117-822				
12	38	1798	600	900	22117-813		22117-823				
13	38	1798	800	600	22117-812	**20150-011**	22117-824	**20713-243**	**20713-048**	**20118-750**	**60715-005**
14	38	1798	800	800	22117-814		22117-825				
15	43	2020	600	600	22117-811	**20150-011**	22117-821	**20713-243**	**20713-048**	**20118-750**	**60715-005**
16	43	2020	600	800	22117-812		22117-822				
17	43	2020	600	900	22117-813		22117-823				
18	43	2020	800	600	22117-812	**20150-011**	22117-824	**20713-243**	**20713-048**	**20118-750**	**60715-005**
19	43	2020	800	800	22117-814		22117-825				
20	47	2198	600	600	22117-811	**20150-011**	22117-821	**20713-243**	**20713-048**	**20118-750**	**60715-005**
21	47	2198	600	800	22117-812		22117-824				
22	47	2198	600	900	22117-813		22117-823				
23	47	2198	800	800	22117-814	**20150-011**	22117-825	**20713-243**	**20713-048**	**20118-750**	**60715-005**

Order Information

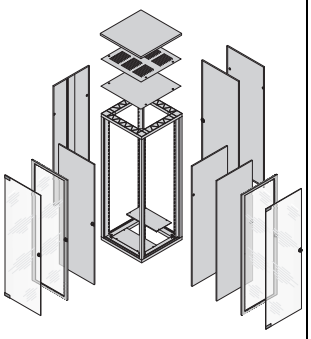

	Cabinet dimensions				Base plate	Fixed base/plinth , height 100 mm				Mobile base/plinth	
						Plain	With ventilation	Filter mat	Adjustable feet	Base/plinth	Jacking foot
	Height		Width	Depth							
No.	U	mm	mm	mm	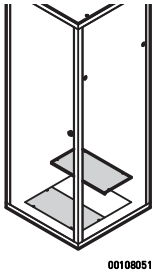 00108051	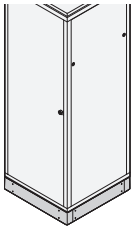 ERA44532	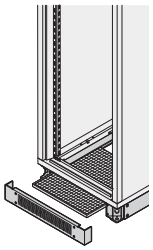 ERTP0057	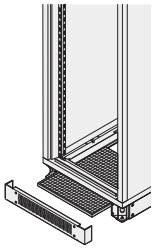 ERTP0057	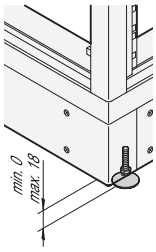 era44553	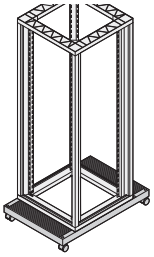 era45323	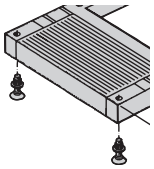 ERA44532
					St, 1.5 mm, RAL 7021, two parts, mounting on frame	base/plinth, Al die-cast, covers, St, 2.5 mm, RAL 7021	base/plinth, Al die-cast, covers, St, 2.5 mm, RAL 7021, front and rear with ventilation openings	filter mat for fixed base/plinth, with ventilation	St, PA, black, load-carrying capacity 100 kg per foot	Al die-cast, RAL 7021, static load-carrying capacity 300 kg, with rubber mat, 4 castors, PA	for mobile base, mounted below front, adjustment from above
					PU 2 pieces enclosed loose	1 piece assembled	1 piece assembled	PU 3 pieces enclosed loose	PU 4 pieces assembled	1 piece assembled	PU 2 pieces assembled
1	20	998	600	600	**22117-826**	**22117-830**	22117-864	**60114-514**	**21101-201**	**22117-869**	**20117-503**
2	20	998	600	800	**22117-827**	**22117-831**	**22117-865**	**60114-515**			
3	25	1220	600	600	**22117-826**	**22117-830**	22117-864	**60114-514**	**21101-201**	**22117-869**	**20117-503**
4	25	1220	600	800	**22117-827**	**22117-831**	**22117-865**	**60114-515**			
5	29	1398	600	600	**22117-826**	**22117-830**	22117-864	**60114-514**	**21101-201**	**22117-869**	**20117-503**
6	29	1398	600	800	**22117-827**	**22117-831**	**22117-865**	**60114-515**			
7	34	1620	600	600	**22117-826**	**22117-830**	22117-864	**60114-514**	**21101-201**	**22117-869**	**20117-503**
8	34	1620	600	800	**22117-827**	**22117-831**	**22117-865**	**60114-515**	**21101-201**	**22117-869**	**20117-503**
9	34	1620	600	900	22117-828	22117-832	22117-866	–	**21101-201**	–	–
10	38	1798	600	600	**22117-826**	**22117-830**	22117-864	**60114-514**	**21101-201**	**22117-869**	**20117-503**
11	38	1798	600	800	**22117-827**	**22117-831**	**22117-865**	**60114-515**	**21101-201**	**22117-869**	**20117-503**
12	38	1798	600	900	22117-828	22117-832	22117-866	–	**21101-201**	–	–
13	38	1798	800	600	**22117-827**	22117-833	22117-867	**60114-517**	**21101-201**	–	–
14	38	1798	800	800	22117-829	22117-834	22117-868	**60114-518**			
15	43	2020	600	600	**22117-826**	**22117-830**	22117-864	**60114-514**	**21101-201**	**22117-869**	**20117-503**
16	43	2020	600	800	**22117-827**	**22117-831**	**22117-865**	**60114-515**	**21101-201**	**22117-869**	**20117-503**
17	43	2020	600	900	22117-828	22117-832	22117-866	–	**21101-201**	–	–
18	43	2020	800	600	**22117-827**	22117-833	22117-867	**60114-517**	**21101-201**	–	–
19	43	2020	800	800	22117-829	22117-834	22117-868	**60114-518**			
20	47	2198	600	600	**22117-827**	**22117-830**	22117-864	**60114-514**	**21101-201**	**22117-869**	**20117-503**
21	47	2198	600	800	22117-829	**22117-831**	**22117-865**	**60114-515**	**21101-201**	**22117-869**	**20117-503**
22	47	2198	600	900	**22117-827**	22117-832	22117-866	–	**21101-201**	–	–
23	47	2198	800	800	22117-829	22117-834	22117-868	**60114-518**	**21101-201**	–	–

Cabinets – eurorack Universal ServicePLUS

eurorack Universal 19" panel/slide mounts

Order Information

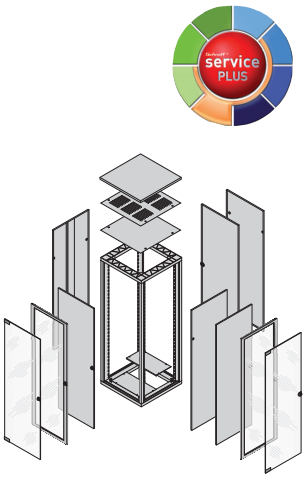

					19" panel/slide mount		Depth member for 600 mm width	Reduced width depth member for 800 mm width
					RAL 7021	AlZn		
					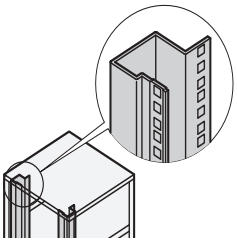 SZA45958		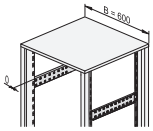 ERTP0045	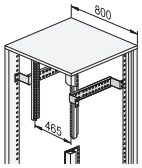 ertp0044
					St, 1.5 mm, for depth-adjustable fitting: cabinet depth 600 mm: please order depth members, cabinet depth 800 mm: please order reduced-width depth members		St, 1.5 mm, AlZn	St, 2.5 mm, zinc-plated, RAL 7021, 19" plane at least 110 mm from front edge of cabinet; please order panel/slide mounts (2 pairs) separately
	Cabinet dimensions				RAL 7021	AlZn	AlZn	RAL 7021
	Height		Width	Depth	PU 2 pieces	PU 2 pieces	PU 2 pieces	PU 2 pieces
No.	U	mm	mm	mm	assembled	assembled	assembled	assembled
1	20	998	600	600	23117-017	22117-352	**22117-389**	–
2	20	998	600	800			**22117-390**	
3	25	1220	600	600	23117-018	22117-353	**22117-389**	–
4	25	1220	600	800			**22117-390**	
5	29	1398	600	600	23117-019	22117-354	**22117-389**	–
6	29	1398	600	800			**22117-390**	
7	34	1620	600	600	22117-835	**22117-355**	**22117-389**	–
8	34	1620	600	800			**22117-390**	
9	34	1620	600	900			22117-391	
10	38	1798	600	600	22117-836	**22117-356**	**22117-389**	–
11	38	1798	600	800			**22117-390**	
12	38	1798	600	900			22117-391	
13	38	1798	800	600	22117-836	**22117-356**	–	22117-839
14	38	1798	800	800				22117-840
15	43	2020	600	600	22117-837	**22117-357**	**22117-389**	–
16	43	2020	600	800			**22117-390**	
17	43	2020	600	900			22117-391	
18	43	2020	800	600	22117-837	**22117-357**	–	22117-839
19	43	2020	800	800				22117-840
20	47	2198	600	600	22117-838	22117-358	**22117-389**	–
21	47	2198	600	800			**22117-390**	
22	47	2198	600	900			22117-391	
23	47	2198	800	800	22117-838	22117-358	–	22117-840

Order Information

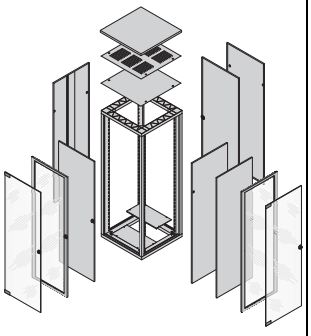

					Lateral cable ducting			
					Cable panel Width 150 mm		Cable panel Width 250 mm	
					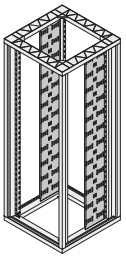 00108061		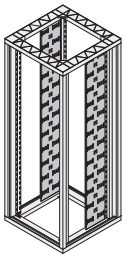 00108061	
					St, 1 mm, RAL 7035, with cut-outs for cable ties or Velcro	St, 1 mm, RAL 7021, with cut-outs for cable ties or Velcro	St, 1 mm, RAL 7035, with cut-outs for cable ties or Velcro	St, 1 mm, RAL 7021, with cut-outs for cable ties or Velcro
	Cabinet dimensions				RAL 7035	RAL 7021	RAL 7035	RAL 7021
	Height		Width	Depth	PU 2 pieces	PU 2 pieces	PU 2 pieces	PU 2 pieces
No.	U	mm	mm	mm	assembled	assembled	assembled	assembled
1	20	998	600	600	–	–	–	–
2	20	998	600	800				
3	25	1220	600	600	–	–	–	–
4	25	1220	600	800				
5	29	1398	600	600	–	–	–	–
6	29	1398	600	800				
7	34	1620	600	600	–	–	–	–
8	34	1620	600	800				
9	34	1620	600	900				
10	38	1798	600	600	23117-026	23117-020	23117-029	**23117-023**
11	38	1798	600	800				
12	38	1798	600	900				
13	38	1798	800	600	23117-026	23117-020	23117-029	**23117-023**
14	38	1798	800	800				
15	43	2020	600	600	23117-027	**23117-021**	23117-030	**23117-024**
16	43	2020	600	800				
17	43	2020	600	900				
18	43	2020	800	600	23117-027	**23117-021**	23117-030	**23117-024**
19	43	2020	800	800				
20	47	2198	600	600	23117-028	**23117-022**	23117-031	**23117-025**
21	47	2198	600	800				
22	47	2198	600	900				
23	47	2198	800	800	23117-028	**23117-022**	23117-031	**23117-025**

Cabinets – *eurorack* Universal ServicePLUS

eurorack Universal 19" slide rails

Order Information

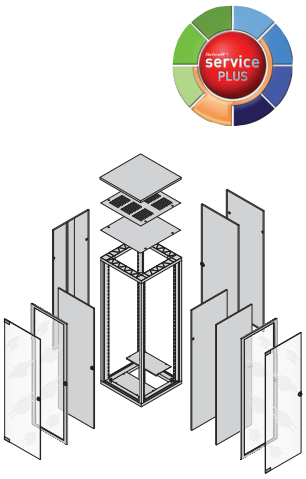

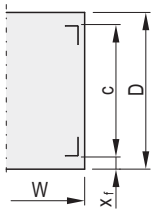

00205066

x_f = distance from front
c = pitch of 19" plane
D = cabinet depth
W = cabinet width

Slide rail

25 kg

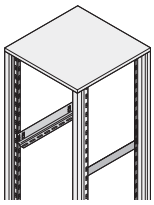

00108056

St, 1.5 mm, finish AlZn, static load-carrying capacity 25 kg/pair, panel/slide mounts (2 pairs), please order reduced widthdepth members separately
see page 1.309

40 kg, depth-adjustable

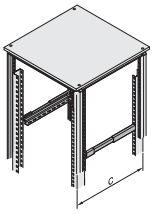

41003081

St, 1.5 mm, finish AlZn, static load-carrying capacity 40 kg/pair, depth-adjustable **(c: 675-850 mm)**; please order panel/slide mounts (2 pairs) separately
see page 1.309

Short slide rail

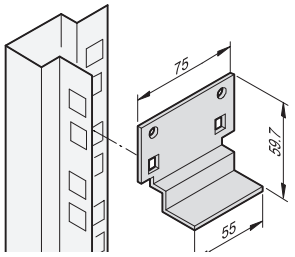

sc96xxxx

St, 1.5 mm, finish AlZn, static load-carrying capacity 15 kg/pair

	Cabinet dimensions										
	Height		Width	Depth	x_f	c	PU 2 pieces	PU 10 pieces	PU 2 pieces	PU 2 pieces	PU 10 pieces
No.	U	mm	mm	mm	mm	mm	enclosed loose	enclosed loose	enclosed loose	enclosed loose	enclosed loose
1	20	998	600	600	60	480	**22127-094**	**21127-197**	–	**20118-592**	**20118-593**
2	20	998	600	800	60	680	**22127-095**	**21127-198**	**28127-001**	**20118-592**	**20118-593**
3	25	1220	600	600	60	480	**22127-094**	**21127-197**	–	**20118-592**	**20118-593**
4	25	1220	600	800	60	680	**22127-095**	**21127-198**	**28127-001**	**20118-592**	**20118-593**
5	29	1398	600	600	60	480	**22127-094**	**21127-197**	–	**20118-592**	**20118-593**
6	29	1398	600	800	60	680	**22127-095**	**21127-198**	**28127-001**	**20118-592**	**20118-593**
7	34	1620	600	600	60	480	**22127-094**	**21127-197**	–	**20118-592**	**20118-593**
8	34	1620	600	800	60	680	**22127-095**	**21127-198**	**28127-001**	**20118-592**	**20118-593**
9	34	1620	600	900	60	780	**22127-096**	**21127-199**	**28127-001**	**20118-592**	**20118-593**
10	38	1798	600	600	60	480	**22127-094**	**21127-197**	–	**20118-592**	**20118-593**
11	38	1798	600	800	60	680	**22127-095**	**21127-198**	**28127-001**	**20118-592**	**20118-593**
12	38	1798	600	900	60	780	**22127-096**	**21127-199**	**28127-001**	**20118-592**	**20118-593**
13	38	1798	800	600	110	380	**22127-094**	–	–	**20118-592**	**20118-593**
14	38	1798	800	800	110	580	25127-575	**21127-197**	–	**20118-592**	**20118-593**
15	43	2020	600	600	60	480	**22127-094**	**21127-197**	–	**20118-592**	**20118-593**
16	43	2020	600	800	60	680	**22127-095**	**21127-198**	**28127-001**	**20118-592**	**20118-593**
17	43	2020	600	900	60	780	**22127-096**	**21127-197**	**28127-001**	**20118-592**	**20118-593**
18	43	2020	800	600	110	380	**22127-094**	–	–	**20118-592**	**20118-593**
19	43	2020	800	800	110	580	25127-575	**21127-197**	–	**20118-592**	**20118-593**
20	47	2198	600	600	60	480	**22127-094**	**21127-197**	–	**20118-592**	**20118-593**
21	47	2198	600	800	60	680	**22127-095**	**21127-198**	**28127-001**	**20118-592**	**20118-593**
22	47	2198	600	900	60	780	**22127-096**	**21127-197**	**28127-001**	**20118-592**	**20118-593**
23	47	2198	800	800	110	580	**22127-094**	**21127-197**	–	**20118-592**	**20118-593**

Order Information

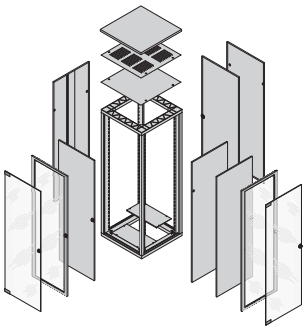

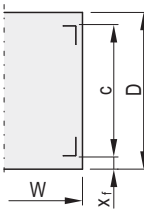

00205066

x_f = distance from front
c = pitch of 19" plane
D = cabinet depth
W = cabinet width

Dimensions standard assembly

Fixed shelf, 1 U, 75 kg

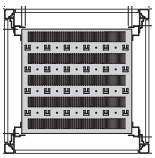

00105050

Full depth

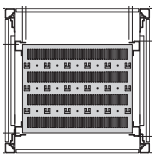

00105051

Recessed by c - 100 mm

St, 1.5 mm, RAL 7021, with perforation, static load-carrying capacity 75 kg, incl. GND/earthing; panel/slide mounts (2 pairs), please order depth members or reduced width depth members separately
see page 1.309

Depth member for 600 mm width

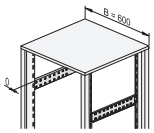

ERTP0045

St, 1.5 mm, AlZn

Reduced width depth member for 800 mm width

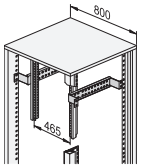

ertp0044

St, 2.5 mm, zinc-plated, RAL 7021, 19" plane at least 110 mm from front edge of cabi-net; please order panel/slide mounts (2 pairs) separately
see page 1.309

No.	Cabinet dimensions Height U	Height mm	Width mm	Depth mm	x_f mm	c mm	1 piece assembled	1 piece assembled	PU 2 pieces assembled	PU 2 pieces assembled
1	20	998	600	600	60	480	**22117-842**	22117-845	**22117-389**	–
2	20	998	600	800	60	680	**22117-843**	22117-671	**22117-390**	–
3	25	1220	600	600	60	480	**22117-842**	22117-845	**22117-389**	–
4	25	1220	600	800	60	680	**22117-843**	22117-671	**22117-390**	–
5	29	1398	600	600	60	480	**22117-842**	22117-845	**22117-389**	–
6	29	1398	600	800	60	680	**22117-843**	22117-671	**22117-390**	–
7	34	1620	600	600	60	480	**22117-842**	22117-845	**22117-389**	–
8	34	1620	600	800	60	680	**22117-843**	22117-671	**22117-390**	–
9	34	1620	600	900	60	780	22117-844	**22117-843**	22117-391	–
10	38	1798	600	600	60	480	**22117-842**	22117-845	**22117-389**	–
11	38	1798	600	800	60	680	**22117-843**	22117-671	**22117-390**	–
12	38	1798	600	900	60	780	22117-844	**22117-843**	22117-391	–
13	38	1798	800	600	110	380	**22117-842**	–	–	22117-839
14	38	1798	800	800	110	580	**22117-871**	–	–	22117-840
15	43	2020	600	600	60	480	**22117-842**	22117-845	**22117-389**	–
16	43	2020	600	800	60	680	**22117-843**	22117-671	**22117-390**	–
17	43	2020	600	900	60	780	22117-844	**22117-843**	22117-391	–
18	43	2020	800	600	110	380	**22117-842**	–	–	22117-839
19	43	2020	800	800	110	580	**22117-871**	–	–	22117-840
20	47	2198	600	600	60	480	**22117-842**	22117-845	**22117-389**	–
21	47	2198	600	800	60	680	**22117-843**	22117-671	**22117-390**	–
22	47	2198	600	900	60	780	22117-844	**22117-843**	22117-391	–
23	47	2198	800	800	110	580	**22117-871**	–	–	22117-840

Cabinets – *eurorack* Universal ServicePLUS

eurorack Universal Telescopic 19" shelves

Order Information

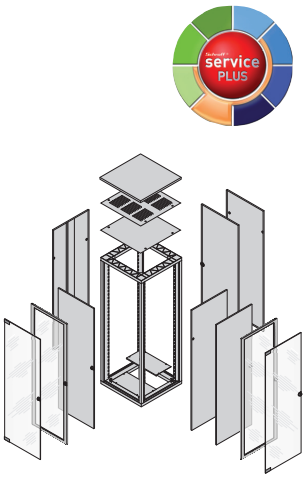

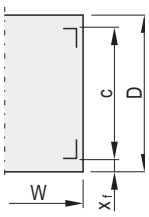

00205066

x_f = distance from front
c = pitch of 19" plane
D = cabinet depth
W = cabinet width

	Cabinet dimensions				Dimensions standard assembly	Shelf, telescopic, 2 U, 70 kg			
	Height		Width	Depth	c	Full depth	Shortened by 100 mm	T-bar lock	GND/earthing
No.	U	mm	mm	mm	mm	1 piece assembled	1 piece assembled	1 piece assembled	PU 1 kit assembled
1	20	998	600	600	450 - 550	**21130-353**	**21130-352**	**23130-092**	**21120-189**
2	20	998	600	800	650 - 750	**21130-355**	**21130-354**	**23130-092**	**21120-189**
3	25	1220	600	600	450 - 550	**21130-353**	**21130-352**	**23130-092**	**21120-189**
4	25	1220	600	800	650 - 750	**21130-355**	**21130-354**	**23130-092**	**21120-189**
5	29	1398	600	600	450 - 550	**21130-353**	**21130-352**	**23130-092**	**21120-189**
6	29	1398	600	800	650 - 750	**21130-355**	**21130-354**	**23130-092**	**21120-189**
7	34	1620	600	600	450 - 550	**21130-353**	**21130-352**	**23130-092**	**21120-189**
8	34	1620	600	800	650 - 750	**21130-355**	**21130-354**	**23130-092**	**21120-189**
9	34	1620	600	900	–	–	–	–	–
10	38	1798	600	600	450 - 550	**21130-353**	**21130-352**	**23130-092**	**21120-189**
11	38	1798	600	800	650 - 750	**21130-355**	**21130-354**	**23130-092**	**21120-189**
12	38	1798	600	900	–	–	–	–	–
13	38	1798	800	600	–	–	–	–	–
14	38	1798	800	800					
15	43	2020	600	600	450 - 550	**21130-353**	**21130-352**	**23130-092**	**21120-189**
16	43	2020	600	800	650 - 750	**21130-355**	**21130-354**	**23130-092**	**21120-189**
17	43	2020	600	900	–	–	–	–	–
18	43	2020	800	600	–	–	–	–	–
19	43	2020	800	800					
20	47	2198	600	600	450 - 550	**21130-353**	**21130-352**	**23130-092**	**21120-189**
21	47	2198	600	800	450 - 550	**21130-355**	**21130-354**	**23130-092**	**21120-189**
22	47	2198	600	900	–	–	–	–	–
23	47	2198	800	800	–	–	–	–	–

00105069

St, 1.5 mm, static load-carrying capacity 70 kg, incl. telescopic slide; please order T-bar lock and GND/ earthing separately

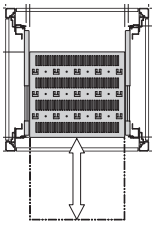

00105070

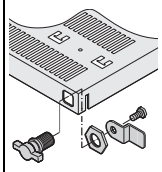

01004125

to lock the telescopic shelf

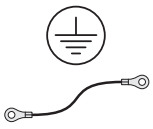

05904052

for telescopic shelf

Order Information

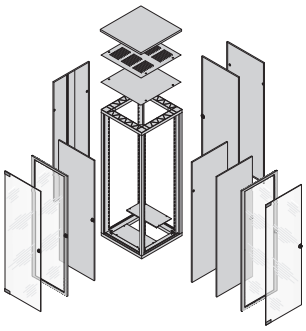

					Fixed shelf		
					Full depth	Shortened by 100 mm	Depth member
					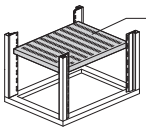 00106053	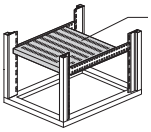 00106054	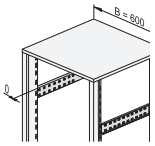 ERTP0045
					St 1.5 mm, RAL 7021, load-carrying capacity 75 kg, incl. GND/ earthing	St 1.5 mm, RAL 7021, load-carrying capacity 75 kg, incl. GND/ earthing, depth member required, please order separately	St, 1.5 mm, AlZn
	Cabinet dimensions						
	Height		Width	Depth	1 piece	1 piece	PU 2 pieces
No.	U	mm	mm	mm	assembled	assembled	assembled
1	20	998	600	600	22117-846	22117-851	**22117-389**
2	20	998	600	800	22117-847	22117-852	**22117-390**
3	25	1220	600	600	22117-846	22117-851	**22117-389**
4	25	1220	600	800	22117-847	22117-852	**22117-390**
5	29	1398	600	600	22117-846	22117-851	**22117-389**
6	29	1398	600	800	22117-847	22117-852	**22117-390**
7	34	1620	600	600	22117-846	22117-851	**22117-389**
8	34	1620	600	800	22117-847	22117-852	**22117-390**
9	34	1620	600	900	22117-848	22117-847	22117-391
10	38	1798	600	600	22117-846	22117-851	**22117-389**
11	38	1798	600	800	22117-847	22117-852	**22117-390**
12	38	1798	600	900	22117-848	22117-847	22117-391
13	38	1798	800	600	22117-849	22117-853	**22117-389**
14	38	1798	800	800	22117-850	22117-854	**22117-390**
15	43	2020	600	600	22117-846	22117-851	**22117-389**
16	43	2020	600	800	22117-847	22117-852	**22117-390**
17	43	2020	600	900	22117-848	22117-847	22117-391
18	43	2020	800	600	22117-849	22117-853	**22117-389**
19	43	2020	800	800	22117-850	22117-854	**22117-390**
20	47	2198	600	600	22117-846	22117-851	**22117-389**
21	47	2198	600	800	22117-847	22117-852	**22117-390**
22	47	2198	600	900	22117-848	22117-847	22117-391
23	47	2198	800	800	22117-850	22117-854	**22117-390**

Cabinets – *eurorack* Universal ServicePLUS

eurorack Universal — Telescopic shelves on universal cabinet uprights

Order Information

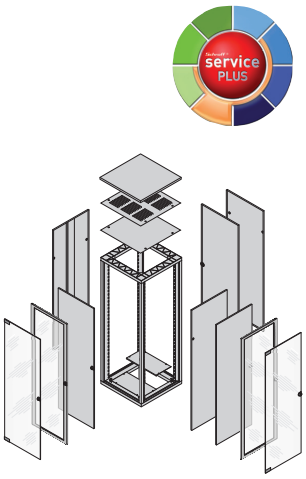

	Cabinet dimensions				Telescopic shelf, Universal eurorack					General components
	Height		Width	Depth	Full depth	Shortened by 100 mm	Telescopic slides	T-bar lock	GND/earthing	
No.	U	mm	mm	mm	1 piece assembled	1 piece assembled	PU 2 pieces assembled	1 piece assembled	PU 1 kit assembled	
					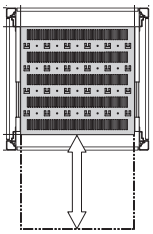 00105072	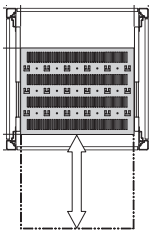 00105073	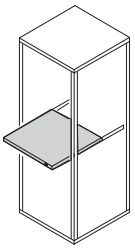 ERA46351	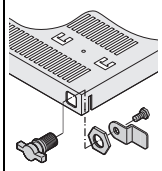 01004125	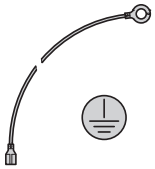 aza43284	
					St, 1.5 mm, RAL 7021, please order telescopic slides and T-bar lock separately	St, 1.5 mm, RAL 7021, please order telescopic slides and T-bar lock separately	St, zinc-plated	to lock the telescopic shelf	for telescopic shelf	
1	20	998	600	600	22117-855	22117-860	**22114-340**	**21101-132**	**21101-178**	
2	20	998	600	800	22117-856	22117-861	**22114-342**			
3	25	1220	600	600	22117-855	22117-860	**22114-340**	**21101-132**	**21101-178**	
4	25	1220	600	800	22117-856	22117-861	**22114-342**			
5	29	1398	600	600	22117-855	22117-860	**22114-340**	**21101-132**	**21101-178**	
6	29	1398	600	800	22117-856	22117-861	**22114-342**			
7	34	1620	600	600	22117-855	22117-860	**22114-340**	**21101-132**	**21101-178**	
8	34	1620	600	800	22117-856	22117-861	**22114-342**			
9	34	1620	600	900	–	–	–			
10	38	1798	600	600	22117-855	22117-860	**22114-340**	**21101-132**	**21101-178**	
11	38	1798	600	800	22117-856	22117-861	**22114-342**			
12	38	1798	600	900	–	–	–			
13	38	1798	800	600	22117-858	22117-862	**22114-340**	**21101-132**	**21101-178**	
14	38	1798	800	800	22117-859	22117-863	**22114-342**			
15	43	2020	600	600	22117-855	22117-860	**22114-340**	**21101-132**	**21101-178**	
16	43	2020	600	800	22117-856	22117-861	**22114-342**			
17	43	2020	600	900	–	–	–			
18	43	2020	800	600	22117-858	22117-862	**22114-340**	**21101-132**	**21101-178**	
19	43	2020	800	800	22117-859	22117-863	**22114-342**			
20	47	2198	600	600	22117-855	22117-860	**22114-340**	**21101-132**	**21101-178**	
21	47	2198	600	800	22117-856	22117-861	**22114-342**			
22	47	2198	600	900	–	–	–			
23	47	2198	800	800	22117-859	22117-863	**22114-342**	**21101-132**	**21101-178**	

General components

Mechanics

from page 4.0

Electrics

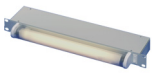

from page 3.29

Power distribution

from page 3.50

Climate control

4.0

Content

Cabinets 1
Wall mounted cases 2
Accessories for cabinets and wall mounted cases . 3
Climate control . 4
Electronics cases 5
Subracks/ 19" chassis 6
Front panels, plug-in units . . . 7
Systems 8
Power supply units 9
Backplanes . . . 10
Connectors, front panel component system 11
Appendix 12

Cabinets – Outdoor

41602001

41603009

The dual wall concept provides a natural airflow between the outer and inner wall, substantially reducing the requirement for additional heat removal.

41603010

Optimal protection from vandalism thanks to a fixing accessible only from within. Easily exchangeable exterior cladding components.

41603005

The gasketing material can be selected to suit the requirements (IP protection, EMC shielding) and may be exchanged subsequently.

Standard / Certifications

- External dimensions in accordance with IEC 619691/2, IEC 6091721
- Internal dimensions in accordance with ETS 300119, part 2
- Type of protection IP 55 in accordance with IEC 60529
- Protective GND/earthing connections in accordance with DIN EN 50178 / VDE 0160
- Vibration in accordance with IEC 619693 class 2

Cabinets – Outdoor

Overview 1.316

Outdoor cabinet for the most challenging operating conditions

- High stability up to earthquake resistance
- Weight-saving aluminium construction
- Assembly possibilities with 19", ETSI or other accessories
- Tested thermal concepts available
- IP 55 and security against vandalism

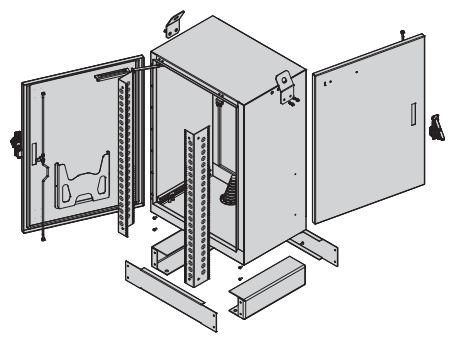

41612054

COMLINE: single wall

Weight-saving aluminium construction. Single wall cabinet ready for wall, pole or ground installation. Optimal for diverse applications in industry, transportation and communication.

Versions

- ECL - single access (front door)
- FTTX - single access (front door) and dual access (front and rear door)

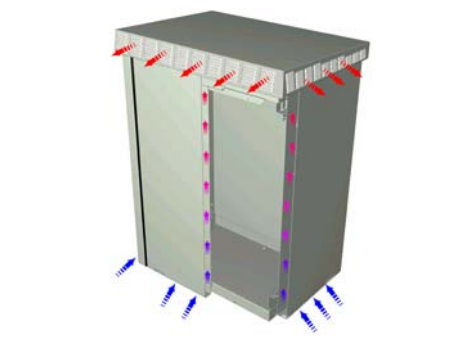

41603054

Unibody

Cost-effective inner case with removable outer cladding.
This version has advantages especially for small cabinets.
If accessed through the front door, it meets the installation requirements.

Versions

- With natural convection
- With fan
- With heat exchanger

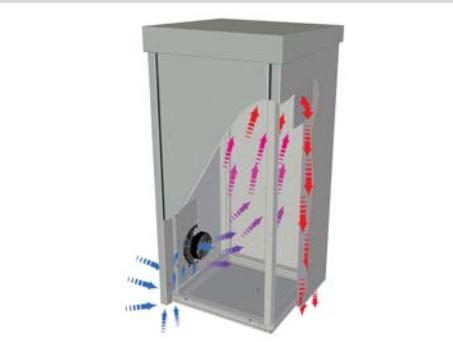

41603051

Modular

Aluminium profile frame with removable, double-walled cladding.
This version has advantages especially for large cabinets and if access from all sides is needed.

Versions

- With fan
- With heat exchanger

30407004

ServicePLUS from page 1.330

e. g. individual configurations also with air conditioners
e. g. custom solutions (electrical, thermal, backup power supplies, special sizes)

www.schroff.biz/ServicePLUS

COMLINE
ECL - single access 1.328
FTTX - single and dual access 1.329

Outdoor Unibody
Unibody 1.322
Unibody VENT 1.323
Unibody HEX 1.324
Wall mounting kit 1.325

Outdoor Modular
Modular VENT ... 1.326
Modular HEX 1.327

Accessories
Metric panel/slide mounts 1.328
19" panel/slide mounts 1.329

ServicePLUS ... 1.330

Outdoor COMLINE ECL

41612001

Drawing shows version with with plinth

- Single wall, lightweight aluminium cabinet
- Heat dissipation through natural convection
- IP 55
- 2 versions
  - With plinth
  - Without plinth

Delivery comprises

Item	Qty	Description
1	1	Body, single wall, Al, 2.5 mm, RAL 7035
2	1	Front door, Al, 2.5 mm, RAL 7035, 3-point locking, lever handle with DIN profile half cylinder, door opening angle 135°, door retainer at 110°, door hinged on left hand side; electrical door switch
3	1	Solar shield top cover, Al, 2 mm, RAL 7035
4	1	Plinth, Al, 3 mm, height 120 mm (only for version with plinth)
5	2	19"/23" panel/slide mounts, St, galvanised, 2.5 mm
6	1	GND/earthing kit, assembled

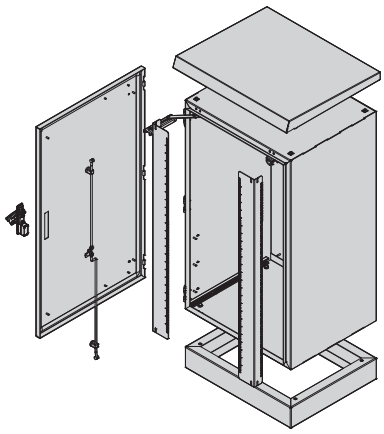

41612052

Drawing shows version with plinth

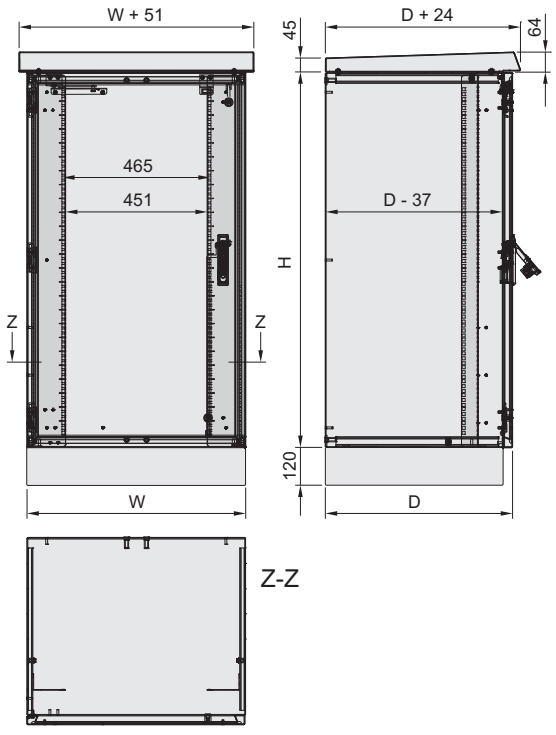

41612050

Drawing shows version with plinth
Door opening height = H - 75 mm;
door opening width = W - 75 mm

Order Information

Height H	Height H	Width W	Depth D	With plinth	Without plinth
U	mm	mm	mm	Part no.	Part no.
12	600	600	500	12349-001	12349-009
18	900	600	500	12349-002	12349-010
18	900	700	500	12349-003	12349-011
25	1200	700	600	12349-004	12349-012

Height dimensions without plinth (120 mm)

Note

- 19"/23" panel/slide mount kit see page 1.319

Cabinets – Outdoor - COMLINE

19"/23" panel/slide mount kit for COMLINE ECL

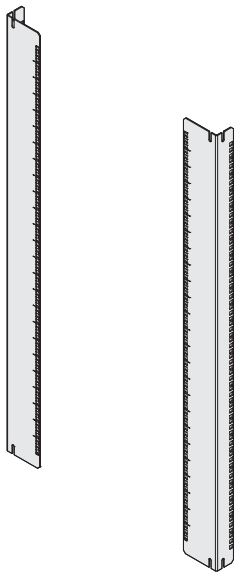

41612057

- For fitting to depth member (25 mm grid)
- For recessed installation of 19"/23" components
- Slide rails can be fitted
- Load-carrying capacity 400 kg

Delivery comprises

Item	Qty	Description
1	2	19"/23" panel/slide mount, St, galvanised, 2.5 mm
2	1	Assembly kit

Order Information

For cabinet height		For cabinet width	Part no.
U	mm	mm	
12	600	600	**22349-024**
18	900	600	**22349-025**
18	900	700	**22349-026**
25	1200	700	**22349-027**

Outdoor COMLINE FTTX

41612003

- Single wall, lightweight aluminium cabinet
- Insulated cabinet
- IP 55
- 2 versions with plinth
  - Single access (front door)
  - Dual access (front and rear door)

Delivery comprises

Item	Qty	Description
1	1	Body, Al, 2.5 mm, RAL 7035, single wall side panels, insulation thickness 12 mm, non inflammable; 3 cable entry boots are mounted in base for various sizes of cables, 2 removeable lifting brackets
2	1/2	Door, Al, 2.5 mm, RAL 7035, 3-point locking, lever handle with DIN profile half cylinder (1242E), door opening angle 135°, door retainer at 110°, door hinged on left hand side; electrical door switch
3	1	Plinth, Al, 3 mm, height 140 mm
4	2	19"/23" panel/slide mounts, galvanised St, 2.5 mm
5	1	Document pocket, thermoplastic (part no. ADP2)
6	1	GND/earthing kit, assembled

Order Information

Height H	Height H	Width W	Depth D	Dual access	Single access
U	mm	mm	mm	Part no.	Part no.
12	600	800	500	12349-007	12349-005
25	1200	800	600	12349-008	12349-006

Dimensions without plinth (140 mm)

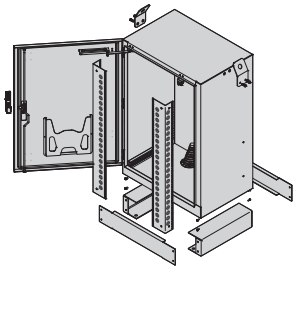

41612053

Single access

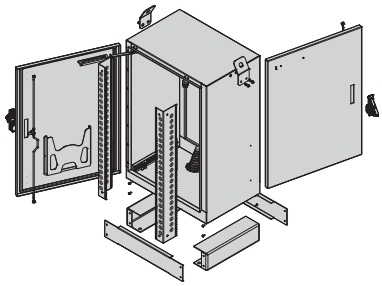

41612054

Dual access

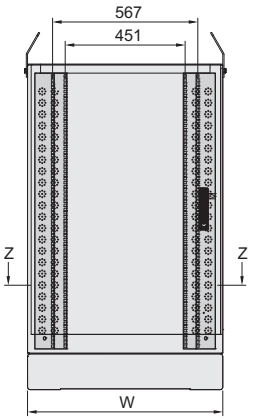

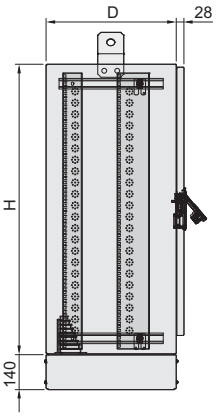

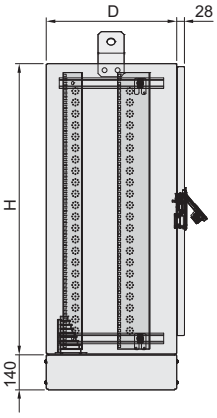

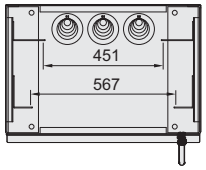

41612055

Dual access
Height of door opening = H - 270 mm;
width of door opening = W - 100 mm

41612056

Single access

Note

- 19"/23" panel/slide mount kit see page 1.321
- Cable entry see page 1.321
- Spool for fibre optic cables see page 1.321

Cabinets – Outdoor - COMLINE

19"/23" panel/slide mount kit for COMLINE FTTX

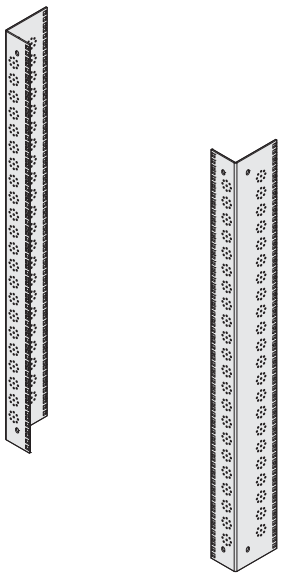

41612058

- For fitting to depth member (25 mm grid)
- For recessed installation of 19"/23" components
- Slide rails can be fitted
- Load-carrying capacity 400 kg

Delivery comprises

Item	Qty	Description
1	2	19"/23" panel/slide mount, St, galvanised, 2.5 mm
2	1	Assembly kit

Order Information

For cabinet height U	For cabinet height mm	Usable height U	Part no.
12	600	10	**22349-032**
25	1200	23	**22349-033**

Cable entry

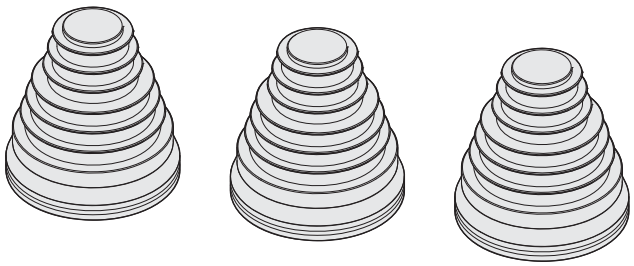

41612059

- For cable ducting through the base of the cabinet

Delivery comprises

Item	Qty	Description
1	3	Cable entry, for cable diameter 30 ... 72 mm, EPDM, RAL 7035

Order Information

Cable entry	**22349-034**

Spool for fibre optic cables

FTTXMoldedRadiusModules

Delivery comprises

Item	Qty	Description
1	4	Spool for fibre optic cables, molded from black plastic
2	4	Screws, M5

Order Information

Description	Part no.
Spool for fibre optic cables	**TOPTKSPL**

Unibody

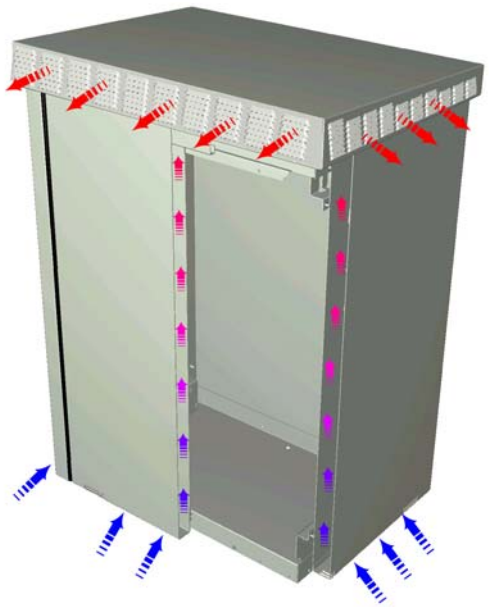

41603054

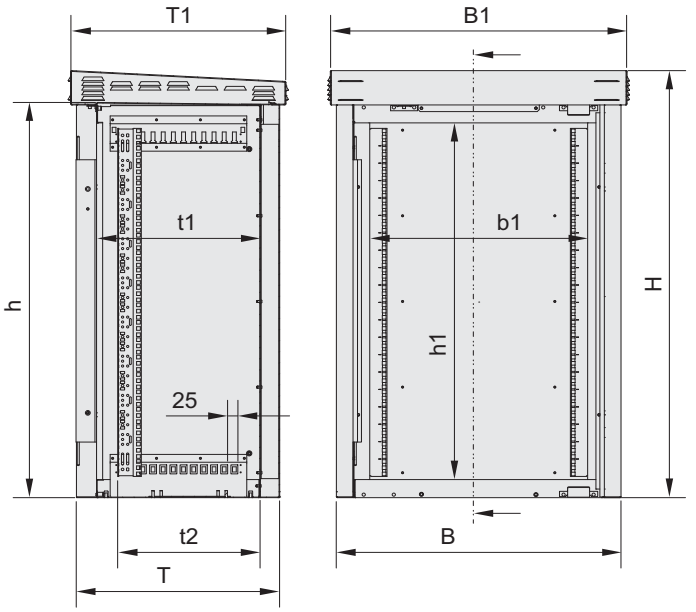

41603058

H*) mm	H U	B mm	T mm	h mm	b_1 mm	t_1 mm	t_2 mm	h_1 mm	B_1 mm	T_1 mm
930	16	700	500	838	536	400	350	736	730	530
1100	20	700	500	1013	536	400	350	911	730	530

t_2 = max. 19" assembly dimension
*) height without base/plinth (base/plinth height 100 mm)

ServicePLUS see page 1.330

- One-piece inner case with removable outer cladding
- Heat dissipation through natural convection, max. 6 W/K
- IP 55
- Double-walled, Al

Delivery comprises (assembled)

Item	Qty	Description
1	1	Internal case, Al
2	2	Side panel, Al, RAL 7035
3	1	Front door, Al, RAL 7035, 3-point locking, lever handle with DIN profile half cylinder, door opening angle 135°, door retainer at 120°, door hinged on left hand side
4	1	Rear panel, Al, RAL 7035
5	1	Top cover, Al, RAL 7035
6	1	Plinth with removable covers (front and sides), height 100 mm
7	1	Base plate with cable connection plate, Al
8	4	Depth member for 19" metric panel/slide mounts
9	1	GND/earthing kit, assembled

Order Information

Height U	Height mm	Width mm	Depth mm	q_W W/K	Part no.
16	930	700	500	5	11249-003
20	1100	700	500	6	11249-005
Wall mounting kit 1 kit					21249-017

q_W = specific heat dissipation capacity

- Please order wall mounting material separately, see page 1.325
- Please order panel/slide mounts separately, see page 1.328

Cabinets – Outdoor - Unibody

Unibody VENT

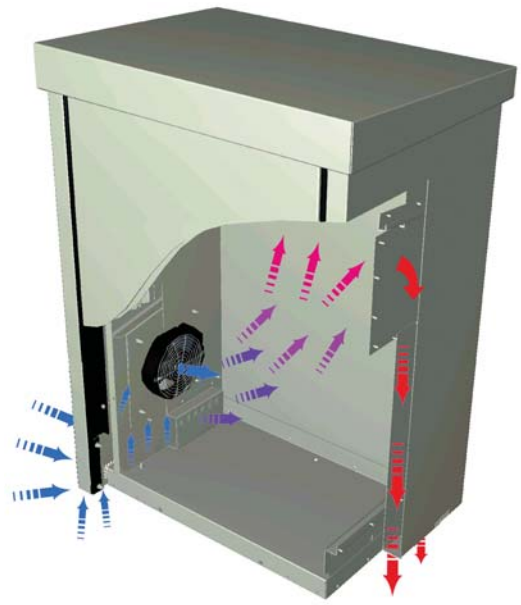

41603055

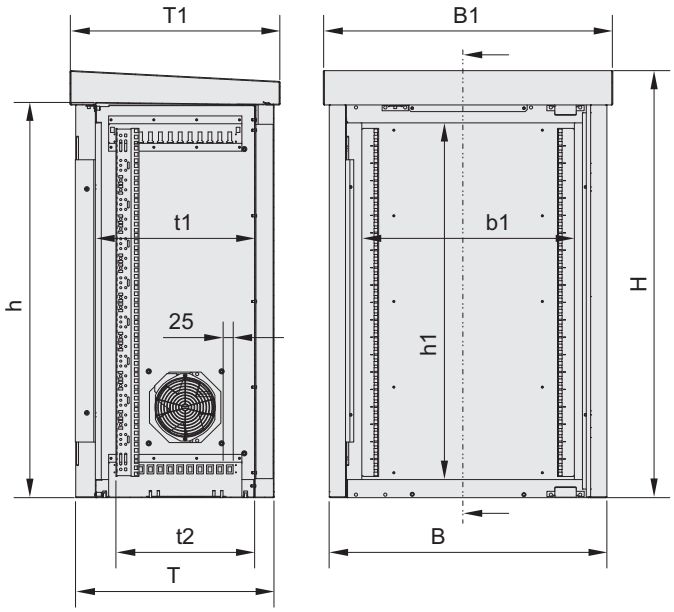

41605050

H *) mm	H U	B mm	T mm	h mm	b_1 mm	t_1 mm	t_2 mm	h_1 mm	B_1 mm	T_1 mm
930	16	700	500	838	536	400	350	736	730	530
1100	20	700	500	1013	536	400	350	911	730	530
1330	25	700	500	1238	536	400	350	1136	730	530

t_2 = max. 19" assembly dimension
*) height without base/plinth (base/plinth height 100 mm)

Calculation example at 35 W/K:

(Values as per ETS 300019-1-4 Class 4.1)
Internal temperature 50° C - external temperature 40° C = 10 K.
Up to 350 W of dissipation loss can thus be installed.
(35 W/K x 10 K).

ServicePLUS see page 1.330

- One-piece inner case with removable outer cladding
- Forced heat dissipation via fan assembled in side panel, max. 35 W/K
- IP 55
- Double-walled, Al

Delivery comprises (assembled)

Item	Qty	Description
1	1	Internal case, Al
2	2	Side panel, Al, RAL 7035
3	1	Front door, Al, RAL 7035, 3-point locking, lever handle with DIN profile half cylinder, door opening angle 135°, door retainer at 120°, door hinged on left hand side
4	1	Rear panel, Al, RAL 7035
5	1	Top cover, Al, RAL 7035
6	1	Plinth with removable covers (front and sides), height 100 mm
7	1	Base plate with cable connection plate, Al
8	4	Depth member for 19" metrical panel/slide mounts
9	1	GND/earthing kit, assembled
10	1	Axial fan (side mounted), airflow volume: 360 m^3/h, 230 V_{AC}, 50 Hz, noise level less than 53 dB(A), max. pressure: 176 Pa, power consumption: 35 W, mains supply to screw terminal block
11	1	Filter mat
12	1	Thermostat, complete with cable

Order Information

Height U	Height mm	Width mm	Depth mm	q_W W/K	Part no.
16	930	700	500	35	11249-007
20	1100	700	500	35	11249-009
25	1330	700	500	35	11249-012
Replacement fan 230 V_{AC} 1 piece					21149-185
Air filter for fan 10 pieces					21149-184
Wall mounting kit 1 kit					21249-017

q_W = specific heat dissipation capacity

- Please order wall mounting material separately, see page 1.325
- Please order panel/slide mounts separately, see page 1.328

Unibody HEX

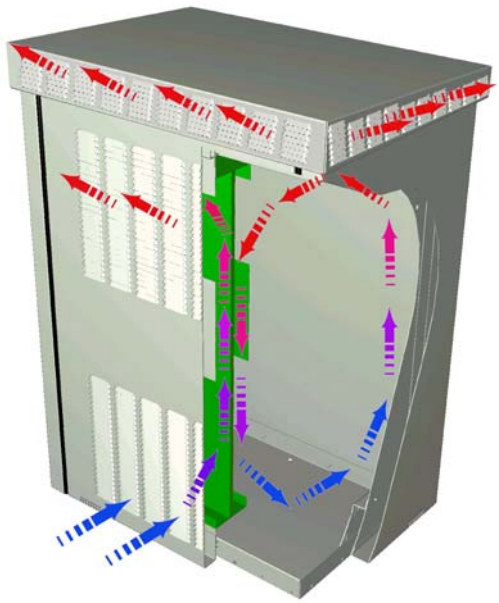

41603056

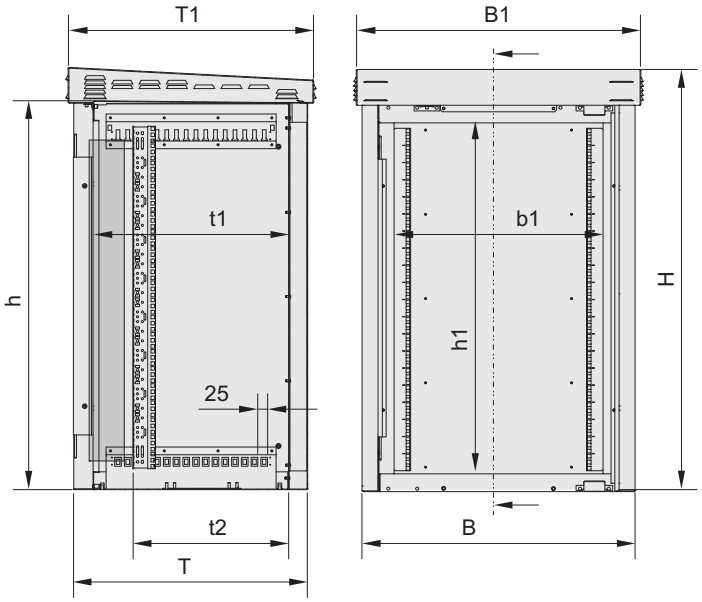

41605051

H *) mm	H U	B mm	T mm	h mm	b_1 mm	t_1 mm	t_2 mm	h_1 mm	B_1 mm	T_1 mm
1330	25	700	600	1238	536	500	400	1136	730	630

t_2 = max. 19" assembly dimension
*) height without base/plinth (base/plinth height 100 mm)

Calculation example at 70 W/K:
(Values as per ETS 300019-1-4 Class 4.1)
Internal temperature 50° C - external temperature 40° C = 10 K.
Up to 700 W of dissipation loss can thus be installed.
(70 W/K x 10 K).

ServicePLUS see page 1.330

- One-piece inner case with removable outer cladding
- Forced heat dissipation via integrated heat exchanger in the door, max. 70 W/K
- IP 55
- Double-walled, Al

Delivery comprises (assembled)

Item	Qty	Description
1	1	Internal case, Al
2	2	Side panel, Al, RAL 7035
3	1	Front door, Al, RAL 7035, 3-point locking, lever handle with DIN profile half cylinder, door opening angle 135°, door retainer at 120°, door hinged on left hand side
4	1	Rear panel, Al, RAL 7035
5	1	Top cover, Al, RAL 7035
6	1	Plinth with removable covers (front and sides), height 100 mm
7	1	Base plate with cable connection plate
8	4	Depth member for 19" metric panel/slide mounts
9	1	GND/earthing kit, assembled
10	1	Heat exchanger 48 V_{DC} (electronically regulated with alarm outputs), incl. temperature sensor, heater and DC connecting cable with IEC plug, 3 m

Order Information

Height U	Height mm	Width mm	Depth mm	q_W W/K	Part no.
25	1330	700	600	70	11249-016
Wall mounting kit 1 kit					21249-017

q_W = specific heat dissipation capacity, average values

Technical data heat exchanger

	WT 70
Dimensions (height x width x depth)	1010 x 465 x 150 mm
Heater (input voltage/capacity)	230 V_{AC}/1000 W
Specific heat dissipation capacity	70 W/K
Fan	2 pieces
Input voltage	48 V_{DC}
Airflow volume external circuit	510 m^3/h
Airflow volume internal circuit	600 m^3/h
Temperature range	-40 ... 50 °C
Type of protection	IP 55
Weight	21 kg

- Please order wall mounting material separately, see page 1.325
- Please order panel/slide mounts separately, see page 1.328
- Equipment cable for heater in heat exchanger (230V_{AC}, IEC connector), see page 3.38

Cabinets – Outdoor - Unibody

Wall mounting for Unibody

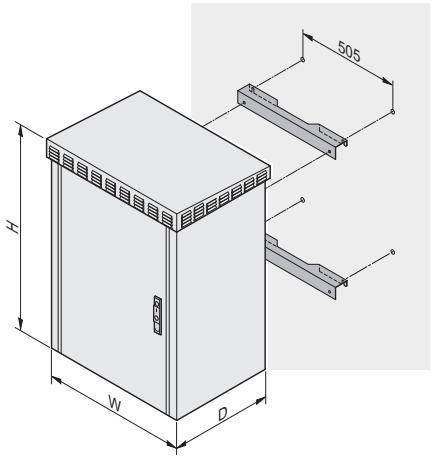

41603064

- Suitable for all Unibody standard dimensions
- Cut-out for cable ducting from the top

Delivery comprises

Item	Qty	Description
1	2	Bracket
2	1	Assembly kit

Order Information

Description	Part no.
Wall mounting kit	21249-017

Modular VENT

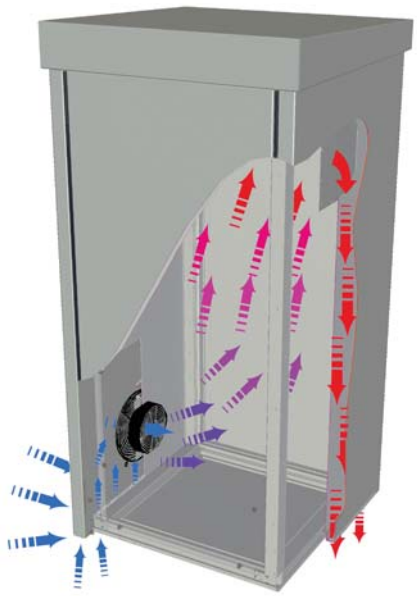

41603051

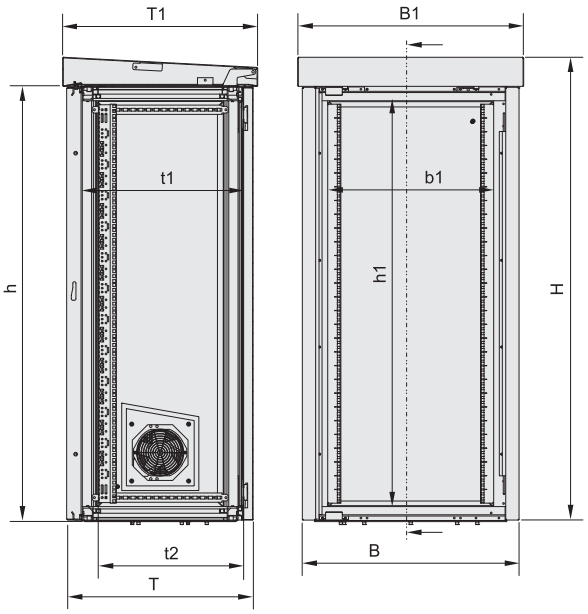

41603059

H *) mm	H U	w mm	T mm	h mm	b_1 mm	t_1 mm	t_2 mm	h_1 mm	B_1 mm	T_1 mm
1330	25	1300	600	1233	1136	500	450	1136	1330	630
1510	29	700	600	1408	536	500	450	1311	730	630
1510	29	1300	600	1408	1136	500	450	1311	1330	630

t_2 = max. 19" assembly dimension
*) height without base/plinth (base/plinth height 100 mm)

Calculation example at 35 W/K:

(Values as per ETS 300019-1-4 Class 4.1)
Internal temperature 50° C - external temperature 40° C = 10 K.
Up to 350 W of dissipation loss can thus be installed.
(35 W/K x 10 K).

ServicePLUS see page 1.330

- Aluminium profile frame with removable, double-walled cladding
- Forced heat dissipation via fans assembled in the side panel, max. 35 W/K
- IP 55
- Double-walled, Al
- Single door (for 700 mm width), double door (for 1300 mm width)

Delivery comprises (assembled)

Item	Qty	Description
1	1	Frame, screwed, Al
2	2	Double skin side panel, Al, inner untreated, outer external RAL 7035
3	1	Front door at 700 mm width, double door at 1300 mm width, Al, RAL 7035, 3-point locking, lever handle with DIN half profile cylinder, door opening angle 135°, door retainer at 120°, door hinged on left hand side
4	1	Double skin rear panel, Al, inner untreated, outer external RAL 7035
5	1	External top, Al, RAL 7035
6	1	Base/plinth with removable cover, height 100 mm
7	1	Base plate with cable connection plate, Al
8	4	Depth member for 19" metric panel/slide mounts
9	1	Earthing kit, assembled
10	1	Axial fan (assembled laterally), airflow volume: 360 m^3/H, 230 V_{AC} 50 Hz, noise level less than 53 dB(A), max. pressure 176 Pa, power consumption 35 W, mains/line connector with screw terminal block
11	1	Filter mat
12	1	Thermostat, complete with cable

Order Information

Height U	Height mm	Width mm	Depth mm	q_W W/K	Part no.
25	1330	1300	600	35	10149-305
29	1510	700	600	35	10149-306
29	1510	1300	600	35	10149-308
Replacement fan 230 V_{AC} 1 piece					21149-185
Air filter for fan 10 pieces					21149-184

q_W = specific heat dissipation capacity

- Please order panel/slide mounts separately, see page 1.328

Cabinets – Outdoor - Modular

Modular HEX

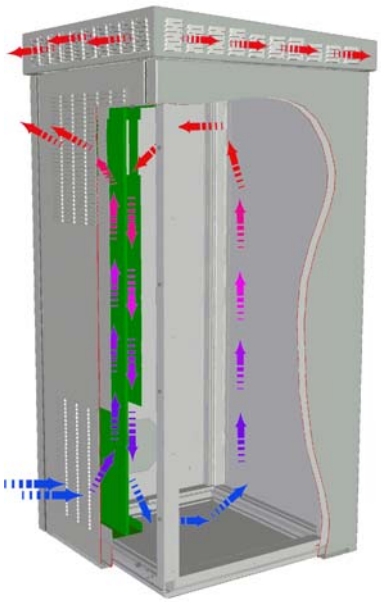

41603052

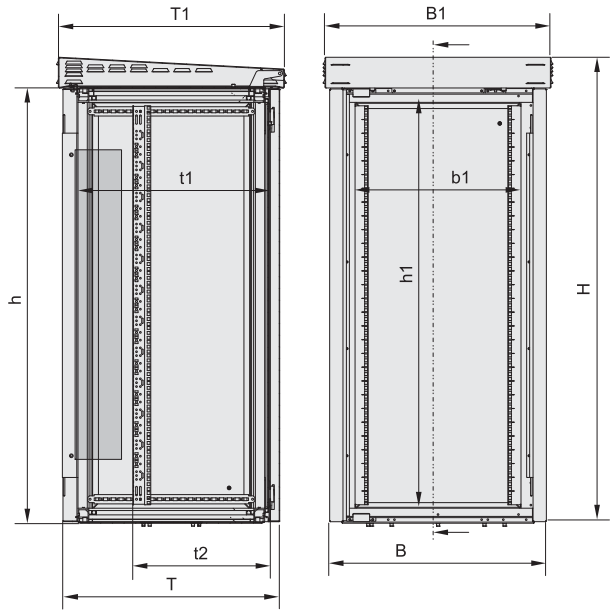

41605052

H *) mm	H U	B mm	T mm	h mm	b_1 mm	t_1 mm	t_2 mm	h_1 mm	B_1 mm	T_1 mm
1330	25	1300	600	1233	1136	500	350	1136	1330	630
1510	29	700	700	1408	536	600	450	1311	730	730
1510	29	1300	600	1408	1136	500	350	1311	1330	630

t_2 = max. 19" assembly dimension
*) height without base/plinth (base/plinth height 100 mm)

Calculation example at 70 W/K:

(Values as per ETS 300019-1-4 Class 4.1)
Internal temperature 50° C - external temperature 40° C = 10 K.
Up to 700 W of dissipation loss can thus be installed.
(70 W/K x 10 K)

ServicePLUS see page 1.330

- Aluminium profile frame with removable, double-walled cladding
- Forced heat dissipation via integrated heat exchanger in the door, max. 70 W/K
- IP 55
- Double-walled, Al
- Single door (for 700 mm width), double door (for 1300 mm width)

Delivery comprises (assembled)

Item	Qty	Description
1	1	Frame, screwed, Al
2	2	Double skin side panel, Al, inner untreated, outer external RAL 7035
3	1	Front door at 700 mm width, double door at 1300 mm width, Al, RAL 7035, 3-point locking, lever handle with DIN half profile cylinder, door opening angle 135°, door retainer at 120°, door hinged on left hand side
4	1	Double skin rear panel, Al, inner untreated, outer external RAL 7035
5	1	External top cover, Al, RAL 7035
6	1	Base/plinth with removable cover, height 100 mm
7	1	Base plate with cable connection plate, Al
8	4	Depth member for 19" metric panel/slide mounts
9	1	Earthing kit, assembled
10	1	Heat exchanger 48 V_{DC} (electronic control with alarm outputs), incl. temperature sensor and heater, DC connecting cable with IEC connector, 3 m

Order Information

Height U	Height mm	Width mm	Depth mm	q_W W/K	Part no.
25	1330	1300	600	70	10149-313
29	1510	700	700	70	10149-315
29	1510	1300	600	70	10149-316

q_W = specific heat dissipation capacity, average values

Technical dataheat exchanger

	WT 70
Dimensions (height x width x depth)	1010 x 465 x 150 mm
Heater (input voltage/capacity)	230 V_{AC}/1000 W
Specific heat dissipation capacity	70 W/K
Fans	2 pieces
Input voltage	48 V_{DC}
Airflow volume external loop	510 m^3/h
Airflow volume inner loop	600 m^3/h
Temperature range	-40 ... 50 °C
Type of protection	IP 55
Weight	21 kg

Note

- Please order panel/slide mounts separately, see page 1.328
- Equipment cable for heater in heat exchanger (230V_{AC}, IEC connector), see page 3.38

Metric panel/slide mounts

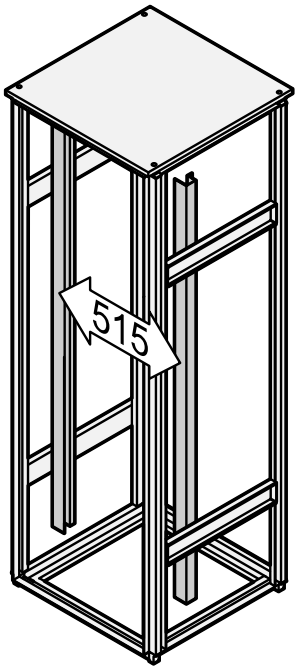

41001548

- For fixing metric chassis, subracks, distributor and filler panels to IEC 60917-2-1
- Modular version fixes direct to the frame or to the depth members; Unibody fixes to the depth members

Delivery comprises

Item	Qty	Description
1	2	Metric panel/slide mounts, bolt-on dimension 515 mm, St, 2 mm, AlZn
2	1	Assembly kit, incl. GND/earthing

Order Information

For cabinet height mm	Usable height SU	Length mm	AlZn Part no.
Partial-height mounting	16	400	24127-547
Partial-height mounting	21	525	24127-682
930	28	700	24127-686
1100	35	875	24127-689
1330	44	1100	24127-694
1510	51	1275	24127-697

Note

- Depth members and slide rails for partial-height mounting available on request

Cabinets – Outdoor - Accessories

19" panel/slide mounts

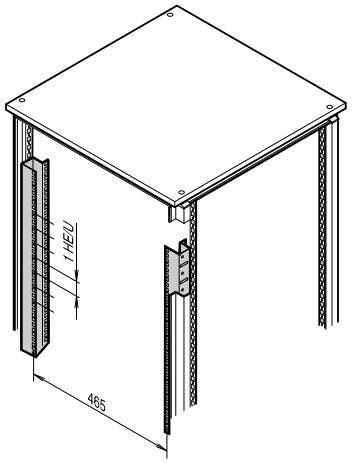

PLA45434

- For mounting of 19" chassis, subracks, distribution and filler panels in accordance with IEC 60297-3-100 (DIN 41 494, part 1)
- Assembled directly on the frame or on the depth member for the Modular, for Unibody assembly on depth member

Delivery comprises

Item	Qty	Description
1	2	19" panel/slide mount, St, 2 mm, RAL 7035/Al-Zn
2	1	Assembly kit, incl. GND/earthing

Order Information

For cabinet height mm	Usable height U	Length mm	Part no.
Partial-height mounting	9	400	**24127-370**
Partial-height mounting	12	533	**24127-484**
930	16	711	24127-485
1100	20	889	24127-487
1330	25	1111	24127-489
1510	29	1289	24127-491

Note

- Depth member for partial-height mounting available on request

Cabinets – Outdoor ServicePLUS

configuration

Simple. Fast. For the product you want.

Components can be varied and combined freely

- Enquiry form for outdoor cabinets
  - Various interior and exterior dimensions
  - Degree of protection
  - Determining of the cooling capacity
  - Cooling concept
- Online configuration: www.schroff.co.uk/configuration

solution

Simple. Fast. From one source.

Integration and custom developments

- Heat simulation on FloTHERM® model and calculations by experts
- Special sizes, customised solutions

academy

Knowledge. Sharing. Partnerships.

Knowledge transfer and partnership

- Seminars, white papers, CAD drawings, test reports, user reports

lifecycle

We are with you. For the entire product life.

Flexible support throughout the product lifecycle

- Delivery to point of use, installation service, exchange service, maintenance, repair, replacement parts, recycling

Cabinets – Outdoor ServicePLUS

41608003

Mobile telephony base station

- Mobile telephony base station with energy supply in one cabinet
- BTS connection via special cable routing in top element
- Based on the "modular" concept, the cabinet can be upgraded with various pre-defined "kits"
- Cooling either via fresh-air inlet (air filtered fan) or, in other cabinet variants, using an air conditioner

41608004

Mobile telephony power supply

- Cabinet for power supply to mobile telephony base stations
- Based on the "modular" cabinet concept with a special top panel design for cabling; can accept both 19" and 21" wide devices
- Heat exchanger in the front door
- AC/DC power distribution installed laterally beside 19" plane

41608005

Wimax

- Base station for Wimax applications
- "Unibody" concept with special base for easy assembly at installation site
- Fresh air inlet via air inlet filter
- Additional components such as cabinet heater and door contact switch factory preinstalled

Cabinets – Outdoor ServicePLUS

41608010

VDSL fixed network

- VDSL distribution cabinet
- Case based on a "modular" frame and double-walled outer cladding
- Cooling via controlled fans in case top panel. Airflow is only between the double walls; the device area remains sealed
- Separate stainless steel base with space for batteries and cable ducting

41608006

Battery cabinet

- Cabinet to power mobile telephony stations
- Based on the "modular" cabinet concept with the option of accommodating both 19" and 21" wide devices
- Direct cooling via fresh air introduced into the interior via an air filtered fan
- Fitting and connection of additional components e.g. smoke detector, door contact switch etc

41608007

Triple Play

- Distribution cabinet for fibre-optic cables (FTTN/FTTH)
- Ex works with power supply, backup batteries and safety devices
- Design outdoor "Modular"
- Combined cooling with air conditioner and additional internal air circulation

Cabinets – Outdoor ServicePLUS

41603016

Meteorology

- Compact, robust case for recording measured data in thunderstorms and strong winds
- Outdoor "Unibody" for mast mounting
- Climate control based on an additional fan in the gap between the dual walls
- A controllable heater can be added for use in freezing conditions

41608008

Voltage monitoring (railway)

- Voltage monitoring on overhead cables
- Construction based on "unibody" concept, for wall or mast mounting
- Energy-saving, noiseless cooling by convection between the double walls

41608009

Measurement technology on the rails

- Safety measurement device to detect the wheel temperature of passing trains
- Positioned very close to the tracks, thus requires robust vibration-proof design to IEC 61963
- Construction based on "modular" concept; the devices are mounted on a swing frame
- Heat dissipation via side-mounted air conditioner

Content

Cabinets 1

Wall mounted cases 2

Accessories for cabinets and wall mounted cases . 3

Climate control . 4

Electronics cases 5

Subracks/ 19" chassis 6

Front panels, plug-in units . . . 7

Systems 8

Power supply units 9

Backplanes . . . 10

Connectors, front panel component system 11

Appendix 12

Cabinets – *etsirack*

05601001 05601002

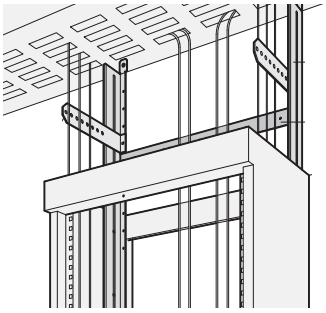

ETA43445

Top mounted cabling frame

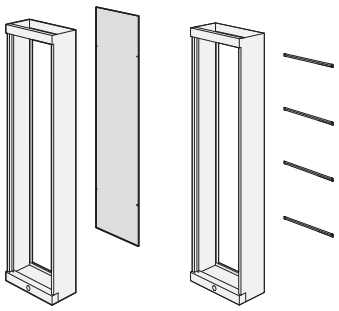

eta43459 05605051

Optionally either rear panel or cable supports can be used

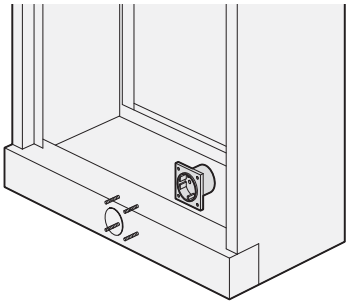

eta43449

Frame cover with integrated socket

Standards/certifications

- External and internal dimensions in accordance with:
  IEC 48D and ETS 300119
- Type of protection:
  IP 20 in accordance with: IEC 60529
- Protective GND/earthing connections in accordance with:
  DIN EN 50178 / PU 0160

Modifications

- Special colours
- Special sizes
- Customised solutions

Metric frame for public and private telecommunication networks

- In accordance with standards IEC 48 D and ETS 300 119
- Static load-carrying capacity up to 200 kg
- Top mounted cabling frame
- Back-to-back row layout is possible

05605001

Cabinet from stock

- With perforated front door
- Can be completed on the rear either with rear panel or cable supports

30407004

ServicePLUS from page 1.352

e.g. modifications (cut-outs, special colours)
e.g. custom solutions (special sizes)

www.schroff.biz/ServicePLUS

etsirack
Frames 1.348
Mounting kit for back-to-back row layout 1.349
Rear panel 1.349
Cable support 1.349
Top mounted cabling frame 1.350
Mounting socket etsirack 1.350
Metric cable support 1.351
19" adaptors 1.351

ServicePLUS ... 1.352
Application examples. 1.353

etsirack frame

- Welded rack with metric grid hole spacing to ETS 300119-3
- Static load-carrying capacity 200 kg
- Mounting height 81 SU (1 SU = 25 mm)

Delivery comprises (assembled)

Item	Qty	Description
1	1	Frame, St, 2 mm, RAL 7035
2	1	Front door with perforation, St, 1.5 mm, RAL 7035 with safety lock incl. 2 keys, GND/earthing
3	4	Adjustable feet, St, zinc-plated, polyamide black
4	1	Base/plinth, St, 2 mm, RAL 7035
5	1	Blanking plug, polyamide, white, for socket cut-out

Order Information

Height mm	Width mm	Depth mm	Qty	Part no.
2200	600	300	PU = 1 piece on a palette	**10125-010**
2200	600	300	PU = 2 pieces on a palette	**10125-011**
Side-by-side mounting kit etsirack PU 1 kit				**21190-793**
Mounting socket etsirack SCHUKO, 230 V/16 A, white, 1 piece				**21101-360**

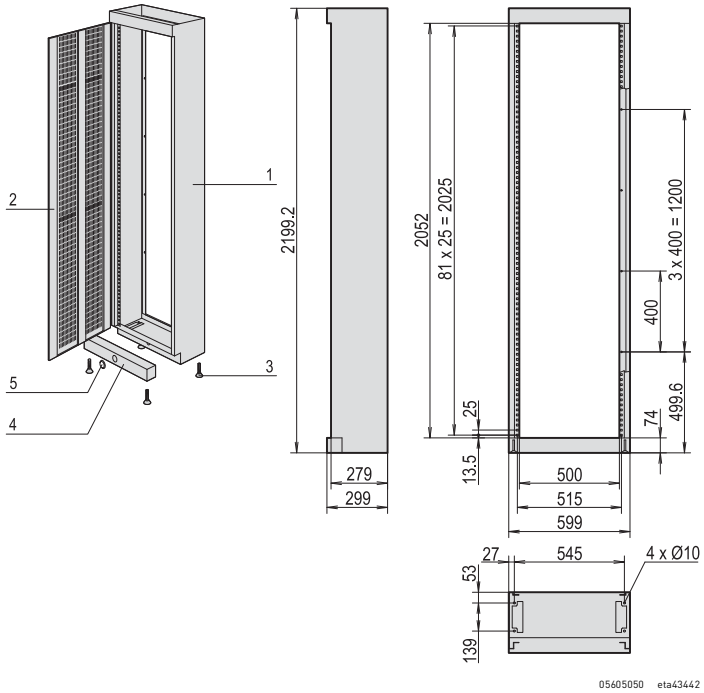

ServicePLUS see page 1.352

Cabinets – etsirack

Mounting kit etsirack for back-to-back row layout

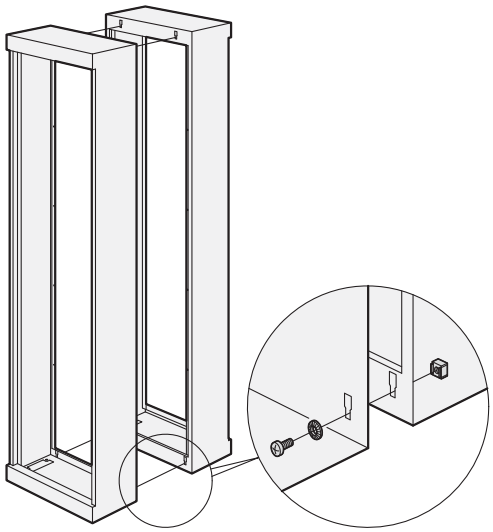

ETA43447

- For back-to-back mounting of two frames

Delivery comprises

Item	Qty	Description
1	4	GND/earthing cage nut, washer, 1 screw M6 x 12

Order Information

Description	Part no.
Mounting kit etsirack for back-to-back row layout	**21190-793**

Rear panel

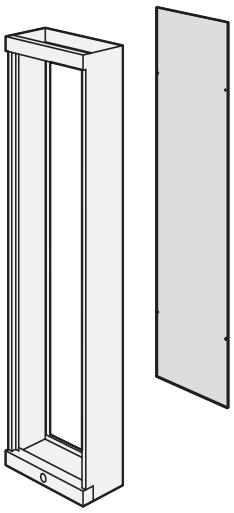

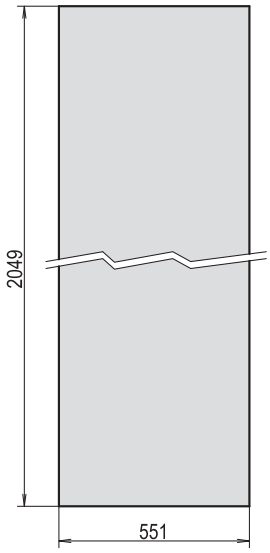

eta43459 eta43444

Delivery comprises

Item	Qty	Description
1	1	Rear panel, St, 1 mm, RAL 7035
2	1	GND/earthing kit (Cu wire 4 mm^2 green/yellow)
3	1	Assembly kit

Order Information

Description	Part no.
Rear panel	**20125-021**

Cable support

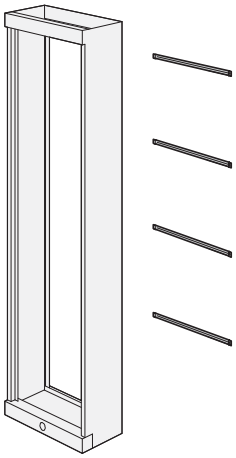

05605051

- Cable supports may be used in the etsirack in place of a rear panel

Delivery comprises

Item	Qty	Description
1	4	Cable support, St, 2 mm, RAL 7035
2	1	Assembly kit

Order Information

Description	Part no.
Cable support	**20125-006**

Top mounted cabling frame

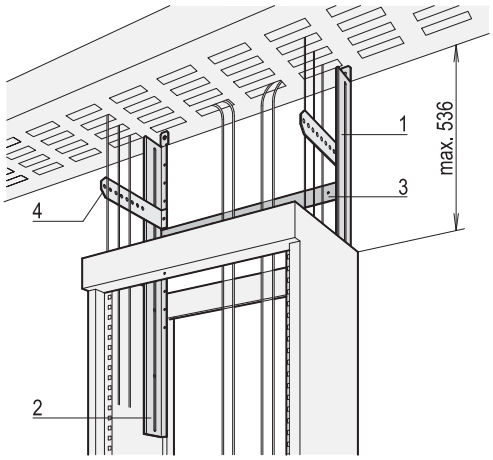

ETA43445

- Extension length of the sliding bars on right and left: max. 536 mm

Delivery comprises (Kit)

Pos.	Menge	Beschreibung
1	1	Sliding bar on the right, St, 3 mm, zinc-plated
2	1	Sliding bar on the left, St, 3 mm, zinc-plated
3	1	Mounting rail, St, 3 mm, zinc-plated
4	2	Cable retention rail, St, 3 mm, RAL 7035
5	1	Assembly kit

Order Information

Description	Part no.
Top mounted cabling frame	20125-005

Mounting socket etsirack

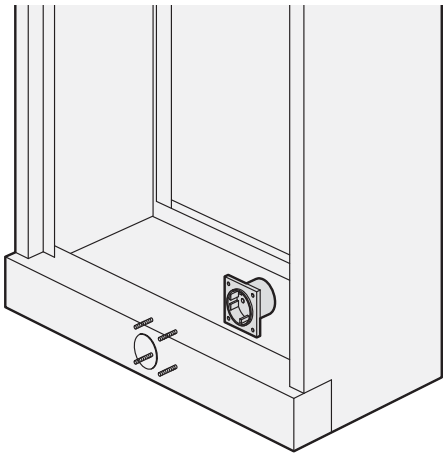

ETA43449

- SCHUKO, 230 V_{AC}, 16 A

Delivery comprises

Item	Qty	Description
1	1	Mounting socket, SCHUKO, white
2	1	Assembly kit

Order Information

Description	Part no.
Mounting socket etsirack	21101-360

Cabinets – etsirack

Metric equipment shelf

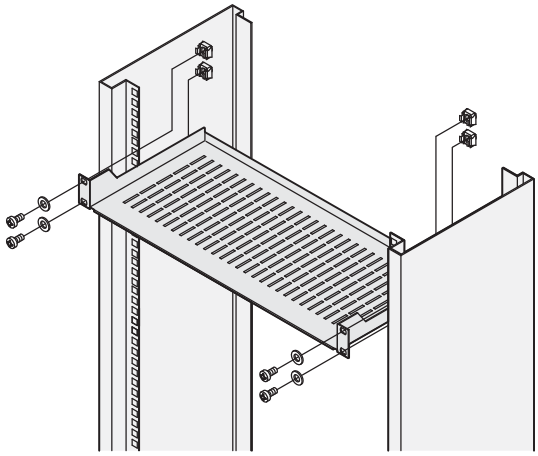

05601501

- For the installation in metric frames (assembly dimension 515 mm)
- Load carrying capacity 10 kg
- Mounting height 49 mm

Delivery comprises

Item	Qty	Description
1	1	Equipment shelf, St, 1.5 mm, RAL 7035
2	1	GND/earthing material
3	1	Assembly kit

Order Information

Width mm	Depth mm	Part no.
497	222	**20118-686**

19" adaptor

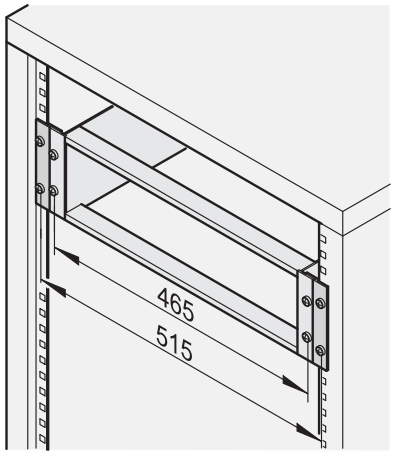

bza44292

- The 19" adaptor allows 19" components to be installed in the metric etsirack
- Equal clearances are obtained above and below between the 19" adaptor and the metric height increments

Delivery comprises

Item	Qty	Description
1	2	19"/metric adapter, Al extrusion, clear chromated
2	1	Assembly kit

Order Information

Height U	Clearance mm	Part no.
3	above/below 8.8 mm each	**20838-084**
6	above/below 4.6 mm each	**20838-086**
45	none	**20125-018**

Note

- Assembly dimensions and clearances see Internet

Cabinets – *etsirack* ServicePLUS

modification

Small changes. Large impact.

Custom drillings, cut-outs and special colours for off-the-shelf products

- Special colours

solution

Simple. Fast. From one source.

Integration and custom developments

- Complete construction,cabling, function testing
- Special sizes, custom solutions

lifecycle

We are with you. For the entire product life.

Flexible support throughout the product lifecycle

- Free delivery to point of use

Cabinets – etsirackServicePLUS

ServicePLUS: Solution - Project examples

French Telecom

- With perforated front door
- Special top mounted cabling frame

German Telecom

- Front door drawn out for more space
- Rear panel included
- Lever handle instead of safety lock

Content

Cabinets 1
Wall mounted cases 2
Accessories for cabinets and wall mounted cases . 3
Climate control . 4
Electronics cases 5
Subracks/ 19" chassis 6
Front panels, plug-in units . . . 7
Systems 8
Power supply units 9
Backplanes . . . 10
Connectors, front panel component system 11
Appendix 12

Cabinets – 19" lab racks

01305003

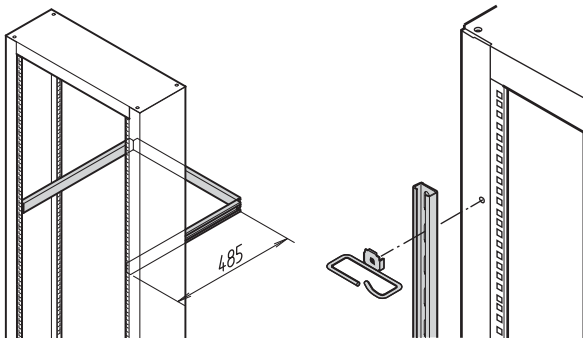

lra45330 vnt007

Cable ducting on the front and rear side

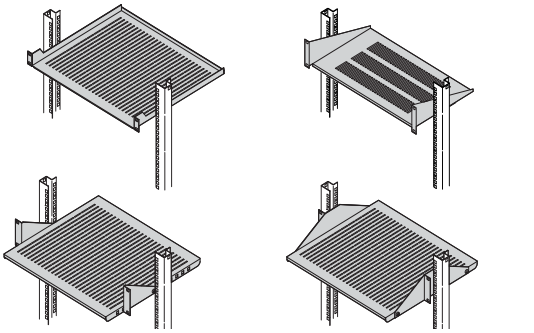

01505050

Large selection of equipment shelves

Application/function

19" lab racks are freely accessible from all sides. Subracks, 19" cases and 19" shelves can be mounted. Two angled steel uprights are screw-fixed on the base part (mobile base/plinth and base plate respectively). The 19" cut-outs of the steel uprights are recessed so far that a flat surface for front panels is created. At the top, the two profiles are connected by a cover plate which gives the rack additional stability.

The base/plinth of the mobile 19" lab rack has two fixed rear castors and two locking castors at the front. The 100 mm roller diameter ensures both good mobility and high stability.

A base plate from sheet steel forms the plinth for the stationary 19" lab rack.

Standards/certifications

- Internal and external dimensions in accordance with: IEC 60297-3-100

19" lab rack

- Mobile or stationary
- Various shelves
- Accessories for cable ducting

01305001

Mobile

- 36 U
- Load-carrying capacity up to max. 200 kg

01305002

Stationary

- 24 and 39 U
- Load-carrying capacity up to max. 150 kg

30407004

ServicePLUS from page 1.361

e.g. modification (special colours)
e.g. custom solutions (special sizes)

www.schroff.biz/ServicePLUS

19" lab racks
19" lab rack, mobile 1.356
19" lab rack, stationary 1.357
Panel mounts 1.358
Cable support rail 1.358
C-profiles 1.359
Cable eyes for C-profile 1.359
19" equipment shelves 1.361
Slide rails 1.361

ServicePLUS ... 1.361

Cabinets – 19" lab racks

19" lab rack, mobile

- Stationary load-carrying capacity 200 kg at a defined centre of gravity in the centre of the lab rack
- Recommended max. chassis depth 400 mm

Delivery comprises (assembled)

Item	Qty	Description
1	1	19" frame, St, 2 mm, RAL 7035, with EIA cut-outs
2	1	Mobile base/plinth, Al, die-cast, RAL 7035
3	2	Castor, plastic (PA), with rubber insert
4	2	Locking castor, plastic (PA), with rubber insert

Order Information

Description	Part no.
19" lab rack, mobile, useable height 36 U	10117-498
19" assembly kit (50 x screws, 50 x washers, 50 x nuts)	21101-809
19" assembly kit (100 x screws, 100 x washers, 100 x nuts)	21101-810

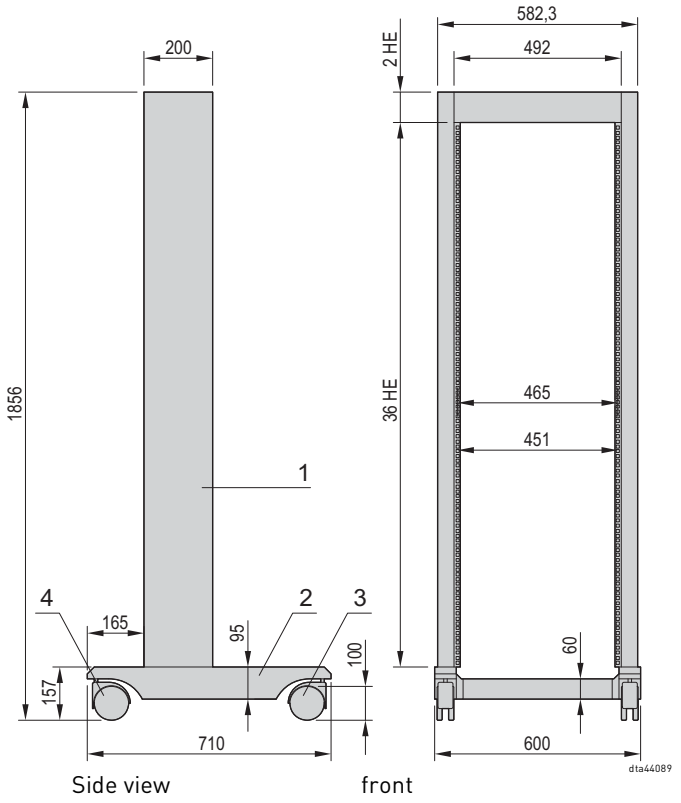

ServicePLUS see page 1.361

Cabinets – 19" lab racks

19" lab rack, stationary

01305002

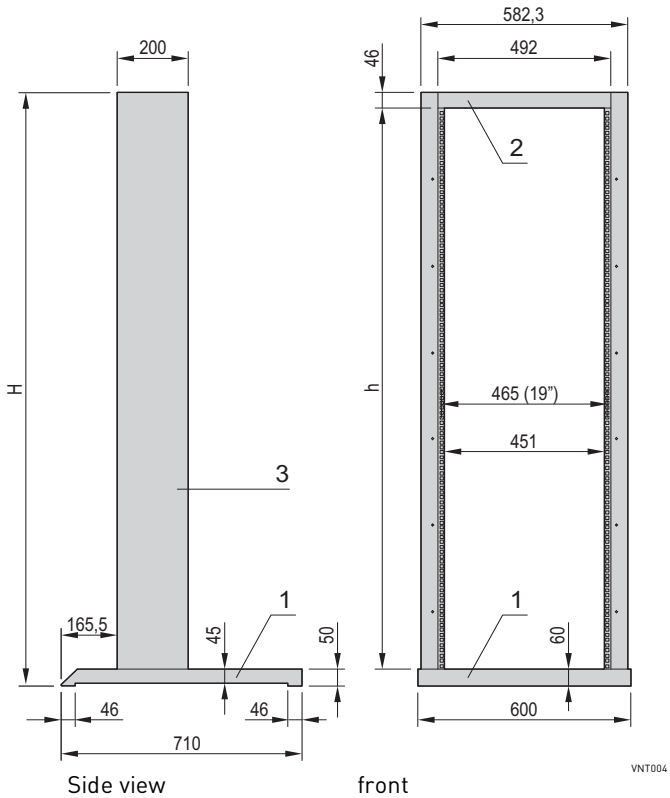

Side view front

- Modular design with base/plinth and cover plate, please order uprights according to desired height separately
- Stationary load-carrying capacity 150 kg, at a defined centre of gravity in the centre of the lab rack
- Recommended max. chassis depth 400 mm

Delivery comprises (kit)

Item.	Qty	Description
1	1	Base/plinth, St, 2 mm, RAL 7035
2	1	Trim at top, St, 1.5 mm, RAL 7035
4	1	Assembly kit

Order Information

Description	Item	Part no.
Base and trim	1 + 2 + 4	**20118-743**
Uprights (item 3) with EIA perforation, 24 U, RAL 7035, PU 2 pieces		**20118-741**
Uprights (item 3) with EIA perforation, 39 U, RAL 7035, PU 2 pieces		**20118-742**
Adjustable feet load-carrying capacity 100 kg per foot, PU 4 pieces		**21190-571**
Castors load-carrying capacity 150 kg per kit, castor diameter 52 mm, PU 4 pieces (2 locking, 2 non-locking)		**20118-462**
19" assembly kit (50 x screws, 50 x washers, 50 x nuts)		**21101-809**
19" assembly kit (100 x screws, 100 x washers, 100 x nuts)		**21101-810**

Technical data

Usable height	h	H
U	mm	mm
24	1067	1164
39	1733	1831

Note

- Please order uprights separately

ServicePLUS see page 1.361

Cabinets – 19" lab racks

Panel mounts for stationary 19" lab rack

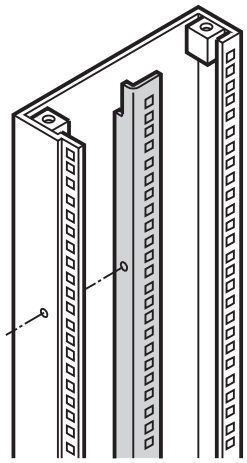

VNT011

- Required for fitting of cable retention rails or slide rails on stationary 19" lab rack

Delivery comprises

Item	Qty	Description
1	2	Panel mount without assembly kit, St, 1.5 mm, RAL 7035

Order Information

Description	Height U	Part no.
Panel mount	24	**20118-744**
Panel mount	39	**20118-745**
Assembly kit PU 1 kit		**21101-175**

Note

- Please order assembly kit separately

Cable support rail

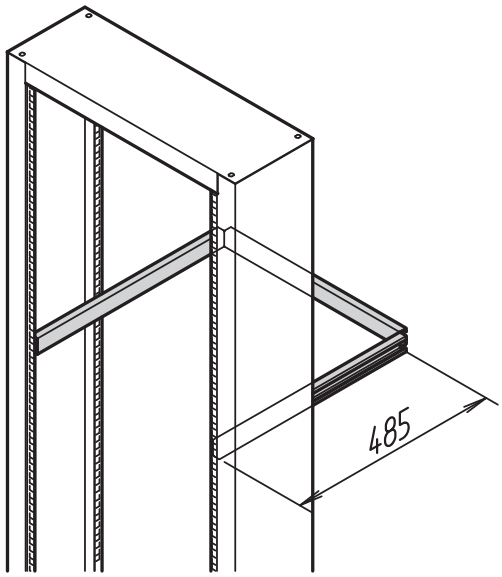

LRA45330

- For cable ducting and cable strain relief
- Designed for mobile 19" lab rack;
  with panel mounts also for stationary 19" lab rack

Delivery comprises (Kit)

Item	Qty	Description
1	3	C-profile, St, 1.5 mm, zinc-plated
2	2	Corner piece, St, 2 mm, zinc-plated
3	1	Assembly kit

Order Information

Description	Part no.
Cable support rail	**20118-460**

Note

- Panel mounts are necessary for assembly on stationary 19" lab racks, please order them separately

Cabinets – 19" lab racks

C-profile for stationary 19" lab rack

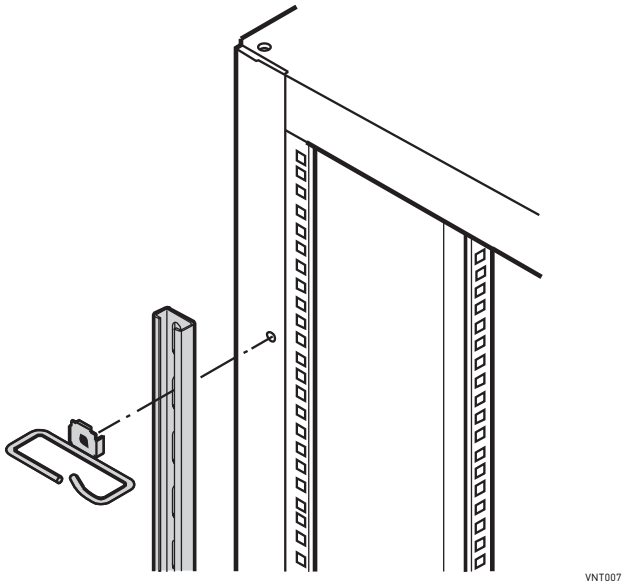

- For assembly to the vertical uprights on the right and left hand side of the 19" plane; especially suited for cable eyes

Delivery comprises

Item	Qty	Description
1	2	C-profile, St, 1.5 mm, zinc-plated

Order Information

Height U	Length mm	Part no.
24	1050	**20118-461**
39	1650	**22114-461**
Assembly kit PU 1 kit		**21101-175**

Note

- Please order assembly kit separately
- Not suitable on mobile 19" lab racks

Cable eyes for C-profile

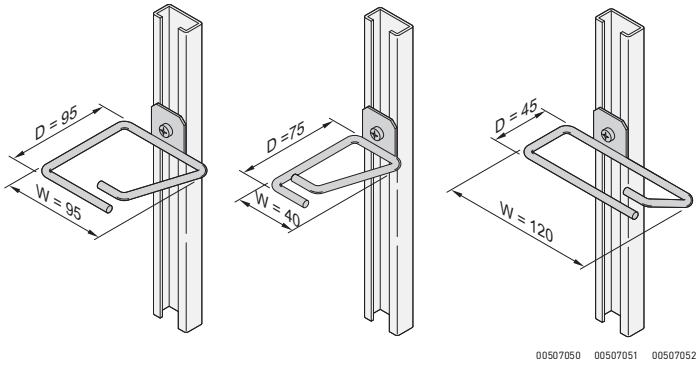

Delivery comprises

Item	Qty	Description
1	4	Cable eye, round steel, 6 mm, zinc-plated, with integrated anti-rotation protection

Order Information

Description	W mm	D mm	Part no.
Cable eye for C-profile	120	45	**20118-339**
Cable eye for C-profile	40	75	**20118-554**
Cable eye for C-profile	95	95	**20118-340**
Assembly kit for 4 cable eyes, PU 1 kit			**21101-596**

Note

- Please order assembly kit separately

Cabinets – 19" lab racks

19" equipment shelf, 1 U

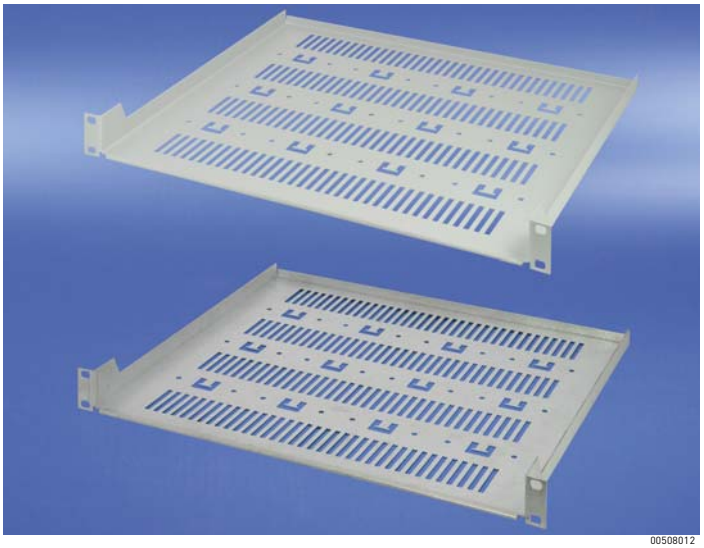

- Static load-carrying capacity 5 kg
- Mounting height 1 U

Delivery comprises

Item	Qty	Description
1	1	Equipment shelf, St, 1.5 mm

Order Information

Width mm	Depth mm	AlZn Part no.	RAL 7035 Part no.
447	390	**20118-781**	**20118-783**
19" assembly kit (screw, washer, nut) for one equipment shelf			**21190-095**

19" equipment shelf, 2 U

- Static load-carrying capacity 10 kg
- Mounting height 2 U

Delivery comprises

Item	Qty	Description
1	1	Equipment shelf, St, 1.5 mm

Order Information

Width mm	Depth mm	RAL 7035 Part no.
447	238	**20118-785**
19" assembly kit (screw, washer, nut) for one equipment shelf		**21190-095**

19" equipment shelf, depth-adjustable, 2 U

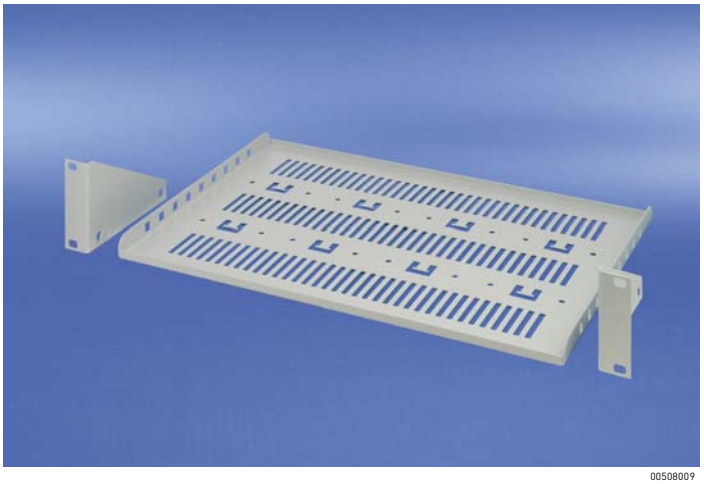

- Static load-carrying capacity 15 kg
- Mounting height 2 U
- Depth-adjustable in 25 mm increments (front protrusion min. 26 mm)

Delivery comprises (kit)

Item	Qty	Description
1	1	Equipment shelf, St, 1.5 mm
2	2	Mounting bracket with assembly kit, St, 1.5 mm

Order Information

Width mm	Depth mm	RAL 7035 Part no.
430	250	
430	300	**20118-790**
430	400	**20118-791**
19" assembly kit (screw, washer, nut) for one equipment shelf		**21190-095**

Cabinets – 19" lab racks

19" equipment shelf with front protrusion, 2 U

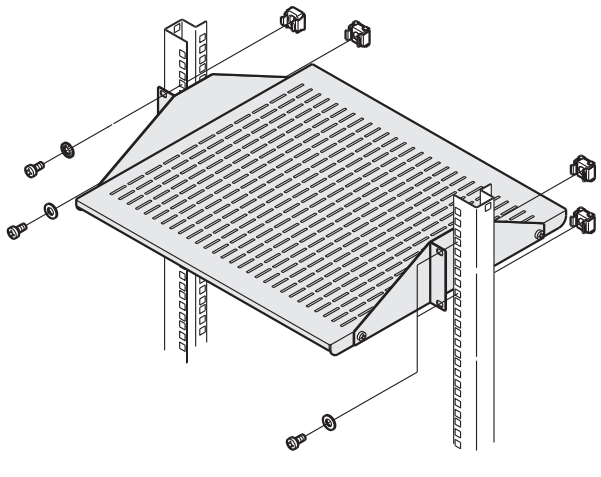

- Static load-carrying capacity 25 kg
- Mounting height 2 U
- Forward protrusion min. 168 mm

Delivery comprises (kit)

Item	Qty	Description
1	1	Equipment shelf, St, 1.5 mm, RAL 7035
2	2	Mounting bracket, strengthened, St, 2/2.5 mm, RAL 7035
3	1	Assembly kit incl. GND/earthing kit

Order Information

Width mm	Depth mm	Part no.
430	400	**20119-257**

Slide rail, 40 kg

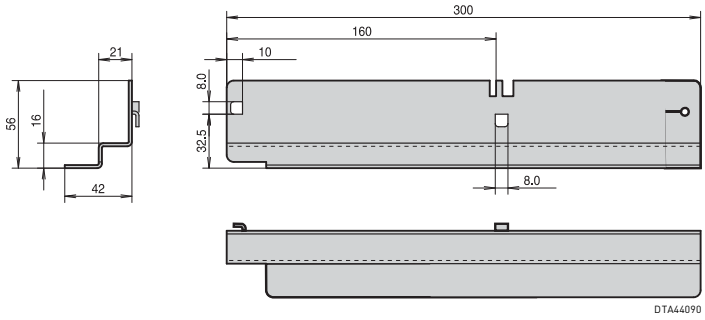

- For assembly on mobile 19" lab racks; with panel mounts also on stationary 19" lab racks
- Static load-carrying capacity 40 kg per pair

Delivery comprises

Item	Qty	Description
1	2 / 10	Slide rail, St, 2 mm, zinc-plated

Order Information

Description	Qty/PU	Part no.
Slide rail, 40 kg	2	**20119-080**
Slide rail, 40 kg	10	**20119-106**

Note

- Panel mounts are necessary for assembly on stationary 19" labrack, please order separately, see page 1.358

modification

Custom drillings, cut-outs and special colours for off-the-shelf products

Small changes. Large impact.

- Special colours

solution

Integration and custom developments

Simple. Fast. From one source.

- Complete construction,cabling, function testing
- Special sizes, custom solutions

lifecycle

Flexible support throughout the product lifecycle

We are with you. For the entire product life.

- Free delivery to point of use

Content

Cabinets 1

Wall mounted cases 2

Accessories for cabinets and wall mounted cases . 3

Climate control . 4

Electronics cases 5

Subracks/ 19" chassis 6

Front panels, plug-in units . . . 7

Systems 8

Power supply units 9

Backplanes . . . 10

Connectors, front panel component system 11

Appendix 12

Cabinets – Hoffman PROLINE

41003002

41096005

Mounting pitch

41096010

Assembly in accordance with ETSI/ 19" standard

41097003

PC cabinet

Standards/certifications

- Exterior and interior dimensions in accordance with IEC 60297, part 1 and 2 IEC 60917-2-1
- Interior dimensions in accordance with ETS 300119, Part 2
- Protective GND/earthing connections in accordance with DIN EN 50178 / PU 0160

Industrial standards

- Gasketed assembled enclosure:
  UL 508A listed; Type 12; File Number E61997
  cUL listed per CSA C22.2 No 94; Type 12;
  File Number E61997,
  NEMA/EEMAC Type 12, CSA File Number 42186:
  Type 12,
  VDE IP 55, IEC 60529, IP 55
- EMC assembled enclosure:
  UL 508A listed; Type 1; File Number E61997,
  cUL listed per CSA C22.2 No 94; Type 1;
  File Number E61997,
  NEMA/EEMAC Type 1,
  IEC 60529,
  IP 30

Cabinets – Hoffman PROLINE

Hoffman PROLINE industrial cabinets

- Electrical cabinet and PC cabinet with high stability and ingress protection to IP
- Welded steel frame with 25 mm increments
- Interior mounting in accordance with 19" or ETSI standard possible
- Static load-carrying capacity 600 kg

41098005

Electronics cabinet

41003001

Electrical cabinet

41097004

PC cabinet

Ordering

Hoffman PROLINE industrial cabinets can be supplied in any of the following ways to best suit your needs:

- Assembled enclosures
  - Hoffman PROLINE enclosures are available preconfigured for computer system (PROLINE PC) applications, HMI (PROLINE SY) applications, industrial applications and double-door disconnect (PROLINE DD) applications. These options allow you to select a complete system that includes the frame, side panels, top, base, doors and interior mounting accessories by simply ordering one part number.
- Customer-specific assemblies
  - Assemble-to-order (A-T-O) programme. Configure your industrial cabinet. Customers can configure an individual cabinet ex stock from a set range of individual components, at no extra cost
- Individual components
  - If your process is better-suited to receiving individual Hoffman PROLINE parts and completing the assembly yourself, we can accommodate you. Frames and individual components are available for shipment from our warehouse or distributor stock.

ServicePLUS

- A-T-O (Assemble-to-order): Configuration and assembly of Hoffman PROLINE cabinets (IP 55)
- Detailed documentation and order tables on the Internet under www.schroff.biz/proline
- Further information see Hoffman industrial catalogue www.schroff.biz/industrial

Overview 1.362
Overview Cabinets 1.0
VARISTAR 1.2
VARISTAR Electronics 1.10
VARISTAR EMC .. 1.54
VARISTAR Seismic 1.84
VARISTAR MIL ... 1.120
VARISTAR Datacom and Networking Technology 1.124
VARISTAR Aisle Containments 1.202
VARISTAR Air/ water heat exchanger 1.224
eurorack 1.270
NOVASTAR 1.240
Outdoor 1.316
Hoffman Open Frame Racks ... 1.334
etsirack 1.346
Lab racks 1.354
Cabinet Accessories 3.0

Cabinets – On Board Rack

On-board rack

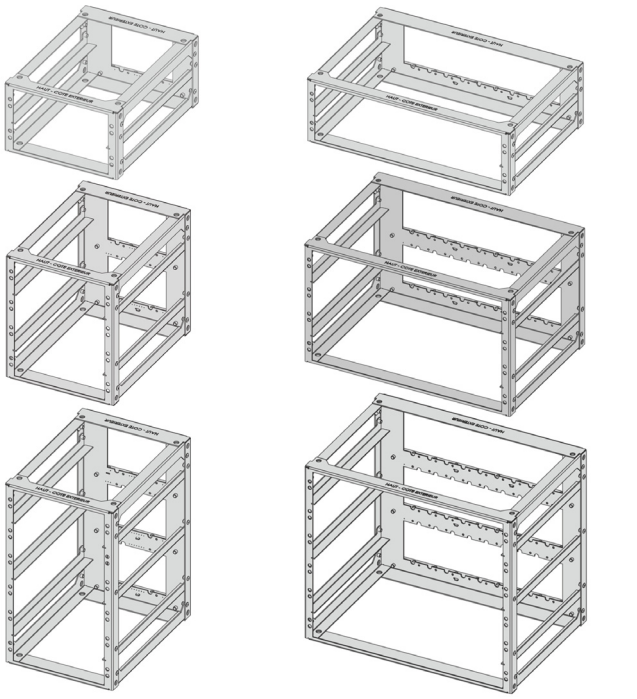

- For mobile railway applications
- Suitable for ongoing vibrations, shock, high temperatures, and high humidity
- Height 3, 6, and 9 U, width 36 and 84 HP, depth 341.8 mm
- Suitable for 1, 2, or 3 U SNCF subracks (NF F61-005, CF 60-002)
- Rear side is equipped for standard connectors; crossbar can be custom-coded for the SNCF coding pins
- Crossbar with integrated cable channel
- Several racks can be stacked or fitted in rows
- Produced using a welding process, certified to EN 15085 (CL2)

Delivery includes

Item	Qty.	Description
1	1	Welded rack, St, stainless steel, 2 mm, rear middle crossbar
2	1	User manual

Order Information

Height U	Width HP	Depth mm	Part no.
3	36	341.8	10170-015
3	84	341.8	10170-014
6	36	341.8	10170-013
6	84	341.8	10170-012
9	36	341.8	10170-017
9	84	341.8	10170-016
Accessories			
Joining and stacking kit for on-board rack PU, 1 set (4 screws, 8 nuts, 4 washers)			20170-042
Mounting kit for on-board rack PU, 1 set (8 x screw M6x30, 8 x clip cage nut)			**21120-205**
Mounting kit for on-board rack PU, 1 set (50 x screw M6 x 30, 50 x clip cage nut)			**21120-206**
Mounting kit for on-board rack PU, 1 set (100 x screw M6 x 30, 100 x clip cage nut)			**21120-207**

Cabinets – On-board rack

Joining and stacking kit for on-board rack

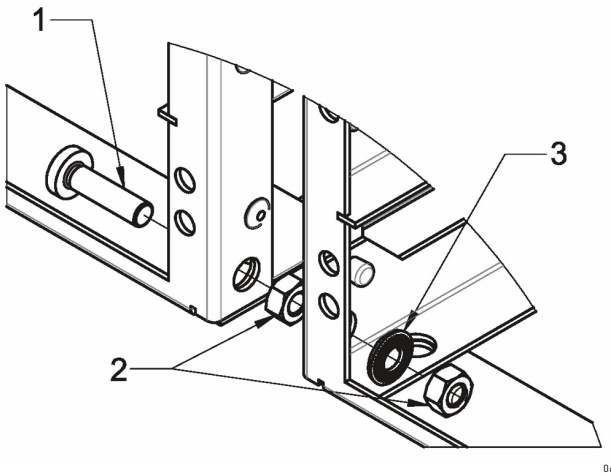

06717050

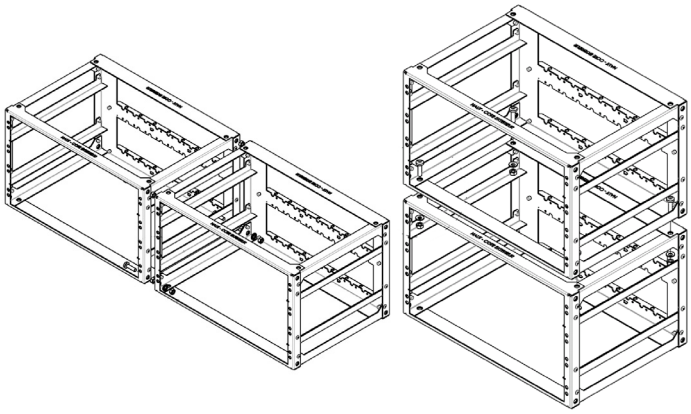
06717051

06717052

- Assembly kit, suitable for joining or stacking on-board racks

Order Information

Description	Description	Part no.
Joining and stacking kit for on-board rack	PU, 1 set (4 screws, 8 nuts, 4 washers)	20170-042

Mounting kit for on-board rack

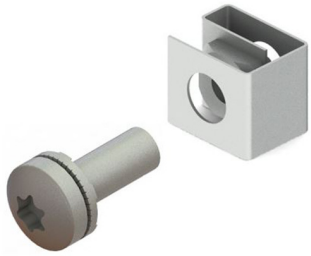
00517001

- For mounting electronic components on the on-board rack
- To ensure standards-compliant grounding at at least one mounting point, use a grounding cage nut and a Nomel washer

Delivery includes

Item	Description
1	Panhead screw, M6 x 30, St, zinc-plated
2	Clip cage nut, M6, St, zinc-plated

Order Information

Description	Qty/PU piece	Part no.
Mounting kit for on-board rack	8	**21120-205**
Mounting kit for on-board rack	50	**21120-206**
Mounting kit for on-board rack	100	**21120-207**

Cabinets 1
Wall mounted cases 2
Accessories for cabinets and wall mounted cases . 3
Climate control . 4
Electronics cases 5
Subracks/ 19" chassis 6
Front panels, plug-in units . . . 7
Systems 8
Power supply units 9
Backplanes . . . 10
Connectors, front panel component system 11
Appendix 12

For robust industrial environments up to IP 66

epcase

Distributor and network case for 10" and 19" applications
With hinged side panels
Steel, IP 20

36108001 (41102004, 41105001, 41107004, 41107005, 41505001, 40505001, 40505002)

Overview 0.0

For data and network systems

epcase 2.24

LAN wall mounted 2.36

Cabinet Accessories ... 3.0

For data and network systems

LAN wall mounted enclosure

Ideal for fibre optics applications or as copper small distributor, retrofittable with side-by-side modules
Steel, IP 20

36108002 (01505002, 01505008, 41801001, 41801017)

Content

Wall mounted cases – epcase

Cabinets 1
Wall mounted cases 2
Accessories for cabinets and wall mounted cases . 3
Climate control . 4
Electronics cases 5
Subracks/ 19" chassis 6
Front panels, plug-in units . . . 7
Systems 8
Power supply units 9
Backplanes . . . 10
Connectors, front panel component system 11
Appendix 12

01505008

01506002

Hinged side panels for easy access

01505003

Optimum space utilisation due to an additional vertical 19" plane; fans retrofittable

Standards

- Type of protection IP 20 IEC 60529

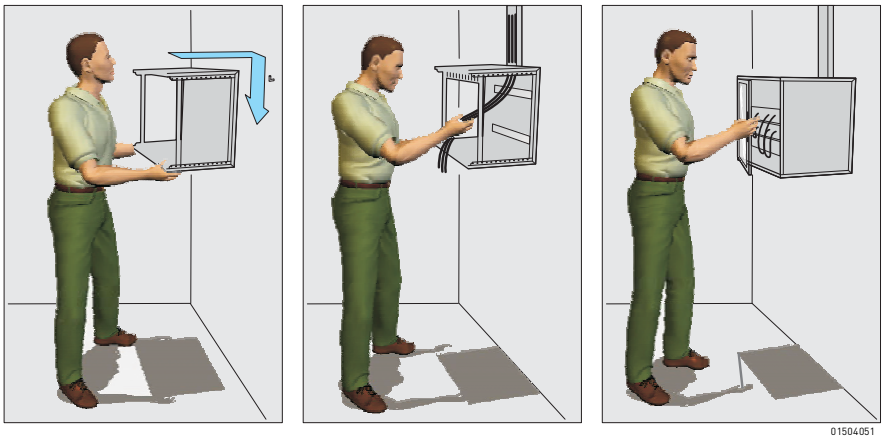

01504051

Simple design and assembly: mounting, wiring, cladding

Wall mounted cases – epcase

Overview 2.24

Low-cost wall mounted case

- Hinged side panels for easy access
- Completely pre-assembled
- Optimum space utilisation through depth-adjustable 19" slide mounts and an additional vertical 19" plane
- Type of protection IP 20

01506001

epcase 19"

- 19" assembly from 9 ... 20 U

01505006

epcase 10"

- 10" assembly from 4 ... 12 U

30407004

ServicePLUS from page 2.46

e.g. special colours, special sizes
e.g. air conditioning
e.g. fittings, conversions, cut-outs
e.g. custom solutions

www.schroff.biz/ServicePLUS

epcase 19"
19" wall mounted case 2.26
Fan 2.27
Protective grille .. 2.27
Air filter 2.28
Lever handle 2.28
19" equipment shelf 2.29
Modem shelf 2.30
Vertical 19" plane 2.30
Cable eye 2.31
Cable support rail 2.31
Short slide rail ... 2.31

epcase 10"
10" wall mounted case 2.32
Air filter 2.33
Equipment support 2.33
10" front panel ... 2.34
10" distribution field 2.34
10" socket strip 1 U, SCHUKO 2.35

ServicePLUS ... 2.46

19" wall mounted case

- Multi functional 19" wall case with hinged side panels
- Cable entry possible from above or below;
  the cable entry opening can be sealed with two brush strips each, resp. can be used to assemble fan
- Cable support rail is included and is adjustable in 25 mm increments
- 19" panel/slide mounts are depth-adjustable in 25 mm increments
- Type of protection IP 20

Delivery comprises (assembled)

Item	Qty	Description
1	1	Basic case, C form, St, 2 mm, RAL 7021
2	1	Glazed door with key/lock (key no. 2233), door handle cut-out S2100, frame, St, 1.5 mm, RAL 7035, Sekurit glass 4 mm
3	2	Side panel, St, 1.5 mm, RAL 7035
4	1	Cable support rail, St, RAL 7035
5	2	19" slide mounts, St, 2 mm, finish AlZn
6	2	Brush strip (to cover cable entry opening)
7	1	Assembly kit for wall mounting

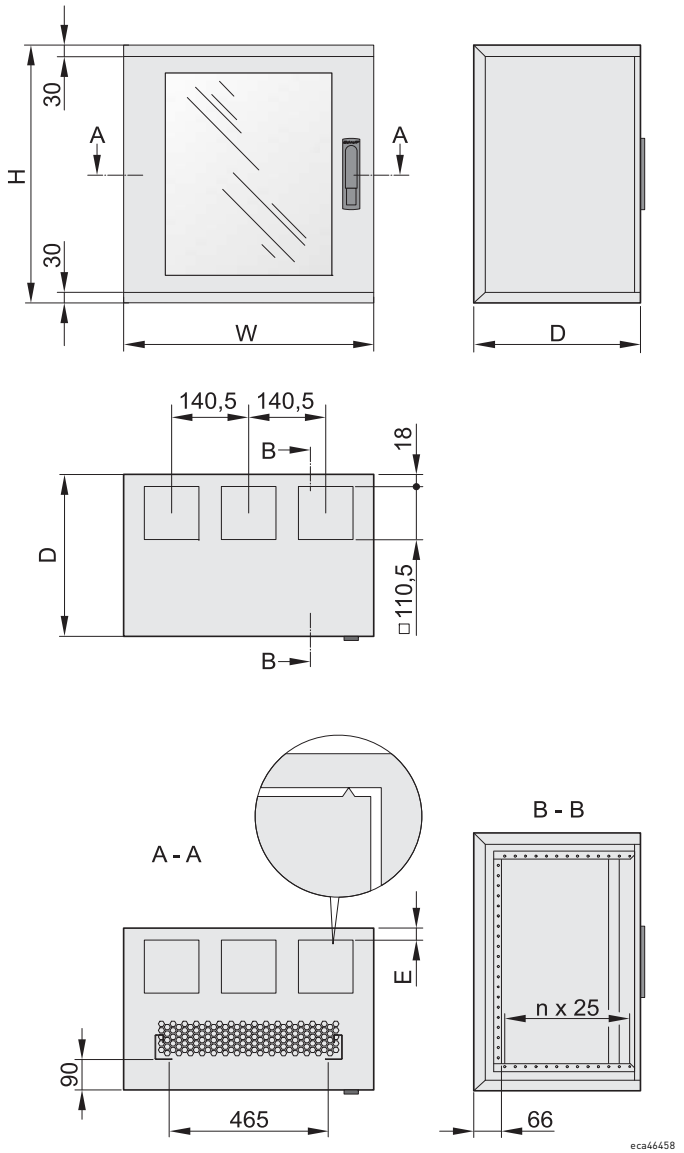

Order Information

Height	Height	Width	Depth		Weight	Load-carrying capacity	Part no.
U	mm	mm	mm	mm	kg	kg	
9	487	600	300	18	18	60	10236-151
9	487	600	400	18	20	35	10236-152
12	612	600	400	18	24	35	10236-156
12	612	600	500	85	25	30	10236-157
16	812	600	400	18	28	35	10236-160
16	812	600	500	85	30	30	10236-161
16	812	600	600	85	32	25	10236-162
20	962	600	500	85	34	30	10236-165
20	962	600	600	85	38	25	10236-166
GND/earthing, PU 1 kit							21236-097
Brush strip, 1 piece							21236-094
Feet, plastic, black, PU 4 pieces							21236-089
Cable shell for cable bundle 30 ... 34 mm, PU 10 pieces							20114-728
Cable tie 92 mm x 2.5 mm, PU 25 pieces							20118-351
19" assembly kit (screw, washer, nut) (32 x M6 screws x 16, 32 x plastic washers, 32 x cage nuts)							21190-435

Note

- Lever handle for single point locking with DIN profile half cylinder is retrofittable, see page 2.28

ServicePLUS see page 2.46

Wall mounted cases – epcase

Fan with covering grille, 230 V_{AC}

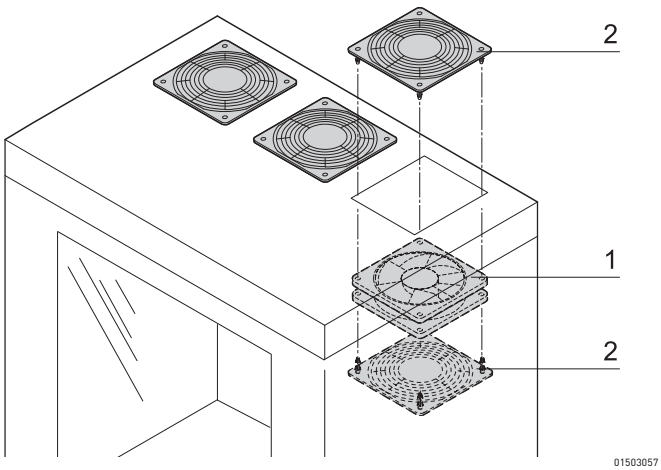

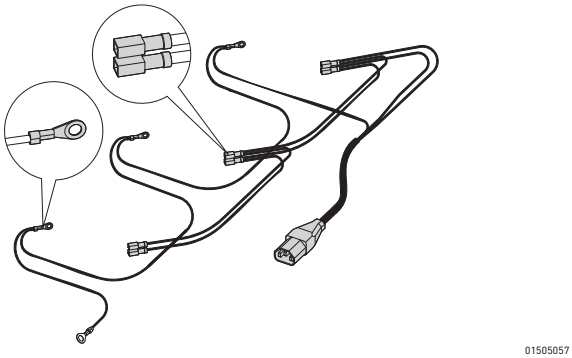

Connecting cable and earthing for 1 ... 3 fans

- For assembly in cable ducting openings (top/bottom)
- Assembly of fan by clipping in protective grilles
- Connect up to 3 fans via separate connecting cable

Delivery comprises

Item	Qty	Description
1	1	230 V_{AC} fan, dimensions 38 x 119 x 119 mm
2	2	Protective grille, plastic, black

Order Information

Description	Part no.
Fan with covering grille, 230 V_{AC}	21236-092
Connecting cable for 1 ... 3 fans IEC-320 male connector, 1 piece	21236-099
Thermostat with mains/line connector, 230 V_{AC}, SCHUKO/ UTE connector, IEC-320 female connector, 1 piece	20118-750

Technical data

Frequency	50 Hz	60 Hz
Voltage	230 V_{AC}	230 V_{AC}
Air volume, unrestricted	162 m^3/h	192 m^3/h
Noise pressure level	37 dB(A)	41 dB(A)
Max. static pressure	73 Pa	88 Pa
Max. ambient temperature	+70 °C	+70 °C
Power consumption	15 W	14 W

Note

- Please order connecting cable separately

Protective grille

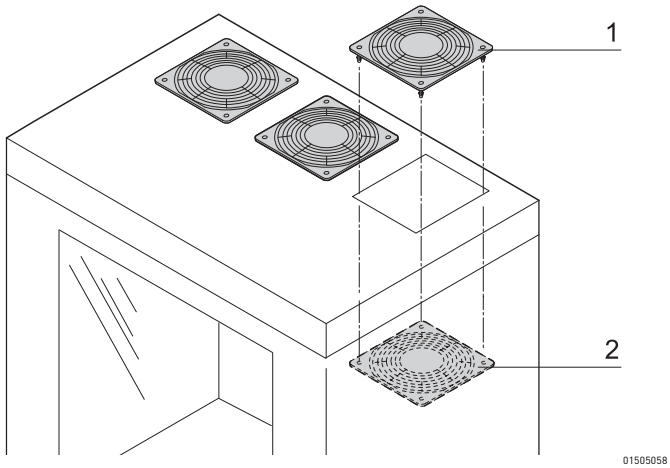

- For passive cooling
- To cover the opening

Delivery comprises

Item	Qty	Description
1	1	Protective grille with pins, plastic, black
2	2	Protective grille with cut-outs, plastic, black

Order Information

Description	Part no.
Protective grille	21236-127

Air filter for 19" wall mounted case

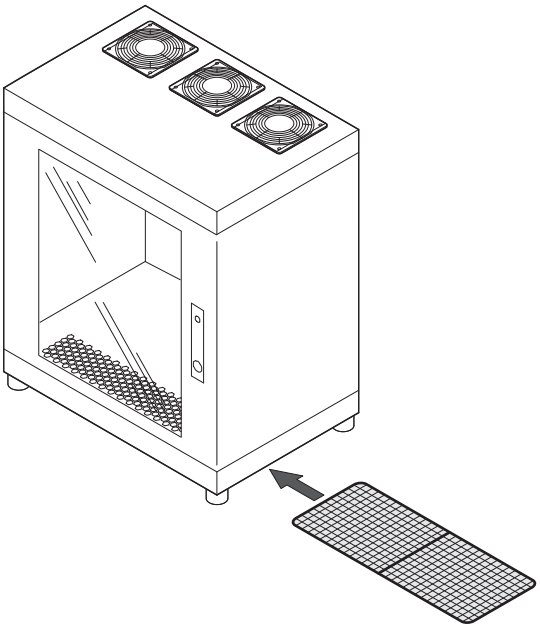

01505059

- Filtering of the inlet air at the case bottom
- Assembly beneath the case, easy filter replacement
- Filter class G3

Delivery comprises

Item	Qty	Description
1	2	Support bracket, St, 1 mm, RAL 7021
2	3	Filter mat with round steel frame, filter class G3
3	1	Assembly kit

Order Information

Description	Part no.
Air filter for case depth 300/400 mm	21236-103
Air filter for case depth 500/600 mm	21236-104
Replacement filter mat for case depth 300/400 mm, PU 3 pieces	21236-125
Replacement filter mat for case depth 500/600 mm, PU 3 pieces	21236-123

Lever handle for single point locking

01005016

- For installation instead of key lock insert
- To open press push-button
- DIN profile half cylinder retrofittable

Delivery comprises

Item	Qty	Description
1	1	Lever handle for single point locking
2	1	Assembly kit

Order Information

Description	Part no.
Lever handle for single point locking	23130-067
DIN profile half cylinder, common locking for lever handle (1 key fits all locks) incl. 2 keys	25127-995

Note

- Other locks such as ASSA, KABA or RONIS available on request

Wall mounted cases – epcase

19" equipment shelf, 1 U

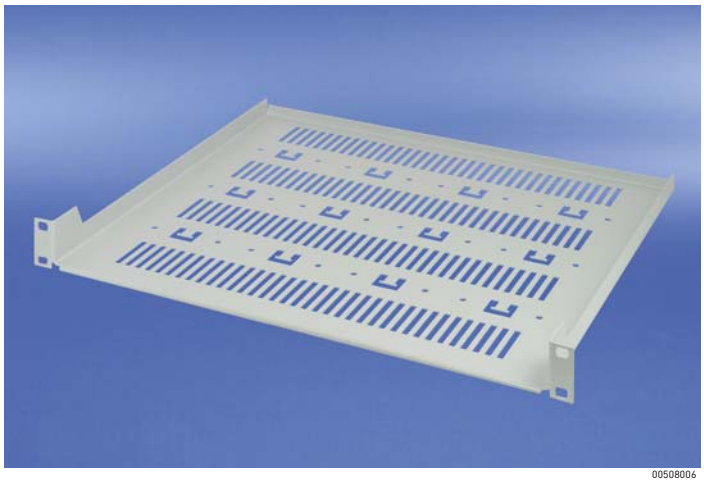

- Static load-carrying capacity 5 kg
- Mounting height 1 U

Delivery comprises

Item	Qty	Description
1	1	Equipment shelf, St, 1.5 mm

Order Information

Width mm	Depth mm	RAL 7035 Part no.
447	390	20118-783
19" assembly kit (screw, washer, nut) (4 x M6 screws x 16, 4 x plastic washers, 4 x cage nuts)		21190-095

19" equipment shelf, 2 U

- Static load-carrying capacity 10 kg
- Mounting height 2 U

Delivery comprises

Item	Qty	Description
1	1	Equipment shelf, St, 1.5 mm

Order Information

Width mm	Depth mm	RAL 7035 Part no.
447	238	20118-785
19" assembly kit (screw, washer, nut) (4 x M6 screws x 16, 4 x plastic washers, 4 x cage nuts)		21190-095

19" equipment shelf, depth-adjustable, 2 U

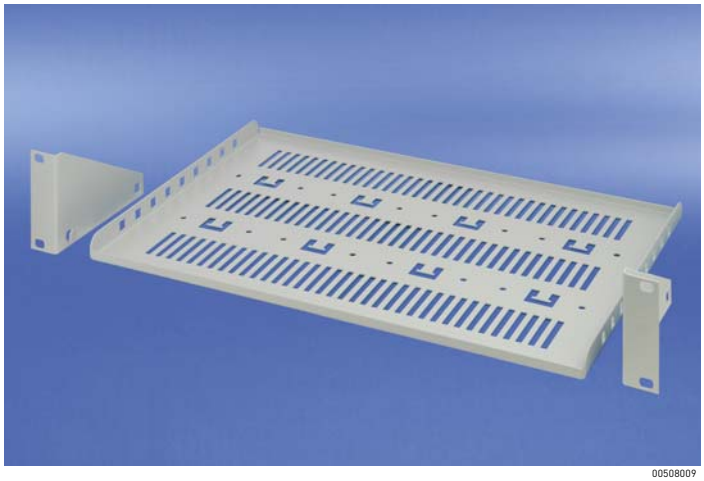

- Static load-carrying capacity 15 kg
- Mounting height 2 U
- Depth-adjustable in 25 mm increments (front protrusion min. 26 mm)

Delivery comprises (kit)

Item	Qty	Description
1	1	Equipment shelf, St, 1.5 mm
2	2	Mounting bracket with assembly kit, St, 1.5 mm

Order Information

Width mm	Depth mm	RAL 7035 Part no.
430	250	
430	300	20118-790
19" assembly kit (screw, washer, nut) (4 x M6 screws x 16, 4 x plastic washers, 4 x cage nuts)		21190-095

Modem shelf

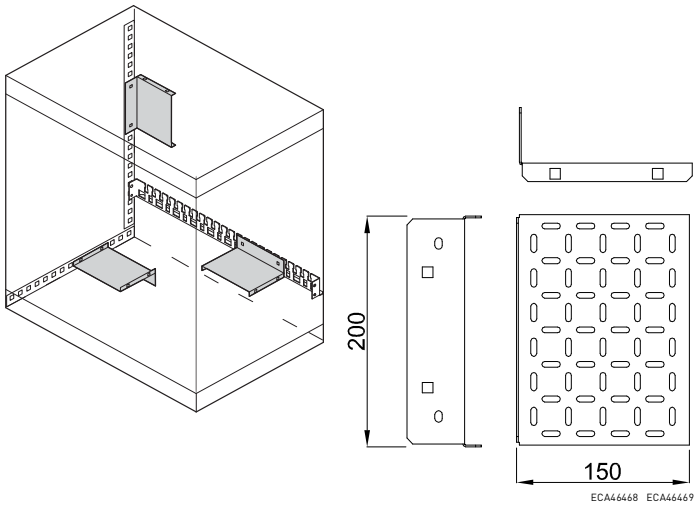

- For fixing modems and other devices
- Assembly onto the cable support rail or direct onto the case
- Static load-carrying capacity 3 kg

Delivery comprises

Item	Qty	Description
1	1	Modem shelf, St, 1.5 mm, RAL 7035
2	1	Assembly kit

Order Information

Width mm	Depth mm	Part no.
200	150	21236-122

Vertical 19" plane

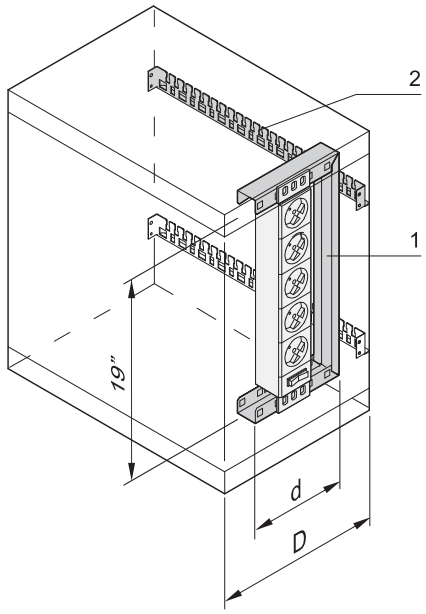

Assembly example with 19" socket strip

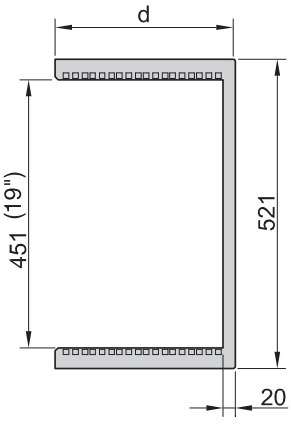

- For lateral, vertical assembly of 19" components
- Useable for case heights from 12 U

Delivery comprises (kit)

Item	Qty	Description
1	1	Vertical 19" plane, St, 2 mm, RAL 7035
2	1	Cable support rail, St, RAL 7035
3	1	Assembly kit

Order Information

Height U	d mm	For case depth D mm	Part no.
3	167	300 ... 600	21236-120
6	300	400 ... 600	21236-121

Wall mounted cases – epcase

Cable eye

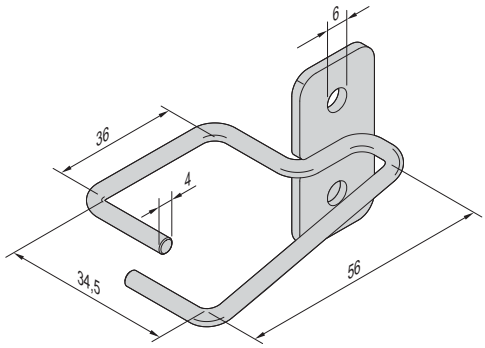

01505051

- For cable fixing/ducting laterally on the panel slide mounts

Delivery comprises

Item	Qty	Description
1	4	Cable eye, St, 4 mm, zinc-plated
2	1	Assembly kit

Order Information

Description	Part no.
Cable eye	21236-102

Cable support rail

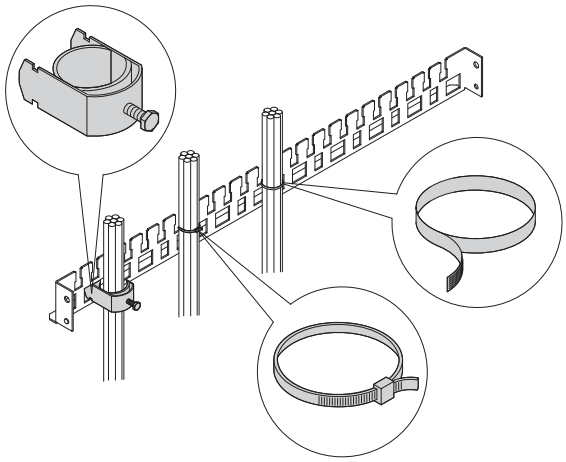

01505052

- For strain relief or cable ducting on rear
- Height-adjustable in 25 mm increments

Delivery comprises

Item	Qty	Description
1	1	Cable support rail, St, 1.5 mm, RAL 7035
2	1	Assembly kit

Order Information

Description	Part no.
Cable support rail	21236-090
Cable shell for cable bundle 30 ... 34 mm, PU 10 pieces	20114-728
Cable tie 92 mm x 2.5 mm, PU 25 pieces	20118-351
Velcro strip Polyethylen/Polyamide, black, length 300 mm, PU 10 pieces	20118-624

Note

- A cable support rail is already supplied with the 19" wall mounted case

Short slide rail

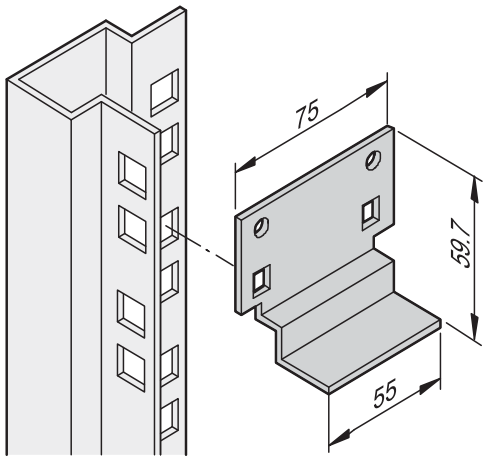

sc96xxxx

- Support for heavy 19" chassis
- To attach on 19" slide mounts
- Static load-carrying capacity max. 15 kg per pair

Delivery comprises

Item	Qty	Description
1	2 / 10	Short slide rail, St, 1.5 mm, finish AlZn
2	1	Assembly kit

Order Information

Description	Qty/PU	Part no.
Short slide rail	2	23130-094
Short slide rail	10	23130-095

10" wall mounted case

- Multi-functional 10" wall case with hinged side panels
- Cable entry possible from above or below;
  the cable entry opening can be sealed with a brush strip
- 10" slide mounts are depth-adjustable in 25 mm increments

Delivery comprises (assembled)

Item	Qty	Description
1	1	Basic case, C-form, St, 2 mm, RAL 7021
2	1	Glazed door with key lock (key no. 2233), frame, St, 1.5 mm, RAL 7035, Sekurit glass, 4 mm
3	2	Side panel, St, 1,5 mm, RAL 7035
4	2	10" panel/slide mounts, St, 1.5 mm, finish AlZn
5	2	Brush strips
6	1	Assembly kit for wall mounting

Order Information

Height U	Height H mm	Width W mm	Depth D mm	Weight kg	Part no.
4	262	345	280	5	10238-151
8	462	345	280	10	10238-152
12	612	345	280	23	10238-153
GND/earthing, PU 1 kit					21236-097
Cable tie 92 mm x 2.5 mm, PU 25 pieces					20118-351
19" assembly kit (screw, washer, nut) (32 x M6 screws x 16, 32 x plastic washers, 32 x cage nuts)					21190-435
Feet, plastic, black, PU 4 pieces					21236-089

Note

- Lever handle and DIN profile half cylinder cannot be retrofitted

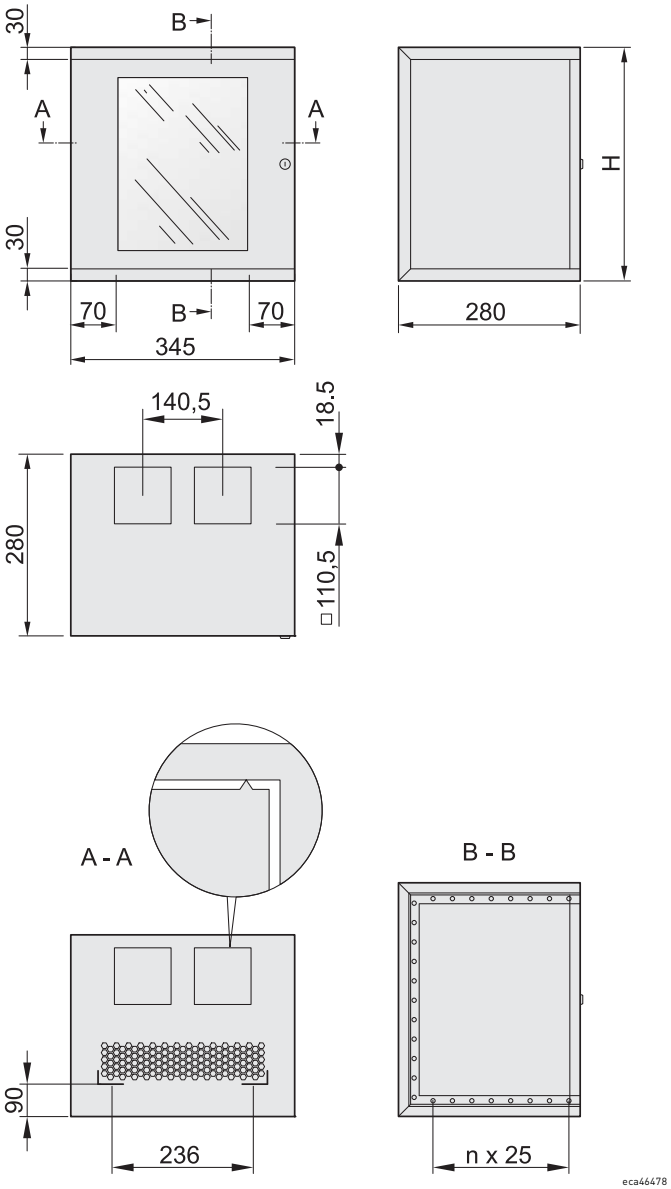

ServicePLUS see page 2.46

Wall mounted cases – epcase

Air filter for 10" wall mounted case

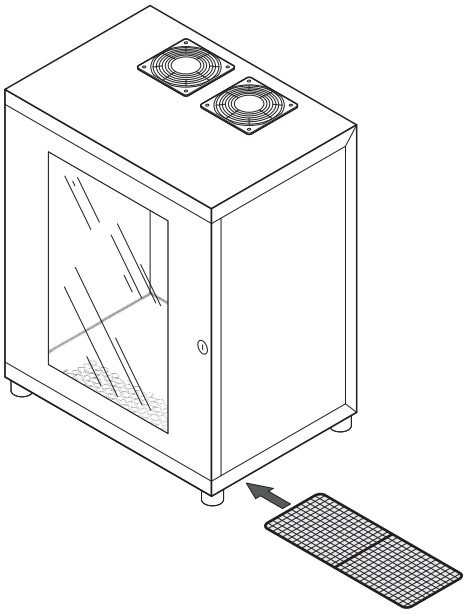

- Filtering of the inlet air at the case bottom
- Assembly beneath the case, easy filter replacement
- Filter class G3

Delivery comprises

Item	Qty	Description
1	2	Support bracket, St, 1 mm, RAL 7021
2	3	Filter mat with round steel frame, filter class G3
3	1	Assembly kit

Order Information

Description	Part no.
Air filter for 10" wall mounted case	21236-095
Replacement filter mat for 10" wall mounted case PU 3 pieces	21236-126

Equipment shelf for 10" wall mounted case

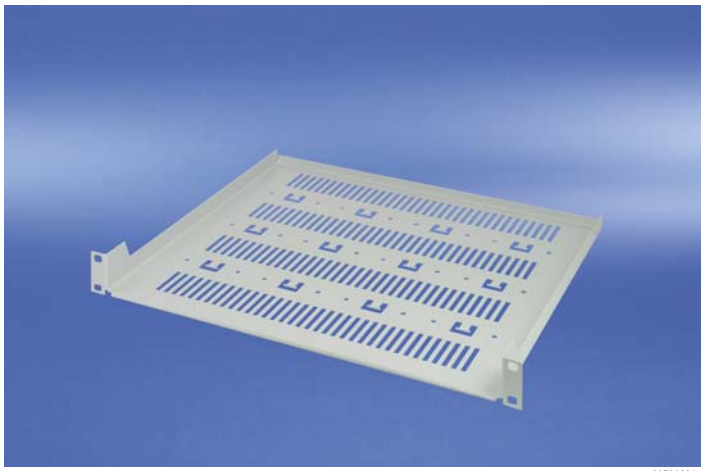

- Static load-carrying capacity 5 kg
- Mounting height 1 U
- Width 10" (254 mm)

Delivery comprises

Item	Qty	Description
1	1	Equipment shelf, St, 1.5 mm, RAL 7035
2	1	Assembly kit

Order Information

Width mm	Depth mm	Part no.
220	150	20118-716

10" distribution field

01504002

- Distribution field with 8 x RJ 45 ports, category 5
- Height 1 U
- Width 10" (254 mm)

Delivery comprises

Item	Qty	Description
1	1	Distribution field, St, 1.5 mm, RAL 7035
2	8	RJ 45 Port

Order Information

Description	Part no.
10" distribution field with 8 x RJ 45 ports	60118-378
Assembly kit PU = 8 × screw, washer, nut	21100-435

10" front panels

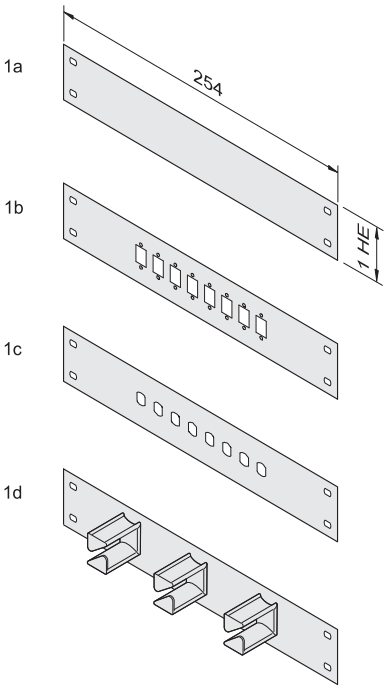

01503053

- Height 1 U
- Width 10" (254 mm)

Delivery comprises

Item	Qty	Description
1	1	Front panel, St, 1.5 mm, RAL 7035

Order Information

Item	Description	Qty/PU	Part no.
1a	10" blank front panel, St, 1.5 mm, RAL 7035	1	20118-717
1b	10" front panel, 8 ports SC, St, 1.5 mm, RAL 7035	1	20118-713
1c	10" front panel, 8 ports ST, St, 1.5 mm, RAL 7035	1	20118-714
1d	10" front panel with 3 plastic cable eyes, St, 1.5 mm, RAL 7035	1	20118-715
Assembly kit PU = 8 × screw, washer, nut			21100-435

Wall mounted cases – epcase

10" socket strip, 1 U

00704001

- Socket strip with four socket inserts
- Bracket for mounting on 10" upright is included

Delivery comprises

Item	Qty	Description
1	1	Socket strip 10", 1 U, 4 socket inserts, 2 m connecting cable with SCHUKO/UTE connector
2	2	Mounting bracket for 10" assembly

Order Information

Description	Part no.
10" socket strip, 4 SCHUKO socket inserts	60110-201
Socket strip 10", 4 UTE socket inserts	60110-220
Assembly kit PU = 8 × screw, washer, nut	21100-435

Content

Cabinets 1
Wall mounted cases 2
Accessories for cabinets and wall mounted cases . 3
Climate control . 4
Electronics cases 5
Subracks/ 19" chassis 6
Front panels, plug-in units ... 7
Systems 8
Power supply units 9
Backplanes ... 10
Connectors, front panel component system 11
Appendix 12

Wall mounted cases – LAN wall mounted

41801004

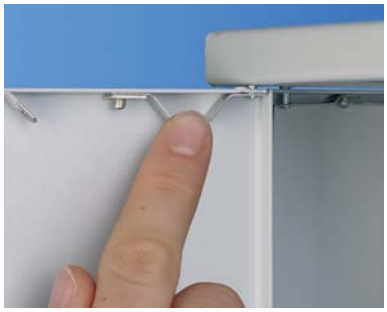

41804001

Door and side panels easily removable

41801005

Vertical 19" plane, therefore low case depth

41801006

Storage of excess cable length

Modularity due to basic case and side-by-side modules

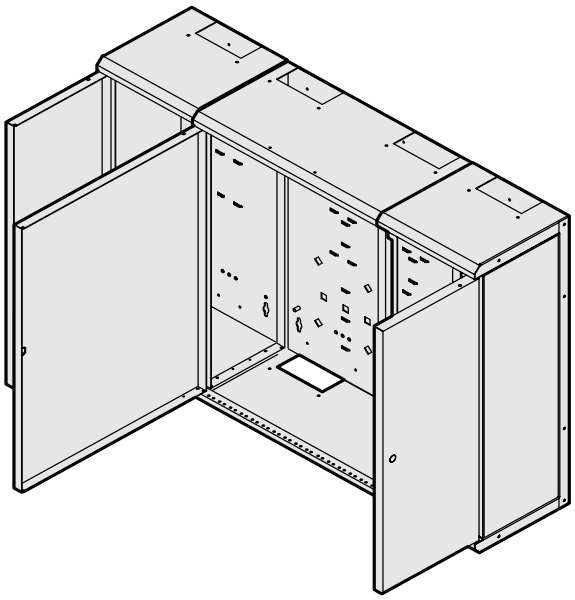

VTLW6672

Wall mounted cases – LAN wall mounted

Overview 2.36

Slim wall mounted cases

- Ideal as fibre optic cable distributor, 4 U wall distributor or as combination of fibre optic cable, copper and telephone distributor
- Optimal ducting of fibre optic cables
- Door and side panels easily removable
- Upgradeable with side-by-side modules

41801006

Fibre optic small case

- Prepared to accomodate up to four splicing cassettes
- Low cabinet depth of 85 mm

41801017

Wall distributor, modular

- Modularity due to basic case and side-by-side modules
- Combination of fibre optic cable, copper or telecommunication applications possible
- Low installation depth of 220 mm due to vertical 19" plane

41802002

Wall distributor, 4 U, vertical

- Low installation depth of 220 mm due to vertical 19" plane
- Corner door with lateral acrylic glass
- Fan retrofittable

30407004

ServicePLUS from page 2.46

e.g. special colours, special sizes
e.g. air conditioning
e.g. fittings, conversions, cut-outs
e.g. custom solutions

www.schroff.biz/ServicePLUS

Small case
Small case 2.38
Cable ducting for fibre cable 2.38
Insertion plate for splicing cassettes 2.39
Splicing cassette 2.39

Modular wall mounted distributor
Basic case 2.40
Side-by-side module 2.41
Basic cable ducting 2.41
Splicing cassette holder 2.42
Splicing cassette 2.42
LSA+ bracket 2.43
Locking insert ... 2.43
19" bracket 2.43

Wall mounted 4 U distributor
Wall mounted 4 U distributor 2.44
Cable ducting for fibre cable 2.45

ServicePLUS ... 2.46

Wall mounted cases – LAN wall mounted

Fibre optic small case

41801003

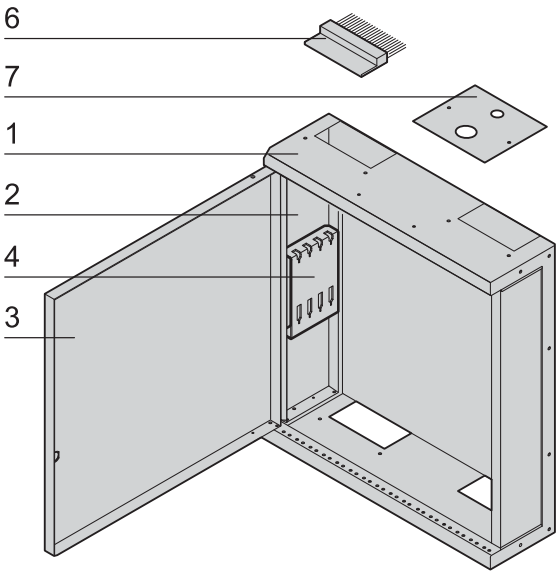

vtlw6684

ServicePLUS see page 2.46

- For distribution of fibre optic main cables or as office distributor
- Space for max. 48 fibres

Delivery comprises (assembled)

Item	Qty	Description
1	1	Case, St, 1.5 mm, RAL 7035, 2 cable ducting openings each top and bottom (without cover)
2	2	Side panel, St, 1 mm, RAL 7035, hinged
3	1	Door, St, 1 mm, RAL 7035, with locking insert 2233-x
4	1	Quadruple splicing cassette holder
5	1	Assembly kit for wall mounting (distance from wall 6.5 mm)

Order Information

Height mm	Width mm	Depth mm	Part no.
300	300	85	60239-006
Item 6 Brush strip for fibre optic small case, self-adhesive, PU 2 pieces			60239-030
Item 7 Cable ducting plate for fibre optic small case, St, 1 mm, zinc-plated, PU 2 pieces			60239-025

Note

- To cover cable through-ducting openings please order either brush strip or cable through-ducting plate separately
- Push-on plate for splicing cassette, see page 2.39
- Splicing cassettes, see page 2.39

Cable ducting for fibre cable

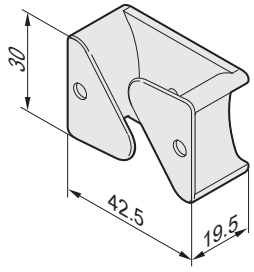

41804051

- For cable ducting with necessary bending radius

Order Information

Description	Part no.
Cable ducting for fibre cable, plastic, black, PU 4 pieces	60239-020

Wall mounted cases – LAN wall mounted

Insertion plate for splicing cassettes

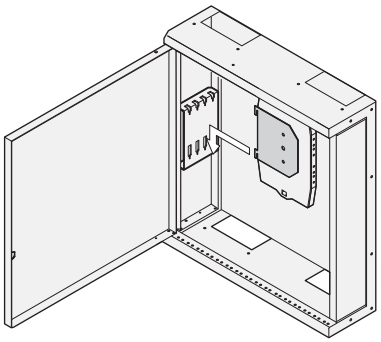

41806050

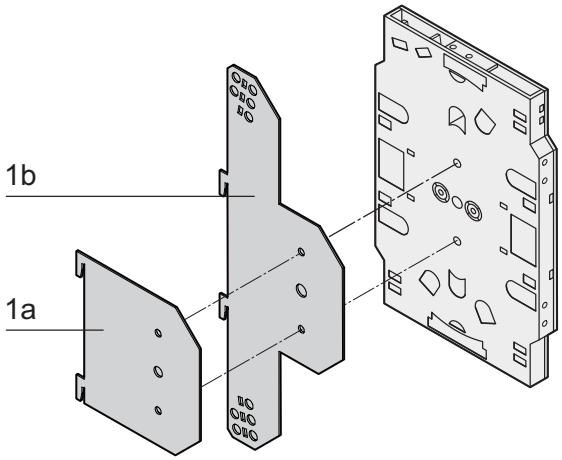

VTLW6678

- The splicing cassette is assembled on the push-on plate and subsequently inserted in the splicing cassette holder

Delivery comprises

Item	Qty	Description
1	4	Push-on plate, St, 1 mm, zinc-plated
2	8	Holding clip for splicing cassette

Order Information

Item	Description	Part no.
Item 1a	Push-on plate without cable ducting	60239-013
Item 1b	Push-on plate with cable ducting for cable ties	60239-014

Splicing cassette

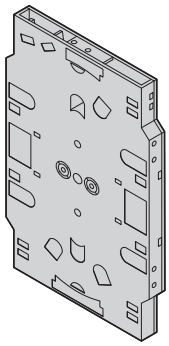

VTLW6679

Splicing cassette

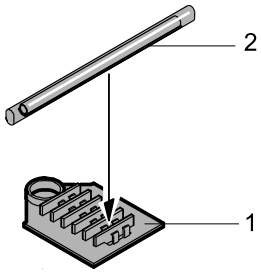

vtlw6680

Splice holder (1), splice protection sleeve (2)

- Accepts a maximum of 12 splices to the telecom standard
- Fibre optic cable splicing cassettes to DIN 47662

Delivery comprises

Item	Qty	Description
1	1	Splicing cassette, plastic, cream white
2	1	Cover, plastic, cream white
3	4	Cable ties

Order Information

Description	Part no.
Splicing cassette	60239-062
Item 1 Splice holder, PU 10 pieces	21101-122
Item 2 Splice protection sleeve, length 60 mm, PU 6 pieces	21101-123

Note

- Please order splice holder and splice protection sleeves separately

Wall mounted cases – LAN wall mounted

Wall distributor, modular

41801002

The modular case system is used as sub or floor level distributor, for fibre optic applications as well as for distribution of copper or telecommunication applications.

The 220 mm deep basic cases can be extended with side-by-side modules and accessories.

Basic case

41801001

- To accomodate splicing cassette holders, LSA+ holder and/or 19" bracket
- Room for max. 288 fibres and excess cable lengths of up to 1 m

Delivery comprises (assembled)

Item	Qty	Description
1	1	Case, St, 1.5 mm, RAL 7035, 2 cable ducting openings each top and bottom (without cover)
2	2	Side panel, St, 1 mm, RAL 7035, hinged
3	1	Door, St, 1 mm, RAL 7035, with locking insert 2233-x
4	1	Assembly kit for wall mounting (distance from wall 6.5 mm)

Order Information

Height mm	Width mm	Depth mm	Part no.
600	425	220	60239-001
GND/earthing kit for wall mounted distributor, sufficient for one basic case and two side-by-side modules			60239-060
Brush strip for wall mounted distributor self-adhesive, PU 2 pieces			60239-031
Cable ducting plate for wall mounted distributor PU 2 pieces			60239-026

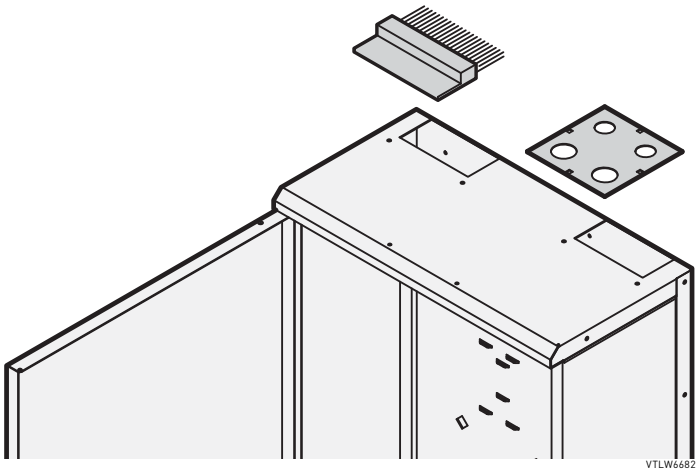

VTLW6682

ServicePLUS see page 2.46

Wall mounted cases – LAN wall mounted

Side-by-side module

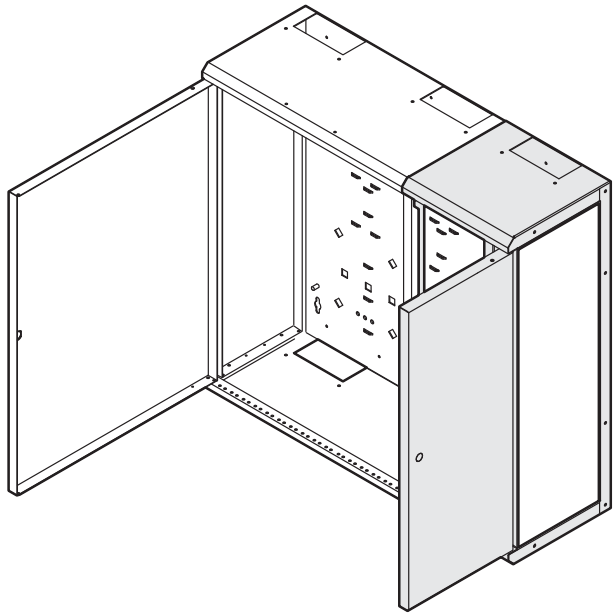

VTLW6673

- For side-by-side mounting to basic case, selectively on the right or left
- To accommodate splicing cassette holders or LSA+ holder

Delivery comprises (assembled)

Item	Qty	Description
1	1	Side-by-side module, St, 1.5 mm, RAL 7035, 2 cable ducting openings top and bottom
2	1	Door, St, 1 mm, RAL 7035, with locking insert
3	1	Door post
4	1	Assembly kit

Order Information

Height mm	Width mm	Depth mm	Part no.
600	225	220	60239-004
Brush strip for wall mounted distributor self-adhesive, PU 2 pieces			60239-031
Cable ducting plate for wall mounted distributor PU 2 pieces			60239-026

ServicePLUS see page 2.46

Basic case cable ducting

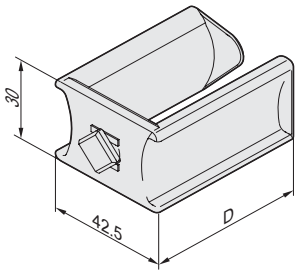

41804050

- For cable ducting with necessary bending radius
- Assembly by inserting into rear panel of case, then given a quarter turn
- Usable in basic case and side-by-side module

Order Information

Description	Part no.
Basic cable ducting, plastic, black, depth D = 55 mm, PU 4 pieces	60239-021

Note

- Cannot be used in fibre optic small case nor in 4 U wall mounted distributor

Wall mounted cases – LAN wall mounted

Splicing cassette holder

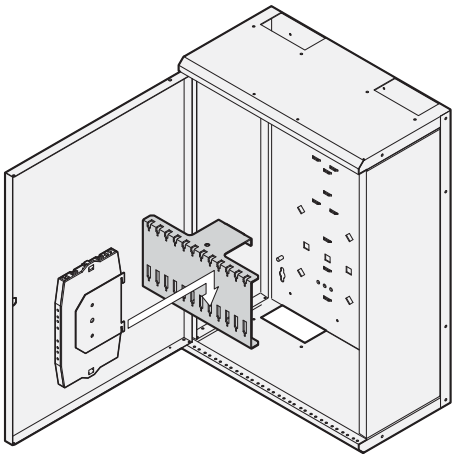

VTLW6677

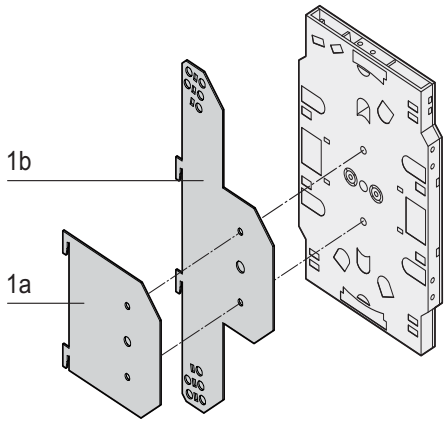

VTLW6678

Push-on plates

- To accommodate 12 splicing cassettes that are also mounted on push-on plates
- Splicing cassette holder is mounted and secured on rear wall of case
- Screw-free fitting

Order Information

Description		Part no.
Splicing cassette holder	12-fold, St, 1 mm, zinc-plated, 1 piece	60239-012
Item 1a Push-on plate without cable ducting PU 4 pieces		60239-013
Item 1b Push-on plate with cable ducting for cable ties PU 4 pieces		60239-014
Cable tie 92 mm x 2.5 mm, PU 25 pieces		20118-351

Note

- Please order push-on plates separately

Splicing cassette

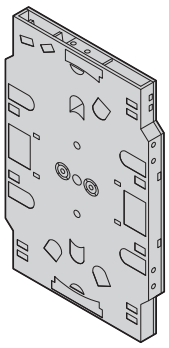

VTLW6679

Splicing cassette

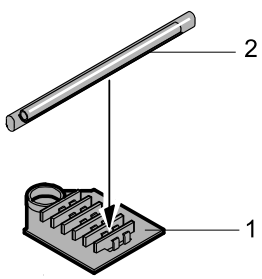

VTLW6679

Splice holder (1), splice protection sleeve (2)

- Accepts a maximum of 12 splices to the telecom standard
- Fibre optic cable splicing cassettes to DIN 47662

Delivery comprises

Item	Qty	Description
1	1	Splicing cassette, plastic, cream white
2	1	Cover, plastic, cream white
3	4	Cable ties

Order Information

Description	Part no.
Splicing cassette	60239-062
Item 1 Splice holder, PU 10 pieces	21101-122
Item 2 Splice protection sleeve, length 60 mm, PU 6 pieces	21101-123

Note

- Please order splice holder and splice protection sleeves separately

Wall mounted cases – LAN wall mounted

Locking insert for basic case and side-by-side module

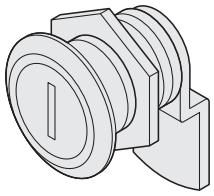

41804054

- For replacement of basic case or side-by-side module inserts

Delivery comprises (assembled)

Item	Qty	Description
1	1	Locking insert
2	2	Key

Order Information

Description	Qty/PU	Part no.
Locking insert 2233-X (included in basic case)	1	60239-051

19" bracket for basic case

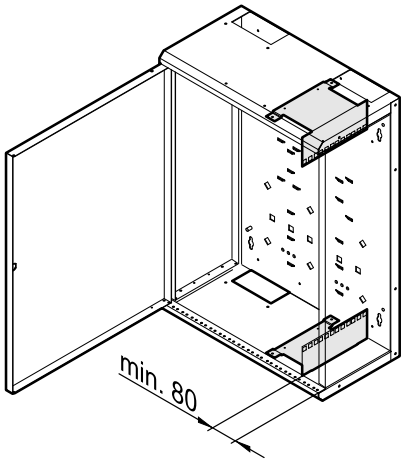

VTLW6685

- For constructing a vertical 19" plane (4 U) in the basic case
- Depth-adjustable in 20 mm increments

Order Information

Description	Part no.
19" bracket for basic case, St, 1.5 mm, RAL 7035, PU 2 pieces	60239-035

Note

- Not suitable in fibre optic small case and side-by-side module

LSA+ bracket

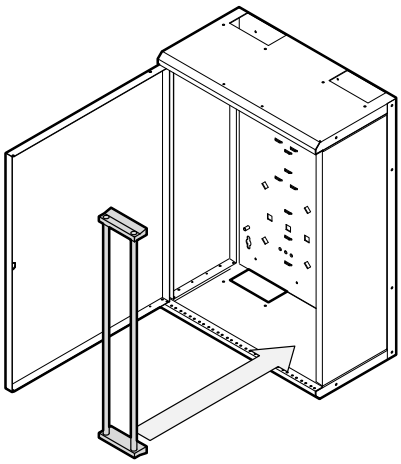

41801501

- For retention of LSA+ type connections
- For assembly in basic case or side-by-side module

Delivery comprises (kit)

Item	Qty	Description
1	2	Rail holder, St, 1.5 mm, zinc-plated
2	2	Rail, stainless steel
3	1	GND/earthing kit
4	1	Assembly kit

Order Information

Description	Part no.
LSA+ bracket	60239-040

Wall mounted cases – LAN wall mounted

Wall mounted distributor, 4 U, vertical

ServicePLUS see page 2.46

- Flat 19" wall mounted case (220 mm deep) for universal cabling systems
- Mounting possibilities for distribution panels (copper and fibre optic) or for active components (e.g. switches), up to a depth of max. 300 mm
- Prepared for fan assembly
- Type of protection IP 20 (when cover plate is closed)

Delivery comprises (assembled)

Item	Qty	Description
1	1	Case, St, 1.5 mm, RAL 7035, 2 cable ducting openings each at top and bottom (without cover)
2	1	Side panel, St, 1 mm, RAL 7035, with ventilation slots (prepared for fan assembly)
3	1	Corner door, St, 1 mm, RAL 7035, 90° offset, with acrylic glass and lateral lock 2233-x
4	3	Cover plate for cable ducting openings, supplied loose (plain or with ventilation slots, depending on mounting position)
5	1	Brush strip, black, supplied loose
6	2	19" bracket, St, 1.5 mm, RAL 7035 (4 U, vertical)
7	1	Assembly kit for wall mounting (distance from wall 6.5 mm)
8	1	Earthing kit

Order Information

Height mm	Width mm	Depth mm	Part no.
600	425	220	60240-006
230 V_{AC} fan with covering grille, 1 piece			20234-822
Thermostat mains connection 230 V_{AC}, 1 piece			20118-719
Brush strip for wall mounted distributor self-adhesive, PU 2 pieces			60239-031

Wall mounted cases – LAN wall mounted

Cable ducting for fibre cable

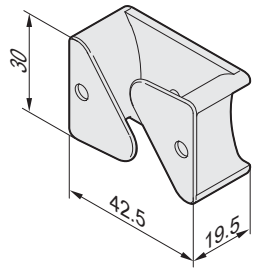

41804051

- For cable ducting with necessary bending radius

Order Information

Description	Description	Part no.
Cable ducting for fibre cable	Plastic, black, PU 4 pieces	60239-020

Wall-mounted cases ServicePLUS

modification

Custom drillings, cut-outs and special colours for off-the-shelf products

Small changes. Large impact.

- Custom drillings, special colours, cut-outs for off-the-shelf products from
  - 10 pieces with epcase
  - 25 pieces with CONCEPTLINE, INLINE, QLINE, A48, wall mounted LAN enclosures
- Further information: www.schroff.co.uk/modification

solution

Integration and custom developments

Simple. Fast. From one source.

- Special sizes, custom solutions, printing from:
  - 10 pieces with epcase
  - 25 pieces with CONCEPTLINE, INLINE, wall mounted LAN enclosures
  - 500 pieces with QLINE, A48
- Integration: components, internal mounting, wiring
- Further information: www.schroff.co.uk/solution

ServicePLUS solution - project examples

40508001

Plastic case A48 or QLINE

- Plain or glazed doors
- Individual printing, cut-outs, with PG screw fitting or with complete assembly

40708001

Steel case INLINE

- Terminal case or installation case with support rails or mounting plates with customised depth bolts
- Cut-outs and drillings marked with specified printing; paint-free contact area for installed components

Wall-mounted cases ServicePLUS

ServicePLUS solution - project examples

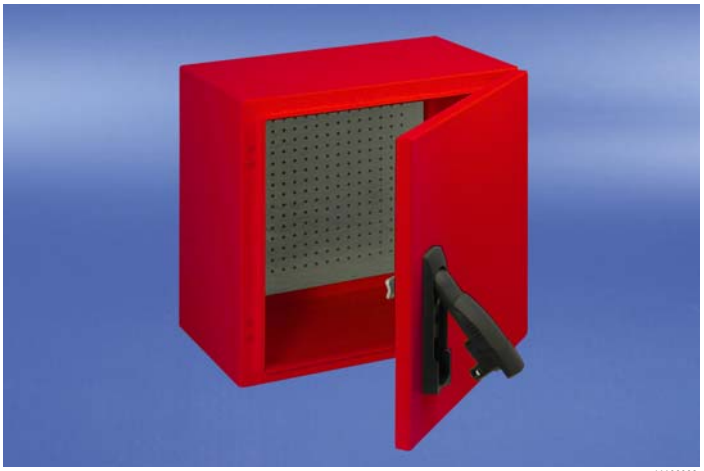

41108003

CONCEPTLINE in special colour (RAL 3027)

- Steel case with a high type of protection: IP 66
- Mounting plate with hole grid to fix assemblies
- Lever handle with optional DIN cylinder

41108002

CONCEPTLINE control module

- Vehicle data processor in CONCEPTLINE case (IP 66)
- Internal mounting on basis of europacPRO subrack with individually machined front panels

41108001

CONCEPTLINE communication module

- CONCEPTLINE case with heat exchanger (IP 55)
- Internal mounting on basis of europacPRO subrack and backplane for the digital GSM-R communication network

PENTAIR

Cabinet Accessories – Overview

Content

Cabinets 1

Wall mounted cases 2

Accessories for cabinets and wall mounted cases . 3

Climate control . 4

Electronics cases 5

Subracks/ 19" chassis 6

Front panels, plug-in units . . . 7

Systems 8

Power supply units 9

Backplanes . . . 10

Connectors, front panel component system 11

Appendix 12

Mechanics

Telescopic slides

Electrics

36108007 (00504002 00509005 00508006 00508008 00505032 00711023 00504006 01495004)

Cabinet Accessories – Overview

Monitors, keyboards

Socket strips

36108008 (00510003 00510006 00709018 00711008 00709001 00708032)

Overview 3.0

Mechanics
19" front panels with cable eyes, cable through-ducting 3.2
19" cable tray 3.9
Cable ductings ... 3.10
19" equipment shelves 3.11
19" drawers 3.13
19" distribution field 3.14
19" mounting tray for LSA+ 3.15
19" module support 3.16
Assembly kit 3.17
Cable supports . 3.21
Cable channels .. 3.21

Telescopic slides 3.22

Electrics
Cabinet lights 3.29
Door contact switches 3.32
19" distributors .. 3.33
Small distribution modules 3.34
Supply modules .. 3.34
GND/earthing rails 3.37
Equipment cables 3.38
Bus bars 3.39

Monitor, keyboard
Monitor, keyboard 3.44
19" drawer with keyboard 3.45

Socket strips with connecting cable
SCHUKO 3.52
UTE 3.55
IEC 3.58
BS 3.61
US 3.62
Switzerland 3.63
19" power distributors, 3-phase 3.65
Socket strips, Wieland® 3.66

Power Control socket strips 3.72
Multimeter 3.74
Telemonitored socket strips 3.75
Power management software 3.79

Front Panel Express

30402151_e

We make your front panel.
You determine how long it takes us.

- **Simple:** You configure your front panels direct online. No registration, no program downloads. The price is displayed immediately.
- **Fast:** You specify your front panel in just a few minutes - and we manufacture it from as little as in 2 days.
- **Flexible:** You determine the quantity and manufacturing time - and thus the cost.
- **Individual:** We make the panels to your specification - mechanical processing, painting and printing.
- **Practical:** We make the job easier for you - if you wish we will also fit the accessories.

19" front panels with holes for handles

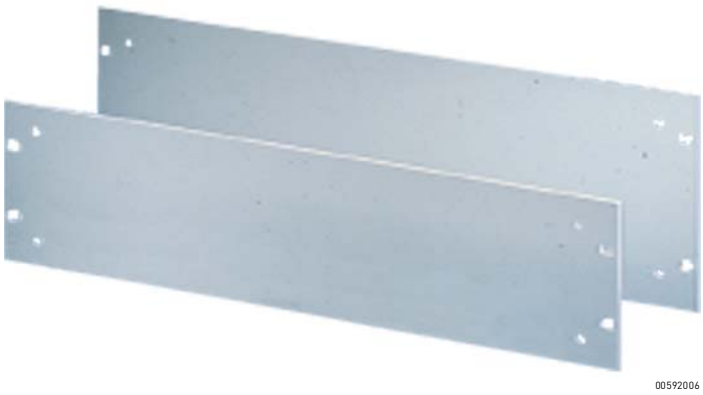

00592006

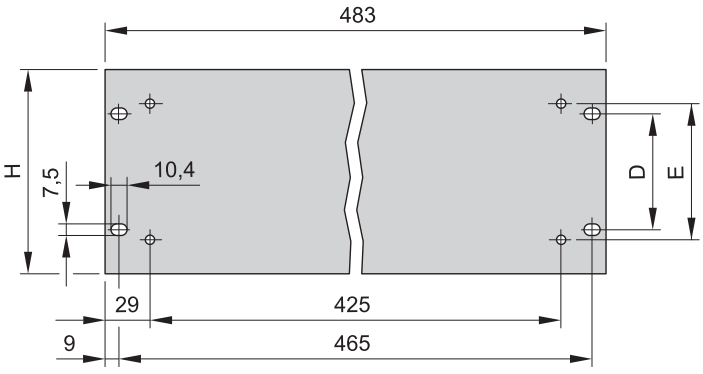

BZA42371

- 19" front panels have additional holes for mounting of handles

Delivery comprises

Item	Qty	Description
1	1	19" front panel, Al

Order Information

Height	H	D	E	Front panel, 4 mm, anodised	Front panel, 3 mm, pre-anodised, cut edges plain
U	mm	mm	mm	Part no.	Part no.
1	43.6	31.7	25	**40304-050**	**30219-161**
2	88.1	76.2	55	**40304-051**	**30219-162**
3	132.5	57.1	88	**40304-052**	**30219-163**
4	177.0	101.6	120	**40304-053**	**30219-164**
5	221.4	146.0	180	**40304-054**	**30219-165**
6	265.9	190.4	180	**40304-055**	**30219-166**

Note

- 19" assembly kit, see page 3.17
- Front panel processing to your instructions under **www.frontpanelexpress.eu**

Cabinet Accessories – Mechanics

Front handle, one-piece, width 12.2 mm

1 U

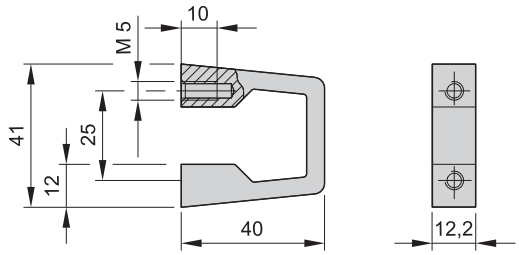

BZA42316

2 U ... 6 U

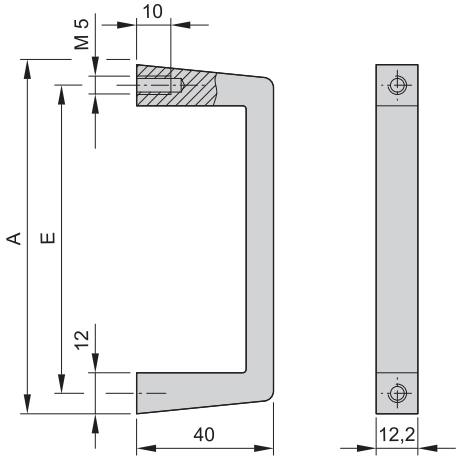

BZA42327

- Static load-carrying capacity 30 kg/pair
- Bolted from rear

Delivery comprises

Item	Qty	Description
1	1	Front handle, Al extrusion, anodised

Order Information

Height	A	E	clear anodised	black anodised
U	mm	mm	Part no.	Part no.
1	41	25	**10501-116**	–
2	69	55	**10501-004**	**10501-025**
3	102	88	**10501-005**	**10501-026**
4	132	120	**10501-006**	**10501-027**
5	194	180	**10501-007**	**10501-028**
6	249	235	**10501-008**	**10501-029**
Accessories				
Panhead screw pozidrive self-locking, M5 × 12, zinc-plated, PU 100 pieces				**21100-788**

Delivery is exclusively in Standard Pack Quantity (SPQ): Minimum order quantity 10 front handles or a multiple thereof

Note

- Please order panhead screws separately

Front handle, multi-part, width 12 mm

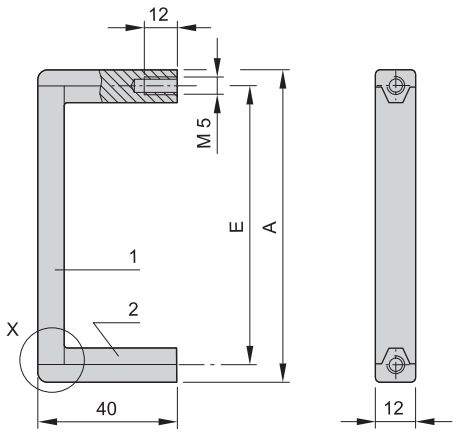

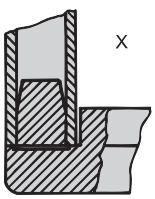

A3-227

- Static load-carrying capacity 10 kg/pair
- In three parts, middle section in Al extrusion, end pieces in glass fibre reinforced plastic
- Bolts on from front

Delivery comprises (kit)

Item	Qty	Description
1	1	Front handle, AL extrusion, anodised
2	2	End piece, PA, black

Order Information

Height	A	E	Part no.
U	mm	mm	
3	102	88	**10502-057**
4	134	120	**10502-059**
5	194	180	**10502-063**
6	249	235	**10502-065**
Accessories			
Panhead screw pozidrive self-locking, M5 × 12, zinc-plated, PU 100 pieces			**21100-788**

Delivery is exclusively in Standard Pack Quantity (SPQ): Minimum order quantity 10 front handles or a multiple thereof

Note

- Please order panhead screws separately

19" front panels

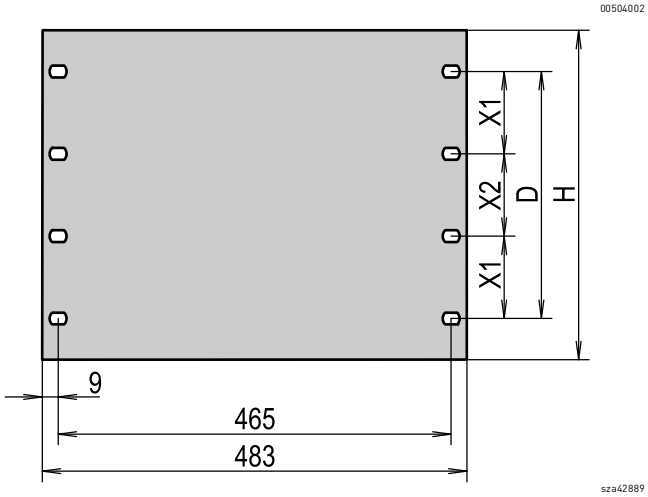

- Al anodised, colours light grey (RAL 7035) or black grey (RAL 7021)

Delivery comprises

Item	Qty	Description
1	1	19" front panel, Al, 3 mm/4 mm

Order Information

Height	H	D	X1	X2	Mounting holes	3 mm thick, RAL 7021	3 mm thick, RAL 7035	3 mm, Al anodised, cut edges plain	4 mm, Al anodised
U	mm	mm	mm	mm	pieces	Part no.	Part no.	Part no.	Part no.
1	43.6	31.7	–	–	4	30118-948	30118-299	30219-098	40304-074
2	88.1	76.2	–	–	4	30118-949	30118-301	30219-101	40304-075
3	132.5	57.1	–	–	4	30118-950	30118-302	30219-104	40304-076
4	177.0	101.6	–	–	4	30118-951	30118-303	30219-107	40304-077
5	221.4	146.0	–	–	4	30118-952	30118-304	30219-110	40304-078
6	265.9	190.4	–	–	4	30118-953	30118-305	30219-113	40304-079
7	310.3	234.9	88.9	57.1	8	30118-954	30118-306	30219-137	40304-080
8	354.8	279.4	101.6	76.2	8	30118-955	30118-307	30219-138	40304-081
9	399.2	323.8	101.6	120.6	8	30118-956	30118-308	30219-143	40304-082
10	443.7	368.3	101.6	165.1	8	30118-957	30118-309	30219-144	40304-083
Delivery: supplied loose with cabinet or frame									Part no./35

Note

- 19" assembly kit see page 3.17
- Front panel processing to your instructions under www.frontpanelexpress.eu

Cabinet Accessories – Mechanics

Clip-on 19" plastic front panels

00507003

00507004

- Simple fitting by clipping onto the 19" plane
- Attractive design
- Two colors: light gray or black
- 6 U front panels can be snapped off in 1, 2 or 3 U increments without tools

Delivery includes

Item	Qty	Description
1	10	Clip-on 19" plastic front panels, ABS, antistatic, UL 94 V-0

Order Information

Height U	Height mm	Description	Part No.
1	43.6	black	**D19BPT1RU**
1	43.6	light grey	**87927991**
2	88.1	black	**D19BPT2RU**
2	88.1	light grey	**87927992**
6	270.0	black	23130-560
6	270.0	light grey	23130-561
Delivery: supplied loose with cabinet or frame			**Part no./35**

Cabinet Accessories – Mechanics

19" vented front panel

00504005

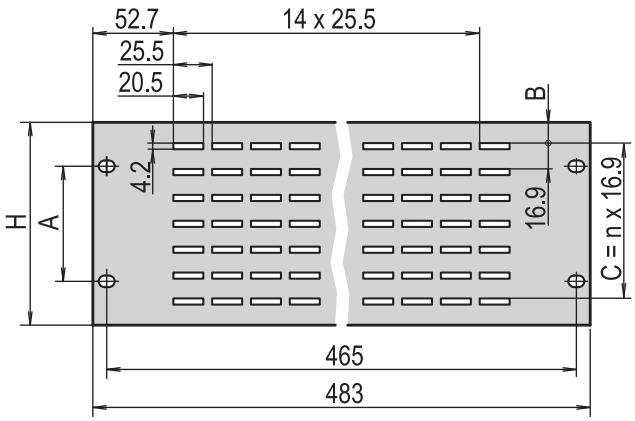

00502509

- Al anodised, Al untreated, light grey (RAL 7035) or black grey (RAL 7021)

Delivery comprises

Item	Qty	Description
1	1	19" vented front panel, Al, 2.5 mm

Note

- 19" assembly kit see page 3.17

Order Information

Height U	H mm	A mm	B mm	C mm	RAL 7021 Part no.	RAL 7035 Part no.	Al anodised Part no.	Al untreated Part no.
1	43.6	31.7	11.2	16.9	**30118-962**	**30702-056**	**30702-047**	**30702-044**
2	88.1	76.2	16.6	50.7	**30118-963**	**30702-057**	**30702-048**	**30702-045**
3	132.5	57.1	13.5	101.4	**30118-964**	**30702-058**	**30702-049**	**30702-046**
Delivery: supplied loose with cabinet or frame								**Part no./35**

19" vented front grille, 2 U

02892009

Delivery comprises (kit)

Item	Qty	Description
1	1	Front grille, plastic, black
2	1	Filter
3	1	Retention bracket, St, 1 mm, hot-dip aluminized

Order Information

Description	Part no.
19" vented front grille, 2 U	**60715-049**
Accessories	
Replacement filter for 19" vented front grille 2 U, PU 3 pieces	**60715-050**
Delivery: supplied loose with cabinet or frame	**Part no./35**

Note

- 19" assembly kit see page 3.17

Cabinet Accessories – Mechanics

19" front panel for cable eyes

00509001

- 19" front panel to accommodate cable eyes (to mount the eyes, insert and rotate them 45°)

Delivery comprises

Item	Qty	Description
1	1	19" front panel, 1 U, St, 1.5 mm

Order Information

Height H U	Height H mm	RAL 7021 Part no.	RAL 7035 Part no.
1	43.6	**20118-762**	**20118-761**
Delivery: supplied loose with cabinet or frame			**Part no./35**

Note

- Please order cable eyes separately
- 19" assembly kit, see page 3.17

Plastic cable eye

00506020

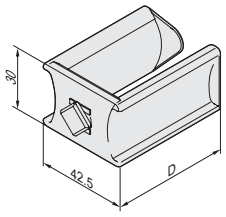

41804050

Plastic cable eyes mounted on 19" front panel

- Simple to fit cable eyes: insert and rotate them 45°

Order Information

Plastic cable eye	Part no.
Depth D = 55 mm, with clip, PU 5 pieces	**60118-458**
Depth D = 100 mm, with clip, PU 5 pieces	**60118-459**
Delivery: supplied loose with cabinet or frame	**Part no./35**

Steel cable eye

00506019

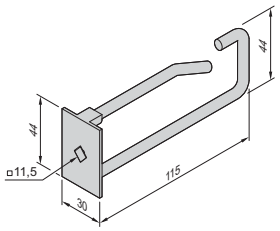

00506050

Steel cable eyes mounted on 19" front panel

- Simple to fit cable eyes: insert and rotate them 45°

Order Information

Steel cable eye	Part no.
Round steel 5 mm, width 44 mm, depth 115 mm, PU 5 pieces	**60118-457**
Delivery: supplied loose with cabinet or frame	**Part no./35**

Double steel cable eye

00509005

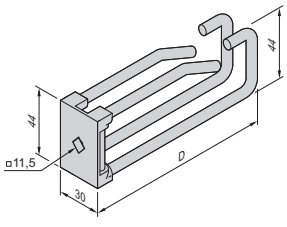

00509050

Rubber pad mounted on double steel cable eyes

- Simple to fit cable eyes: insert and rotate them 45°

Order Information

Double steel cable eye	Part no.
Round steel 5 mm, width 44 mm, depth D = 80 mm, PU 5 pieces	**60118-473**
Round steel 5 mm, width 44 mm, depth D = 115 mm, PU 5 pieces	**60118-474**
Accessories	
Rubber pad for double steel cable eye for depth D = 80 mm, PU 5 pieces	**60118-475**
Rubber pad for double steel cable eye for depth D = 115 mm, PU 5 pieces	**60118-476**
Delivery: supplied loose with cabinet or frame	**Part no./35**

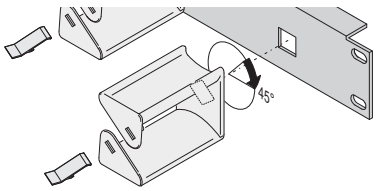

41806051

To fix cable eye to front panel: insert and rotate it 45° (example with plastic cable eye)

19" front panel with cable ducting and cable through ducting

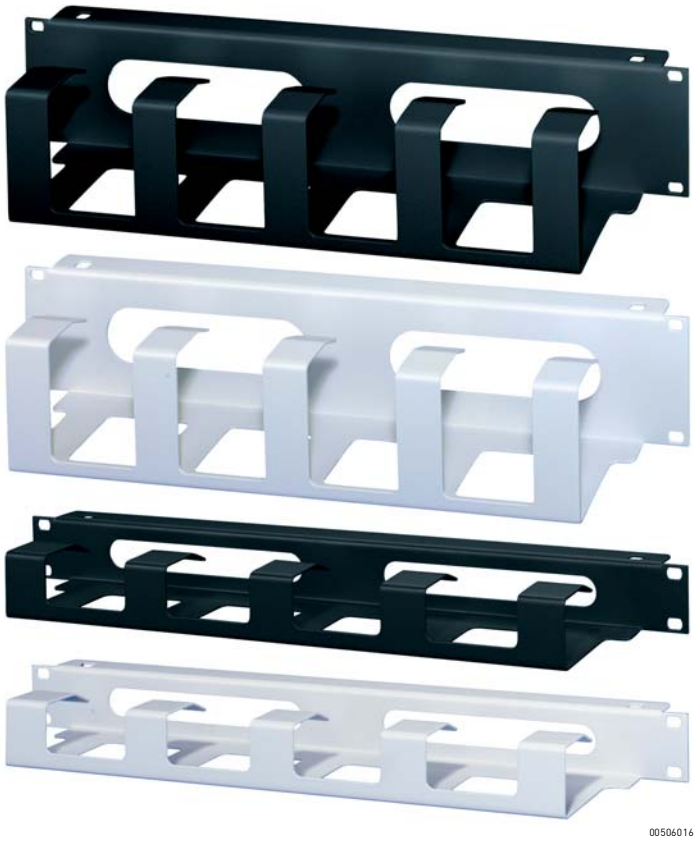

Delivery comprises

Item	Qty	Description
1	2	19" front panel with integrated cable ducting, St, 1.5 mm, 78 mm deep

Order Information

Height U	Height mm	Description	RAL 7035 Part no.	RAL 7021 Part no.
1	43.6	2 oval cable ducting openings, 150 x 32 mm	**20118-757**	**20118-758**
2	88.1	2 oval cable ducting openings, 150 x 76 mm	**20118-759**	**20118-760**
Delivery: supplied loose with cabinet or frame				**Part no./35**

Note

- 19" assembly kit, see page 3.17

19" cable through ducting

- Mounting height 1 U or 2 U

Delivery comprises

Item	Qty	Description
1	2	19" cable ducting, St, 1.5 mm

Order Information

Height U	Height mm	Description	RAL 7021 Part no.	RAL 7035 Part no.
1	43.6	Cable ducting opening 27.5 x 438 mm	**20118-767**	**20118-734**
2	88.1	Cable ducting opening 72.0 x 438 mm	**20118-768**	**20118-736**
Delivery: supplied loose with cabinet or frame				**Part no./35**

Note

- 19" assembly kit see page 3.17

Cabinet Accessories – Mechanics

19" cable ducting with brush strip

01604007

- Mounting height 1 U
- No threading necessary

Delivery comprises

Item	Qty	Description
1	2	Al extrusion with brush strip (plastic, black), crimped

Order Information

Description	Part no.
19" cable ducting with brush strip	**60118-437**
Delivery: supplied loose with cabinet or frame	**Part no./35**

Note

- 19" assembly kit see page 3.17

19" cable tray, 2 U

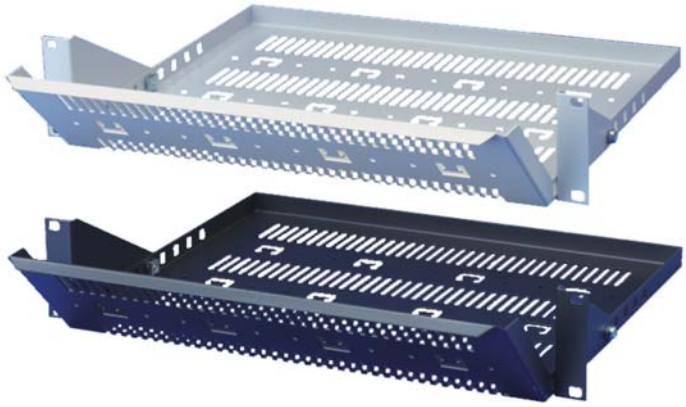

00507001

- Load-carrying capacity 15 kg
- Installation height 2 U
- Depth adjustable in 25 mm grid increments, forward protrusion min. 91 mm, max. 191 mm

Delivery comprises (Kit)

Item	Qty	Description
1	1	19" cable tray, 2 U, St, 1.5 mm
2	2	Mounting bracket, St, 1.5 mm

Order Information

Width mm	Depth mm	RAL 7021 Part no.	RAL 7035 Part no.
430	450	**20118-795**	**20118-794**
Delivery: supplied loose with cabinet or frame			**Part no./35**

Note

- 19" assembly kit see page 3.17

Cable manager, horizontal

40011010

Front

40011006

Front and rear

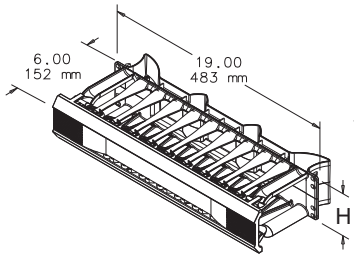

89073653

Front

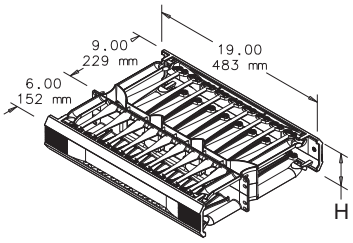

89073654

Front and rear

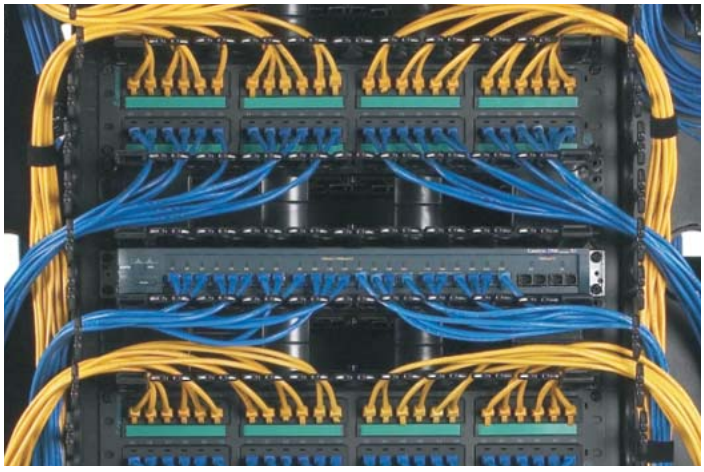

40011009

Application

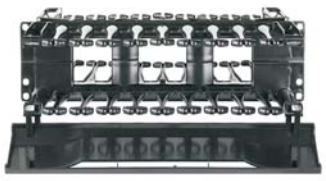

40011007

Cable manager with hinged cover

40011008

Top view, cable manager with cable fingers front and rear

- Excellent horizontal cable ducting for large cable volumes
- The cables are held with robust, rounded cable fingers
- Quick access to cables (cover hinges upwards, downwards or comes off completely)
- Simple to fit: clip in then screw down
- 1 and 2 U versions
- Versions for front and rear cable routing
- Optimal cabling from horizontal to vertical

Delivery comprises

Item	Qty	Description
1	1	Cable manager, plastic, black
2	1	Fitting material with user manual

Order Information

Description	Height H		Width	Depth	Part no.
	U	mm	mm	mm	
Front	1	44,5	483.00	152 mm	**DCHS1**
Front	2	88,9	483.00	152 mm	**DCHS2**
Front and rear	2	88,9	483.00	229 mm + 152 mm	**DCHD2**

Note

- 19" assembly kit see page 3.17

Cabinet Accessories – Mechanics

19" equipment shelf, 1 U

00508007

- Static load-carrying capacity 5 kg
- Mounting height 1 U

Delivery comprises

Item	Qty	Description
1	1	Equipment shelf, St, 1.5 mm

Order Information

Width mm	Depth mm	AlZn Part no.	RAL 7021 Part no.	RAL 7035 Part no.
447	390	**20118-781**	**20118-782**	**20118-783**
Delivery: supplied loose with cabinet or frame				**Part no./35**

- 19" assembly kit, see page 3.17

19" equipment shelf, 2 U

00508003

- Static load-carrying capacity 10 kg
- Mounting height 2 U

Delivery comprises

Item	Qty	Description
1	1	Equipment shelf, St, 1.5 mm

Order Information

Width mm	Depth mm	RAL 7021 Part no.	RAL 7035 Part no.
447	238	**20118-784**	**20118-785**
Delivery: supplied loose with cabinet or frame			**Part no./35**

- 19" assembly kit, see page 3.17

19" equipment shelf, depth-adjustable, 2 U

00508010

- Static load-carrying capacity 15 kg
- Installation height 2 U
- Depth adjustable in 25 mm grid increments, forward protrusion min. 26 mm

Delivery comprises (kit)

Item	Qty	Description
1	1	Equipment shelf, St, 1.5 mm
2	2	Mounting bracket with assembly kit, St, 1.5 mm

Order Information

Width mm	Depth mm	RAL 7021 Part no.	RAL 7035 Part no.
430	250	**20118-786**	
430	300	**20118-787**	**20118-790**
430	400	**20118-788**	**20118-791**
Delivery: supplied loose with cabinet or frame			**Part no./35**

- 19" assembly kit, see page 3.17

19" shelf, stationary, depth-adjustable, 1 U

40011016

Shelf with variable mounting dimensions

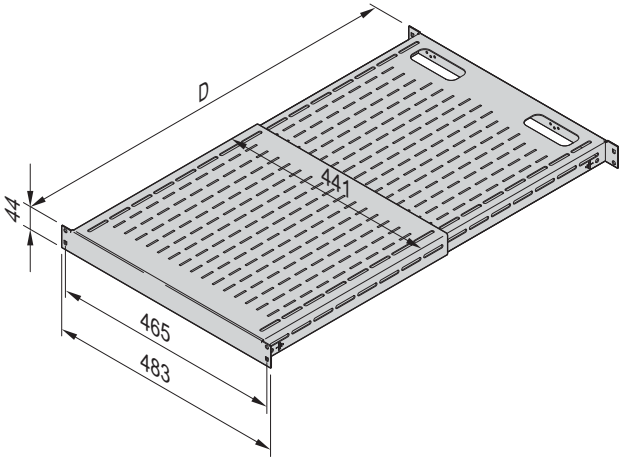

89073664

- Static load-carrying capacity 68 kg
- Mounting height 1 U
- For mounting on four 19" posts or four 19" panel/slide mounts
- Variable mounting dimensions (depth-adjustable from 19" angle to 19" angle)
- 2 versions
  - Mounting dimensions 495 ... 851 mm
  - Mounting dimensions 792 ... 1151 mm
- 2 oval cut-outs for cable ducting
- Colour black, RAL 9005

Delivery comprises

Item	Qty	Description
1	1	Shelf, depth-adjustable, width 19", RAL 9005 (black); shelf is suspended on 19" upright or 19" panel/slide mount
2	1	Fitting material with user manual

Order Information

19" shelf, stationary, depth-adjustable, 1 U	Part no.
Mounting dimensions D 495 ... 851 mm	D19FVT69B
Mounting dimensions D 792 ... 1151 mm	D19FVT912B

Note

- 19" assembly kit see page 3.17

Cabinet Accessories – Mechanics

19" drawer

00506009

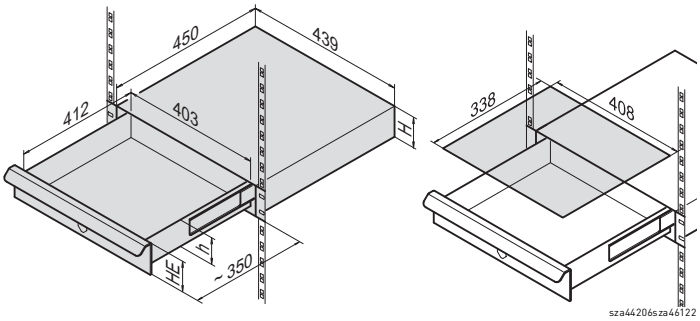

sza44206sza46122

19" drawer

Writing surface

- Height 1, 2 or 3 U
- Static load-carrying capacity 15 kg
- Optional writing surface

Delivery comprises ((assembled))

Item	Qty	Description
1	1	19" drawer with lock (2 keys)
1	2	Assembly kit

Order Information

Height H		Height h	Front panel anodised	Front panel RAL 7021	Front panel RAL 7035
U	mm	mm	Part no.	Part no.	Part no.
1	41.6	30	**20110-061**	**20110-180**	**20110-054**
2	86.0	73	**20110-062**	**20110-181**	**20110-055**
3	130.5	117	**20110-063**	**20110-182**	**20110-056**
Accessories					
Writing surface for 19" drawer St, 1 mm, RAL 7035, 1 piece					**20110-060**
Delivery: supplied loose with cabinet or frame					**Part no./35**

19" keyboard drawer, 2 U

005002

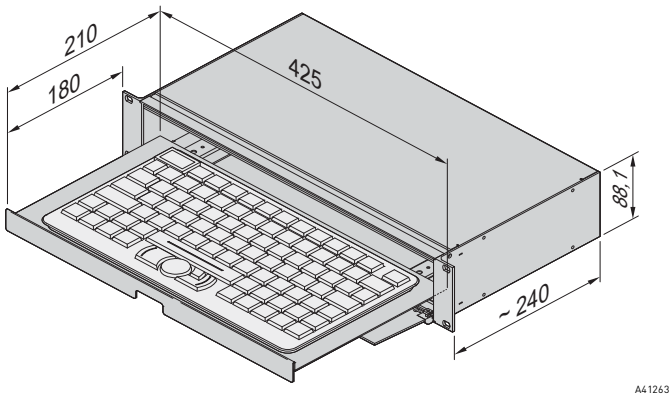

A41263

- For keyboards up to 425 mm width, 210 mm depth, 45 mm height
- IP 40 when closed

Delivery comprises

Item	Qty	Description
1	1	Keyboard drawer with hinged front panel, Al, anodised (incl. locking)
2	2	Telescopic slide, St, zinc-plated
3	1	Keyboard chassis, St, 2.5 mm, RAL 7030
4	2	Front horizontal rail, Al extrusion, anodised

Order Information

Description	Part no.
19" keyboard drawer, 2 U	**10822-009**
Accessories	
Lock for 19" keyboard drawer 1 × lock incl. 2 keys	**60126-118**
Delivery: supplied loose with cabinet or frame	**Part no./35**

Note

- Without keyboard
- 19" assembly kit, see page 3.17

19'' distribution field, Cat 6

01604002

Distribution field Cat 6

- 1 U distribution field with 24 x RJ45 ports
- For use in communications networks, in accordance with ISO/IEC 11801 (as at 03/95)
- Meets the specifications for EN 50 173 (as at 07/95)
- Easy to fit thanks to dual insulation displacement technique (LSA+/110)
- Case can be opened and closed without tools, with quick-release fastener

Delivery comprises (assembled)

Item	Qty	Description
1	1	19" case, shielded, St, RAL 7035, 1 U, with earthing stud
2	3	Backplanes with 8 x dual insulation displacement technique for AWG 22--24 cables and 8 x RJ45 sockets
3	24	Cable ties

Order Information

Description	Part no.
19'' distribution field, Cat 6	60118-435
Delivery: supplied loose with cabinet or frame	**Part no./35**

Note

- 19" assembly kit see page 3.17

Document pocket

00506004 00506005

Steel, DIN A4 Plastic, DIN A4

00506006

Plastic, DIN A3

- For storage of documents and circuit diagrams
- Assembly with double sided adhesive tape

Delivery comprises

Item	Qty	Description
1	1	Document pocket
2	1	Adhesive tape

Order Information

Description	Dimensions H × W × D mm	Part no.
Steel, DIN A4, RAL 7035	180 × 336 × 34	21126-271
Plastic, DIN A4, grey	195 × 356 × 21	60100-302
Plastic, DIN A3, grey	305 × 305 × 25	ADP2
Delivery: supplied loose with cabinet or frame		**Part no./35**

Cabinet Accessories – Mechanics

19" mounting tray for LSA+

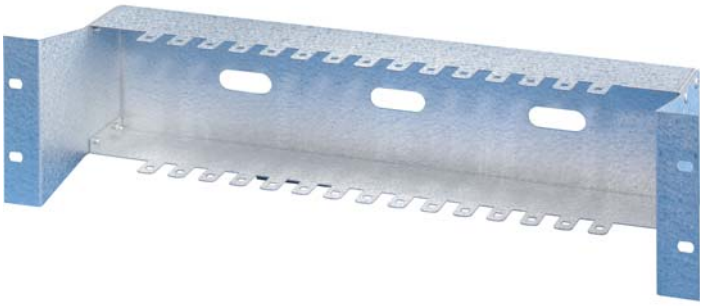

00506008

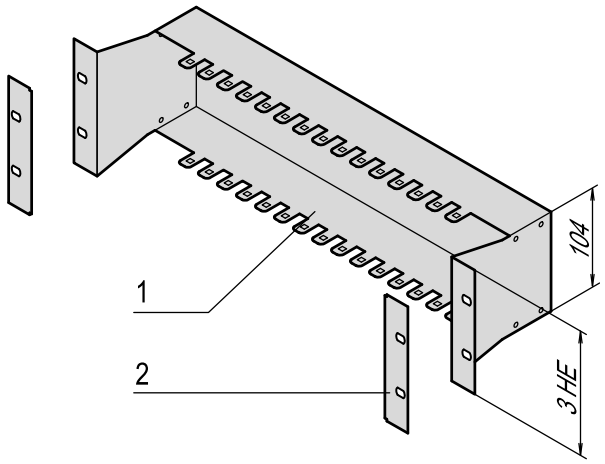

VTA45668

- Mounting height 3 U
- For retention of up to 15 LSA+ guide rails

Delivery comprises (kit)

Item	Qty	Description
1	1	19" mounting tray, St, 1.5 mm, finish AlZn
2	2	Flange cover, Al, anodised

Order Information

Description	Part no.
19" mounting tray for LSA+	**21493-079**
Delivery: supplied loose with cabinet or frame	**Part no./35**

Note

- 19" assembly kit see page 3.17

19" mounting bracket

00506007

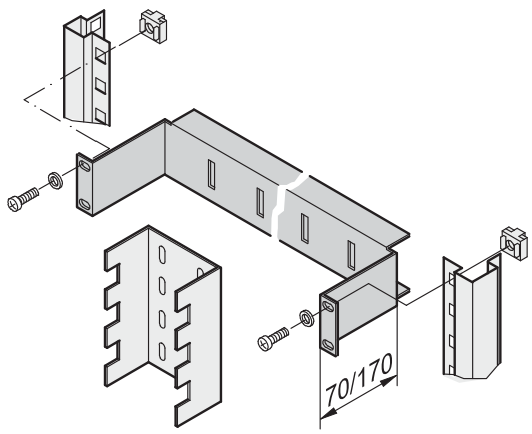

SC30

- Mounting height 1 U
- For fixing cable channels and system rails (e.g. LSA+ or Infra+)
- Mounting plane set back by optionally 70 or 170 mm relative to the 19" plane

Delivery comprises

Item	Qty	Description
1	1	19" mounting bracket, St, 1.5 mm, RAL 7035

Order Information

Description	Depth mm	Part no.
19" mounting bracket	70	**30118-802**
19" mounting bracket	170	**30118-803**
Delivery: supplied loose with cabinet or frame		**Part no./35**

Note

- 19" assembly kit see page 3.17

19" module support, 3 U

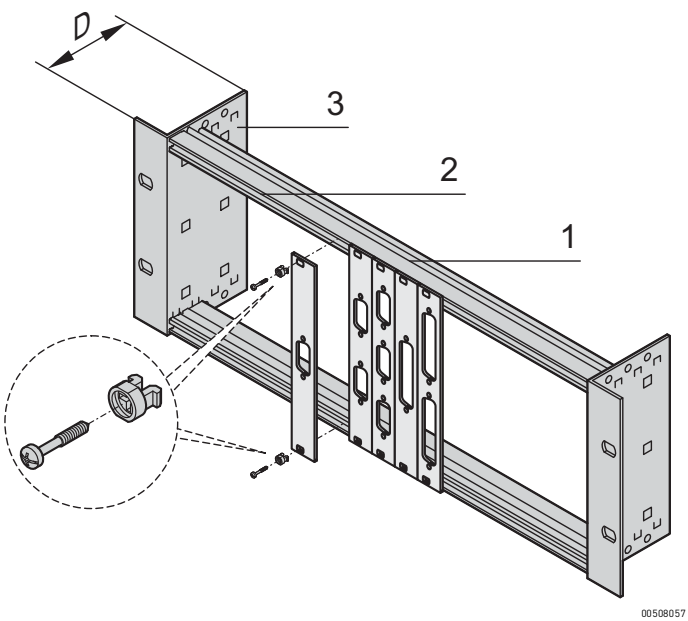

00508057

- For assembly of partial width front panels with SUB-D-, ST type 3 or FDDI cut-outs
- Available in two versions
  - without strain relief rail
  - with strain relief rail
- Optional front panels, Al, 2.5 mm, RAL 7035

Delivery comprises (kit)

Item	Qty	Description
1	1	19" module support, 3 U, Al
2	2	Threaded inserts with thread M2.5
3	2	Gland plate, St, 1 mm, RAL 7035
4	1	Strain relief rail, St, 1.5 mm, RAL 7035 (only for version with strain relief)
5	1	Assembly kit

Order Information

Description	Height U	Depth D mm	Part no.
19" module support without strain relief	3	40	**20118-630**
19" module support with strain relief	3	115	**20118-631**
Accessories			
Front panel 3 U, 4 HP, 1 piece			**30118-328**
Front panel 3 U, 7 HP, 1 piece			**30118-329**
Front panel 3 U, 14 HP, 1 piece			**30118-330**
Front panel 3 U, 28 HP, 1 piece			**30118-331**
Front panel Sub-D 9-pin 3 U, 4 HP, cut-out 1 x 9-pin, 1 piece			**30118-338**
Front panel Sub-D 9-pin 3 U, 4 HP, cut-out 2 x 9-pin, 1 piece			**30118-336**
Front panel Sub-D 9-pin 3 U, 4 HP, cut-out 3 x 9-pin, 1 piece			**30118-332**
Front panel Sub-D 25-pin 3 U, 4 HP, cut-out 1 x 25-pin, 1 piece			**30118-334**
Front panel Sub-D 25-pin 3 U, 4 HP, cut-out 2 x 25-pin, 1 piece			**30118-335**
Quick release fastener for front panel assembly, PU 100 pieces			**21100-586**
Delivery: supplied loose with cabinet or frame			**Part no./35**

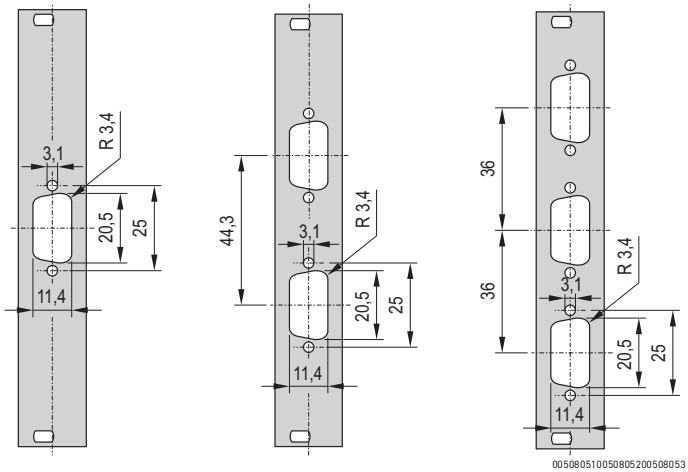

0050805100508052005080 53

Front panel Sub-D 9-pin

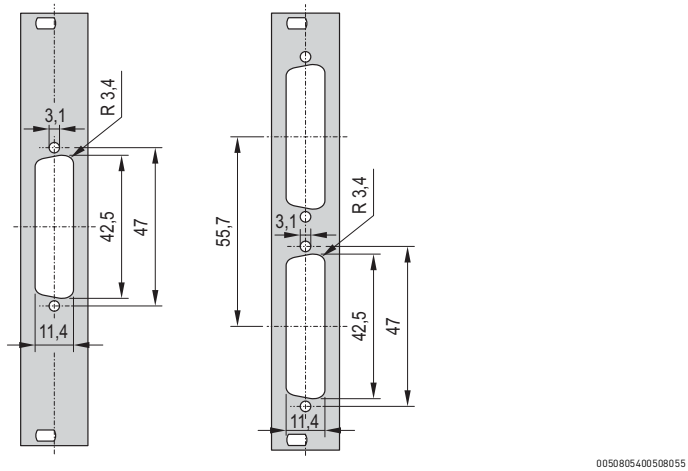

0050805400508055

Front panel Sub-D 25-pin

Note

- Please order front panels or quick-release fastener separately
- 19" assembly kit, see page 3.17
- Front panel processing to your instructions under www.frontpanelexpress.eu

FRONT PANEL EXPRESS

Cabinet Accessories – Mechanics

19" assembly kit M6

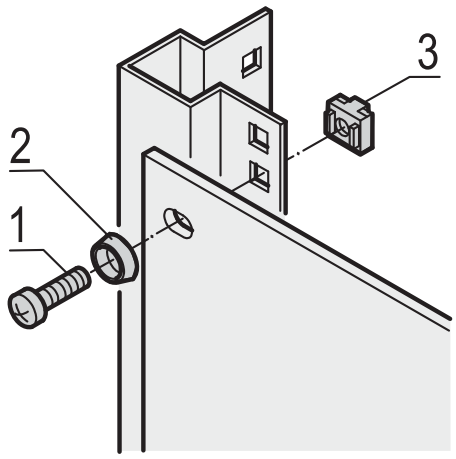

sc128

Without GND/earthing

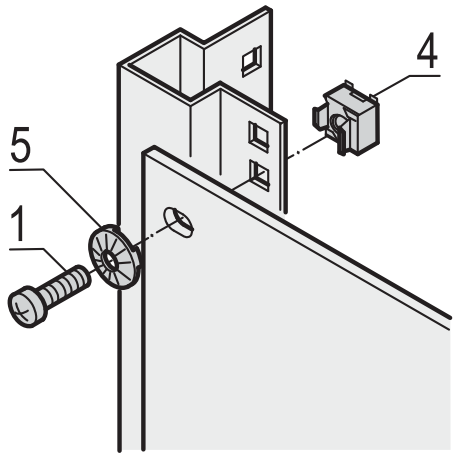

00504053

With GND/earthing

- For mounting of front panels, distribution fields or other components on the frame, slide mounts or depth members with square cut-outs
- For standard GND/earthing use a GND/earthing nut and a nomel washer on at least one attachment point

Delivery comprises

Item	Description
1	Panhead screw, M6 x 16, St, zinc-plated
2	Plastic washer, black
3	Cage nut, M6, St, zinc-plated
4	GND/earthing cage nut, M6, St, zinc-plated
5	Nomel washer, St, zinc-plated, internal diameter 6.1 mm, external diameter 12.2 mm

Order Information

Item	Description	Qty/PU	Part no.
1+2+3	19" assembly kit (screw, washer, nut)	4	**21190-095**
1+2+3	19" assembly kit (screw, washer, nut)	32	**21190-435**
1+2+3	19" assembly kit (screw, washer, nut)	50	**21101-809**
1+2+3	19" assembly kit (screw, washer, nut)	100	**21101-810**
1	Panhead screw M6, zinc-plated	50	**21100-021**
1	Panhead screw M6, zinc-plated	100	**21100-022**
1	Panhead screw M6, zinc-plated, black	100	**21100-650**
2	Plastic washer	50	**21100-015**
2	Plastic washer	100	**21100-016**
3	Cage nut M6	50	**21100-003**
3	Cage nut M6	100	**21100-004**
4	GND/earthing cage nut M6	10	**21120-131**
4	GND/earthing cage nut M6	100	**21120-132**
5	Nomel washer for GND/earthing, M6	100	**21101-173**
Delivery: supplied loose with cabinet or frame			**Part no./35**

Cage nut M4/M5

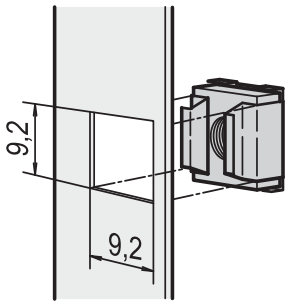

bza42733

Cage nut

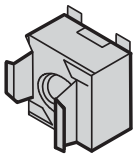

00503050

GND/earthing cage nut

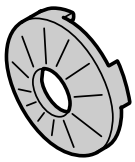

00502512

Nomel washer

- For assembly of special parts (in square holes), which require a thread diameter of M4 or M5
- For standard GND/earthing use a GND/earthing nut and a nomel washer on at least one attachment point

Order Information

Description	Description	Qty/PU	Part no.
Cage nut M4	St, zinc-plated, for material thickness of 1.8 to 2.6 mm	50	21100-001
Cage nut M4	St, zinc-plated, for material thickness of 1.8 to 2.6 mm	100	21100-002
GND/earthing cage nut M4	St, zinc-plated, for material thickness 1.8 to 2.6 mm	10	21120-127
GND/earthing cage nut M4	St, zinc-plated, for material thickness 1.8 to 2.6 mm	100	21120-128
Nomel washer M4 for GND/ earthing	St, zinc-plated, inner diameter 4.1 mm, external diameter 8 mm	100	21120-148
Cage nut M5	St, zinc-plated, for material thickness of 1.8 to 2.6 mm	50	21100-215
Cage nut M5	St, zinc-plated, for material thickness of 1.8 to 2.6 mm	100	21100-216
GND/earthing cage nut M5	St, zinc-plated, for material thickness 1.8 to 2.6 mm	10	21120-129
GND/earthing cage nut M5	St, zinc-plated, for material thickness 1.8 to 2.6 mm	100	21120-130
Nomel washer M5 for GND/ earthing	St, zinc-plated, inner diameter 5.1 mm, external diameter 10.2 mm	100	21120-149
Delivery: supplied loose with cabinet or frame			Part no./35

Cabinet Accessories – Mechanics

Square nut M6

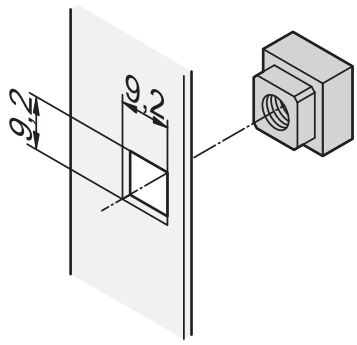

bza42735

Square nut

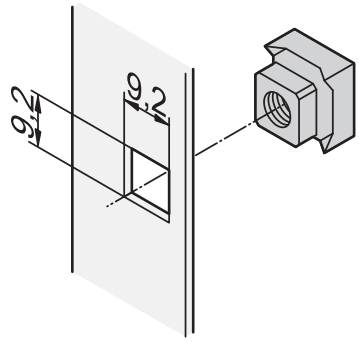

06704051

Square GND/earthing nut

- For precise, anti-twist secure mounting without clearance
- For standard GND/earthing use a square GND/earthing nut and a nomel washer on at least one attachment point

Order Information

Description	Description	Qty/PU	Part no.
Square nut M6	St, zinc-plated, for material thickness of 3.7 mm	50	**21100-558**
Square nut M6	St, zinc-plated, for material thickness of 3.7 mm	100	**21101-007**
Square GND/ earthing nut M6	St, zinc-plated, for material thickness of 1.5 mm	50	**21101-172**
Square GND/ earthing nut M6	St, zinc-plated, for material thickness of 3.5 mm	50	**21101-171**
Nomel washer for GND/earthing, M6	St, zinc-plated, inner diameter 6.1 mm, external diameter 12.2 mm	100	**21101-173**
Delivery: supplied loose with cabinet or frame			**Part no./35**

Mounting aid for cage nuts

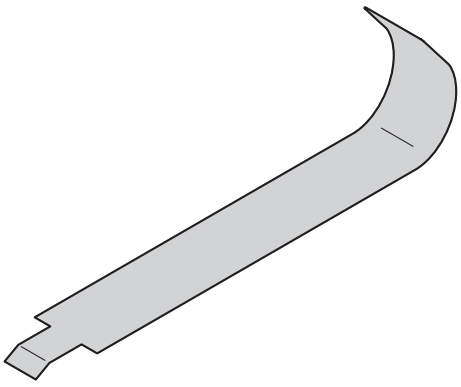

06708057

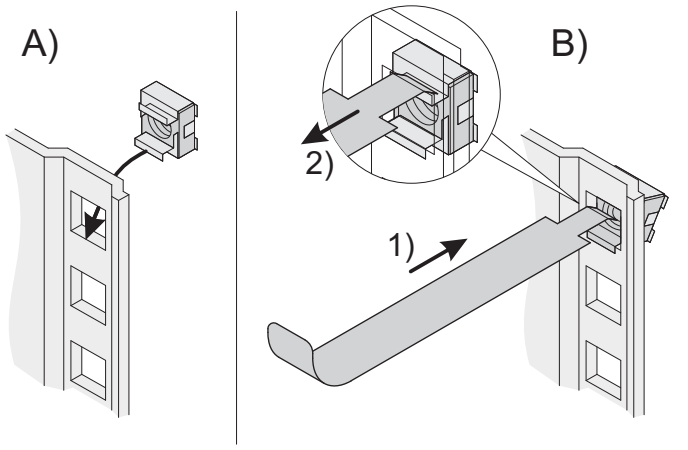

06708056

- To fit/remove cage nuts

Order Information

Description	Qty/PU	Part no.
Mounting aid for cage nuts	1	**21127-990**
Delivery: supplied loose with cabinet or frame		**Part no./35**

Cabinet Accessories – Mechanics

Sandwich cable clamping for C profiles

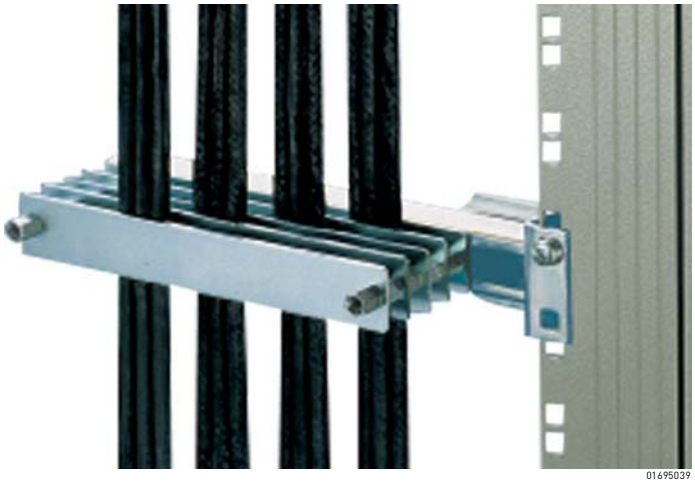

- Cable ducting in up to 5 planes
- For cable diameter of 4 ... 7 mm, usable width 190 mm

Delivery comprises (Kit)

Item	Qty	Description
1	6	Pressure plate, 15 x 250 mm, St, 2.5 mm, chromated and zinc-plated, bolt spacing 200 mm
2	10	Rubber strip
3	10	Spacer M6 for cable diameter of 4 ... 7 mm
4	1	Assembly kit

Order Information

Description	Part no.
Sandwich cable clamping for C profiles	20118-740
Delivery: supplied loose with cabinet or frame	Part no./35

Cable ties

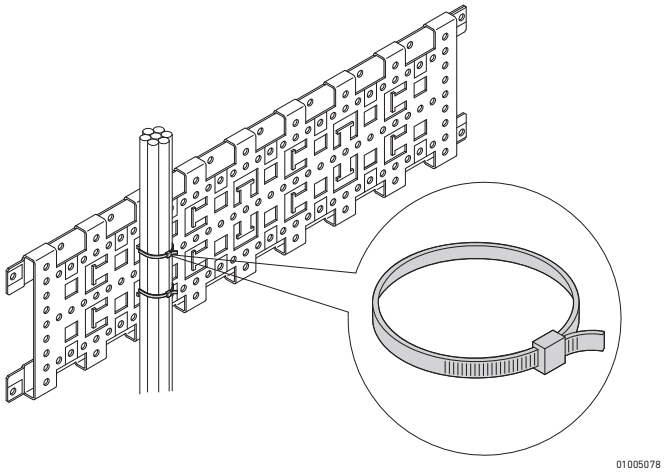

Delivery comprises

Item	Qty	Description
1	25	Cable tie, plastic

Order Information

Description		Part no.
Cable ties	186 mm x 5 mm	20118-352
Cable ties	360 mm x 5 mm	20118-353
Cable ties	92 mm x 2.5 mm	20118-351
Delivery: supplied loose with cabinet or frame		Part no./35

Velcro

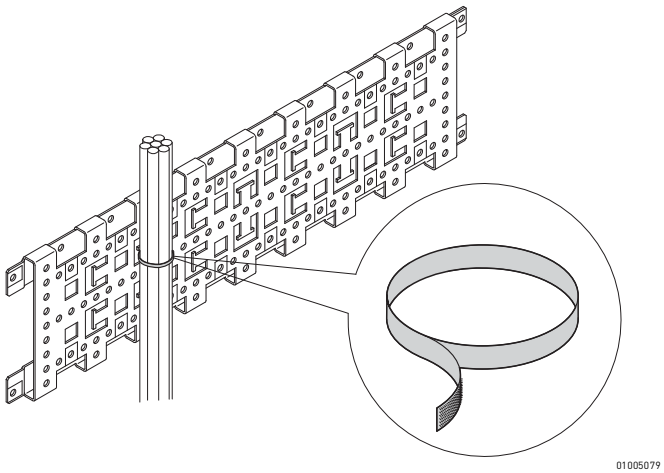

- Length 300 mm (for cable bundles of max. 90 mm diameter)

Order Information

Description	Part no.
Velcro strip, Polyethylen/Polyamide, black, length 300 mm, PU 10 pieces	20118-624
Delivery: supplied loose with cabinet or frame	Part no./35

Cabinet Accessories – Mechanics

Cable support

00592015

Cable support with return spring

00592016

Cable support without return spring

- For cable support on pull-out devices and chassis
- Cable fixing with cable ties
- 2 versions:
  - Cable support **with** return spring for a uniform cabling matched to the extraction movements
  - Cable support **without** return spring, connected directly to pull-out part

Order Information

Description	Qty/PU	Part no.
Cable support **with** return spring	1	**20118-729**
Cable support **without** return spring	1	**20118-706**
Accessories		
Cable ties 92 mm x 2.5 mm, PU 25 pieces		**20118-351**
Delivery: supplied loose with cabinet or frame		**Part no./35**

Technical data

	Cable support with return spring	Cable support without return spring
Load-carrying capacity	2 kg	5 kg
Extension length	730 mm	720 mm
Space requirement in retracted position	25 mm	25 mm
Material	St, square tube, 16 mm^2, zinc-plated	St profile, 1 mm, zinc-plated

Note

- 19" assembly kit see page 3.17

Cable channel

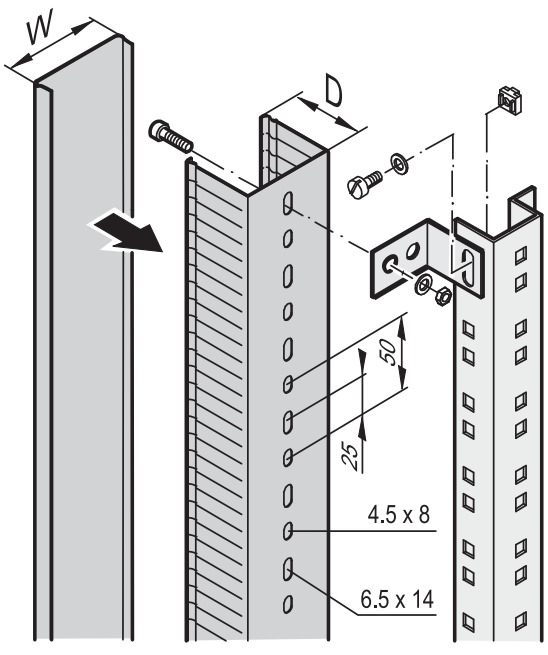

SC78

- For cable ducting in lateral and rear cabinet areas
- For mounting on cabinet uprights, depth members or C-profiles

Delivery comprises

Item	Qty	Description
1	1	Cable channel, 2 m, plastic, grey

Order Information

Depth D mm	Width W mm	Length mm	Part no.
60	30	2000	**60103-011**
60	60	2000	**60103-010**
Accessories			
Assembly kit for cable channel (4 brackets, screws, washers, nuts, cage nuts)			**21100-123**
Delivery: supplied loose with cabinet or frame			**Part no./35**

Note

- Please order assembly kit for cable channel separately

Simple telescopic slide for assembly of subracks in cabinets

- For mounting 84 HP wide subracks in the 19" plane
- Loading capacity: 25 kg per pair
- The guiding profile is matched to the fixing dimension in the cabinet (it is bolted to the 19" profile of the cabinet); the adaptor rail is matched to the depth and fixing dimension on the subrack (it is inserted into the guiding profile like a telescopic slide)
- Safety note:
  No protection against extraction, no stop at full extension

Telescopic slides with guiding profile for fitting in cabinets

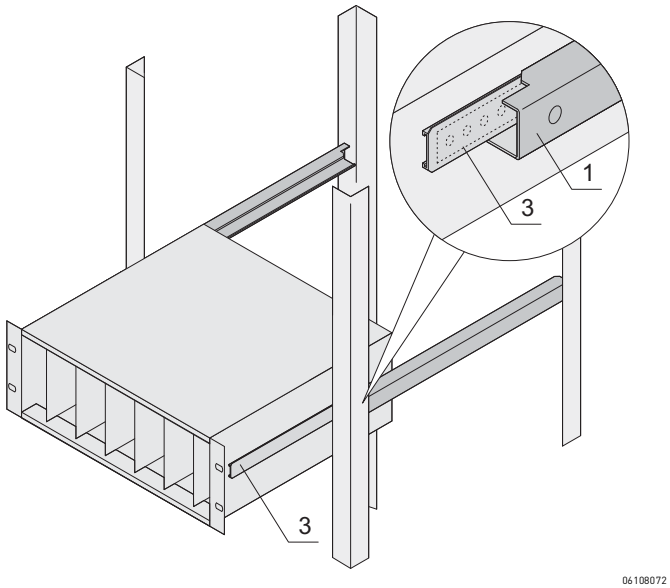

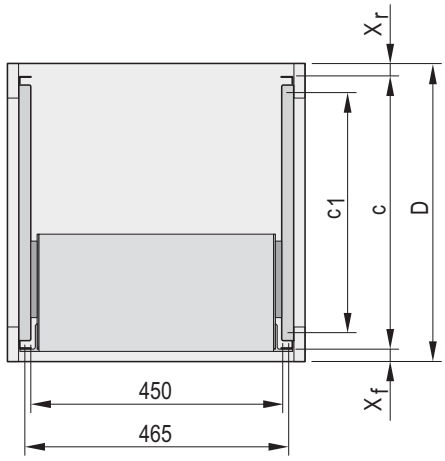

x_f, x_r: Distance of 19" plane to cabinet edge (front, rear)
c: Distance of 19" planes from each other,
c1: Fixing dimension of guiding profile on 19" panel/slide mounts

Delivery comprises (kit)

Item	Qty	Description
1	2	C-profile, Al
2	1	Assembly kit

Order Information

For cabinet range	Depth D mm	x_f mm	x_r mm	C mm	c1 mm	Part no.
VARISTAR	600	50	50	500	369	**24562-464**
VARISTAR	800	50	50	700	569	**24562-466**
VARISTAR	900	50	50	800	669	**24562-467**
VARISTAR	1000	50	50	900	769	**24562-468**
VARISTAR	1100	50	50	1000	869	**24562-472**
VARISTAR	1200	50	50	1100	969	**24562-473**
eurorack	600	60	60	480	397	**24562-449**
eurorack	800	60	60	680	597	**24562-451**
eurorack	900	60	60	780	697	**24562-452**
Novastar	500	33	60	407	350	**24562-460**
Novastar	600	33	60	507	450	**24562-461**
Novastar	800	33	60	707	650	**24562-474**
Lab rack	250	0	0	250	162	**24562-446**
Delivery: supplied loose with cabinet or frame						**Part no./35**

Note

- Adapter rail see page 3.23

Cabinet Accessories – Mechanics

Telescopic slides with adaptor rail for subracks

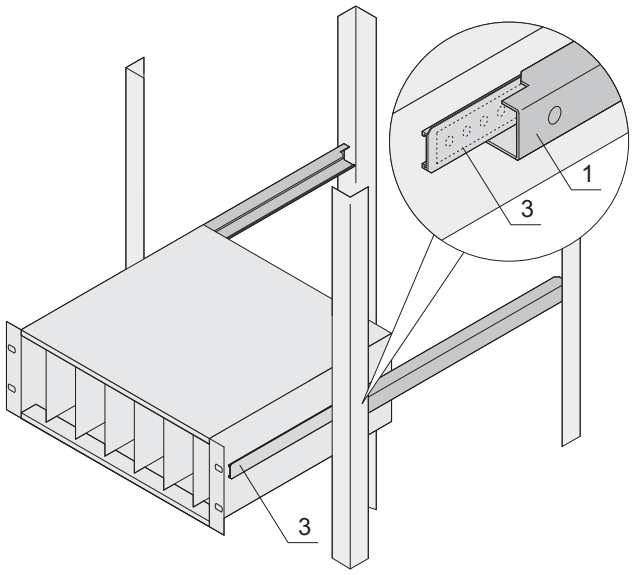

06108072

- The rail serves for fixing the subrack on the guiding profile when mounted into a cabinet

Delivery comprises (kit)

Item	Qty	Description
3	2	Al extrusion, incl. M4 threaded insert
4	1	Assembly kit

Order Information

For subrack depth mm	Part no.
175	**24562-453**
235	**24562-454**
295	**24562-455**
355	**24562-456**
415	**24562-457**
475	**24562-458**
Delivery: supplied loose with cabinet or frame	**Part no./35**

Note

- Suitable guiding profile see page 3.22

Measuring tape

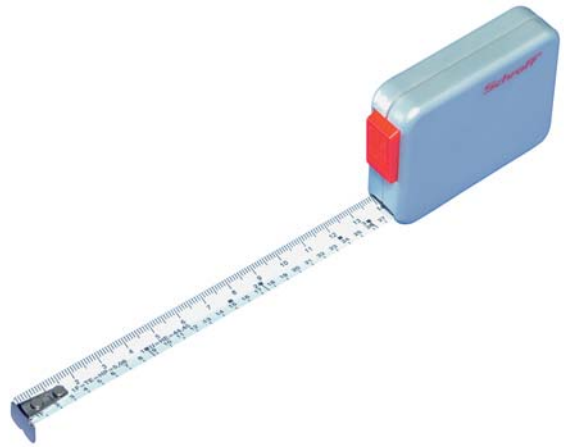
32506001

- Measuring tape with cm, U-, HP-division (length 2 m)
- Plastic case, metal tape measure with automatic retraction

Order Information

Description	Qty/PU	Part no.
Tape measure	1	**89009-001**

Dimensioning of telescopic slides

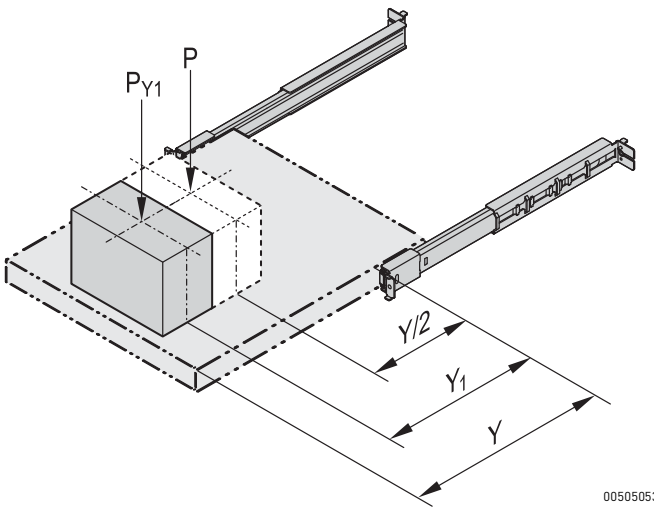

00505053

Calculation of the load-carrying capacity

The stated load-carrying capacity P is valid provided that the centre of gravity is in the centre of the extraction (Y/2).
For a different position of the centre of gravity (Y_1) please use the following formula:
Load-carrying capacity $P(Y_1)$ = ½ P Y/Y_1 (but max. P)

Example:
Load-carrying capacity P = 45 kg,
Extension length Y = 250 mm
Position of centre of gravity Y_1 = 150 mm

Result:
$P(Y_1)$ = ½ P Y/Y_1 = ½ x 45 kg x 250/150 = 37.5 kg

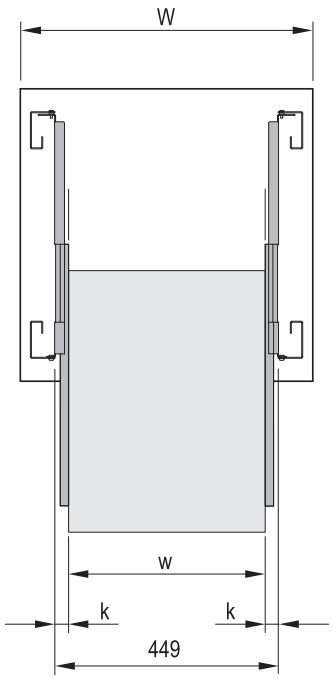

00505060

Calculation of the maximum installation width (w)

For each telescopic slide the maximum installation width (w) for one shelf or drawer is given. This is the maximum clearance available between the telescopic slides when they are fitted in a 19" cabinet.

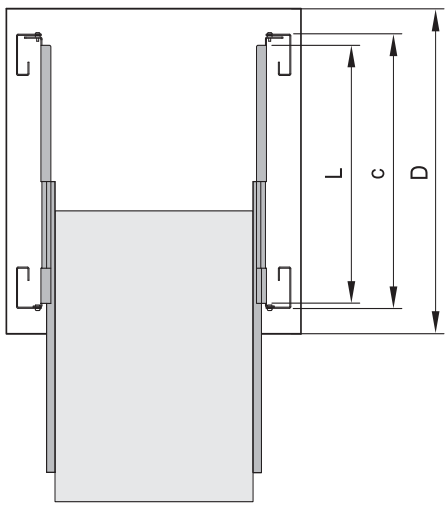

00505061

Mounting on 19" panel/slide mounts

In 19" cabinets, telescopic slides are mounted on the front and rear 19" panel/slide mounts.
The length (L) must therefore be matched with the distance between the 19" brackets (depthwise). For this the required 19" pitch (c) is given for each cabinet.

Cabinet Accessories – Telescopic slides

Telescopic slide, narrow, for subrack

00516001

- Suitable for 84 HP width subracks (type F, type H, type L)
- Locks at full extension
- Hinged
- Extension length > 100 %
- Rail width 7.5 mm
- Maximum clear width of extension/drawer w = 84 HP (435 mm)

Delivery includes

Item	Qty	Description
1	2	Telescopic slide, St, zinc-plated

Order Information

Length L	Extension length Y	Load-carrying capacity P	Part no.
mm	mm	kg	
356	See table Technical data	15	**60110-441**
559	See table Technical data	15	**60110-440**
Accessories			
Fixing materials kit for Varistar, to mount 2 telescopic slides, PU 1 kit			**21120-193**
Fixing materials kit for Novastar, to mount 2 telescopic slides, PU 1 kit			**21120-194**
Delivery: supplied loose with cabinet or frame			**Part no./35**

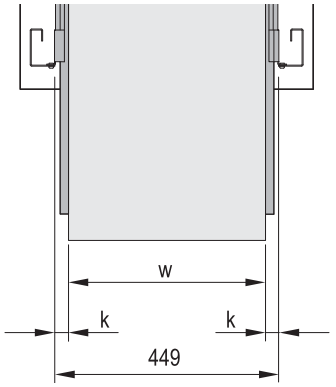

00505060

k = rail width 7.5 mm,
w = max. installation width
84 HP (435 mm)

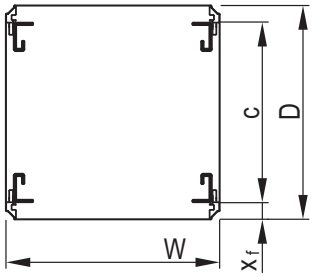

01004146

C dimensions:
Varistar 500 mm and 700 mm,
Novastar 507 mm to 707 mm

Technical data

Length L	Extension length Y		
	Varistar SL/HD	Novastar SL	Novastar HD
mm	mm	mm	mm
356	350	362	352
559	553	565	555

Note

- To mount on 19" plane please order assembly kit separately

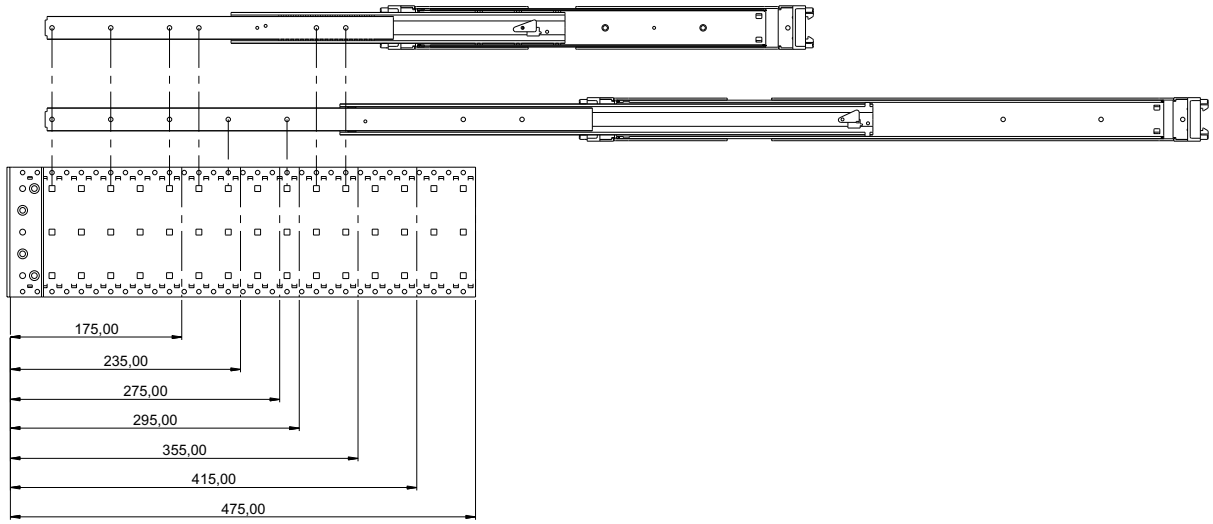

00515050

Screw-on position for telescopic slide on side panel of subrack

Universal telescopic slide, 1 U

- Static load-carrying capacity per pair 23 - 39 kg
- Lateral mounting on the 19" uprights (19" plane remains free for fixing the extension/drawer)
- Can be removed
- Extension length > 100 %
- Rail width k = 9.7 mm,
  max. installation width of extension/drawer w = 429 mm

Delivery comprises

Item	Qty	Description
1	2	Telescopic slide, St, zinc-plated

Order Information

Length L	Extension length Y	Load-carrying capacity P	Part no.
mm	mm	kg	
356	381	39	**20110-090**
406	432	36	**20110-091**
457	483	34	**20110-092**
508	533	32	**20110-093**
559	584	29	**20110-094**
610	635	27	**20110-095**
660	686	23	**20110-096**
711	737	23	**20110-097**
Accessories			
Assembly kit For VARISTAR, for assembly of 2 telescopic slides, PU 1 kit			**21120-158**
Assembly kit For eurorack, for assembly of 2 telescopic slides, PU 1 kit			**21120-159**
Assembly kit for NOVASTAR, to mount 2 telescopic slides, PU 1 kit			**21120-160**
Delivery: supplied loose with cabinet or frame			**Part no./35**

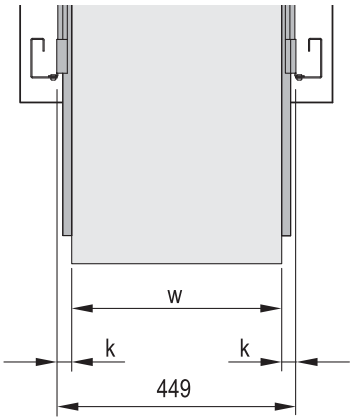

00505011

00505060005055

k = rail width, w = max. installation width

Dimensions table

L	Internal part								External part		
	A	B	C	D	E	F	G	X	O	P	Q
356	29.5	92.1	184.2	276.2	-	-	-	349.3	304.6	317.3	330.0
406	29.5	92.1	184.2	276.2	-	-	-	349.3	355.4	368.1	380.8
457	29.5	92.1	184.2	276.2	-	-	-	349.3	406.4	419.1	431.8
508	89.9	92.1	184.2	276.2	368.3	-	-	501.7	457.4	470.1	482.8
559	89.9	92.1	184.2	276.2	368.3	-	-	501.7	508.1	520.8	533.5
610	89.9	92.1	184.2	276.2	368.3	-	-	501.7	558.6	571.3	584.0
660	7.4	92.1	184.2	276.2	368.3	460.4	552.4	603.3	609.4	622.1	634.8
711	7.4	92.1	184.2	276.2	368.3	460.4	552.4	603.3	660.2	672.9	685.6

Note

- To mount on 19" plane please order assembly kit separately
- Universal telescopic rails can also be fitted without additional components in non-standard applications, thus also in other than 19" cabinets

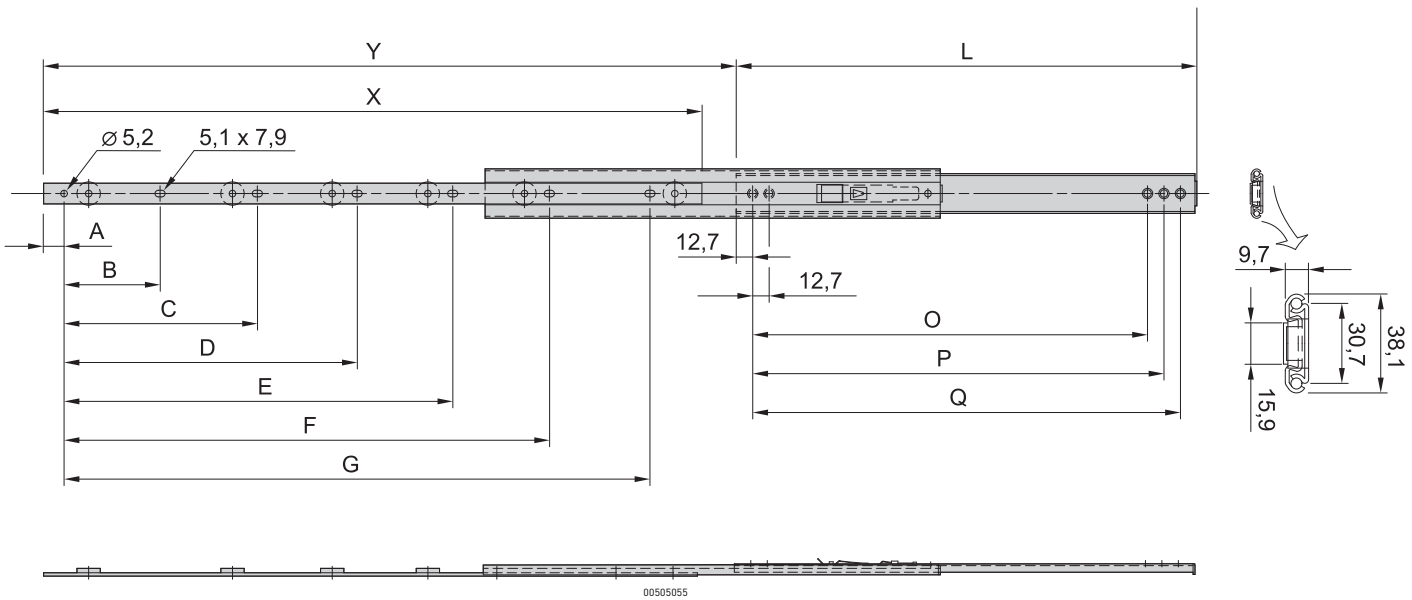

00505055

Cabinet Accessories – Telescopic slides

Universal telescopic slide, 2 U

- Static load-carrying capacity per pair 46 - 61 kg
- Lateral mounting on the 19" uprights (19" plane remains free for fixing the extension/drawer)
- Locking at full extension
- Extension length > 100 %
- Rail width k = 16 mm,
  max. installation width of extension/drawer w = 417 mm

00505010

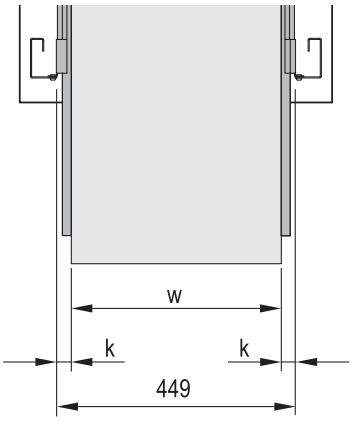

0050506000505054

k = rail width, w = max. installation width

Dimensions table

Length L	Internal part				External part			
	A	B	C	X	D	E	F	G
305	76.2	177.8	254.0	305.0	76.2	190.5	241.3	266.7
356	101.6	203.2	304.8	356.0	88.9	215.9	292.1	317.5
406	127.0	228.6	355.6	406.0	127.0	241.3	342.9	368.3
457	127.0	279.4	406.4	457.0	127.0	292.1	393.7	419.1
508	152.4	304.8	457.2	508.0	152.4	317.5	444.5	469.9
559	177.8	330.2	508.0	559.0	177.8	342.9	495.3	520.7
610	177.8	381.0	558.8	610.0	177.8	393.7	546.1	571.5
660	203.2	406.4	609.6	660.0	203.2	419.1	596.9	622.3
711	228.6	431.8	660.4	711.0	228.6	444.5	647.7	673.1

Delivery comprises

Item	Qty	Description
1	2	Telescopic slide, St, zinc-plated

Order Information

Length L	Extension length Y	Load-carrying capacity P	Part no.
mm	mm	kg	
305	330	61	**20110-100**
356	381	60	**20110-101**
406	432	58	**20110-102**
457	483	57	**20110-103**
508	533	55	**20110-104**
559	584	52	**20110-105**
610	635	50	**20110-106**
660	686	48	**20110-107**
711	737	46	**20110-108**
Accessories			
Assembly kit For VARISTAR, for assembly of 2 telescopic slides, PU 1 kit			**21120-158**
Assembly kit For eurorack, for assembly of 2 telescopic slides, PU 1 kit			**21120-159**
Assembly kit for NOVASTAR, to mount 2 telescopic slides, PU 1 kit			**21120-160**
Delivery: supplied loose with cabinet or frame			**Part no./35**

Note

- To mount on 19" plane please order assembly kit separately
- Universal telescopic rails can also be fitted without additional components in non-standard applications, thus also in other than 19" cabinets

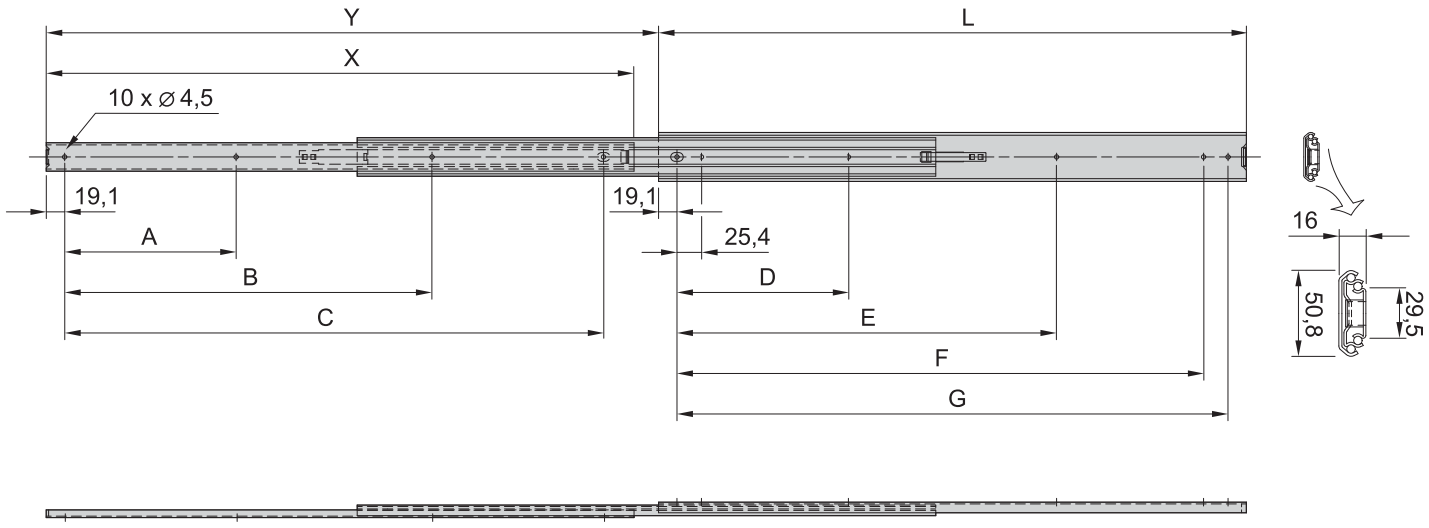

Slim universal telescopic slide, 2 U

- Static load-carrying capacity per pair 46 - 57 kg
- Lateral mounting on the 19" uprights (19" plane remains free for fixing the extension/drawer)
- Locking at full extension
- Extension length > 110 %
- Rail width k = 9.7 mm, max. installation width of extension/drawer w = 429 mm

Delivery comprises

Item	Qty	Description
1	2	Telescopic slide, St, zinc-plated

Order Information

Length L	Extension length Y	Load-carrying capacity P	Part no.
mm	mm	kg	
356	432	57	**20110-071**
406	483	55	**20110-072**
457	533	55	**20110-073**
508	584	55	**20110-074**
559	635	46	**20110-075**
584	660	46	**20110-076**
610	686	46	**20110-077**
Accessories			
Assembly kit for VARISTAR, for assembly of 2 telescopic slides, PU 1 kit			**21120-161**
Assembly kit for eurorack, for assembly of 2 telescopic slides, PU 1 kit			**21120-162**
Telescopic slides mounting kit for NOVASTAR, to mount 2 telescopic slides, PU 1 kit			**21120-163**
Delivery: supplied loose with cabinet or frame			**Part no./35**

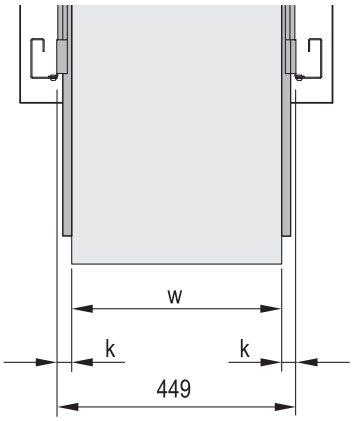

00505009

00505060005059

k = rail width, w = max. installation width

Dimensions table

Length L	Internal part				External part		
	A	w	C	X	D	E	F
356	101.6	184.2	304.8	356.0	101.6	228.6	330.2
406	127.0	209.6	355.6	406.0	127.0	254.0	381.0
457	127.0	235.0	406.4	457.0	152.4	279.4	431.8
508	152.4	260.4	457.2	508.0	152.4	330.2	482.6
559	203.2	412.8	508.0	559.0	177.8	355.6	533.4
584	203.2	431.8	533.4	584.0	177.8	381.0	558.8
610	203.2	438.2	558.8	610.0	203.2	381.0	584.2

Note

- To mount on 19" plane please order assembly kit separately
- Universal telescopic rails can also be fitted without additional components in non-standard applications, thus also in other than 19" cabinets

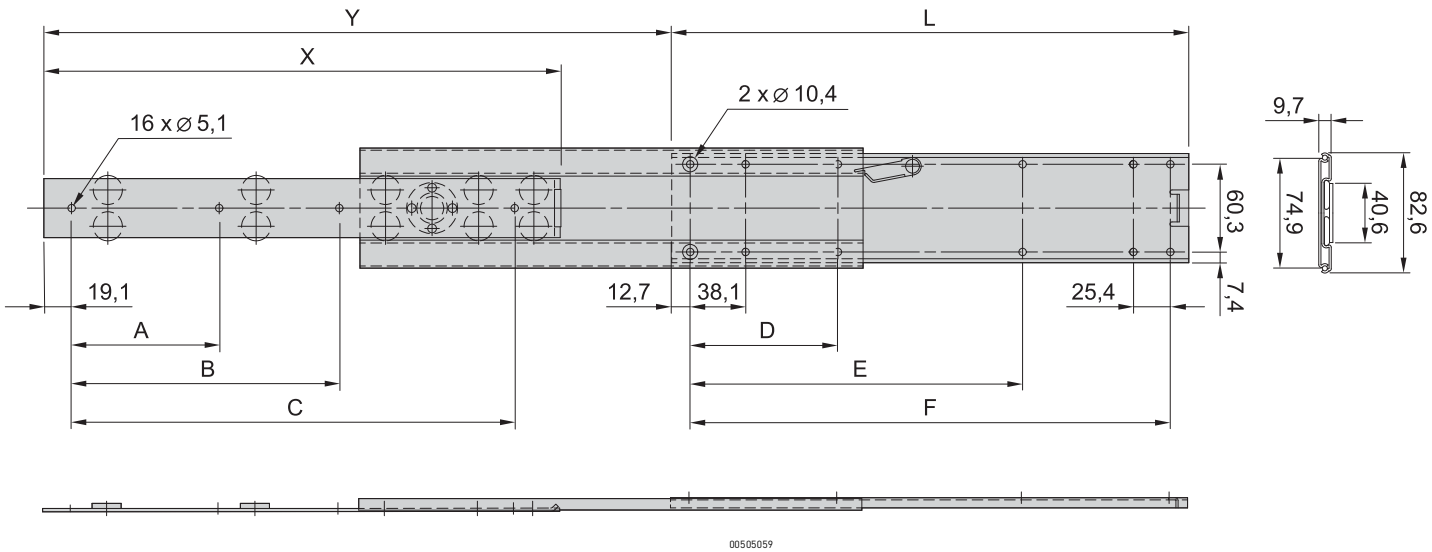

00505059

Cabinet Accessories – Telescopic slides

Heavy load universal telescopic slide, 2 U

- Static load-carrying capacity per pair 72 - 100 kg
- Lateral mounting on the 19" uprights (19" plane remains free for fixing the extension/drawer)
- End stop damped
- Extension length > 100 %
- Rail width k = 19.1 mm, max. installation width of extension/drawer w = 411 mm

00508011

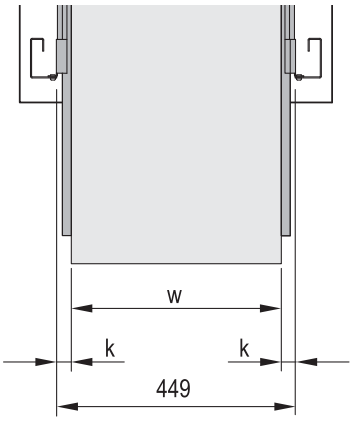

0050506000507053

k = rail width, w = max. installation width

Delivery comprises

Item	Qty	Description
1	2	Telescopic slide, St, zinc-plated

Order Information

Length L	Extension length Y	Load-carrying capacity P	Part no.
mm	mm	kg	
300	473	77	**20110-190**
350	573	83	**20110-191**
400	423	88	**20110-192**
450	473	94	**20110-193**
500	523	100	**20110-194**
550	573	94	**20110-195**
600	623	88	**20110-196**
700	723	72	**20110-198**
Accessories			
Assembly kit for VARISTAR, for assembly of 2 telescopic slides, PU 1 kit			**21120-164**
Assembly kit for eurorack, for assembly of 2 telescopic slides, PU 1 kit			**21120-165**
Assembly kit for NOVASTAR, to mount 2 telescopic slides, PU 1 kit			**21120-166**
Delivery: supplied loose with cabinet or frame			**Part no./35**

Dimensions table

Length L	Y	Inner part (mm)			External part (mm)			
mm	mm	A	B	X	C	E	F	G
300	473.5	-	-	300	192	224	-	-
350	573.5	-	-	350	224	256	-	-
400	423,5	128	160	400	288	320	160	192
450	473.5	128	160	450	320	352	160	192
500	523,5	160	192	500	384	416	192	224
550	573.5	160	192	550	416	448	192	224
600	623,5	192	256	600	480	512	256	288
650	673.5	192	256	650	544	576	256	288
700	723,5	256	288	700	576	608	288	320

Note

- To mount on 19" plane please order assembly kit separately
- Universal telescopic rails can also be fitted without additional components in non-standard applications, thus also in other than 19" cabinets

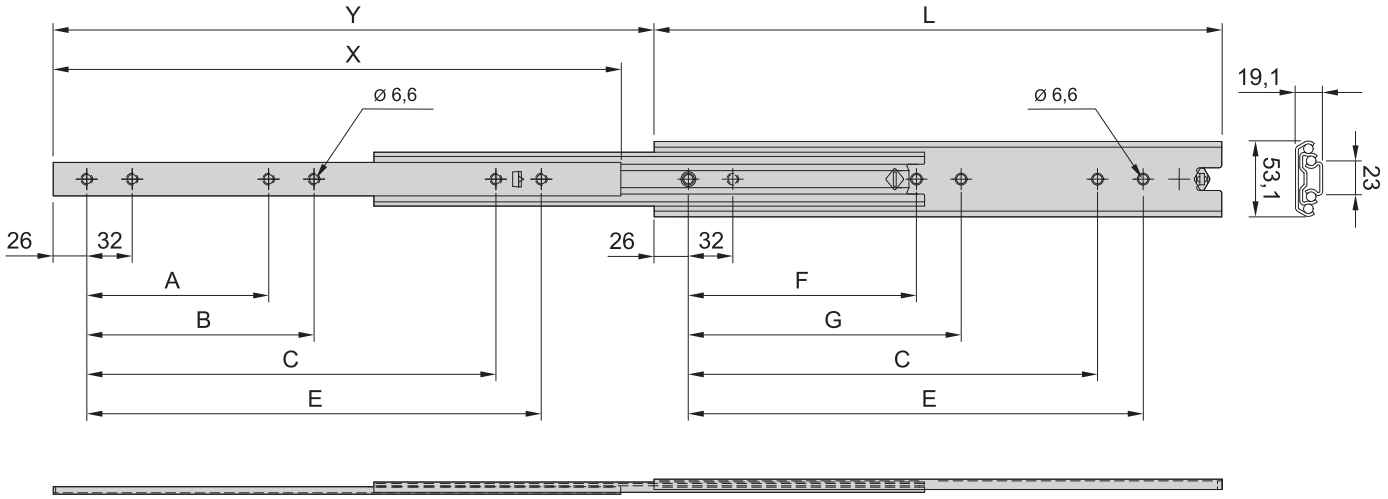

Cabinet light for 19" assembly

00504006

- With mains on/off switch
- Mounting height 1 U

Delivery comprises

Item	Qty	Description
1	1	19" cabinet light with fluorescent tube and mains switch, 1 U, IEC 60320 C14 plug
1	1	Assembly kit

Order Information

Description	Part no.
Cabinet light for 19" assembly	20118-746
Accessories	
Equipment cable, BS British Standard plug, IEC 60320 C13 socket, 2.5 m, 1 piece	60103-137
Mains cable, IEC IEC 60320 C14 plug, IEC 60320 C13 socket, 2.5 m, 1 piece	60197-053
Equipment cable, SCHUKO/UTE SCHUKO/UTE plug, IEC 60320 socket, 2.5 m, 1 piece	62150-191
Door contact switch, cabled SCHUKO/UTE, "German 3-wire", earthed/grounded plug, IEC 60320 C13 socket, 1 piece	20118-753
Delivery: fitted in cabinet or on frame	**Part no./05**
Delivery: supplied loose with cabinet or frame	**Part no./35**

Technical data

Mains/line voltage	230 V_{AC}
Performance	14 W
Illuminant	Fluorescent tube T8, base G13, diameter 26 mm, length 360 mm
Connection	IEC 60320 C14 plug
Assembly	19" plane
Dimensions	Height 40 mm, width 483 mm, depth 100 mm

Note

- Please order mains cable or door contact switch separately

Cabinet Accessories – Electrics

Cabinet light for frame assembly

01695011

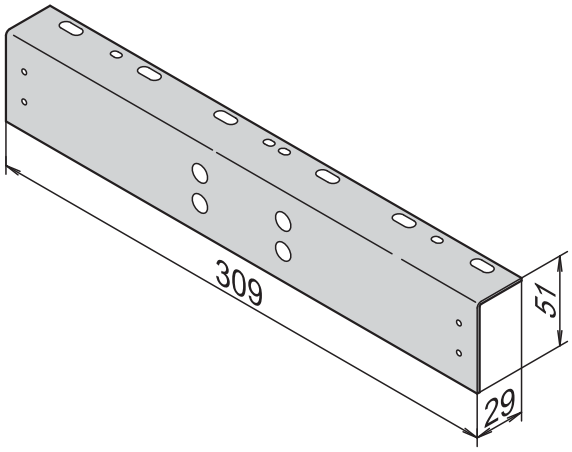

SZA45584

- With mains on/off switch
- VDE approved, non-interference

Delivery comprises

Item	Qty	Description
1	1	Incandescent light (plastic case) with connecting cable, IEC 60320 C13 plug and mains switch
2	1	Mounting angle, height 51 mm, width 309 mm, depth 29 mm
3	1	Assembly kit

Order Information

Description	Part no.
Cabinet light for frame assembly	**20118-747**
Accessories	
Equipment cable, BS British Standard plug, IEC 60320 C13 socket, 2.5 m, 1 piece	**60103-137**
Mains cable, IEC IEC 60320 C14 plug, IEC 60320 C13 socket, 2.5 m, 1 piece	**60197-053**
Equipment cable, SCHUKO/UTE SCHUKO/UTE plug, IEC 60320 C13 socket, 2.5 m, 1 piece	**62150-191**
Door contact switch, cabled SCHUKO/UTE, "German 3-wire", earthed/grounded plug, IEC 60320 C13 socket, 1 piece	**20118-753**
Delivery: fitted in cabinet or on frame	**Part no./05**
Delivery: supplied loose with cabinet or frame	**Part no./35**

Technical data

Mains/line voltage	230 V_{AC}
Performance	35 W
Illuminant	Light bulb S14s, diameter 30 mm, length 300 mm
Connection	IEC 60320 C14 plug
Assembly	With mounting bracket for the cabinet frame
Dimensions	Height 35 mm, width 309 mm, depth 51 mm

Note

- Please order mains cable or door contact switch separately

Cabinet light for magnetic mounting

007_1000

- With mains on/off switch
- With integrated SCHUKO or UTE socket, 230 V_{AC}, 16 A

Delivery comprises

Item	Qty	Description
1	1	Cabinet light (plastic case) with connecting cable, IEC 60320 C14 plug, integrated mains switch and socket

Order Information

Description	Part no.
Cabinet light for magnet mounting with UTE socket	20118-748
Cabinet light for magnet mounting, with SCHUKO socket	20118-749
Accessories	
Mains cable, BS British Standard plug, IEC 60320 C13 socket, 2.5 m, 1 piece	60103-137
Mains cable, IEC IEC 60320 C14 plug, IEC 60320 C13 socket, 2.5 m, 1 piece	60197-053
Mains cable, SCHUKO/UTE SCHUKO/UTE plug, IEC 60320 socket, 2.5 m, 1 piece	62150-191
Door contact switch, cabled SCHUKO/UTE, "German 3-wire", earthed/grounded plug, IEC 60320 C13 socket, 1 piece	20118-753
Delivery: supplied loose with cabinet or frame	**Part no./35**

Technical data

Mains/line voltage	230 V_{AC}
Performance	11 W
Illuminant	Compact fluorescent lamp PL-S, G23 base, diameter 13 mm, length 200 mm
Connection	IEC 60320 C14 plug
Socket	250 V_{AC}, 16 A
Assembly	Magnet
Dimensions	Height 355 mm, width 65 mm, depth 65 mm

Note

- Please order mains cable or door contact switch separately

Cabinet Accessories – Electrics

LED light for cabinet mounting

00516004

- Energy efficient: consumes only 5 W
- Bright: output equivalent to 95 W
- Maintenance-free, long service life
- Easy installation with magnetic mounting
- Integrated, auto-sensing circuitry for 90 ... 260 V_{AC} or 20 ... 60 V_{DC} voltages
- Versions with on/off switch or built-in infrared motion sensor
- Optional accessories: 1 U bracket for 19" installation, clip holders for clip fixing, power cables (preassembled) and connectors (male/female)

Technical data

Input	AC	DC
Input voltage	90 ... 230 V_{AC}	20 ... 60 V_{DC}
Power consumption	max. 5 W	max. 5 W
Current	max. 2.5 A / 240 V_{AC}	max. 2.5 A / 60 V_{DC}
Color	white	blue
Luminosity	400 Lm at 120° (1200 Lm at 360° or equivalent 95 W light bulb)	
Lamp type	LED, angle of radiation 120°	
Light color	Daylight, color temperature: 6000 K to 7000 K	
Service life	60000 h at +20 °C (+68 °F)	
Mounting	Magnetic mounting	
Casing	Plastic, transparent	
Dimensions	Length 351 mm (13.8"), Diameter 32 mm (1.3")	
Weight	0.2 kg | 0.5 lbs	
Operating temperature	-30 to +60 °C (-22 to +140 °F)	
Storage temperature	-40 to +85 °C (-40 to +185 °F)	
Operating/Storage humidty	max. 90 % RH (non-condensing)	
Protection type	IP 20	
Protection class	II (double insulated)	III (12 V_{DC}, extra-low voltage)

Order Information

LED light for cabinet mounting Description	Input	Input voltage V	Qty/PU piece	Part no.
With IR motion sensor	AC	90 ... 260 V_{AC}	1	**60118-542**
With on/off switch	AC	90 ... 260 V_{AC}	1	**60118-543**
With IR motion sensor	DC	20 ... 60 V_{DC}	1	**60118-544**
With on/off switch	DC	20 ... 60 V_{DC}	1	**60118-545**
Accessories				
Input cable for AC, length 2.0 m / 78.7 inch, 1 piece				**60118-546**
Input cable for DC, length 2.0 m / 78.7 inch, 1 piece				**60118-547**
Extension cable for AC, length 1.0 m / 39,4 inch, 1 piece				**60118-548**
Extension cable for DC, length 1.0 m / 39,4 inch, 1 piece				**60118-549**
Connection cable with IEC 60320 C18 connector for AC, length 0,5 m / 19,7 inch, 1 piece				**60130-114**
Female connector for AC, 1 piece				**60118-550**
Female connector for DC, 1 piece				**60118-551**
Male connector for AC, 1 piece				**60118-552**
Male connector for DC, 1 piece				**60118-553**
Bracket 19" 1 U, RAL 7021 (black) 1 piece				**20118-807**
Bracket 19" 1 U, RAL 7035 (grey) 1 piece				**20118-808**
Clip kit PU 2 pieces				**20118-809**

Door contact switch

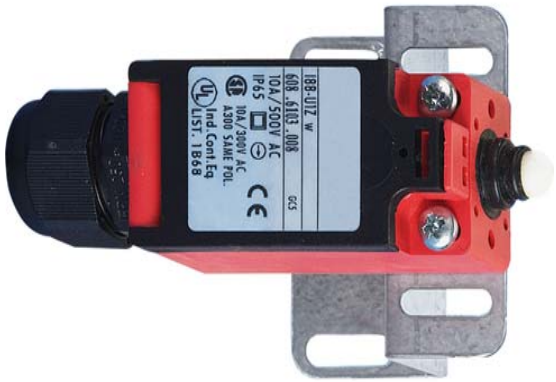

00505029

Delivery comprises

Item	Qty	Description
1	1	Door contact switch (without connecting cable)
2	1	PG screw fitting M20 x 1.5 for cable diameter 6 ... 12 mm
3	4	Mounting angle for cabinet assembly (VARISTAR, PROLINE, eurorack)
4	1	Assembly kit

Order Information

Description	Part no.
Door contact switch	20118-738
Delivery: fitted in cabinet or on frame	**Part no./05**
Delivery: supplied loose with cabinet or frame	**Part no./35**

Door contact switch, cabled

00505028

- Connection to cabinet light via IEC 60320 C13 socket
- Connection with mains supply via SCHUKO/UTE connector
- Easy handling by plug and play (completely wired)

Delivery comprises (completely wired)

Item	Qty	Description
1	1	Door contact switch with connecting cable to IEC 60320 C13 socket, plug and mains connection SCHUKO/UTE, fully wired
2	1	PG screw fitting M20 x 1.5 for cable diameter 6 ... 12 mm
3	4	Mounting angle for cabinet assembly (VARISTAR, PROLINE, eurorack)
4	1	Assembly kit

Order Information

Description	Part no.
Door contact switch, cabled	20118-753
Delivery: fitted in cabinet or on frame	**Part no./05**
Delivery: supplied loose with cabinet or frame	**Part no./35**

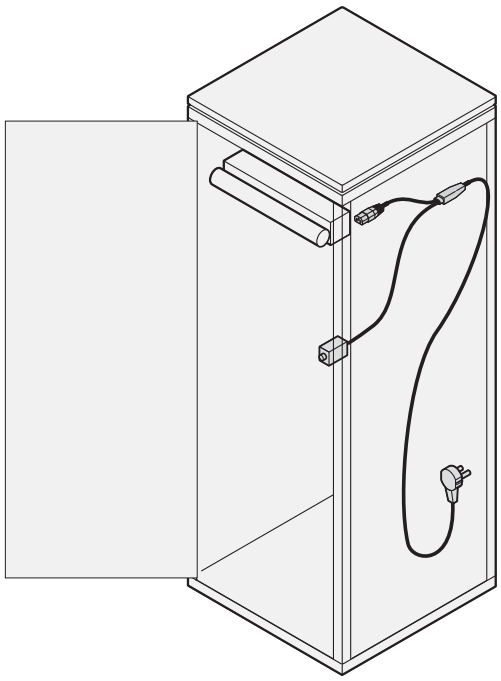

00501501

Cabinet Accessories – Electrics

19" distribution box

01495004

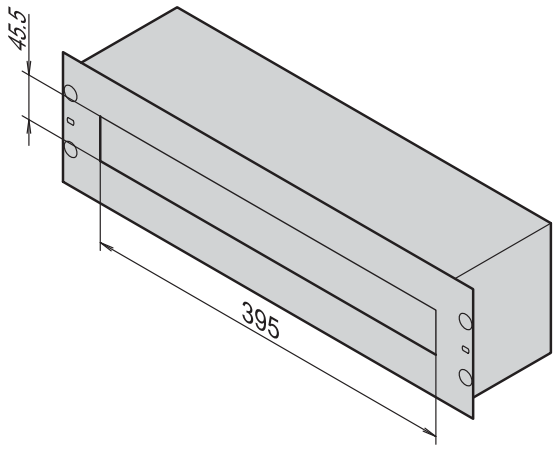

sza45585

- For installation of power distribution modules on DIN profile rails (DIN 43880)
- With cable support rail on the rear side, strain relief with clamps
- Two neutral conductors for terminal clamps from 4 ... 35 mm^2

Delivery comprises (assembled)

Item	Qty	Description
1	1	Case, 2 parts, 3 U/84 HP, AlZn
2	1	Front panel with cut-out for power distribution module, St, 1 mm, RAL 7035
3	2	Neutral conductors for terminal clamps, Cu, 200 x 3 x 10 mm, zinc-plated, insulated mounting
4	1	DIN profile rail, St, zinc-plated, depth-adjustable with spacing bolts
5	1	Cable support rail for clamps, zinc-plated
6	1	Brush strip, plastic, black, for cable entry
7	2	Sealing strip, fibre glass reinforced Polyester, for unused module positions
8	1	GND/earthing conductor, Cu, 1.5 mm^2, green/yellow, length 360 mm
9	1	Label strip

Order Information

Description	Part No.
19" distribution box	**60118-434**
19" distribution box (with packaging for overseas shipping)	**60118-521**
Accessories	
Terminal clamps for 19" distribution box 4 mm^2, yellow/green, PU 10 pieces	**21101-529**
Terminal clamps for 19" distribution box 4 mm^2, blue (N),PU 10 pieces	**21101-532**
Terminal clamps for 19" distribution box 16 mm^2, yellow/green (PE),PU 10 pieces	**21101-530**
Terminal clamps for 19" distribution box 16 mm^2, blue (N),PU 10 pieces	**21101-533**
Terminal clamps for 19" distribution box 35 mm^2, yellow/green (PE),PU 10 pieces	**21101-531**
Terminal clamps for 19" distribution box 35 mm^2, blue (N),PU 10 pieces	**21101-534**
Clamps for 19" distribution box, PU 14 pieces	**21190-753**
Delivery: supplied loose with cabinet or frame	**Part no./35**

Note

- 19" assembly kit, see page 3.17
- Power distribution module, see page 3.36

Connection clamp

01695012

Clamps

01695034

Small distribution module

01695010

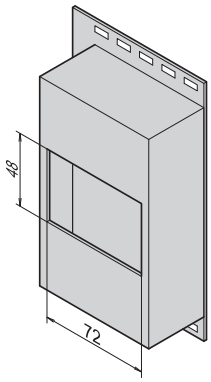

SZA45586

- For the installation of power distribution modules on DIN profile rails (DIN 43880)

Delivery comprises

Item	Qty	Description
1	1	Small distribution module, plastic, light grey, with integrated DIN profile rail
2	1	Mounting plate for cabinet mounting, Al, 2.5 mm
3	1	Cover strip, plastic, light grey, for unused module spaces
4	1	Assembly kit for cabinet assembly

Order Information

Description	Part no.
Small distribution module	**20118-538**
Delivery: supplied loose with cabinet or frame	**Part no./35**

Note

- Power distribution module, see page 3.36

Power distribution modules in accordance with DIN 43880

01695005

Circuit breakers

FI safety switch

01695004 01695003

Socket

- For fitting into 19" distribution box or small distribution module
- Snaps onto DIN profile rail

Order Information

Description	Width mm	Part no.
Circuit breaker 1 x 16 A	17.7	**20119-355**
Circuit breaker 3 x 16 A	53.5	**20119-356**
FI safety switch, 16 A, 30 mA	46	**20119-354**
SCHUKO socket 250 V, 16 A	44	**20119-357**
UTE socket 250 V, 16 A	44	**20119-358**
Delivery: supplied loose with cabinet or frame		**Part no./35**

Cabinet Accessories – Electrics

Distribution box

01695009

Delivery comprises

Item	Qty	Description
1	1	Distribution box, plastic, light grey
2	1	Terminal strip, 5-pin, for cable cross section 2.5 mm^2
3	1	Mounting plate, Al, 2.5 mm, for cabinet assembly
4	1	Assembly kit for cabinet assembly

Order Information

Description	Part no.
Distribution box	**20118-536**
Delivery: supplied loose with cabinet or frame	**Part no./35**

Distribution box with SCHUKO socket

01604004

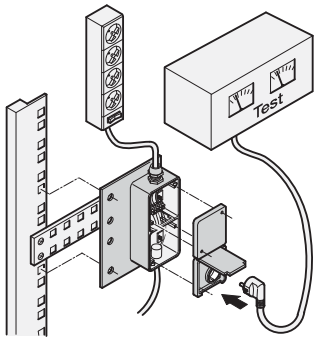

sc107

Delivery comprises

Item	Qty	Description
1	1	Distribution box with SCHUKO socket, plastic, light grey, with terminal strip for cable cross section up to 4 mm^2
2	1	Mounting plate 90 x 100 mm, AlZn, 1.5 mm, for assembly on cabinet uprights, 19" profiles and depth members
3	1	Assembly kit for cabinet assembly

Order Information

Description	Part no.
Distribution box with SCHUKO socket	**20118-280**
Delivery: supplied loose with cabinet or frame	**Part no./35**

Mounting plate for single sockets

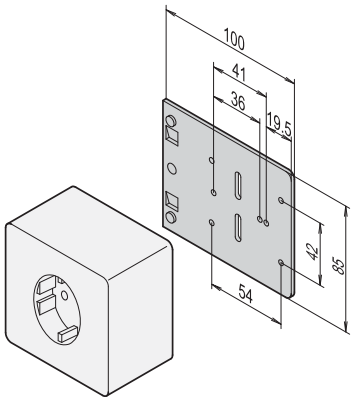

ela44796

- For common surface sockets

Delivery comprises

Item	Qty	Description
1	1	Mounting plate, Al, 2.5 mm, for cabinet assembly
2	1	Assembly kit for cabinet assembly

Order Information

Description	Part no.
Mounting plate for single sockets	**20118-537**
Delivery: supplied loose with cabinet or frame	**Part no./35**

Note

- Surface socket not included in Schroff product range

GND/earthing clamp

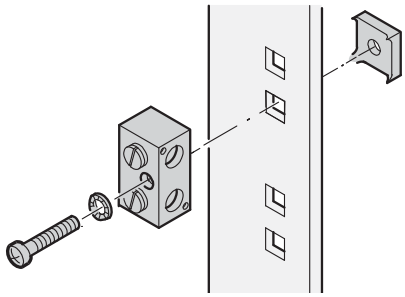

sc27

- IBM-compatible GND/earthing terminal for connecting a cabinet to the building GND/earth
- Maximum cable cross-section 100 mm^2
- Surface tin-plated, in accordance with IBM Ref. No. 4716804

Order Information

Description	Part no.
GND/earthing clamp, incl. assembly kit	**20118-030**
Delivery: supplied loose with cabinet or frame	**Part no./35**

GND/earthing rail

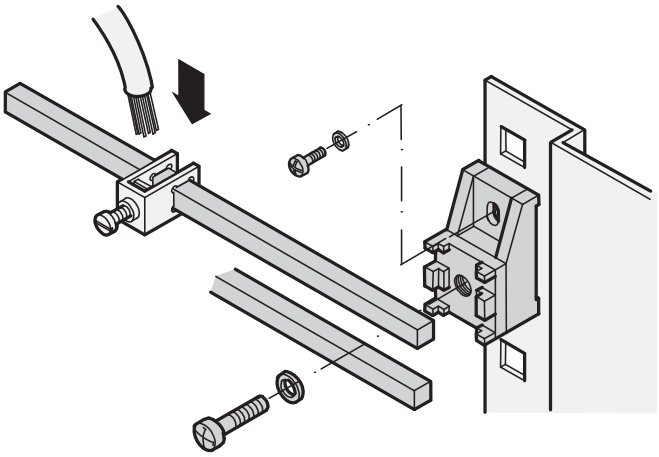

- To connect GND/earthing wire and stranded conductors by means of terminal clamps
- Fixing insulated from the frame

Delivery comprises

Item	Qty	Description
1	1	Rail, Cu, cross section 35 mm^2
2	2	Rail support block for max. 2 rails, plastic
3	1	Assembly kit for cabinet assembly

Order Information

Length mm	Part no.
200	**20118-281**
480	**20118-282**
1000	**20118-265**
1910	**20118-266**
Accessories	
Additional second GND/earthing rail, length 200 mm, 1 piece	**60118-145**
Additional second GND/earthing rail, length 480 mm, 1 piece	**60118-144**
Terminal clamps for GND/earthing rail, cable cross section 4 mm^2,PU 20 pieces	**20118-366**
Terminal clamps for GND/earthing rail, cable cross section 16 mm^2,PU 10 pieces	**20118-365**
Terminal clamps for GND/earthing rail, cable cross section 35 mm^2,PU 5 pieces	**20118-364**
Delivery: supplied loose with cabinet or frame	**Part no./35**

Note

- Please order terminal clamps or second rail separately

GND/earthing rail, flat strip

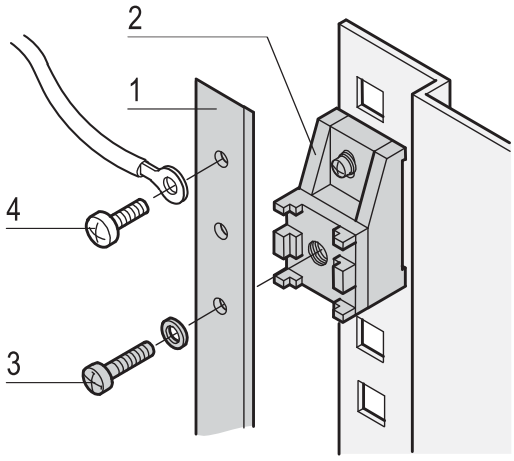

- To screw on GND/earthing cables with ring tags
- Threaded fixing points M5 in intervals of 20 mm
- Fixing insulated from the frame

Delivery comprises

Item	Qty	Description
1	1	Rail, brass, untreated, 1000 x 15 x 3 mm, fixing points M5 in intervals of 20 mm
2	2	Rail support block, plastic
3	1	Assembly kit for cabinet assembly

Order Information

Description	Qty/PU	Part no.
GND/earthing rail, flat strip	1	**20118-590**
GND/earthing rail, flat strip	10	**20118-591**
Accessories		
Item 4 Panhead screw M5 x 10, St, zinc-plated, PU 100 pieces		**21120-150**
Delivery: supplied loose with cabinet or frame		**Part no./35**

Note

- Please order panhead screw M5 to screw on GND/earth cable separately

Cabinet Accessories – Electrics

Mains cables

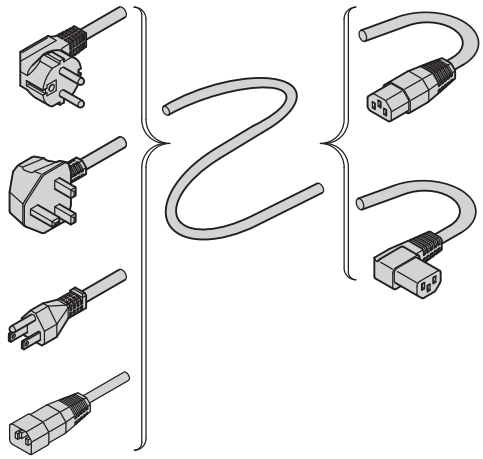

AZA43067

- Applications:
  - Fans, cabinet lights, etc.
  - Industrial PC connections
  - Uninterruptible power supplies
  - Systems

Delivery comprises

Item	Qty	Description
1	1	Mains cable, PVC, max. 250 V_{AC}, max. 10 A

Order Information

Plug, mains/line side	Socket IEC 60320 C13, equipment side	Length mm	Colour	For application in	Approvals/ certifications	Part no.
SCHUKO/UTE						
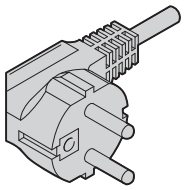 AZA43068	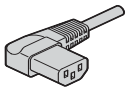 aza43071	2500	black	Germany, France, Austria, Norway, The Netherlands, Sweden, Finland, Spain, Portugal, Turkey, Greece, Belgium, Luxemburg	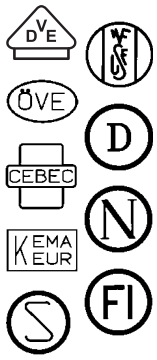	**62150-191**
		2500	grey (to DIN 47732)			**60103-131**
	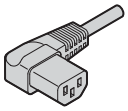 aza43072	2500	grey (to DIN 47732)			**60704-020**
BS						
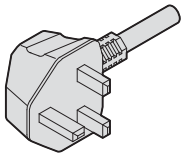 AZA43069	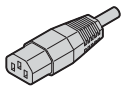 aza43071	2500	black	Great Britain, Ireland		**60103-137**
USA						
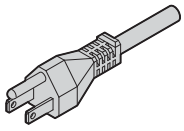 AZA43070	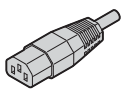 AZA43071	2000	black	USA, Canada		**60103-141**
IEC 60320 C14						
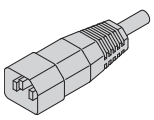 00503051	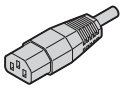 AZA43071	500	black	worldwide	IEC 60320	**60110-360**
		1000				**60110-361**
		2500				**60197-053**

Delivery: supplied loose with cabinet or frame — **Part no./35**

Busbar 3 and 4 pole

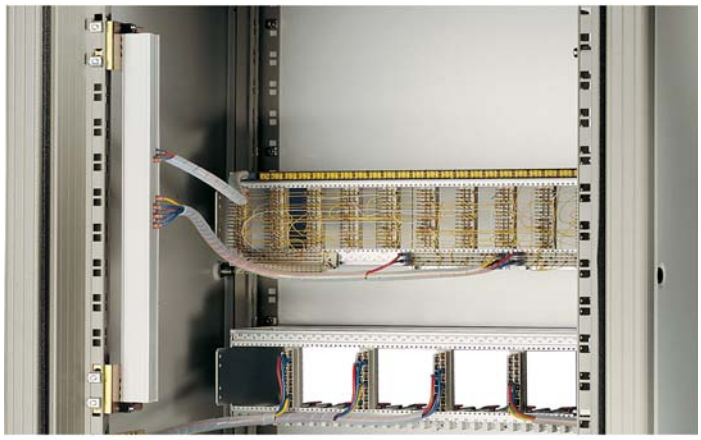

00892013

00892015

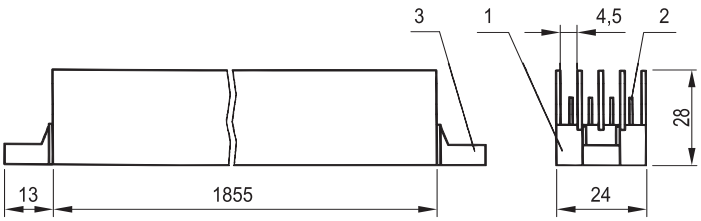

AZA42396

Fixing with insulating block for busbar 3, 4 pole

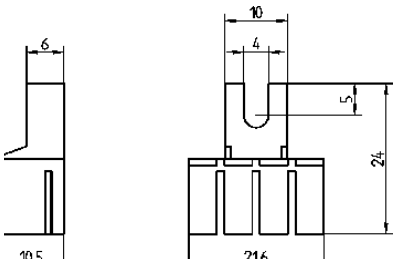

AZA42393

Mounting angle for cabinet assembly

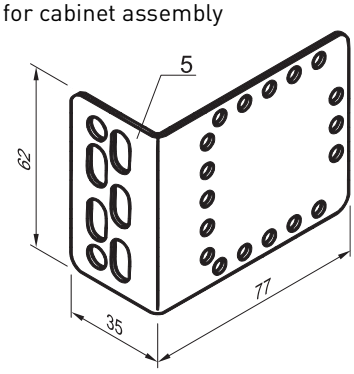

aza40567

- Vertical current distribution in cabinets
- Can be sawn off to required length
- Connections: FASTON connector 6.3 x 0.8 mm

Delivery comprises (assembled)

Item	Qty	Description
1	1	Insulating body for 4 inner conductors, length 1855 mm, PVC
2	3 (4)	Inner conductor, pushed in
3	2	Fixing with insulating block, pushed in, PA 6, black,

Order Information

Description	Material	Length mm	Part no.
3 pole	E-Cu tin-plated	1855	**20100-018**
4 pole	E-Cu tin-plated	1855	**20100-017**
4 pole	Brass untreated	1855	**20100-015**
Accessories			
Item 3 Fixing with insulating block PVC, black, PU 10 pieces with assembly kit			**20100-019**
Item 5 Mounting angle for cabinet assembly St, 1.5 mm, finish AlZn, PU 4 pieces			**20100-029**

Technical data

Mains voltage	500 V_{AC} (50 Hz)
Nominal current CuZn conductor	32 A (T_U = 40 °C)
Nominal current Cu conductor	63 A (T_U = 40 °C)
Conductor resistance	6.8 mΩ/m (brass), 1.9 mΩ/m (Cu)
Max. temperature of rail	70 °C
Flammability of insulation body	UL 94-V0

Note

- After cutting to length, please order fixings with insulating block separately

Cabinet Accessories – Electrics

Busbar 1 and 2 pole

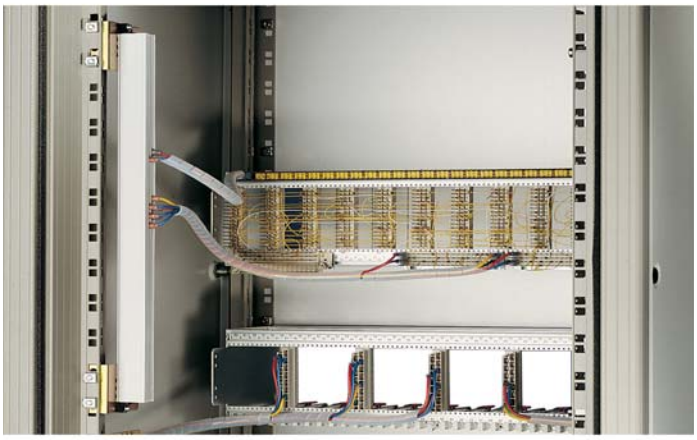

00892013

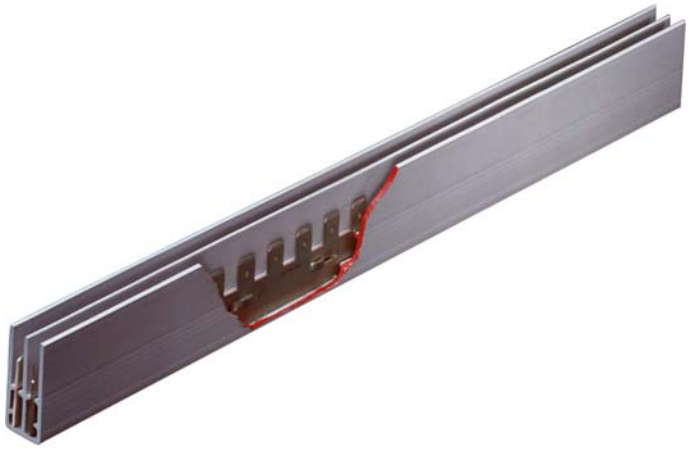

00892014

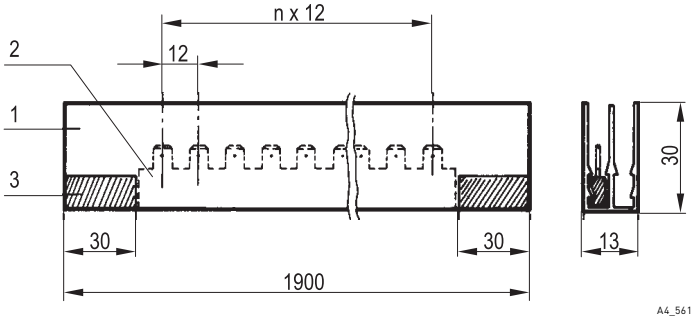

A4_561

- Vertical current distribution in cabinet
- Can be sawn off to required length
- Connections FASTON 6.3 x 0.8 mm

Delivery comprises (assembled)

Item	Qty	Description
1	1	Insulating body for 2 inner conductors, length 1900 mm, PVC
2	1 (2)	Inner conductor, pushed in
3	2	Insulating block, glued in, PA 6, grey

Order Information

Description	Material	Length mm	Part no.
1 pole	E-Cu tin-plated	1900	**20100-010**
2 pole	E-Cu tin-plated	1900	**20100-008**
2 pole	Brass untreated	1900	**20100-006**
2 pole	Brass tin-plated	1900	**20100-007**

Technical data

Mains voltage	500 V_{AC} (50 Hz)
Isolation voltage	750 V
Nominal current CuZn conductor	50 A (T_U=20°C), 32 A (T_U=50°C)
Cu conductor	100 A (T_U=20°C), 60 A (T_U=50°C)
Breakdown voltage/test voltage	2500 V/2 kV/1 min
Conductor cross-section	18 mm²
Conductor resistance	4 mΩ/m (brass), 1 mΩ/m (Cu)
Max. temperature of rail	70 °C
Flammability of insulation body	UL 94 V-0

- For mounting please order insulating block or mounting angle separately, see page 3.42

Mounting bracket for busbar 1, 2 pole

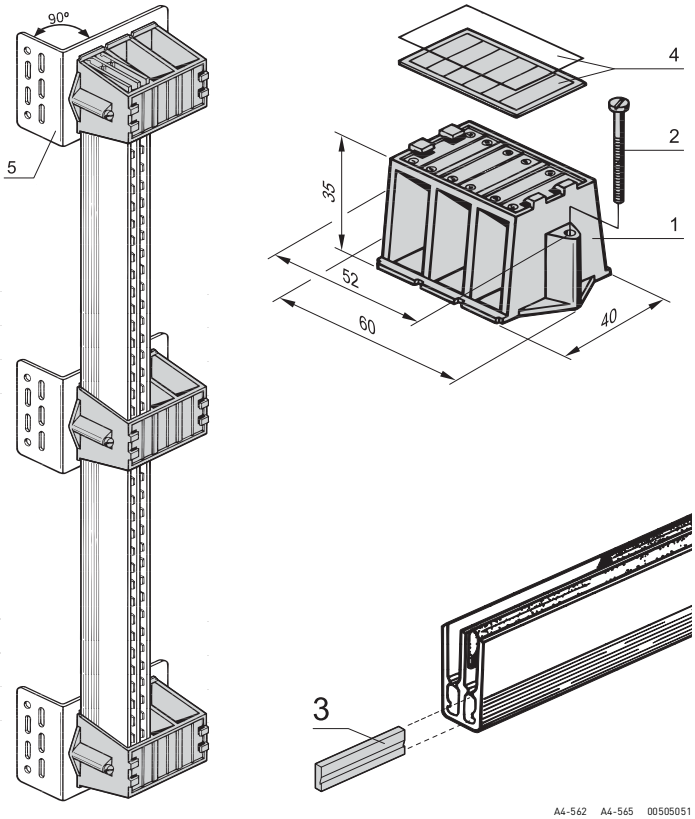

- Mounting of 1 to 3 busbars in full length (max. 6 conductors)
- After cutting to length, glue in new insulating blocks
- Numbers 1...12 are stamped on for conductor identification

Delivery comprises

Item	Qty	Description
1	4	Mounting bracket, plastic, Noryl, black
2	8	Screw with cross recess, St, M4 x 30, zinc-plated

Order Information

Description	Part no.
Mounting bracket for bus bar 1, 2-pole	20100-028
Accessories	
Item 3 Insulating block for shortened busbar, 1 or 2-pole	20100-009
Item 4 Identification label with transparent cover, PU per 10 pieces	20100-013
Item 5 Mounting angle for cabinet assembly St, 1.5 mm, finish AlZn, PU 4 pieces	20100-029

Note

- To ensure stability, mounting brackets should be fitted at 500 mm intervals

Mounting with insulating block for busbar 1, 2 pole

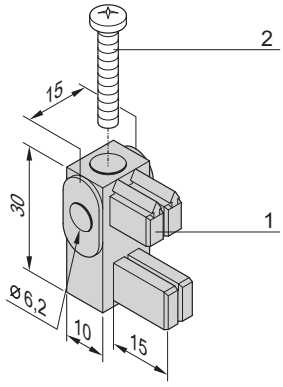

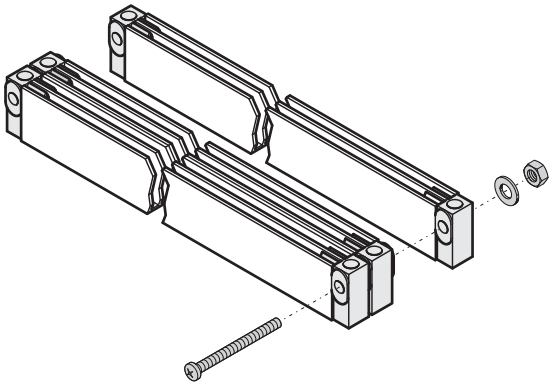

- Easy and space saving assembly of shortened busbars
- With integrated insulating block
- Mounting in rows possible

Delivery comprises

Item	Qty	Description
1	4	Fixing with insulating block, Noryl, black
2	4	Screw, M4 x 25, St, zinc-plated

Order Information

Description	Part no.
Fixing with insulating block for busbar 1 or 2 pole	20100-030
Mounting angle for cabinet assembly St, 1.5 mm, finish AlZn, PU 4 pieces	20100-029

Note

- M6 screw, washer and nut for row mounting not included

Cabinet Accessories – Electrics

Contact protection for bus bar 1 ... 4 pole

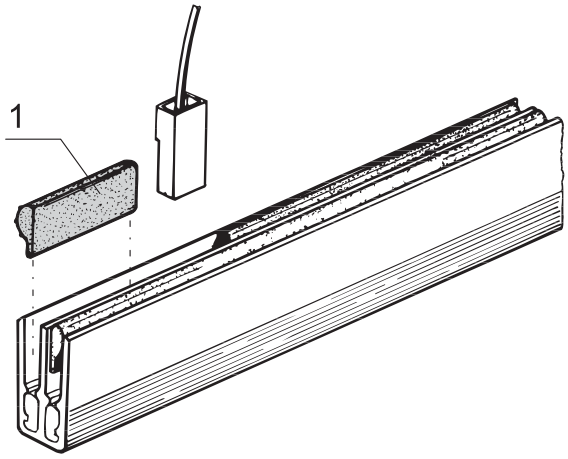

A4-566

- Cover for the inner conductor (between the connectors)
- Can be shortened at any size

Delivery comprises

Item	Qty	Description
1	1	Protection against contact for busbar, length 1 m

Order Information

Description	Length m	Part no.
Protection against contact for busbar	1	**60100-398**

Insulating block for busbar 1 ... 4 pole

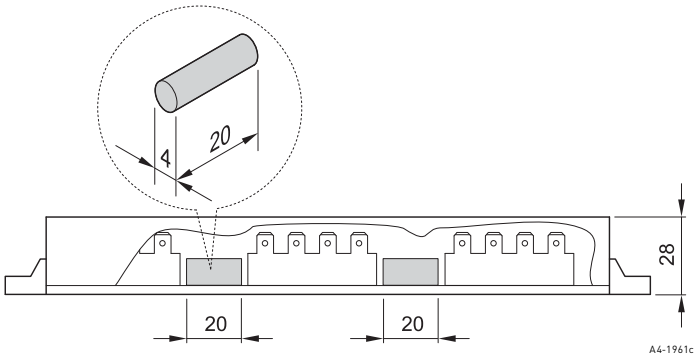

A4-1961c

- The insulating block breaks multiple circuits within one rail

Delivery comprises

Item	Qty	Description
1	10	Insulating block, PVC Ø 4 x 20 mm

Order Information

Description	Part no.
Insulating block for busbar 1 ... 4 pole	**20100-021**

Power connector 63 A for busbar 1 ... 4 pole

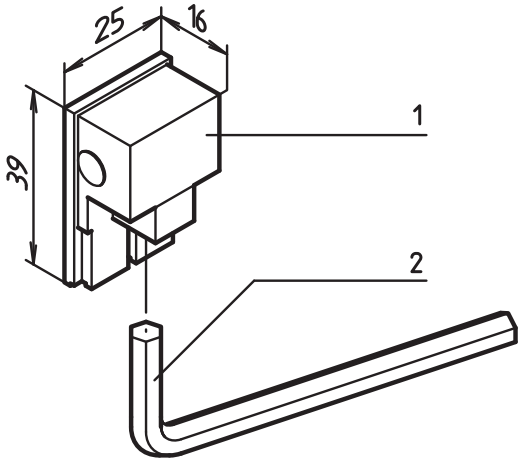

ela44252

- Nominal current max. 63 A at 40 °C
- Cable cross section max. 16 mm²
- Power supply protected against direct contact

Delivery comprises

Item	Qty	Description
1	1	Power connector, ABS/E-Cu, tin-plated, ABS, self-extinguishing
2	1	Allen key, St, zinc-plated

Order Information

Description	Part no.
Power connector 63 A for busbar 1 ... 4 pole	**60100-478**

Note

- Power connector requires two FASTON slots

Power connector 125 A for busbar 1 ... 4 pole

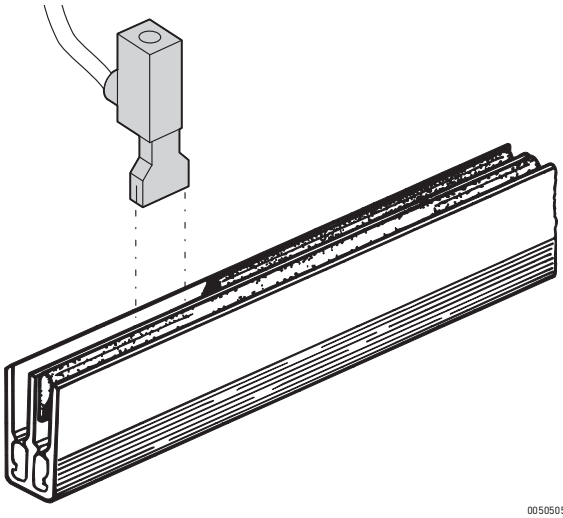

00505052

- Nominal current max. 125 A at 40°C
- Cable cross section max. 25 mm²
- Power supply protected against direct contact

Delivery comprises

Item	Qty	Description
1	1	Power connector, PA, halogen-free, copper plate, connected

Order Information

Description	Part no.
Power connector 125 A for busbar 1 ... 4 pole	**60100-575**

Note

- Power connector requires three FASTON slots

Cabinet Accessories – Monitor, keyboard

Monitor, keyboard, touchpad, 1 U

Front view

Detail of keyboard, touchpad

Rear view

- Pull-out 17" TFT colour monitor chassis, 1 U (resolution 1280 x 1024, SXGA; connects to VGA interface)
- Keyboard with German, English or French keyboard layout (connects via PS2 or USB)
- Integral touchpad (connects via PS2 or USB)
- Voltage supply:
  Wide-range input (nominal mains voltage 110 to 240 V_{AC}),
  Voltage supply 12, 24 and 48 V_{DC} on request
- Depth-adjustable mounting for different pitches of server panel/slide mounts;
  Mounting depth (dimension c = spacing of 19" profiles):
  560 ... 800 mm (smaller mounting depths on request)
- Further versions on request
  - With trackball or numeric pad
  - Keyboard layouts for Arabic, Belgian, Danish, US English, Finnish, Italian, Portuguese, Russian, Swedish, Swiss, Spanish and Czech
  - With DVI connection

CE

Delivery comprises (assembled and wired)

Item	Qty	Description
1	1	1 U chassis, pull-out, RAL 9005 black; 17" monitor, keyboard and touchpad; Monitor connection via VGA (SUB-D 15), keyboard and touchpad via either PS/2 or USB
2	1	Mains supply cable, length 2 m, SCHUKO/UTE plug ... IEC 60320-C13 socket
3	1	Connecting cable for mouse PS/2 - PS2, length 2 m
4	1	Connecting cable for keyboard PS/2 - PS2, length 2 m
5	2	Connecting cable for keyboard and mouse USB - USB, length 2 m
6	1	Connecting cable for monitor SUB-D 15, length 2 m
7	1	Assembly kit and user manual

Technical data

Mains voltage	110 ... 240 V_{AC} (50 Hz ... 60 Hz)
Power consumption	Active max 30 W, standby < 1 W
Monitor	17", TFT display, resolution 1280 x 1024 (SXGA), 16.7 million colours, contrast 1000:1, brightness 350 cd/cm², viewing angle 160°, Operating life LED backlight 30000 h, on-screen menu; cConnection by 15-pin H-DSUB socket
Keyboard	83 keys (numeric pad integrated), connects to computer via PS/2 or USB
Touchpad	Industry standard, width 62 mm, height 46 mm, connects to computer via PS/2 or USB
Dimensions (with closed monitor)	Height 1 U (44 mm), width 19" (483 mm), depth without handle 495 mm, depth with handle 535 mm
Dimensions (with open monitor, fully extracted)	Height 380 mm, width 483 mm, depth min. 1000 mm (depending on mounting depth)
Extraction depth	500 mm
Operating / storage temperature	0 ... 50 °C / -20 ... 60 °C
Operating / storage humidity	5 ... 90 % / 5 ... 90 %
Shock	non operating 50 *g* / 11 ms
Vibration	non operating 1.5 *g* / 10-300 Hz
Weight	13 kg
MTBF	35000 h

Order Information

Description	Qty/PU pieces	Part no.
German keyboard layout	1	60118-518
English keyboard layout	1	60118-519
French keyboard layout	1	60118-520
Accessories		
Equipment cable, BS British Standard plug, IEC 60320 C13 socket, 2.5 m, 1 piece		**60103-137**
Delivery: fitted in cabinet or on frame		**Part no./05**
Delivery: supplied loose with cabinet or frame		**Part no./35**

Note

- Adaption to other mains connections see page 3.39

19" drawer with keyboard (touchpad)

00510008

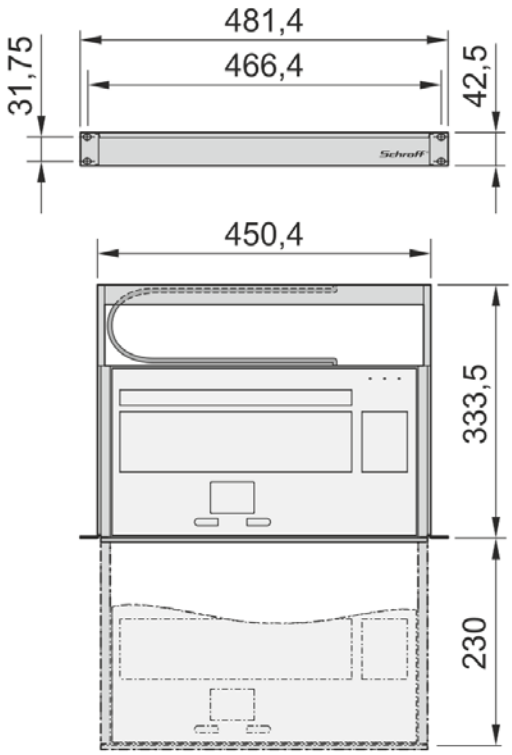

00510050

Drawer: Front view, keyboard closed/pulled out

00507002

Adaptor, 2 x PS/2 – USB

- Pull-out 1 U drawer with industrial keyboard including function keys, numeric keypad and touchpad; end stop when fully pulled out
- Connects to PS/2 or USB interface with adaptor (please order separately)
- Colour light grey (RAL 8035) or black grey (RAL 7021)

Delivery includes (assembled and wired)

Item	Qty	Description
1	1	19" drawer with front panel 1 U; keyboard with PS/2 plug, cable length 1.5 m, touchpad 62 x 46 mm

Order Information

Height U	Width mm	Depth mm	Description	RAL 7035 Part no.	RAL 7021 Part no.
1	482	334	German keyboard layout	**60118-522**	**60118-526**
1	482	334	French keyboard layout	**60118-524**	**60118-528**
1	482	334	UK keyboard layout	**60118-525**	**60118-529**
1	482	334	USA keyboard layout	**60118-523**	**60118-527**
Accessories					
Adaptor, 2 x PS/2 – USB PS/2 socket – USB plug, length 160 mm, 1 piece					**60118-515**

Note

- Please order adaptor, 2 x PS/2 sockets to connect to USB port of computer separately
- 19" assembly kit, see page 3.17

Cabinet Accessories – Management

Cabinet management basic units

00711020

EMX 111

00711023

EMX 888

00711021

Rear view EMX 888

- Monitoring and management of air/water heat exchanger, environmental parameters and access
- Local display, Ethernet interface and web interface
- 2 versions
  - EMX 111 Monitoring for one air/water heat exchanger and up to max. 16 sensor values
  - EMX 888 (19" case): Monitoring for up to 8 air/water heat exchangers and up to max. 128 sensor values

Delivery comprises

Item	Qty	Description
1	1	Cabinet management basic unit; integrated power supply unit, 230 V_{AC}, IEC C13 socket
2	1	Mains cable IEC C13 on SCHUKO/UTE, cable restrainer with clip
3	2	Mounting bracket
4	1	Serial interface cable with DB9F connection, black
13	1	User manual

Order Information

Height H		Width W		Depth D	Part no.
mm	U	mm		mm	
44	–	251	–	53	EMX111
44	1	440	19"	134	EMX888

Interfaces

EMX111	EMX888	Description
1	8	RJ 12 socket, connection point for environmental sensors
1	8	RJ 45 socket (RS 485; connecting point for air/water heat exchanger)
1	8	RJ 45 socket, connection for asset management strips
1	1	RJ 45 socket, connection point for network (Ethernet)
1	1	USB socket, host
1	1	USB socket, device
-	2	Potential-free contacts
1	1	RS 232 socket, serial interface

Note

- Sensors (temperature, humidity, differential pressure, airflow...) and hub for connecting multiple sensors, see from page 3.48

Sensors

- The sensors are connected to the base unit via a RJ12 interface
- The sensors connected are detected automatically

Order Information

	Description	Measurements	Input Connection	Qty/PU pieces	Part no.
00709002	Temperature sensor	1 x temperature	Cable length 3 m	1	60110-313
00709002	Temperature/ humidity combi sensor	1 x temperature 1 x humidity	Cable length 3 m	1	60110-314
00709003	Two temperature/ humidity combi sensors	2 x temperature 2 x humidity	Cable length 3 m + 3 m	1	60110-315
00711022	Two temperature sensors and one temperature/ humidity combi sensor	3 x temperature 1 x humidity	Cable length 3 m + 3 m + 3 m	1	DPX-T3H1
00711018	Dual potential-free contact sensor	–	Cable length 0.5 m	1	DPX-CC2-TR
00711019	Differential pressure and temperature sensor	1 x pressure 1 x temperature	Cable length 3 m	1	DPX-T1DP1
00712002	Airflow sensor	1 x air circulation	Cable length 3 m	1	DPX-AF1

Note

- Other sensors e.g. smoke detector, vibrations, leakage, etc. on request

Cabinet Accessories – Management

Hub to accept 4 sensors

00709011

- Connections (signals and power) are via RJ12 plug on the power control socket strip or on the cabinet management system
- A maximum of 4 sensors can be connected, thus up to 16 variables (depending on sensors) can be transmitted (temperature sensor, temperature/humidity combi sensor, differential pressure, potential-free contacts, airflow sensor)

Delivery comprises

Item	Qty	Description
1	1	Case, height 18 mm, width 106 mm, depth 37 mm
2	1	RJ12 socket to connect to socket strip or cabinet management system (IN; for power supply and data transmission)
3	4	RJ12 socket for connecting sensors (OUT)
4	1	Connecting cable, RJ12 plug – RJ12 plug, length 1 m
5	2	Mounting angle, St, 2 mm, RAL 7035

Order Information

Description	Part no.
Hub to accept 4 sensors (max. 16 parameters)	60110-316

Content

Cabinets 1

Wall mounted cases 2

Accessories for cabinets and wall mounted cases . 3

Climate control . 4

Electronics cases 5

Subracks/ 19" chassis 6

Front panels, plug-in units . . . 7

Systems 8

Power supply units 9

Backplanes . . . 10

Connectors, front panel component system 11

Appendix 12

Cabinet Accessories – Socket strips

00704002

00704003

Single-phase and three-phase strips

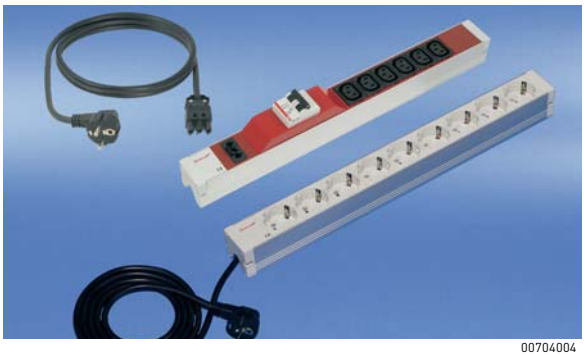

00704004

Strips with fixed connecting cables or with Wieland® GST 18 connecting system

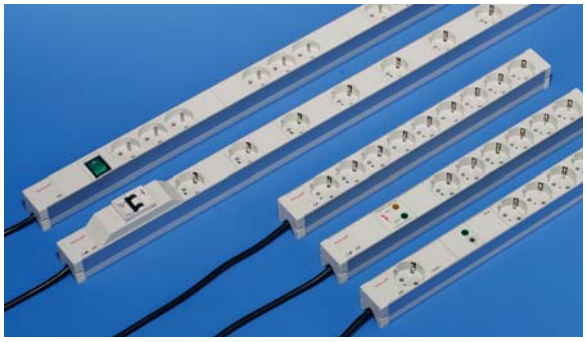

00704005

Broad range of functional elements up to master-slave

00708047

19" power distribution for 3 phases, 2 performance classes

Overview 3.50

Socket strips with connecting cable

SCHUKO

SCHUKO socket strips 3.52

SCHUKO socket strips, master-slave 3.53

SCHUKO socket strips, 3 circuits 3.54

UTE

UTE socket strips 3.55

UTE socket strips, master-slave 3.56

UTE socket strips, 3 circuits 3.57

IEC

IEC socket strips, C13 ..... 3.58

IEC socket strips, C19 ..... 3.59

IEC socket strips, C19, 3 phase 3.60

SCHUKO/ IEC

Socket strips with with 2 supply cables 3.61

BS

BS socket strips 3.62

US

USA socket strips 3.63

Switzerland

Socket strips Swiss version 3.64

Socket strips, Wieland®

SCHUKO socket strips, Wieland® 3.67

UTE socket strips, Wieland® 3.68

IEC socket strips, Wieland® 3.69

Connector cable for Wieland® 3.70

19" power distributor

3-phase 3.71

ServicePLUS ... 3.71

Power Control socket strips ... 3.72

Socket strips

- Modular, compact construction with many function elements
- Mains input via cable and country-specific plug or via Wieland® GST18 system
- Horizontal mounting on the 19" plane (1 U) or vertically on the cabinet frame
- Multiphase supply via three-phase strips or IEC power distributor

Socket strips in 1 U Al extrusion

- Hard wired connecting cable with country-specific mains plug or Wieland® GST18
- Country-specific sockets: IEC, SCHUKO, UTE, British Standard, USA or Swiss versions
- Functional elements: Fault current, overcurrent and transient protection, interference suppression filter with display
- Single-phase and three-phase feed

00704005 00708032

00708033

19" power distributor, 3-phase

- 3-phase distributor to connect single phase consumers or socket strips
- Input 3-phase 400 V_{AC} (32 A or 63 A)
- Output with IEC 60320-C19 sockets
  - 6 × 230 VAC in 32 A/phase version
  - 9 × 230 VAC in 63 A/phase version
- Overcurrent protection for each output

30407004

ServicePLUS from page 3.71

e.g. individual configuration of design, sockets, power connection, functional elements (filter, overcurrent and overvoltage protection, etc.)

www.schroff.biz/ServicePLUS

SCHUKO socket strip

00705001 DTA44115

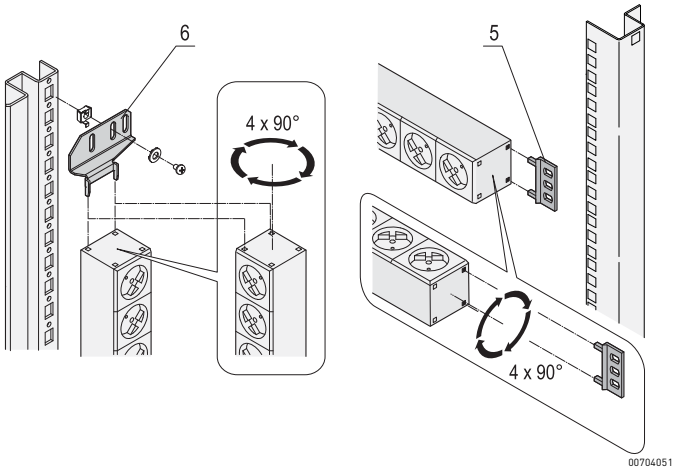

00704051

Item 6: bracket for vertical mounting

ServicePLUS see page 3.71

- Socket strips with SCHUKO sockets, with either switch or function elements
- Installation height 1 U
- Connecting cable 2 m with SCHUKO/UTE plug
- Socket strips can be rotated through all four directions (in 90° increments) during installation
- Horizontal or vertical mounting
- 230 V, 16 A
- In accordance with DIN 57620, VDE 0620

Delivery comprises (assembled)

Item	Qty	Description
1	1	Al extrusion, 1 U, anodised, for sockets and functional elements
2		SCHUKO sockets (35° rotated, PA, RAL 7035), illuminated switch and functional elements, for type and quantity see Order information
3	2	End piece, PA, RAL 7035
4	1	Connecting cable, black, 2 m, 05VV-F 3G 1.5 mm^2, with SCHUKO/UTE connector, PVC, encapsulated
5	2	Mounting bracket, PA, RAL 7035 (only with 10", 19" version)

Order Information

Description	Sockets	Length Inch	Length mm	Depth mm	Switch	Functional element	Part no.
SCHUKO	3	–	184	44	–	–	**60110-200**
	4	10"	210	44	–	–	**60110-201**
	9	19"	438.5	44	–	–	**60110-202**
	12	–	947.5	44	–	–	**60110-203**
	15	–	1202	44	–	–	**60110-204**
	19	–	1753	44	–	–	**60110-205**
SCHUKO - with switch	8	19"	438.5	44	X	–	**60110-206**
	12	–	947.5	44	X	–	**60110-207**
	15	–	1202	44	X	–	**60110-208**
	19	–	1753	44	X	–	**60110-209**
SCHUKO with functional elements	6	19"	438.5	88	–	Fault current protection	**60110-216**
	6	19"	438.5	75	–	Overcurrent protection	**60110-212**
	6	19"	438.5	88	–	Fault current protection, overcurrent protection	**60110-217**
	7	19"	438.5	44	–	Mains suppression filter	**60110-214**
	8	19"	438.5	44	–	Transient protection	**60110-210**
	6	19"	438.5	44	–	Transient protection, mains suppression filter	**60110-266**
	9	–	947.5	44	–	Transient protection	**60110-211**
Delivery: fitted in cabinet or on frame							**Part no./05**
Delivery: supplied loose with cabinet or frame							**Part no./35**
Accessories							
Item 6 Mounting bracket for one socket strip for vertical mounting, St, 2 mm, PU 2 pieces							**20110-068**
Mounting plate for mounting of two socket strips side by side for vertical mounting, St, 2 mm, height 70 mm, depth 135 mm, PU 2 pieces							23130-010

Note

- Please order mounting bracket for vertical mounting separately
- Individual online configuration www.schroff.biz/conf

Cabinet Accessories – Socket strips

SCHUKO socket strip, Master-Slave

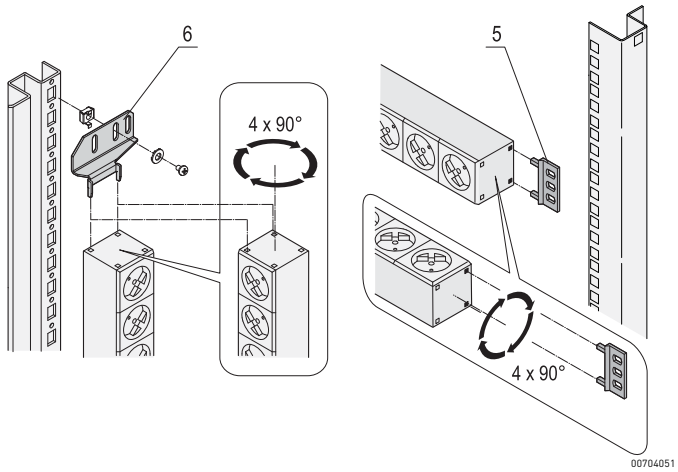

Item 6: bracket for vertical mounting

ServicePLUS see page 3.71

- When the master unit is switched on the slave outlets are connected to the mains (switch threshold adjustable)
- Mounting height 1 U
- Connecting cable 2 m with SCHUKO/UTE plug
- Socket strips can be rotated through all four directions (in 90° increments) during installation
- Horizontal or vertical mounting
- 110 ... 230 V, 16 A
- In accordance with DIN 57620

CE

Delivery comprises (assembled)

Item	Qty	Description
1	1	Al extrusion, 1 U, anodised, for sockets
2	6	SCHUKO sockets (35° rotated, PA, RAL 7035)
3	2	End piece, PA, RAL 7035
4	1	Connecting cable, black, 2 m, 05VV-F 3G 1.5 mm^2, with SCHUKO/UTE connector, PVC, encapsulated
5	2	Mounting bracket, PA, RAL 7035

Order Information

Sockets	Length Inch	Length mm	Depth mm	Part no.
6	19"	438.5	44	**60110-270**
Delivery: fitted in cabinet or on frame				**Part no./05**
Delivery: supplied loose with cabinet or frame				**Part no./35**
Accessories				
Item 6 Mounting bracket for one socket strip for vertical mounting, St, 2 mm, PU 2 pieces				**20110-068**
Mounting plate for mounting of two socket strips side by side for vertical mounting, St, 2 mm, height 70 mm, depth 135 mm, PU 2 pieces				23130-010

Note

- Please order mounting bracket for vertical mounting separately
- Individual online configuration www.schroff.biz/conf

SCHUKO socket strip, 3-phase

00704008

DTA44115

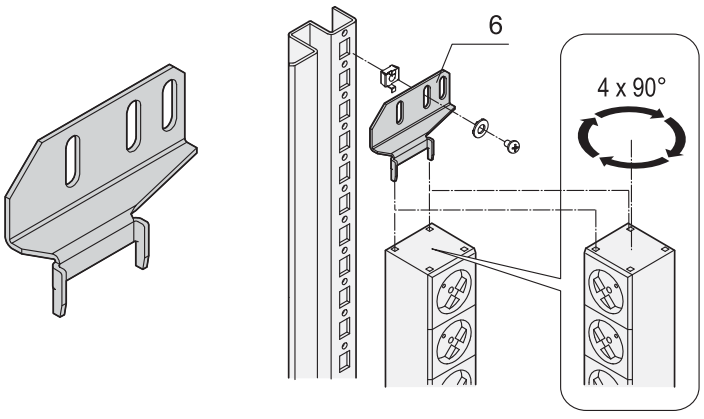

00502502

Item 6: bracket for vertical mounting

ServicePLUS see page 3.71

- Socket strips with SCHUKO sockets, 3-phase
- Installation height 1 U
- Connecting cable 2 m, open end with ferrules
- Socket strips can be rotated through all four directions (in 90° increments) during installation
- Vertical mounting
- 3 phases, 16 A per phase
- In accordance with DIN 57620

CE

Delivery comprises (assembled)

Item	Qty	Description
1	1	Al extrusion, 1 U, anodised, for sockets
2	9	SCHUKO sockets (35° rotated, PA, RAL 7035), 3 phases x 3 sockets, different colours
3	2	End piece, PA, RAL 7035
4	1	Connecting cable, black, 2 m, 05VV-F 5G 2.5 mm^2, open end with ferrules

Order Information

Sockets	Height U	Length mm	Depth mm	Part no.
9	1	608.5	44	**60110-219**
Delivery: fitted in cabinet or on frame				**Part no./05**
Delivery: supplied loose with cabinet or frame				**Part no./35**
Accessories				
Item 6 Mounting bracket for one socket strip for vertical mounting, St, 2 mm, PU 2 pieces				**20110-068**
Mounting plate for mounting of two socket strips side by side for vertical mounting, St, 2 mm, height 70 mm, depth 135 mm, PU 2 pieces				23130-010

Note

- Please order mounting bracket for vertical mounting separately
- Individual online configuration www.schroff.biz/conf

Cabinet Accessories – Socket strips

UTE socket strip

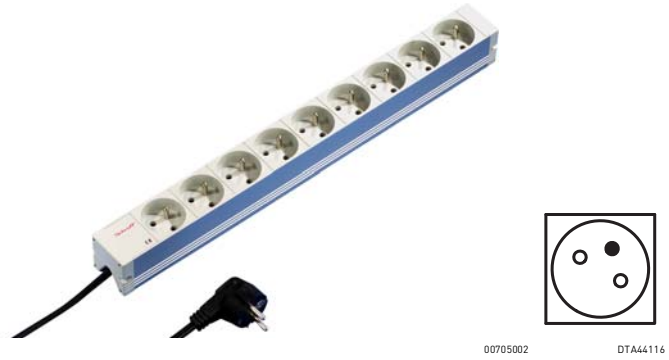

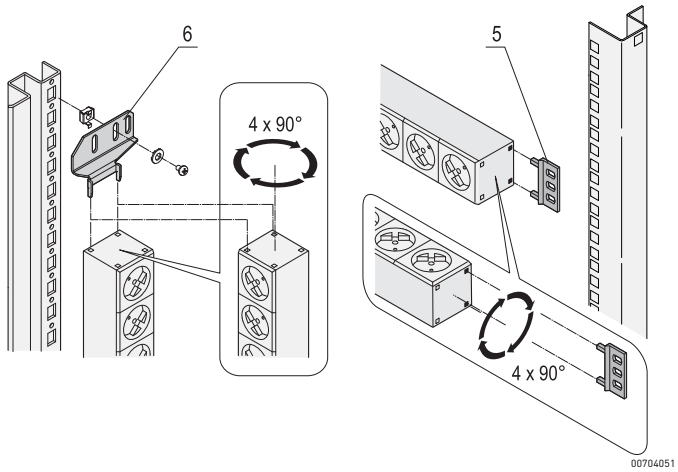

Item 6: bracket for vertical mounting

ServicePLUS see page 3.71

- Socket strip with SCHUKO sockets, either with switch or functional elements
- Mounting height 1 U
- Connecting cable 2 m, with SCHUKO/UTE plug
- Socket strips can be rotated through all four directions (in 90° increments) during installation
- Horizontal and vertical mounting
- 230 V, 16 A
- In accordance with NFC 61-303

CE

Delivery comprises (assembled)

Item	Qty	Description
1	1	Al extrusion, 1 U, anodised, for sockets and functional elements
2		UTE sockets (35° rotated, PA, RAL 7035), illuminated switch and functional elements, for type and quantity see Order information
3	2	End piece, PA, RAL 7035
4	1	Connecting cable, black, 2 m, 05VV-F 3G 1.5 mm^2, with SCHUKO/UTE connector, PVC, encapsulated
5	2	Mounting bracket, PA, RAL 7035 (only with 10", 19" version)

Order Information

Description	Sockets	Length Inch	Length mm	Depth mm	Switch	Functional element	Part no.
Socket strip 10", 4 UTE sockets	4	10"	210	44	–	–	**60110-220**
	9	19"	438.5	44	–	–	**60110-221**
	12	–	947.5	44	–	–	**60110-222**
	15	–	1202	44	–	–	**60110-223**
	19	–	1753	44	–	–	**60110-224**
UTE with switch	8	19"	438.5	44	X	–	**60110-225**
	12	–	947.5	44	X	–	**60110-226**
UTE with functional element	6	19"	438.5	88	–	Fault current protection	**60110-230**
	6	19"	438.5	75	–	Overcurrent protection	**60110-228**
	6	19"	438.5	88	–	Fault current protection, overcurrent protection	**60110-231**
	7	19"	438.5	44	–	Mains suppression filter	**60110-229**
	8	19"	438.5	44	–	Transient protection	**60110-227**
	6	19''	438.5	44	–	Transient protection, mains suppression filter	**60110-267**
Delivery: fitted in cabinet or on frame							**Part no./05**
Delivery: supplied loose with cabinet or frame							**Part no./35**
Accessories							
Item 6 Mounting bracket for one socket strip for vertical mounting, St, 2 mm, PU 2 pieces							**20110-068**
Mounting plate for mounting of two socket strips side by side for vertical mounting, St, 2 mm, height 70 mm, depth 135 mm, PU 2 pieces							23130-010

Note

- Please order mounting bracket for vertical mounting separately
- Individual online configuration www.schroff.biz/conf

UTE socket strip, master-slave

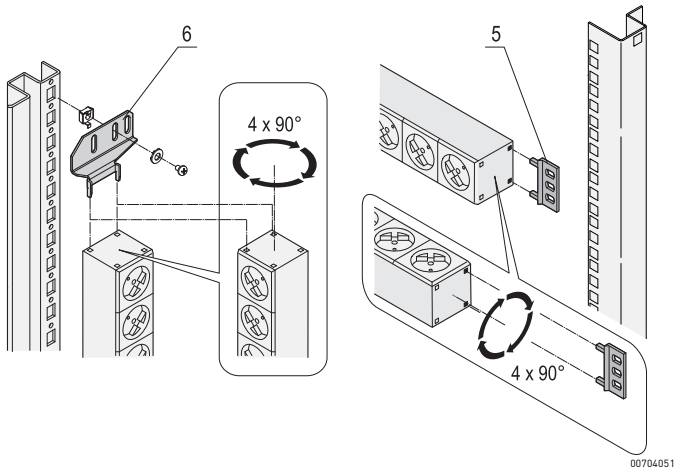

Item 6: bracket for vertical mounting

ServicePLUS see page 3.71

- When the master unit is switched on, the slave outputs are connected to the mains (switch threshold adjustable)
- Mounting height 1 U
- Connecting cable 2 m, with SCHUKO/UTE plug
- Socket strips can be rotated through all four directions (in 90° increments) during installation
- Horizontal and vertical mounting
- 230 V, 16 A
- In accordance with NFC 61-303

CE

Delivery comprises (assembled)

Item	Qty	Description
1	1	Al extrusion, 1 U, anodised, for sockets
2	6	UTE sockets (35° rotated, PA, RAL 7035)
3	2	End piece, PA, RAL 7035
4	1	Connecting cable, black, 2 m, 05VV-F 3G 1.5 mm^2, with SCHUKO/UTE connector, PVC, encapsulated
5	2	Mounting bracket, PA, RAL 7035

Order Information

Sockets	Length Inch	Length mm	Depth mm	Part no.
6	19"	438.5	44	**60110-232**
Delivery: fitted in cabinet or on frame				**Part no./05**
Delivery: supplied loose with cabinet or frame				**Part no./35**
Accessories				
Item 6 Mounting bracket for one socket strip for vertical mounting, St, 2 mm, PU 2 pieces				**20110-068**
Mounting plate for mounting of two socket strips side by side for vertical mounting, St, 2 mm, height 70 mm, depth 135 mm, PU 2 pieces				23130-010

Note

- Please order mounting bracket for vertical mounting separately
- Individual online configuration www.schroff.biz/conf

Cabinet Accessories – Socket strips

UTE socket strip, 3-phase

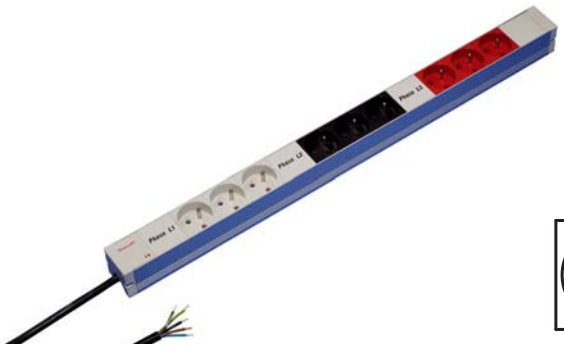

00704010

DTA44116

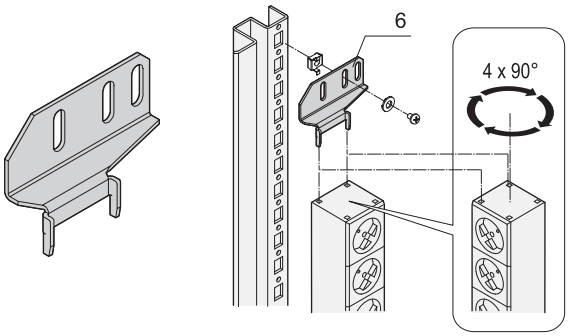

00502502

Item 6: bracket for vertical mounting

ServicePLUS see page 3.71

- Socket strips with UTE sockets, 3-phase
- Installation height 1 U
- Connecting cable 2 m, open end with ferrules
- Socket strips can be rotated through all four directions (in 90° increments) during installation
- Vertical mounting
- 3 phases, 16 A per phase
- In accordance with NFC 61-303

CE

Delivery comprises (assembled)

Item	Qty	Description
1	1	Al extrusion, 1 U, anodised, for sockets
2	9	UTE sockets (35° rotated, PA, RAL 7035), 3 phases x 3 sockets, different colours
3	2	End piece, PA, RAL 7035
4	1	Connecting cable, black, 2 m, 05VV-F 5G 2.5 mm^2, open end with ferrules

Order Information

Sockets	Height U	Length mm	Depth mm	Part no.
9	1	608.5	44	**60110-233**
Delivery: fitted in cabinet or on frame				**Part no./05**
Delivery: supplied loose with cabinet or frame				**Part no./35**
Accessories				
Item 6 Mounting bracket for one socket strip for vertical mounting, St, 2 mm, PU 2 pieces				**20110-068**
Mounting plate for mounting of two socket strips side by side for vertical mounting, St, 2 mm, height 70 mm, depth 135 mm, PU 2 pieces				23130-010

Note

- Please order mounting bracket for vertical mounting separately
- Individual online configuration **www.schroff.biz/conf**

IEC socket strip, C13

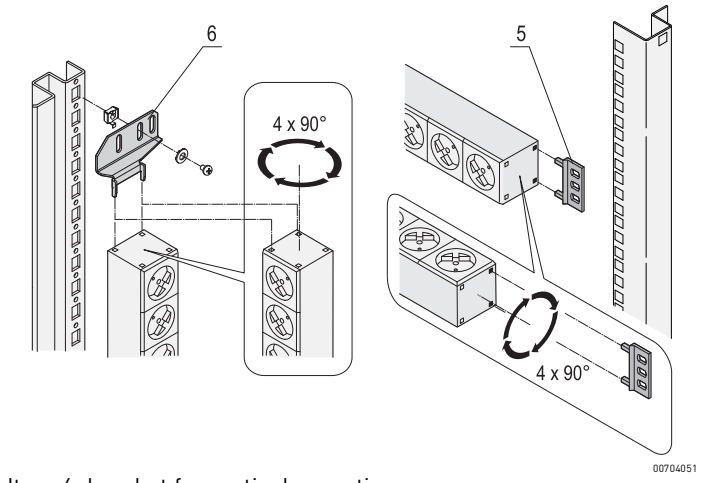

Item 6: bracket for vertical mounting

Strain relief provided by locking tabs

ServicePLUS see page 3.71

- Socket strips with IEC 60320-C13 sockets
- Mounting height 1 U
- Connecting cable 2 m, open end with ferrules
- Socket strips can be rotated through all four directions (in 90° increments) during installation
- Horizontal and vertical mounting
- 230 V, 10 A
- In accordance with IEC 60320

CE

Delivery comprises (assembled)

Item	Qty	Description
1	1	Al extrusion, 1 U, anodised, to accommodate the sockets and function elements
2		IEC 60320-C13 sockets (PA, RAL 7035), quantity see Order information
3	2	End piece, PA, RAL 7035
4	1	Connecting cable, 2 m, black, open end with ferrules, H05VV-F 3G 1.5 mm^2
5	2	Mounting bracket, PA, RAL 7035, (on 19" versions only)

Order Information

Sockets	Length Inch	Length mm	Depth mm	Part no.
8	19"	438.5	44	**60110-290**
12	19"	438.5	44	**60110-291**
16	–	608.5	44	**60110-292**
Delivery: fitted in cabinet or on frame				**Part no./05**
Delivery: supplied loose with cabinet or frame				**Part no./35**
Accessories				
Locking tab for IEC 60320-C13 connector PU 12 pieces				**60110-362**
Item 6 Mounting bracket for socket strips for vertical mounting, St, 2 mm, PU 2 pieces				**20110-068**
Mounting plate for mounting of two socket strips side by side for vertical mounting, St, 2 mm, height 70 mm, depth 135 mm, PU 2 pieces				23130-010
Mains cable, IEC : for locking tab IEC 60320-C14 plug, IEC 60320 C13 socket, 0.5 m, 1 piece				**60110-360**
Mains cable, IEC : for locking tab IEC 60320-C14 plug, IEC 60320 C13 socket, 1 m, 1 piece				**60110-361**

Note

- Please order bracket for vertical mounting separately
- IEC socket strips, telemonitored and remote-controlled see page 3.75
- IEC socket strips with universal connections (Wieland® connectors) see page 3.67
- Individual online configuration www.schroff.biz/conf

Cabinet Accessories – Socket strips

IEC socket strip, C19

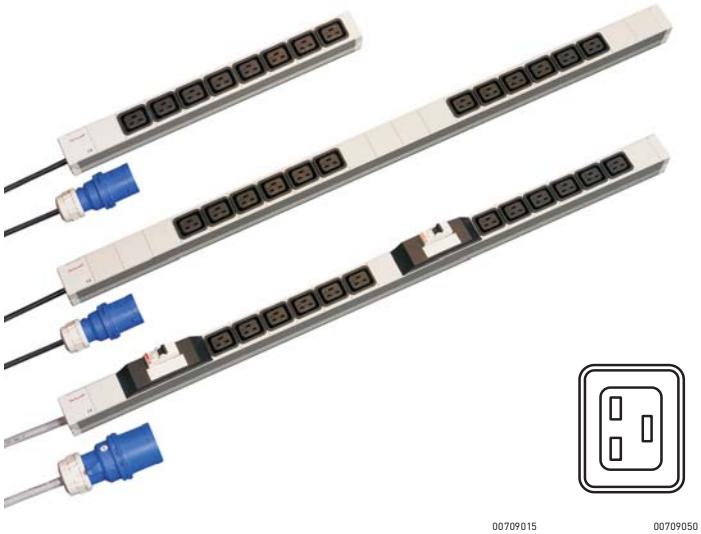

00709015 00709050

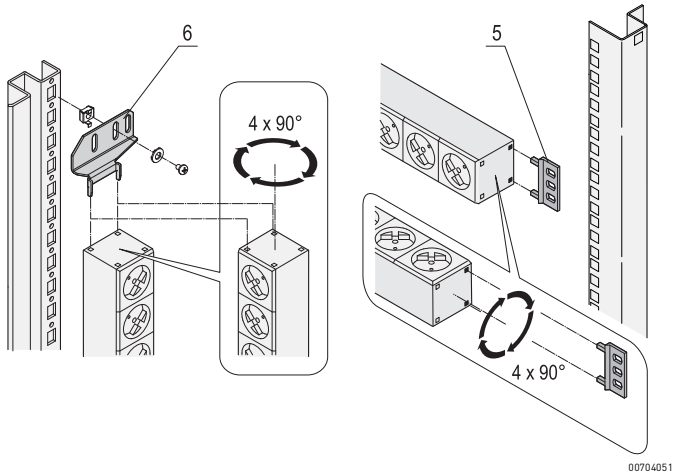

00704051

Item 6: bracket for vertical mounting

ServicePLUS see page 3.71

- Socket strips with C19 IEC sockets (8 or 12 pieces)
- Mounting height 1 U
- Connecting cable 2 m, with connector in accordance with IEC 60309
- Socket strips can be rotated through all four directions (in 90° increments) during installation
- Vertical mounting (19" version horizontal or vertical)
- 230 V, 32 A (with 2 x 16 A fuse), 16 A (without fuse)

CE

Delivery comprises

Item	Qty	Description
1	1	Al extrusion, 1 U, anodised, for sockets and functional elements
2		Sockets, IEC 60320 C19 (PA, RAL 7035), for type and quantity see Order information
3	2	End piece, PA, RAL 7035
4	1	Connecting cable, 2 m, with IEC 60309 connector
5	2	Mounting bracket, PA, RAL 7035, only for 19" versions

Order Information

Sockets IEC 60320 C19	Length Inch	Length mm	Depth mm	Input	Fuse	Part no.
8	19"	438.5	44	230 V_{AC}, 16 A	–	**60110-280**
12	–	947.5	44	230 V_{AC}, 16 A	–	**60110-282**
12	–	947.5	44	230 V_{AC}, 32 A	2 x 16 A	**60110-281**
Delivery: fitted in cabinet or on frame						**Part no./05**
Delivery: supplied loose with cabinet or frame						**Part no./35**
Accessories						
Item 6 Mounting bracket for one socket strip for vertical mounting, St, 2 mm, PU 2 pieces						**20110-068**
Mounting plate for mounting of two socket strips side by side for vertical mounting, St, 2 mm, height 70 mm, depth 135 mm, PU 2 pieces						23130-010

Note

- Please order bracket for vertical mounting separately
- 19" assembly kit see page 3.17
- Individual online configuration www.schroff.biz/conf

IEC socket strip, 3 phase

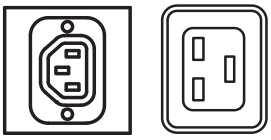

00709019 DTA44118 00709050

C13 C19

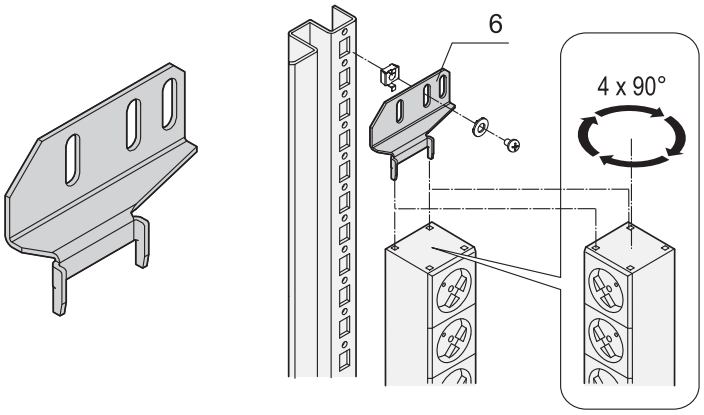

00502502

Item 6: bracket for vertical mounting

ServicePLUS see page 3.71

- Socket strips with IEC sockets in accordance with IEC 60320 (C13 or C13/C19)
- Mounting height 1 U
- Connecting cable 2 m, 3 phase, with connector plug in accordance with IEC 60309 (16 A or 32 A)
- Socket strips can be rotated through all four directions (in 90° increments) during installation
- Vertical mounting
- 400 V, 32 A (with 6 x 16 A fuse), 16 A (without fuse)

CE

Delivery comprises

Item	Qty	Description
1	1	Al extrusion, 1 U, anodised, for sockets and functional elements
2		Sockets IEC 60320 (PA, RAL 7035), type and quantity see Order information
3	2	End piece, PA, RAL 7035
4	1	Connecting cable, 2 m, with IEC 60309 connector

Order Information

Input	Length mm	Depth mm	Output	Fuse	Part no.
400 V_{AC}, 16 A	947.5	44	18 x IEC C13	–	**60110-283**
400 V_{AC}, 16 A	947.5	44	18 x IEC C13, 6 x IEC C19	–	**60110-284**
400 V_{AC}, 32 A	1753	44	24 x IEC C13, 6 x IEC C19	6 x 16 A	**60110-285**
Delivery: fitted in cabinet or on frame					**Part no./05**
Delivery: supplied loose with cabinet or frame					**Part no./35**
Accessories					
Item 6 Mounting bracket for one socket strip for vertical mounting, St, 2 mm, PU 2 pieces					**20110-068**
Mounting plate for mounting of two socket strips side by side for vertical mounting, St, 2 mm, height 70 mm, depth 135 mm, PU 2 pieces					23130-010

Note

- Please order bracket for vertical mounting separately
- 19" assembly kit see page 3.17
- Individual online configuration www.schroff.biz/conf

Cabinet Accessories – Socket strips

Socket strips with 2 supply cables, SCHUKO and IEC, 3 phase

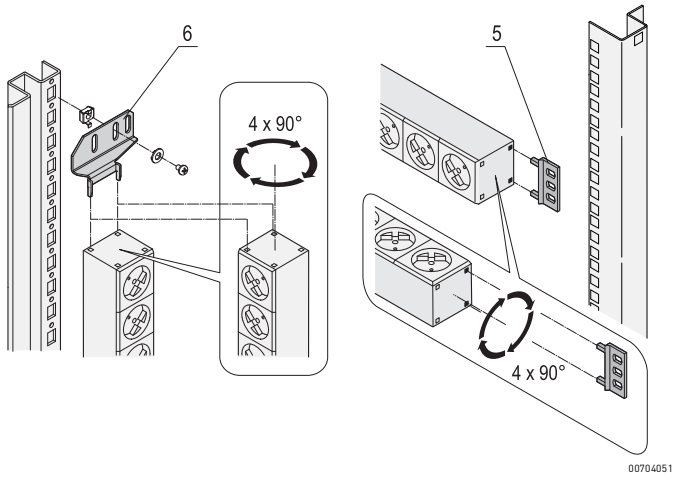

ServicePLUS see page 3.71

- Socket strips with IEC 60320-C13 sockets and SCHUKO sockets
- Mounting height 1 U
- Two connector cables (halved in direction of length), 3 m (with open end), 2 x 3 phase, 400 V_{AC} (red, black, white area)
- Socket strips can be rotated in all directions (in 90° increments) during installation
- Horizontal and vertical assembly possible

CE

NEW

Delivery includes

Item	Qty	Description
1	1	Al extrusion, 1 U, anodized, for socket inserts
2		Socket inserts, IEC 60320 (PA, RAL 7035), type and quantity see Order information
3	2	Endpiece, PA, RAL 7035
4	1	Connector cable, 2 x 2 m, open cable end for laying

Order Information

Input	Length mm	Depth mm	Output	Part no.
400 V_{AC}, 16 A	1848.5	44	36 x IEC C13 + 12 x SCHUKO	**60110-286**
400 V_{AC}, 16 A	1848.5	44	48 x IEC C13	**60110-287**
Delivery: fitted in cabinet or on frame				**Part no./05**
Delivery: supplied loose with cabinet or frame				**Part no./35**
Accessories				
Item 6 Mounting bracket for one socket strip for vertical mounting, St, 2 mm, PU 2 pieces				**20110-068**
Mounting plate for mounting of two socket strips side by side for vertical mounting, St, 2 mm, height 70 mm, depth 135 mm, PU 2 pieces				23130-010

Note

- Fixing bracket for vertical mounting, only required for fitting into 47 U cabinet, please order separately

BS socket strip

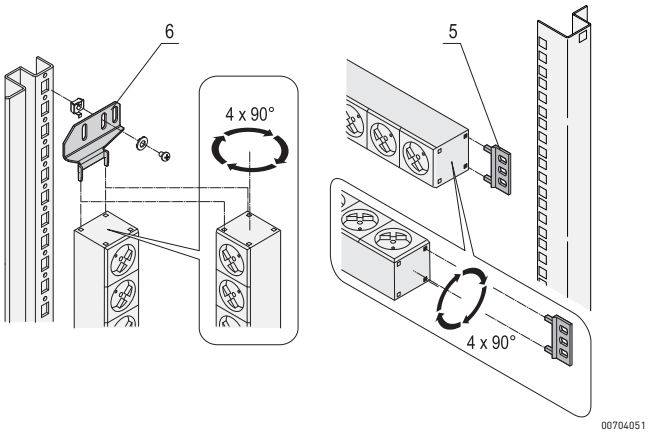

Item 6: bracket for vertical mounting

ServicePLUS see page 3.71

- Socket strips with British Standard sockets, optionally with switch
- Installation height 1 U
- Supply cable 2 m with BS plug (fuse integrated)
- Socket strips can be rotated through all four directions (in 90° increments) during installation
- Horizontal and vertical mounting
- 230 V, 13 A
- In accordance with BS 1363

CE

Delivery comprises (assembled)

Item	Qty	Description
1	1	Al extrusion, 1 U, anodised, for sockets and functional elements
2		BS sockets (PA, RAL 7035) and switch (illuminated), type and quantity see Order information
3	2	End piece, PA, RAL 7035
4	1	Connecting cable, black, 2 m, 05VV-F 3G 1.5 mm^2, with BS connector (integrated 13 A fuse), PVC, encapsulated
5	2	Mounting bracket, PA, RAL 7035, only for 19" versions

Order Information

Description	Sockets	Length Inch	Length mm	Depth mm	Part no.
BS	7	19"	438.5	44	**60110-243**
BS	10	–	947.5	44	**60110-244**
BS with switch	6	19"	438.5	44	**60110-245**
Delivery: fitted in cabinet or on frame					**Part no./05**
Delivery: supplied loose with cabinet or frame					**Part no./35**
Accessories					
Item 6 Mounting bracket for one socket strip for vertical mounting, St, 2 mm, PU 2 pieces					**20110-068**
Mounting plate for mounting of two socket strips side by side for vertical mounting, St, 2 mm, height 70 mm, depth 135 mm, PU 2 pieces					23130-010

Note

- Please order mounting bracket for vertical mounting separately
- Individual online configuration www.schroff.biz/conf

Cabinet Accessories – Socket strips

USA socket strip

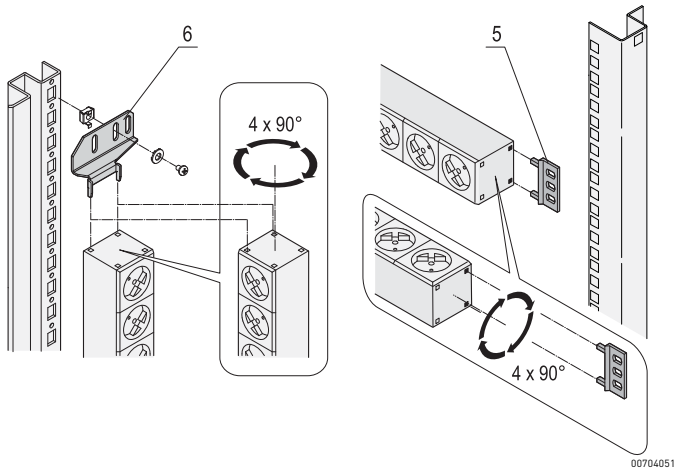

Item 6: bracket for vertical mounting

ServicePLUS see page 3.71

- Socket strips with USA sockets, alternatively with switch
- Mounting height 1 U
- Connecting cable 2 m, with USA plug
- Socket strips can be rotated through all four directions (in 90° increments) during installation
- Horizontal and vertical mounting
- 115 V, 15 A
- In accordance with UL-498

Delivery comprises (assembled)

Item	Qty	Description
1	1	Al extrusion, 1 U, anodised, for sockets and functional elements
2		USA sockets (PA, RAL 7035) and switch (illuminated), for type and quantity see Order information
3	2	End piece, PA, RAL 7035
4	1	Connecting cable, black, 2 m, 05VV-F 3G 1.5 mm^2, with USA socket, PVC, encapsulated
5	2	Mounting bracket, PA, RAL 7035, only for 19" versions

Order Information

Description	Socket inserts	Length Inch	Length mm	Depth mm	Part no.
US	11	19"	438.5	44	**60110-240**
US	15	–	947.5	44	**60110-241**
US with switch	11	19"	438.5	44	**60110-242**
Delivery: fitted in cabinet or on frame					**Part no./05**
Delivery: supplied loose with cabinet or frame					**Part no./35**
Accessories					
Item 6 Mounting bracket for one socket strip for vertical mounting, St, 2 mm, PU 2 pieces					**20110-068**
Mounting plate for mounting of two socket strips side by side for vertical mounting, St, 2 mm, height 70 mm, depth 135 mm, PU 2 pieces					23130-010

Note

- Please order mounting bracket for vertical mounting separately
- Individual online configuration **www.schroff.biz/conf**

Swiss socket strip

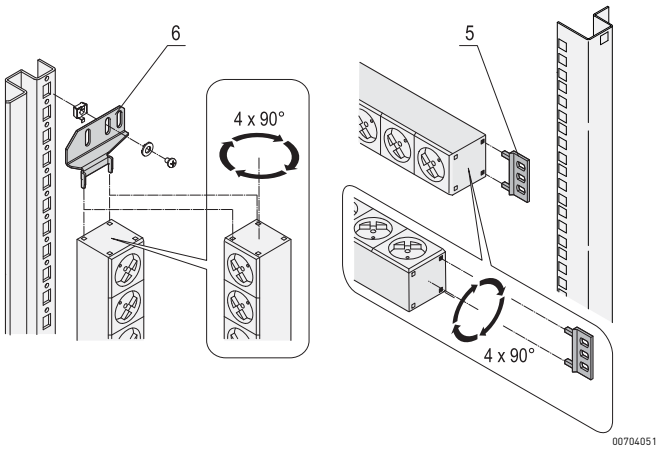

Item 6: bracket for vertical mounting

ServicePLUS see page 3.71

- Socket strips with sockets, Swiss version, optionally with switch
- Installation height 1 U
- Connecting cable 2 m with Swiss version plug
- Socket strips can be rotated through all four directions (in 90° increments) during installation
- Horizontal and vertical mounting
- 230 V, 10 A
- In accordance with SEV.IEC 60884

CE

Delivery comprises (assembled)

Item	Qty	Description
1	1	Al extrusion, 1 U, anodised, for sockets and functional elements
2		Sockets, Swiss version (PA, RAL 7035), switch (illuminated), for type and quantity see Order information
3	2	End piece, PA, RAL 7035
4	1	Supply cable, black, 2 m, 05VV-F 3G 1.0 mm^2, with plug (Swiss version), PVC, moulded
5	2	Mounting bracket, PA, RAL 7035

Order Information

Description	Sockets	Length Inch	Length mm	Depth mm	Part no.
Swiss version	10	19"	438.5	44	**60110-453**
Swiss version with switch	9	19"	438.5	44	**60110-454**
Delivery: fitted in cabinet or on frame					**Part no./05**
Delivery: supplied loose with cabinet or frame					**Part no./35**
Accessories					
Item 6 Mounting bracket for one socket strip for vertical mounting, St, 2 mm, PU 2 pieces					**20110-068**
Mounting plate for mounting of two socket strips side by side for vertical mounting, St, 2 mm, height 70 mm, depth 135 mm, PU 2 pieces					23130-010

Note

- Please order mounting bracket for vertical mounting separately
- Individual online configuration www.schroff.biz/conf

Cabinet Accessories – Socket strips

Socket strips with power measurement readout on local display

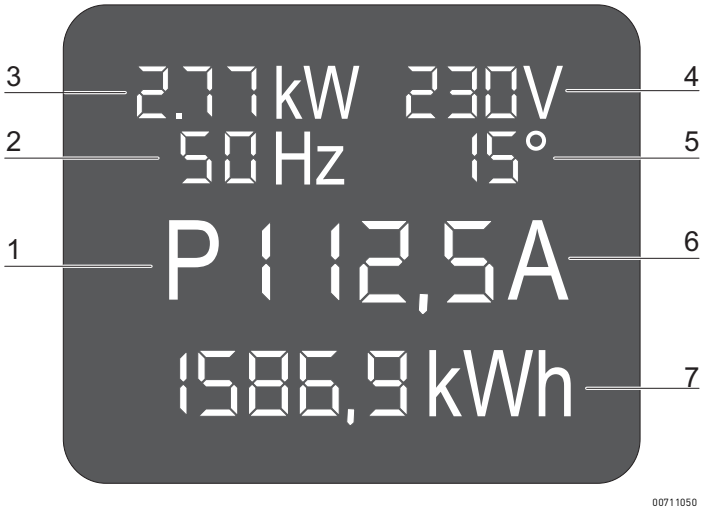

1: Phase indication (P1) - shows measured phase values
2: Frequency (Hz) - current mains frequency
3: Power measurement (kW) - actual power being consumed by consumers taking phase shift into consideration (power consumption of connected devices)
4: Mains voltage (V) - current voltage of mains to which the measurement unit is currently connected
5: Phase angle (°) - phase shift in the mains supply
6: Current (A) - current now being drawn by the connected devices
7: Kilowatt-hours (kWh) - energy meter to record the energy consumption of the connected equipment

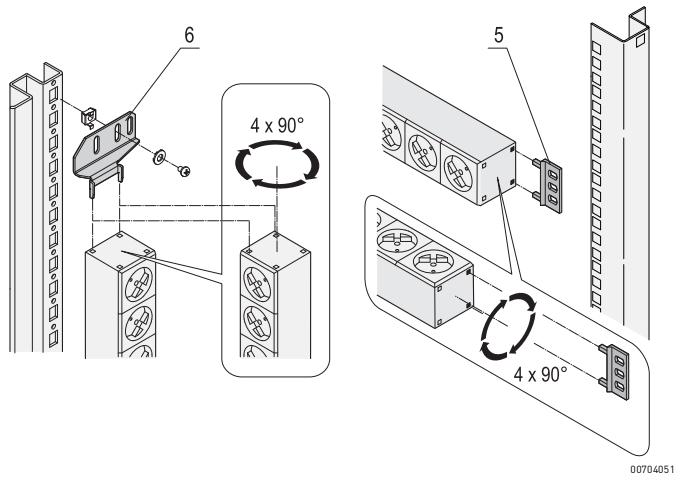

- Socket strips with Schuko or IEC 60320-C13 sockets
- Integrated measurement and display via local display unit
- Mounting height 1 U
- Socket strips can be rotated through all four directions (in 90° increments) during installation
- Horizontal and vertical mounting

CE NEW

Delivery comprises

Item	Qty	Description
1	1	Al extrusion, 1 U, anodised, to accept the sockets and display
2		Sockets, PA, for type and quantity see Order information
3	2	End piece, PA, RAL 7035
4	1	Connecting cable, black, 2 m, 05VV-F 3G 1.5 mm^2, with SCHUKO/UTE connector, PVC, encapsulated
5	2	Mounting bracket, PA, RAL 7035
7	1	User manual

Order Information

Height U	Length mm	Measure-ments	Depth mm	Number of outputs	Part no.
1	19" 438.5	I, V, P, f, cos phi	44	7 x SCHUKO, "German 3-wire", earthed/grounded	**60110-294**
1	19" 438.5	I, V, P, f, cos phi	44	8 x IEC C13	**60110-296**
Delivery: fitted in cabinet or on frame					**Part no./05**
Delivery: supplied loose with cabinet or frame					**Part no./35**
Accessories					
Item 6 Mounting bracket for one socket strip for vertical mounting, St, 2 mm, PU 2 pieces					**20110-068**
Mounting plate for mounting of two socket strips side by side for vertical mounting, St, 2 mm, height 70 mm, depth 135 mm, PU 2 pieces					23130-010

Cabinet Accessories – Socket strips

19" power distributor , 3-phase

00708033

00708035

Overcurrent protection switch (per phase and output socket)

00708034

Rear: Plug retaining clip and cable fitting

00708041

Mains cable for Wieland® socket strips

ServicePLUS see page 3.71

- 3-phase distributor for connecting to single-phase consumers or socket strips
- Input 3-phase 400 V_{AC} (32 A or 63 A)
- Output via IEC 60320-C19 sockets
  - 6 × 230 V_{AC} in 32 A/phase version
  - 9 × 230 V_{AC} in 63 A/phase version
- Overcurrent protection for each output

CE

Delivery comprises (assembled)

Item	Qty	Description
1	1	19" power distributor, 3 U, St, 1.5 mm, RAL 7021, with cable fitting M32, plastic, white
2	6/9	Socket inserts IEC 60320-C19, with plug retaining clip, quantity see Order information
3	6/9	Overcurrent protection switch, 16 A, quantity see Order information
4	2	Handle, Al, black, incl. assembly kit (supplied loose)

Order Information

Height mm	Width mm	Depth mm	Output	Input	Part no.
131	484	250	6 (2 × 230 V_{AC} per phase)	3 × 32 A (400 V_{AC})	**60110-365**
131	484	250	9 (3 × 230 V_{AC} per phase)	3 × 63 A (400 V_{AC})	**60110-366**
Delivery: fitted in cabinet or on frame					**Part no./05**
Delivery: supplied loose with cabinet or frame					**Part no./35**
Accessories					
Mains cable, IEC 60320 C20 plug, Wieland® socket to connect 19" power distributor to Wieland® sockets length 1 m, 1 piece					**60110-326**
Mains cable, IEC 60320 C20 plug, Wieland® socket to connect 19" power distributor to Wieland® sockets length 1 m, 1 piece					**60110-327**
Mains cable, IEC 60320 C20 plug, Wieland® socket to connect 19" power distributor to Wieland® sockets length 5 m, 1 piece					**60110-328**

Note

- SCHUKO socket strip see page 3.67
- UTE socket strip see page 3.68
- IEC socket strip see page 3.69

Cabinet Accessories – Socket strips

SCHUKO socket strip with Wieland® input

Overcurrent protection switch

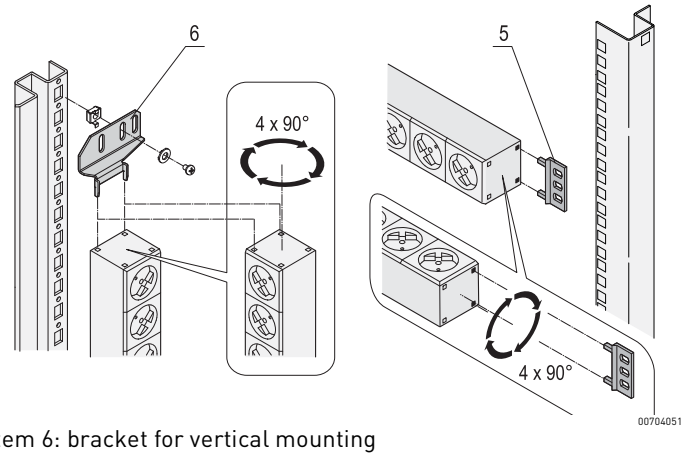

Item 6: bracket for vertical mounting

- Installation height 1 U
- Input via Wieland® GST 18 plug
- Output via SCHUKO sockets
- Versions with or without overcurrent protection
- Sockets in white, black or red
- Socket strips can be rotated through all four directions (in 90° increments) during installation
- Horizontal or vertical mounting
- In accordance with DIN 57620

CE

Delivery comprises

Item	Qty	Description
1	1	Al extrusion, 1 U, anodised, length 438.5 mm, depth 44 mm, height 44.45; to accept the sockets
2	6/8	Sockets (rotated 35°, polyamide), quantity and colour see Order information
3	2	End piece, PA, RAL 7035
4	1	Wieland connecting socket® GST 18
5	2	Mounting bracket, PA, RAL 7035

Note

- Please order bracket for vertical mounting seperately
- Mains connection cables, see page 3.70
- 19" power distributor for connection of multiple socket strips, see page 3.66
- Individual online configuration www.schroff.biz/conf

ServicePLUS see page 3.71

Order Information

Description	Sockets	Length Inch	Length mm	Depth mm	Functional element	Part no.
SCHUKO, white, Wieland®,with over-current protection switch	6	19"	438.5	44	Overcurrent protection	**60110-352**
SCHUKO, black, Wieland®,with over-current protection switch	6	19"	438.5	44	Overcurrent protection	**60110-353**
SCHUKO, red, Wieland®,with over-current protection switch	6	19"	438.5	44	Overcurrent protection	**60110-354**
SCHUKO, white, Wieland®	8	19"	438.5	44	–	**60110-343**
SCHUKO, black, Wieland®	8	19"	438.5	44	–	**60110-344**
SCHUKO, red, Wieland®	8	19"	438.5	44	–	**60110-345**
Delivery: fitted in cabinet or on frame						**Part no./05**
Delivery: supplied loose with cabinet or frame						**Part no./35**
Accessories						
Item 6 Mounting bracket for one socket strip for vertical mounting, St, 2 mm, PU 2 pieces						**20110-068**
Mounting plate for mounting of two socket strips side by side for vertical mounting, St, 2 mm, height 70 mm, depth 135 mm, PU 2 pieces						23130-010

UTE socket strip with Wieland® connection

Overcurrent protection switch

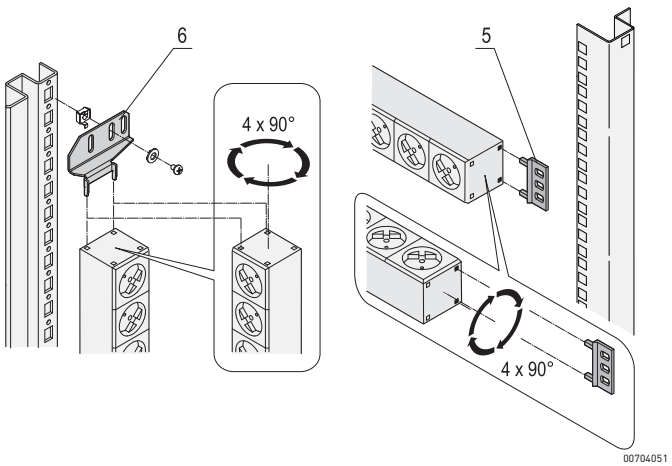

Item 6: bracket for vertical mounting

- Installation height 1 U
- Input via Wieland® GST 18 plug
- Output via UTE sockets
- Versions with or without overcurrent protection
- Sockets in white, black or red
- Socket strips can be rotated through all four directions (in 90° increments) during fitting
- Horizontal or vertical mounting
- In accordance with NFC 61-303

CE

Delivery comprises

Item	Qty	Description
1	1	Al extrusion, 1 U, anodised, length 438.5 mm, depth 44 mm, height 44.45; to accept the sockets
2	6/8	Socket inserts (rotated 35°, polyamide), quantity and colour see Order information
3	2	End piece, PA, RAL 7035
4	1	Wieland connecting socket® GST 18
5	2	Mounting bracket, PA, RAL 7035

Note

- Please order mounting bracket for vertical mounting separately
- Mains connection cables see page 3.70
- 19" power distributor to connect multiple socket strips see page 3.66
- Individual online configuration www.schroff.biz/conf

ServicePLUS see page 3.71

Order Information

Description	Sockets	Length Inch	Length mm	Depth mm	Functional element	Part no.
UTE, white, Wieland®, with over-current protection switch	6	19"	438.5	44	Overcurrent protection	**60110-355**
UTE, black, Wieland®, with over-current protection switch	6	19"	438.5	44	Overcurrent protection	**60110-356**
UTE, red, Wieland®, with over-current protection switch	6	19"	438.5	44	Overcurrent protection	**60110-357**
UTE, white, Wieland®	8	19"	438.5	44	–	**60110-346**
UTE, black, Wieland®	8	19"	438.5	44	–	**60110-347**
UTE, red, Wieland®	8	19"	438.5	44	–	**60110-348**
Delivery: fitted in cabinet or on frame						**Part no./05**
Delivery: supplied loose with cabinet or frame						**Part no./35**
Accessories						
Item 6 Mounting bracket for one socket strip for vertical mounting, St, 2 mm, PU 2 pieces						**20110-068**
Mounting plate for mounting of two socket strips side by side for vertical mounting, St, 2 mm, height 70 mm, depth 135 mm, PU 2 pieces						23130-010

Cabinet Accessories – Socket strips

IEC socket strip with Wieland® connection

- Installation height 1 U
- Input via Wieland®GST 18 plug
- Output via IEC 60320 C-13 sockets
- Versions with or without overcurrent protection
- Socket inserts in white, black or red
- Socket strips can be rotated through all four directions (in 90° increments) during fitting
- Horizontal or vertical mounting
- In accordance with IEC 60320

CE

Strain relief provided by locking tabs

Overcurrent protection switch

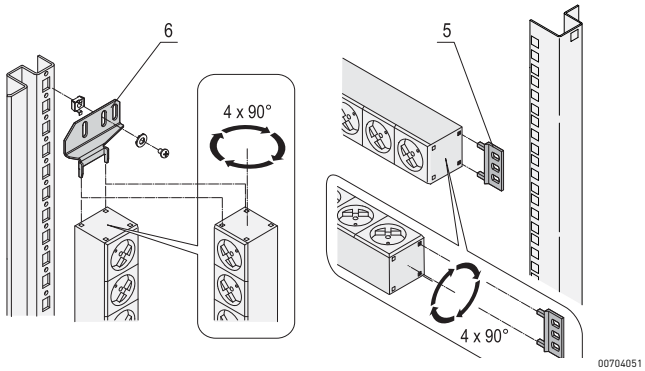

Item 6: bracket for vertical mounting

Delivery comprises

Item	Qty	Description
1	1	Al extrusion, 1 U, anodised, length 438.5 mm, depth 44 mm, height 44.45; to accept the sockets
2	6/12	Sockets (rotated 35°, polyamide), quantity and colour see Order information
3	2	End piece, PA, RAL 7035
4	1	Wieland connecting socket® GST 18
5	2	Mounting bracket, PA, RAL 7035

Note

- Please order mounting bracket for vertical mounting separately
- Mains connection cables see page 3.70
- 19" power distributor to connect multiple socket strips see page 3.66
- Individual online configuration www.schroff.biz/conf

Order Information

Description	Sockets	Length Inch	Length mm	Depth mm	Functional element	Part no.
IEC, white, Wieland®, with over-current protection switch	6	19"	438.5	44	Overcurrent protection	**60110-349**
IEC, black, Wieland®, with over-current protection switch	6	19"	438.5	44	Overcurrent protection	**60110-350**
IEC, red, Wieland®, with over-current protection switch	6	19"	438.5	44	Overcurrent protection	**60110-351**
IEC, white, Wieland®	12	19"	438.5	44	–	**60110-340**
IEC, black, Wieland®	12	19"	438.5	44	–	**60110-341**
IEC, red, Wieland®	12	19"	438.5	44	–	**60110-342**
Delivery: fitted in cabinet or on frame						**Part no./05**
Delivery: supplied loose with cabinet or frame						**Part no./35**
Accessories						
Item 6 Mounting bracket for one socket strip for vertical mounting, St, 2 mm, PU 2 pieces						**20110-068**
Mounting plate for mounting of two socket strips side by side for vertical mounting, St, 2 mm, height 70 mm, depth 135 mm, PU 2 pieces						23130-010
Locking tab for IEC 60320-C13 connector PU 12 pieces						**60110-362**
Mains cable, IEC for locking tab IEC 60320-C14 plug, IEC 60320 C13 socket, 0.5 m, 1 piece						**60110-360**
Mains cable, IEC for locking tab IEC 60320-C14 plug, IEC 60320 C13 socket, 1 m, 1 piece						**60110-361**

Connecting cables for Wieland® socket strips

00708031

ServicePLUS see page 3.71

- Enables simple connection to current supply (e.g. for socket strips)
- Different connecting plugs
- Different cable lengths available

CE

Delivery comprises

Pos.	Menge	Beschreibung
1	1	Connecting cable, 1.5 mm^2, black, input, output and cable lengths see Order information

Order Information

Input	Current A	Output	Length m	Part no.
Open end	16	Wieland® GST 18	1	**60110-320**
Open end	16	Wieland® GST 18	2.5	**60110-321**
Open end	16	Wieland® GST 18	5	**60110-322**
IEC 60309	16	Wieland® GST 18	1	**60110-323**
IEC 60309	16	Wieland® GST 18	2.5	**60110-324**
IEC 60309	16	Wieland® GST 18	5	**60110-325**
IEC 60320 C20	16	Wieland® GST 18	1	**60110-326**
IEC 60320 C20	16	Wieland® GST 18	2.5	**60110-327**
IEC 60320 C20	16	Wieland® GST 18	5	**60110-328**
SCHUKO (German 3-wire earthed) / UTE	16	Wieland® GST 18	1	**60110-329**
SCHUKO (German 3-wire earthed) / UTE	16	Wieland® GST 18	2.5	**60110-330**
BS plug	13	Wieland® GST 18	1	**60110-331**
BS plug	13	Wieland® GST 18	2.5	**60110-332**

Note

- Other inputs, outputs and cable lengths available on request
- Individual online configuration www.schroff.biz/conf

Cabinet Accessories – Socket strips

Three phase power distribution with 19" power distributor and socket strips with Wieland® connection

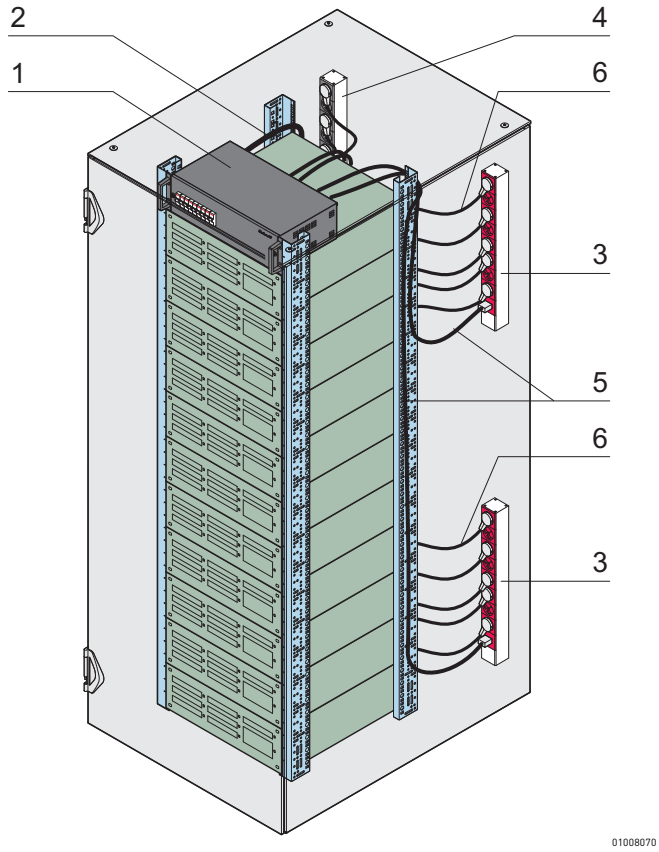

- Modular construction
- Connection of 19" power distributor (3-phase) in cabinet requires an electrician
- Simple cabling of socket strips with plug-and-play functionality

Cabling example

Item	Description
1	19" power distributor
2	3-phase current connecting cable
3	Socket strips with Wieland® connection, red
4	Socket strips with Wieland® connection, black
5	Mains cable, from 19" power distributor to socket strip
6	Mains cable, from socket strip to consumer (e.g. server)

configuration

Components can be varied and combined freely

Simple. Fast. For the product you want.

- Configuration
  - Various constructions (lengths)
  - Various sockets
  - Various mains connector cables
  - Single and multi-phase
  - Combinations of functions (interference suppression filters, residual current circuit breakers, overcurrent protection, transient protection)
- Online configuration: www.schroff.co.uk/configuration

solution

Integration and customised developments

Simple. Fast. From one source.

- Integration in cabinet incl. cabling and function test
- Customised solutions

Content

Cabinets 1

Wall mounted cases 2

Accessories for cabinets and wall mounted cases . 3

Climate control . 4

Electronics cases 5

Subracks/ 19" chassis 6

Front panels, plug-in units ... 7

Systems 8

Power supply units 9

Backplanes ... 10

Connectors, front panel component system 11

Appendix 12

Cabinet Accessories – Power Control socket strips

00711001

00715001

Display

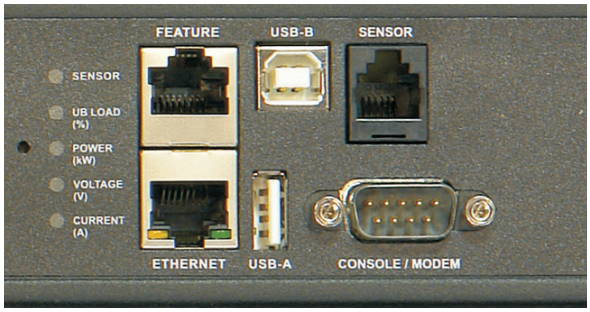

00711009

Interfaces

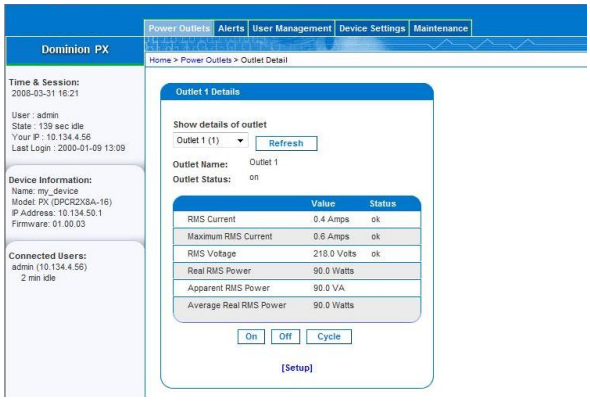

00708013

Telemonitoring and parametrisation with web-based user interface

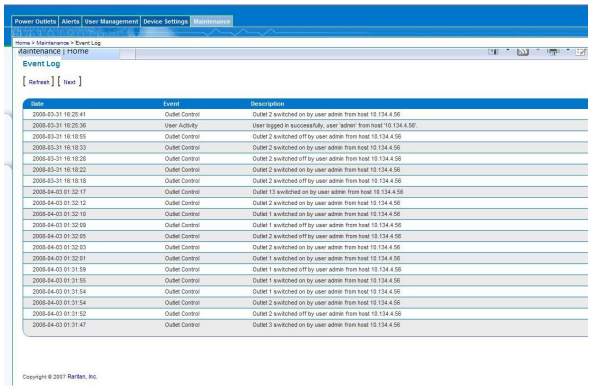

00708014

Event logging

Cabinet Accessories – Power Control socket strips

Power Management

- Monitoring of power, current and voltage of the entire socket strip or for each separate socket insert
- Telemonitoring and local indication via display
- Remote control of individual inserts (switch on/off)
- Programmable sequential switch-on/off of individual inserts
- Individual user access authorisations for each socket insert

00715002

Multimeter

- Measurement of current, voltage, apparent power, true power and power factor per phase or outlet
- Data sent to network or shown on local display

00715006

Telemonitored socket strips

- Measurement of current, voltage, apparent power, true power and power factor per phase or outlet
- Data sent to network or shown on local display
- Measurement at phase level and switch function on request

Telemonitored and remote-controlled socket strips

- Measurement of current, voltage, apparent power, true power and energy consumption at outlet level
- Data sent to network or shown on local display
- Remote-controlled switch-on/off of individual outputs

00715007

Environmental sensors

- Sensors (temperature, humidity, differential pressure, airflow...) and hub for connecting multiple sensors, see from page 3.49

30407004

ServicePLUS from page 3.79

e.g. individual configuration (dimensions, socket inserts, mains supply)

www.schroff.biz/ServicePLUS

Overview 3.72
Multimeter 3.74
Telemonitored (per phase) socket strips 3.75
Remote-controlled socket strips, telemonitored on each phase 3.76
Remote-controlled socket strips, telemonitored on each outlet 3.77
Power management software 3.78
ServicePLUS 3.79

Cabinet Accessories – Power Control socket strips

Telemonitored multimeter

00715002

Front view

00715003

Rear view

- Inline meter, 1 U, 19" case with 19" mounting brackets
- Measures current, voltage and power (apparent and true power) per phase and total
- Local display of current and voltage per phase and sum values
- Ethernet interface and web interface
- 4 consumers or socket strips can be connected; input via IEC 60320 C20 plug; outlet via IEC 60320 C19 sockets
- Mains input via C13 socket conforming to IEC 60320
- To record temperature, humidity etc, environmental sensors can be connected

NEW

Delivery includes

Item	Qty	Description
1	1	Case, black, width 440.0 mm, display and control keys, interfaces on front and rear
2	1	Mains cable, C13 socket to IEC 60320, cable length 1.5 m
3	2	19" mounting bracket, length 305 mm, St, 1 mm, black
4	1	Cable support rail

Order Information

Height U	Width mm	Depth mm	Input	Number of outputs	Output current A	Part no.
1	440.0	183	4 × IEC C20	4 × IEC C19	16	60110-446
Accessories						
Temperature sensor Cable length 3 m, 1 piece						60110-313
Temperature/ humidity combi sensor Cable length 3 m, 1 piece						60110-314
Two temperature/ humidity combi sensors Cable length 2 x 3 m, 2 pieces						60110-315
Dual potential-free contact sensor Cable length x m, 1 piece						DPX-CC2-TR
Two temperature sensors and one temperature/ humidity combi sensor Cable length 3 x 3 m, 1 piece						DPX-T3H1
Differential pressure and temperature sensor Cable length 3 m, 1 piece						DPX-T1DP1
Airflow sensor Cable length 3 m, 1 piece						DPX-AF1
Hub to accept 4 sensors connecting cable 1 m, assembly kit, 1 piece						60110-316

Note

- 3-phase version on request
- User manual and current firmware is available for download: Please enter order number at **www.schroff.biz/oneclick/**
- For power management software see page 3.78
- Suitable socket strips see Socket Strips chapter, page 3.58
- Sensors (temperature, humidity, differential pressure, airflow...) and hub for connecting multiple sensors, see from page 3.48
- 19" assembly kit, see page 3.17

Cabinet Accessories – Power Control socket strips

Telemonitored (per phase) socket strips

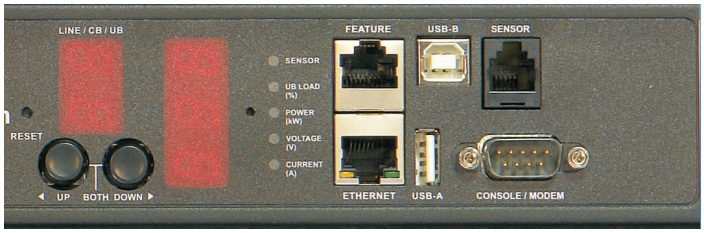

00711009

Display, interface

- Measurement of current, voltage and power (apparent and true power) per phase and sum value
- Local display of current and voltage per phase and sum value
- Ethernet interface and web interface
- Outlets to IEC 60320 with C13 sockets (230 V_{AC}, 10 A) and C19 sockets (230 V_{AC}, 16 A)
- Mains supply 230 V_{AC}/400 V_{AC}, 16 A or 32 A plug, cable length 3 m
- With magnetic circuit breakers to UL 489 (for 32 A version)
- To record temperature, humidity etc, environmental sensors can be connected

Delivery includes

Item	Qty	Description
1	1	Socket strip, black, with interfaces, socket inserts and display, mains cable length 3 m
2	1	Fixing materials kit
3	1	User manual

Order Information

Length mm	Inch	Height mm	Depth mm	Input	Number of outputs	Part no.
440	19"	44	133.0	230 V_{AC}, 16 A, 1-phase, IEC 60320 C20	8 x IEC C13	60110-306
1298	–	52	43.0	230 V_{AC}, 16 A, 1-phase, IEC 60320 C20	24 x IEC C13	60110-307
1539	–	52	53.0	230 V_{AC}, 32 A, 1-phase, IEC 60309	20 x IEC C13, 4 x IEC C19	60110-308
1780	–	55	52	400 V_{AC}, 32 A, 3-phase, IEC 60309	24 x IEC C13, 12 x IEC C19	60110-455
Accessories						
Temperature sensor Cable length 3 m, 1 piece						60110-313
Temperature/ humidity combi sensor Cable length 3 m, 1 piece						60110-314
Two temperature/ humidity combi sensors Cable length 2 x 3 m, 2 pieces						60110-315
Dual potential-free contact sensor Cable length x m, 1 piece						DPX-CC2-TR
Two temperature sensors and one temperature/ humidity combi sensor Cable length 3 x 3 m, 1 piece						DPX-T3H1
Differential pressure and temperature sensor Cable length 3 m, 1 piece						DPX-T1DP1
Airflow sensor Cable length 3 m, 1 piece						DPX-AF1
Hub to accept 4 sensors connecting cable 1 m, assembly kit, 1 piece						60110-316

Note

- Versions with additional switching function on request
- Interface description, user manual, current firmware: To download please enter part number at **www.schroff.biz/oneclick/**
- For power management software see page 3.78
- Sensors (temperature, humidity, differential pressure, airflow...) and hub for connecting multiple sensors see from page 3.48

Cabinet Accessories – Power Control socket strips

Remote-controlled socket strips, telemonitored on each phase

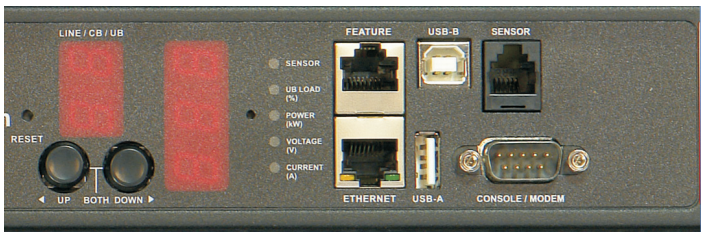

Display, interface

- Measures current, voltage and power (apparent and true power) per phase and total
- Local display of current and voltage per phase and sum values
- Remote-controlled on/off switching of connected consumers
- Ethernet interface and web interface
- Outlets to IEC 60320 with C13 sockets (230 V_{AC}, 10 A) and C19 sockets (230 V_{AC}, 16 A)
- Mains supply 230 V_{AC}/ 400 V_{AC}, 16 A or 32 A plug, cable length 3 m
- With magnetic circuit breakers to UL 489 (for 32 A version)
- To record temperature, humidity etc, environmental sensors can be connected

NEW

Delivery includes

Item	Qty	Description
1	1	Socket strip, black, with interfaces, socket inserts and display, mains cable length 3 m
2	1	Fixing materials kit
3	1	User manual

Order Information

Length mm	Inch	Height mm	Depth mm	Input	Number of outputs	Part no.
440	19"	44	133	230 V_{AC}, 16 A, 1-phase, IEC 60320 C20	8 x IEC C13	60110-447
1297	–	52	65	230 V_{AC}, 16 A, 1-phase, IEC 60320 C20	24 x IEC C13	60110-449
1539	–	52	65	230 V_{AC}, 32 A, 1-phase, IEC 60309	20 x IEC C13, 4 x IEC C19	60110-448
1780	–	52	65	400 V_{AC}, 32 A, 3-phase, IEC 60309	24 x IEC C13, 12 x IEC C19	60110-450
Accessories						
Temperature sensor Cable length 3 m, 1 piece						60110-313
Temperature/ humidity combi sensor Cable length 3 m, 1 piece						60110-314
Two temperature/ humidity combi sensors Cable length 2 x 3 m, 2 pieces						60110-315
Dual potential-free contact sensor Cable length x m, 1 piece						DPX-CC2-TR
Two temperature sensors and one temperature/ humidity combi sensor Cable length 3 x 3 m, 1 piece						DPX-T3H1
Differential pressure and temperature sensor Cable length 3 m, 1 piece						DPX-T1DP1
Airflow sensor Cable length 3 m, 1 piece						DPX-AF1
Hub to accept 4 sensors connecting cable 1 m, assembly kit, 1 piece						60110-316

Note

- Interface description, user manual, current firmware: To download please enter part number at www.schroff.biz/oneclick/
- For power management software see page 3.78
- Sensors (temperature, humidity, differential pressure, airflow...) and hub for connecting multiple sensors see from page 3.48

Cabinet Accessories – Power Control socket strips

Remote-controlled socket strips, telemonitored on each outlet

- Remote-controlled on/off switching of connected consumers
- Measures current, voltage and power (apparent and true power) per outlet, phase and total
- Local display of current and voltage per outlet, phase and total
- Ethernet interface and web interface
- Outlets to IEC 60320 with C13 sockets (230 V_{AC}, 10 A) and C19 sockets (230 V_{AC}, 16 A)
- Mains input 230 V_{AC}, 32 A plug to IEC 60309, cable length 3 m
- With magnetic circuit breakers to UL 489
- To record temperature, humidity etc, environmental sensors can be connected

NEW

Delivery includes

Item	Qty	Description
1	1	Socket strip, black, with interfaces, socket inserts and display, mains cable length 3 m
2	1	Fixing materials kit
3	1	User manual

Order Information

Length mm	Inch	Height mm	Depth mm	Input	Number of outputs	Part no.
440	19"	44	183	230 V_{AC}, 16 A, 1	8 x IEC C13	60110-442
1539	–	52	65	230 V_{AC} 32 A, 1-phase, IEC 60309	20 x IEC C13	60110-443
1539	–	52	65	230 V_{AC}, 32 A, 1-phase, IEC 60309	20 x IEC C13, 4 x IEC C19	60110-444
1539	–	52	65	400 V_{AC}, 32 A, 3-phase, IEC 60309	21 x IEC C13, 3 x IEC C19	60110-445
Accessories						
Temperature sensor Cable length 3 m, 1 piece						60110-313
Temperature/ humidity combi sensor Cable length 3 m, 1 piece						60110-314
Two temperature/ humidity combi sensors Cable length 2 x 3 m, 2 pieces						60110-315
Dual potential-free contact sensor Cable length x m, 1 piece						DPX-CC2-TR
Two temperature sensors and one temperature/ humidity combi sensor Cable length 3 x 3 m, 1 piece						DPX-T3H1
Differential pressure and temperature sensor Cable length 3 m, 1 piece						DPX-T1DP1
Airflow sensor Cable length 3 m, 1 piece						DPX-AF1
Hub to accept 4 sensors connecting cable 1 m, assembly kit, 1 piece						60110-316

Note

- Differential current measurement available on request
- Interface description, user manual, current firmware: To download please enter part number at **www.schroff.biz/oneclick/**
- For power management software see page 3.78
- Sensors (temperature, humidity, differential pressure, airflow...) and hub for connecting multiple sensors see from page 3.48

Cabinet Accessories – Power Control socket strips

Power management software

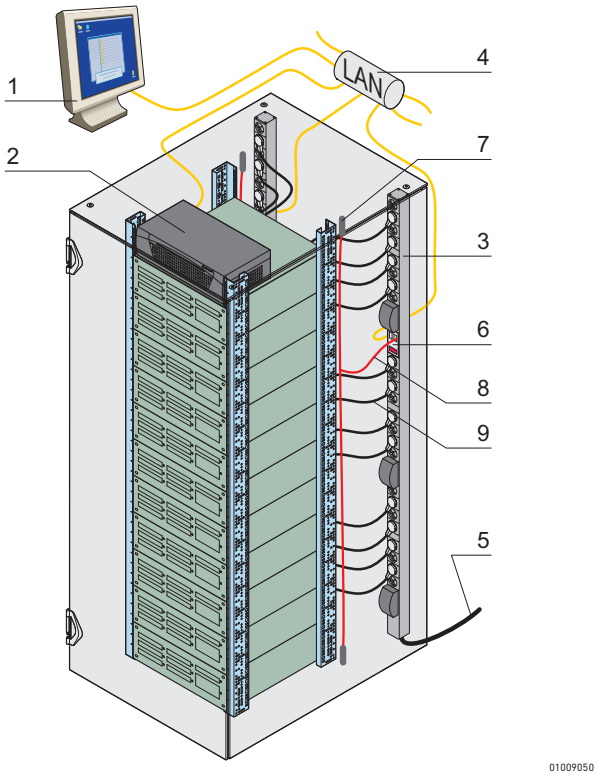

Cabling example

Item	Description
1	Real-time monitoring of web graphical user interface (GUI)
2	Existing customer server or an optionally available hardware system on which the software is installed
3	Telemonitored and remote-controlled socket strip, available with IEC C13 and C19 socket inserts
4	Linking of items 1, 2 and 3 to LAN
5	CEE power connection cable available with 230 V_{AC} (16 A or 32 A) or 400 V_{AC} (16 A and 32 A) supply
6	Local display
7	Telemonitored environmental sensors
8	Connection of sensors to socket strip
9	Mains cable, from socket strip to consumer (e.g. server)

Energy management with Power IQ®

- Centralised administration with mass configuration, firmware administration and designation of outputs
- Create energy, cost and active current reports at levels from individual plugs or IT devices through to the entire data centre
- Export graphical data
- Aggregate data from different manufacturers

Order Information

Description	Part no.
Power management software	on request

Cabinet Accessories – Power Control socket strips ServicePLUS

configuration

Components can be varied and combined freely

Simple. Fast. For the product you want.

- Configuration options
  - Various constructions (height, length)
  - Various mains supply cables
  - Single phase and multiphase
- Measurement at phase level and switch functions
- Online configuration: www.schroff.co.uk/configuration

solution

Integration and custom developments

Simple. Fast. From one source.

- Cabinet integration, complete construction incl. cabling and function test
- Customised solutions, e.g. software modifications

Cabinets 1

Wall mounted cases 2

Accessories for cabinets and wall mounted cases . 3

Climate control . 4

Electronics cases 5

Subracks/ 19" chassis 6

Front panels, plug-in units . . . 7

Systems 8

Power supply units 9

Backplanes . . . 10

Connectors, front panel component system 11

Appendix 12

19" fans

- Pusher fans
- Circulation fans
- Cooling capacity up to 2000 W

Air filtered fans

- Simple to fit - just clips in
- Protection type up to IP 55
- Airflow volume up to 770 m^3/h

Accessories

- Heaters
- Speed control
- Thermostats
- Hygrostats

36108005 (01192002, 01192009, 01194003, 01108012 00902001 00908001)

Overview 4.0

Cooling concepts 4.2

19" fan trays ... 4.4

Air filtered fans 4.20

Accessories
Heaters 4.56
Fans 4.59
Speed control 4.60
Thermostats 4.61
Hygrostats 4.64

Air/water heat exchangers 1.224

Air/water heat exchangers

- Complete cabinet solutions
- For industry and data centers
- Cooling capacities up to 40 kW

36108006 (01108004 01108002 01102004 00505033 01008020 01006040)

Climate control – Service

Products / cooling concepts

Product	Closed cabinet	Raised cover, ventilation slots	Perforated doors	19" circulation fan, top cover fan
Cooling principle	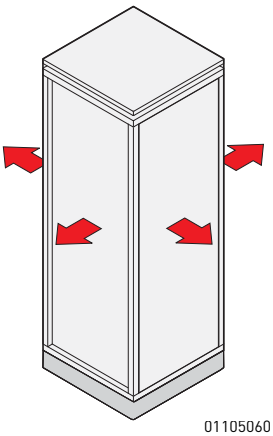 01105060	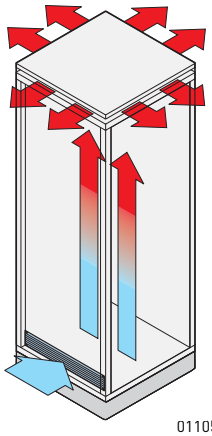 01105058	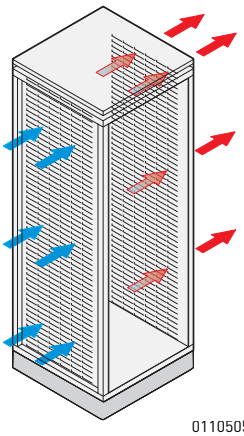 01105056	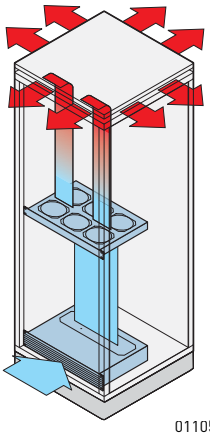 01105057
Description	Natural convection through thermal radiation	Free convection through top opening	Free convection through openings in doors/rear panels	Cooling with air
Type of protection	≤ IP 55	≤ IP 20	≤ IP 20	≤ IP 20
Noise level approx.	0	0	55 ... 65 dB(A)	34 ... 67 dB(A)
Environmental conditions	$T_i > T_a$	$T_i > T_a$	$T_i > T_a$	$T_i > T_a$
Cooling capacity approx. [1]	< 500 W	500 W ... 800 W	500 W ... 6000 W [2]	< 2000 W

1) depending on cabinet size, electronic components, location and room cooling concept
2) > 800 W are only possible with own, active cooling through components like servers, etc.
T_i = cabinet inner temperature T_a = cabinet ambient temperature

Thermal simulation

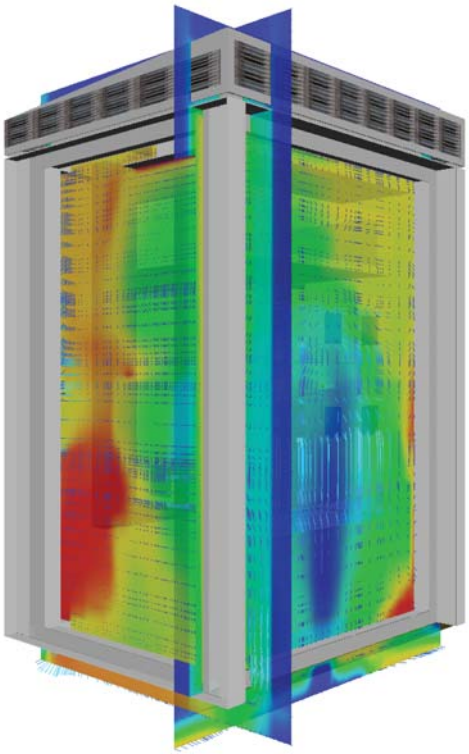

01103050

Project support through state-of-the-art simulation technology
As the packing density and integration density of components increases, the transport of waste heat rapidly becomes more difficult. Analyzing heat transport through thermal paste, flow and heat radiation makes it possible to identify hot spots as early as the design phase. We use state-of-the-art numerical analyses and simulation methods to accomplish this. This allows the analysis and optimization of cooling concepts for anything from an assembly to an entire cabinet system at the preliminary stage. Our cooling specialists would be happy to assist you in finding the right cooling concept for your project

Your advantage:
- Analyzing in detail to eliminate thermal problems at the preliminary stage
- Ensuring the high efficiency and reliability of your systems
- Reducing the number of expensive prototypes and tests
- Reducing expenses and development costs

Climate control – Service

Products/cooling concepts

Product	Air filtered fans	Air conditioners	Air/water heat exchanger (LHX 3)	Air/water heat exchanger (LHX 20/40)
Cooling principle	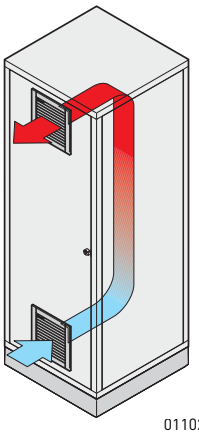 01102050	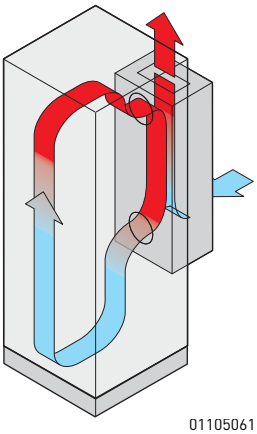 01105061	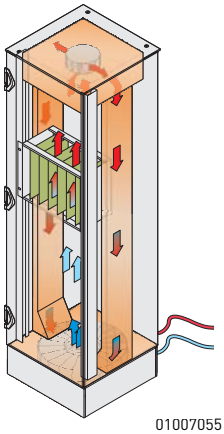 01007055	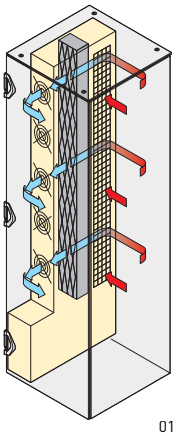 01005081
Description	Cooling with air	Cooling with coolant	Cooling with water	Cooling with water
Type of protection	⩽ IP 55	⩾ IP 55	⩾ IP 55	⩾ IP 55
Noise level	39 ... 71 dB(A)	60 ... 81 dB(A)	45.2 dB(A)	50 ... 70 dB(A)
Environmental conditions	$T_i > T_a$	$T_a \leqslant 55$ °C	$T_a \leqslant 70$ °C	$T_a \leqslant 70$ °C
Cooling capacity approx. [1]	< 1500 W	< 17000 W	< 3000 W	< 40000 W

1) depending on cabinet size, electronic components, location and room cooling concept
T_i = cabinet inner temperature T_a = cabinet ambient temperature

Optimal test equipment

01112001

Climate bay testing

Being part of the Pentair group, Schroff and McLean look back on 50 years of experience and are reknown around the world for their expertise in efficient cooling of industrial facilities and equipment.

Based on our own laboratory test chambers with the most modern equipement in Europe, America and Asia:

- Walk-in climate chamber to test and optimize completely integrated cabinets and systems under different conditions
- Smaller climate chambers to test components
- Airflow and air resistance measurements in a wind tunnel
- Noise level measurements
- Tests in accordance with DIN EN 60529 to determine the type of protection (IP)

Outstanding standard products, flexible custom solutions, global technical support and service add up to a 'cool' combination!

Content

Cabinets 1
Wall mounted cases 2
Accessories for cabinets and wall mounted cases . 3
Climate control . 4
Electronics cases 5
Subracks/ 19" chassis 6
Front panels, plug-in units . . . 7
Systems 8
Power supply units 9
Backplanes . . . 10
Connectors, front panel component system 11
Appendix 12

Climate control – 19" fan trays

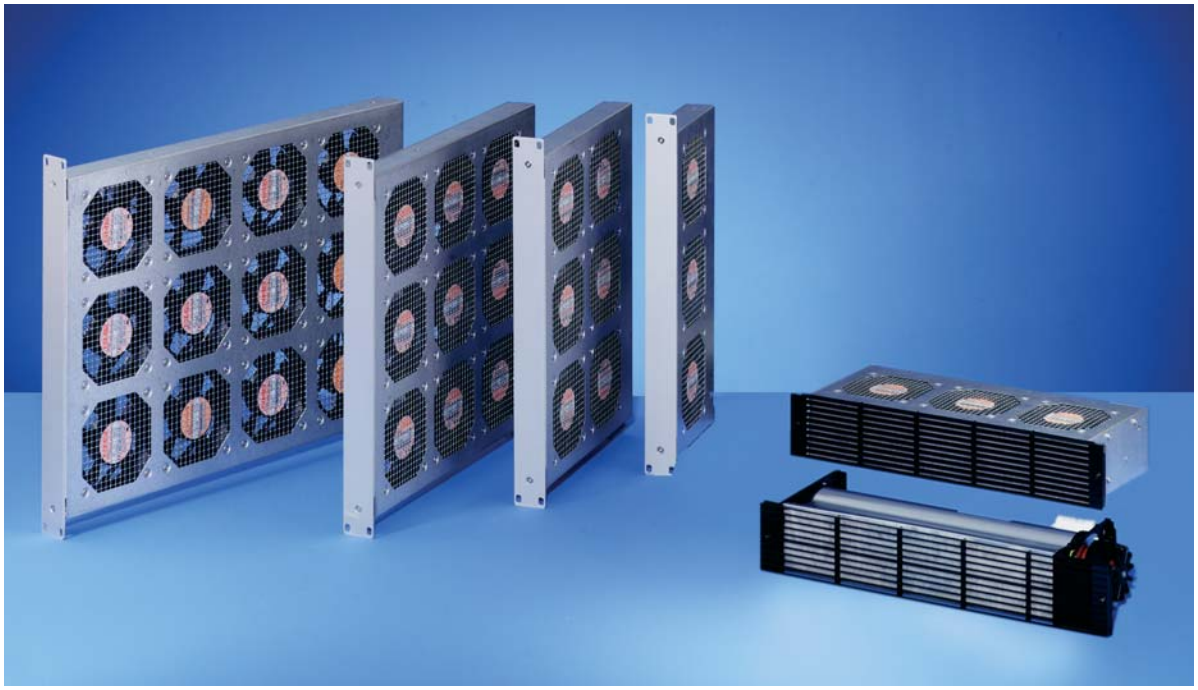

01102012

Standards/Approvals

- 19" assembly area in accordance with: IEC 60297-3-101
- Mechanical protection to DIN EN ISO 13857
  Contact protection to DIN EN ISO 13857
  Electrical safety to EN 60335 part 1
  Plastics self-extinguishing to UL 94 V0

Airflow

Vertical airflow (continual warming)

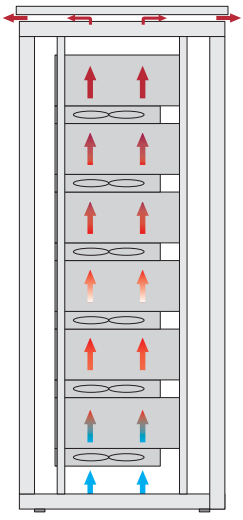

01109055

With vertical airflow the air becomes steadily warmer as it rises through the cabinet.

Diverted airflow (effective cooling)

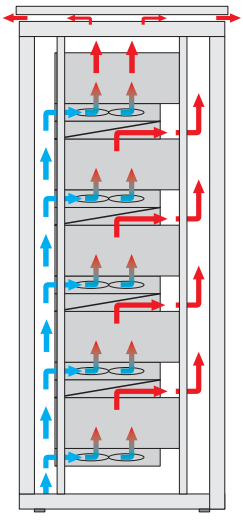

01109054

By using the 1 U airflow element, air is introduced from the front and extracted to the rear. Now all sub-assemblies receive the same cooling air.

Climate control – 19" fan trays

Overview 4.4

19" fan trays

- To cool single components and assemblies in 19" cabinets
- High airflow rate for directed heat removal
- With axial or radial fans
- For voltages 230 V_{AC}, 115 V_{AC} or 24 V_{DC}
- CE- approvals

01109002

19" fans

- 19" circulation fan, height 1 U
- 230 V_{AC}, 115 V_{AC} and 24 V_{DC}
- Up to 1000 m^3/h
- With/without mains switch or with temperature-dependent speed control

01192009

19" pusher fans

- Tangential fan, height 2 U
- 230 V_{AC} and 115 V_{AC}
- Up to 320 m^3/h

01194005

- 19" pusher fan, height 2 U
- 230 V_{AC} and 115 V_{AC}
- Up to 530 m^3/h

01102017

- 19" pusher fan, height 3 U
- 230 V_{AC} and 115 V_{AC}
- Up to 570 m^3/h
- Variable air outlet with/without pipe connection, upward or to rear

30407004

ServicePLUS from page 4.19

e.g. other airflow capacities
e.g. supply voltages
e.g. other dimensions
e.g. custom solutions

www.schroff.biz/ServicePLUS

19" fans
1 U with/without front switch 4.6
1 U speed-controlled and monitored 4.8

19" blower units
Pusher fan, 2 U with tangential blower 4.9

Pressure fan, 2 U, (160, 220 mm deep) 4.10

Pusher fan, 3 U... 4.12

ServicePLUS configuration 4.14

Accessories
19" airflow element 4.15
AC fans 4.16
DC fans 4.16

ServicePLUS... 4.19

19" fan 1 U

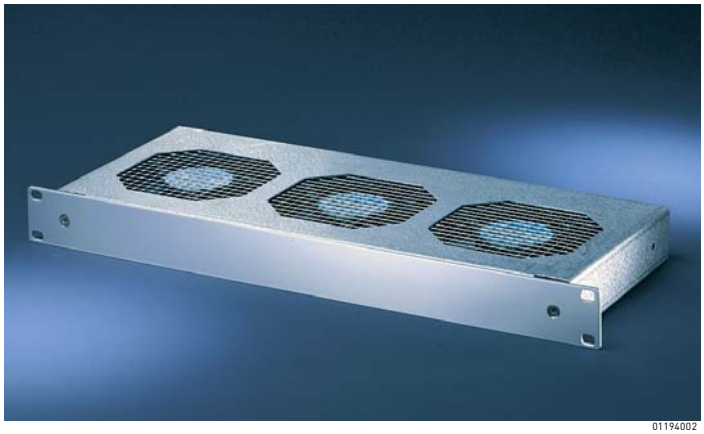

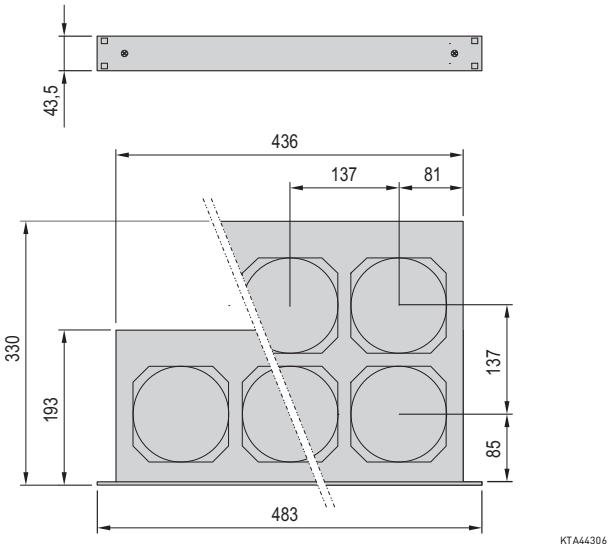

- Mechanical strain relief for mains cables
- Can be adapted to subracks
- Contact protection in accordance with DIN EN ISO 13857

CE

Delivery comprises (ready to connect)

Item	Qty	Description
1	1	19" circulation fan, 1 U, cover/base plate, St, 1 mm, finish AlZn, with perforation; front panel 1 U, Al, 3 mm, anodised
2	3 / 6	Fan, see Order Information
3a	1	AC with IEC connector (mains input IEC 60320), incl. safety clamp for mechanical strain relief
b3	1	DC version with connecting cable, cable length 2.5 m

Order Information

	24 V_{DC} Part no.	115 V_{AC} Part no.	230 V_{AC} Part no.
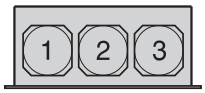 KTA44857	**10713-103**	**10713-102**	**10713-100**
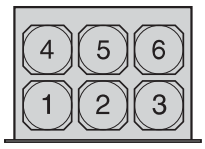 KTA44858	**10713-107**	**10713-106**	**10713-104**
Replacement fan 1 piece	**20713-240**	**20713-244**	**20713-243**
Side panel connecting bracket between europacPRO subrack and fan, including fixing material kit, PU 4 pieces			**21101-954**
Equipment cable SCHUKO/UTE SCHUKO/UTE plug, IEC 60320 C13 socket, 2.5 m, 1 piece			**60103-131**
Equipment cable, BS British Standard plug, IEC 60320 C13 socket, 2.5 m, 1 piece			**60103-137**
Equipment cable, USA USA plug, IEC 60320 socket, 2 m, 1 piece			**60103-141**

ServicePLUS see page 4.19

Technical data

Voltage	230 V_{AC}		115 V_{AC}		24 VC_{DC}
Frequency in Hz	50	60	50	60	-
Number of fans	3/6		3/6		3/6
Airflow volume in m^3/h (3/6 fans)	440/845	520/1000	440/845	520/1000	506/970
Noise level in dB(A) (3/6 fans)	56.5/59.4	60.2/62.9	56.5/59.4	60.2/62.9	60.5/63.3
Power consumption in W (3/6 fans)	45/90	42/84	46.5/93	43.5/87	24/48
Max. stat. pressure in Pa	73	88	73	88	68
Permissible ambient temperature in °C	–40 ... +70 °C				
Lifespan in h L_{10}40 °C	43500				
Lifespan in h L_{10}55 °C	20000				

Note

- Fan dimensioning see page 4.18
- Replacement fans see chapter Climate control - Accessories
- Versions with multiple fans see ServicePLUS configuration page 4.14

Climate control – 19" fan trays

19" fan 1 U with front switch

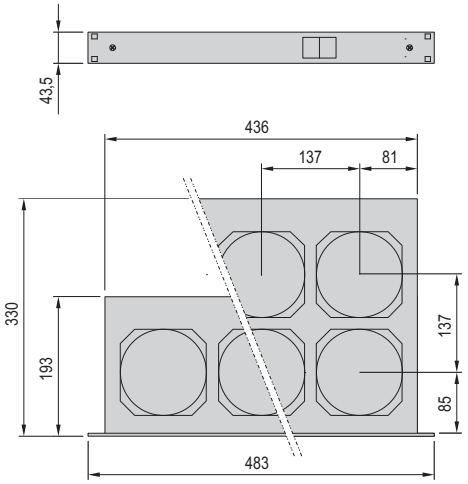

- Front-mounted illuminated mains switch on AC devices, coupled with additional rear mains outlet; mechanical strain relief for mains input and mains output cables
- Can be adapted to subracks
- Contact protection in accordance with DIN EN ISO 13857

CE

Delivery comprises (ready to connect)

Item	Qty	Description
1	1	19" circulation fan, 1 U, top/base plate, St, 1 mm, finish AlZn, with perforation; front panel 1 U, Al, 3 mm, anodised
2	3 / 6	Fan, see Order Information
3a	1	AC version with mains switch, illuminated green; plug (mains input IEC 60320) incl. safety clamp for mechanical strain relief; coupled mains output socket (IEC 60320)
b3	1	DC version with mains switch and connecting cable, cable length 2.5 m

Order Information

	24 V_{DC} Part no.	115 V_{AC} Part no.	230 V_{AC} Part no.
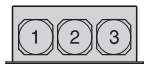 KTA44857	**10713-111**	**10713-110**	**10713-108**
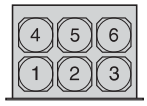 KTA44858	**10713-115**	**10713-114**	**10713-112**
Replacement fan 1 piece	**20713-240**	**20713-244**	**20713-243**
Side panel connecting bracket between europacPRO subrack and fan, including fixing material kit, PU 4 pieces			**21101-954**
Equipment cable SCHUKO/UTE SCHUKO/UTE plug, IEC 60320 C13 socket, 2.5 m, 1 piece			**60103-131**
Equipment cable, BS British Standard plug, IEC 60320 C13 socket, 2.5 m, 1 piece			**60103-137**
Equipment cable, USA USA plug, IEC 60320 socket, 2 m, 1 piece			**60103-141**
Mains cable, IEC IEC 60320 C14 plug, IEC 60320 C13 socket, 2.5 m, 1 piece			**60197-053**

ServicePLUS see page 4.19

Technical data

Voltage	230 VAC		115 VAC		24 VDC
Frequency in Hz	50	60	50	60	-
Number of fans	3/6		3/6		3/6
Airflow volume in m^3/h (3/6 fans)	440/845	520/1000	440/845	520/1000	506/970
Noise level in dB(A) (3/6 fans)	56.5/59.4	60.2/62.9	56.5/59.4	60.2/62.9	60.5/63.3
Power consumption in W (3/6 fans)	45/90	42/84	46.5/93	43.5/87	24/48
Max. stat. pressure in Pa	73	88	73	88	68
Permissible ambient temperature in °C	–40 ... +70 °C				
Lifespan in h L_{10}40 °C	43500				
Lifespan in h L_{10}55 °C	20000				

- Fan dimensioning, see page 4.18
- Replacement fans, see chapter Climate control - Accessories
- Versions with multiple fans see ServicePLUS configuration page 4.14

19" fan 1 U, with speed control and function monitoring

01198001

Photo shows 19" fan unit with 3 fans, without switch

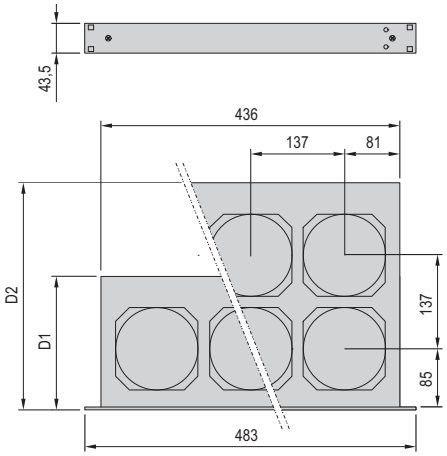

01107050

Airflow capacity with one fan

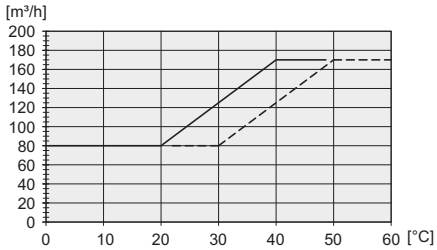

01112050

Monitoring signal

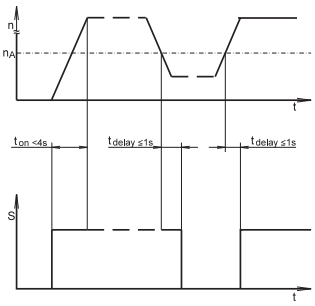

kta43400

n = rotating speed, S = signal, n_A = speed threshold value "Alarm"

ServicePLUS see page 4.19

- Low noise through temperature dependent airflow volume
- Range selectable: 20 ... 40 °C and 30 ... 50 °C
- External sensor, at sensor breakage max speed will be set automatically
- Function control with LEDs and via potential-free contact
- Contact protection in accordance with DIN EN ISO 13857
- 2 versions, 24 V_{DC} or 230 V_{AC}

CE

Delivery comprises (ready for connection)

Item	Qty	Description
1	1	19" circulation fan, 1 U; cover/base plate, St, 1 mm, finish Al-Zn, with perforation front panel 1 U, Al, 3 mm, anodised
2	3 / 6	DC fan, see Order information
3	1	Connecting cable, length 2.5 m, open-ended
4	1	Temperature sensor for speed control, NTC resistor, cable length 1.5 m

Order Information

	24 V_{DC}		230 V_{AC}		
	D mm	Without switch Part No.	D mm	With switch Part No.	Without switch Part No.
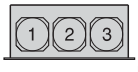 D1 KTA44857	193	**10713-099**	250	19713-121	–
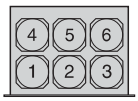 D2 KTA44858	330	**10713-098**	397	–	**19713-006**

Accessories	
Filter mat, class G 2 for 3 fans, PU 3 pieces	**60713-169**
Filter mat, class G 2 for 6 fans, PU 3 pieces	**60713-170**

Technical data

Voltage AC version (fans 24 V_{DC}) / Voltage DC version	86 ... 260 V_{AC} / 24 V_{DC} (21 ... 27)	
Number of fans	3	6
Max. airflow volume in m^3/h	467	895
Noise level in dB(A)	63.5	66.4
Max. stat. pressure in Pa	70	70
Power consumption in W	15.9	31.8 W
Permissible ambient temperature °C	–20 ... +65 °C	
Life in h L_{10}40 °C	70000	

Technical data Regulation/monitoring

Control range	Changeover switch between 20 ... 40 °C and 30 ... 50 °C
Sensor	External NTC resistor, cable length 1.5 m
Sensor connector	Rear-mounted plug contact, max. rotation speed in case of sensor breakage
Signal at	Speed < 30 % nominal speed; switch-on delay < 4 s, signal delay < 1 s (see monitoring signal)
Signalling	Display via LEDs; potential-free contact (changeover), switching capacity 5 W, max. switching voltage 170 V, open collector on request

■ Fan dimensioning see page 4.18

Climate control – 19" fan trays

Pusher fan, 2 U, with tangential fan

01192009

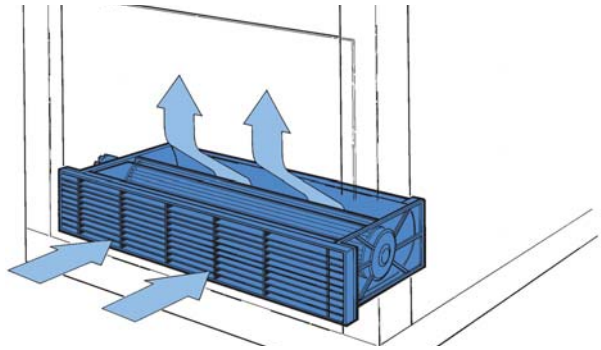

A3532

- High airflow volume
- Integrated filter mat
- 2 versions:
  - LE1: 19" bolt-on dimension, fan unit is wider than 19"
  - LE2: 19" reduced width, for easy assembly

Delivery comprises (ready to connect)

Item	Qty	Description
1	1	Blower unit 2 U, with grille, PA 6.6, UL 94 V-0, front grille 2 U, PPO, UL 94 V-0; filter mat, synthetic fibre, filter class G 2
2	1	Fan
3	1	Terminal block

Order Information

Description	115 V_{AC} Part no.	230 V_{AC} Part no.
LE1: Pusher fan 2 U, tangential blower	**60713-003**	**60713-001**
LE2: Pusher fan 2 U, tangential blower	**60713-004**	**60713-002**
Spare filter mat PU 10 pieces		**20705-008**

Dimensions

Voltage	115 V_{AC}		230 V_{AC}	
Frequency in Hz	50	60	50	60
Airflow volume in m^3/h	320	330	320	330
Noise level in dB(A)	59	62	59	62
Max. stat. pressure in Pa	65	70	65	70
Power consumption in W	30	40	37	46
Permissible ambient temperature in °C	–20 ... +65 °C			
Lifespan in h	30000			

Note

- 24 V_{DC} on request
- Fan dimensioning, see page 4.18

LE 1

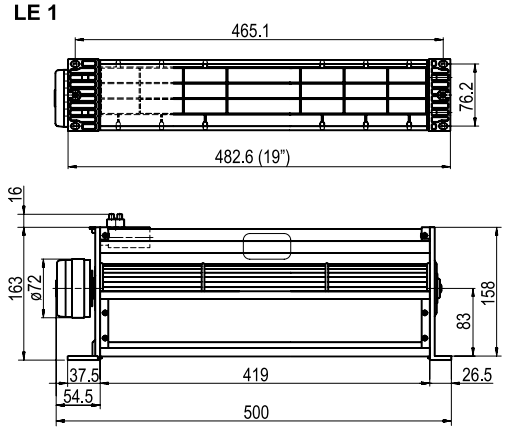

LE 2

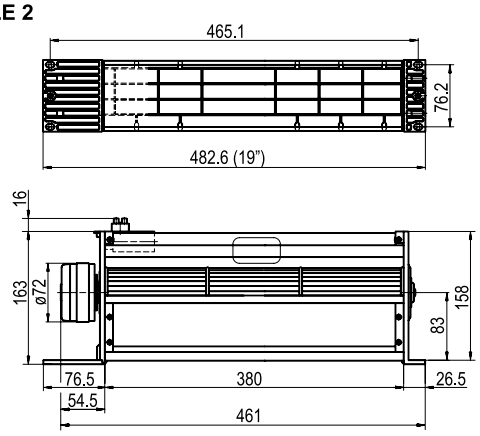

01103056

ServicePLUS see page 4.19

Climate control – 19" fan trays

19" pusher fan 2 U
(depth 160 mm or 220 mm)

01194005

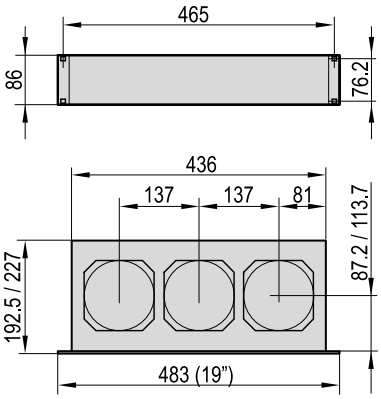

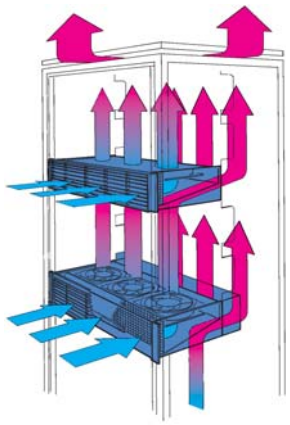

01103054A3527V

- Integrated air deflector prevents heat buildup in the assemblies mounted below
- Optionally with rear additional fan, 2 U, for active cooling of assemblies beneath the pusher fan
- Can be adapted to subracks
- Contact protection in accordance with DIN EN ISO 13857

CE

Delivery comprises (ready to connect)

Item	Qty	Description
1	1	19" pusher fan 2 U, case, St, 1 mm, finish Al-Zn; front grille 2 U, PPO, UL 94 V-0 Filter mat, synthetic fibre, filter class G 2
2	3	Fan
3a	1	AC-version with plug (mains input, IEC 60320), incl. safety clamp, mechanical strain relief for mains input cable; socket to connect an optional supplementary fan
3b	1	Wide AC input range with DC fans, version as 3 a, additionally speed-controlled and monitored
3c	1	DC version with connecting cable, cable length 2.5 m

Note

- Supplementary fan for AC version see page 4.11
- Fan dimensioning, see page 4.18

ServicePLUS see page 4.19

Order Information

Description	Front panel Al, anodised 86 ... 260 V_{AC} (fan 24 V_{DC}) 515 m^3/h Part no.	Front panel, plastic, black 24 V_{DC} 515 m^3/h Part no.	115 V_{AC} 300/330 m^3/h Part no.	115 V_{AC} 445/530 m^3/h Part no.	230 V_{AC} 300/330 m^3/h Part no.	230 V_{AC} 445/530 m^3/h Part no.
For board depth 160 mm	19713-540	**10713-537**	10713-520	**10713-536**	**10713-518**	**10713-534**
For board depth 220 mm	–	**10713-529**	–	–	–	**10713-526**
Replacement fan piece	**20713-240**	**20713-240**	**20713-147**	**20713-244**	**20700-001**	**20713-243**
Equipment cable SCHUKO/UTE SCHUKO/UTE plug, IEC 60320 C13 socket, 2.5 m, 1 piece						**60103-131**
Equipment cable BS British Standard plug, IEC 60320 C13 socket, 2.5 m, 1 piece						**60103-137**
Equipment cable USA USA plug, IEC 60320 socket, 2 m, 1 piece						**60103-141**
Side panel connecting bracket between europac subrack, including fixing material kit						**21101-104**
Side panel connecting bracket between europacPRO subrack and fan, including fixing material kit, PU 4 pieces						**21101-954**
Spare filter mat PU 3 pieces						**60713-501**

Technical data with 3 fans

Voltage	24 V_{DC}	24 V_{DC}	115 V_{AC}				230 V_{AC}			
Frequency in MHz	-	-	50	60	50	60	50	60	50	60
Airflow volume in m^3/h	515	515	300	330	445	530	300	330	445	530
Noise level in dB(A)	59.8	59.8	52.2	56.1	55.2	58.2	52.2	56.1	55.2	58.5
Max. stat. pressure in Pa	68	68	41	41	78	88	41	41	78	88
Power consumption in W	24	24	42	33	46.5	43.5	42	33	45	42
Permissible ambient temperature in °C	–20 ... +70 °C	–20 ... +70 °C	–40 ... +70 °C				–40 ... +70 °C			
Life in h, [1] at 40 °C, [2] at 55 °C	20000 [2]	20000 [2]	50000 [1]		20000 [2]		50000 [1]		20000 [2]	

Climate control – 19" fan trays

Supplementary fans with housing for pusher fan 2 U

01194006

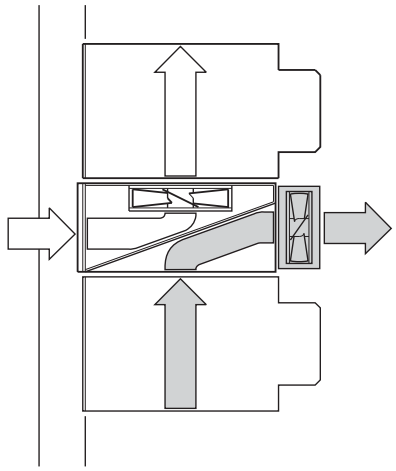

KTA44447

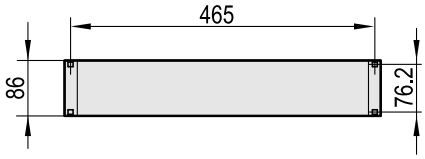

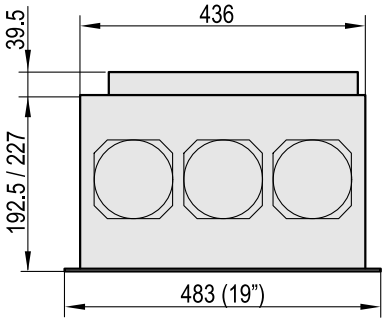

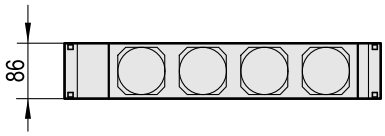

01103055

- Extra 2 U useable space:
  By using a built-on fan, components mounted below the 19" pusher fan can be cooled
- No additional voltage supply necessary: connection is via 19" pusher fan, 2 U
- Contact protection in accordance with DIN EN ISO 13857

CE

Delivery comprises (ready to fit and connect)

Item	Qty	Description
1	1	Housing with grille, St, 1 mm, finish AlZn
2	4	Fan
3	1	Cable with plug (electrical connection via socket on 19" blower fan); safety clamp (mechanical strain relief for mains input cable)

Order Information

Description	115 V_{AC} Part no.	230 V_{AC} Part no.
Supplementary fans with housing for pusher fan 2 U	10713-532	**10713-530**

Technical data with 3 fans

Voltage	115 VAC		230 VAC	
Frequency in MHz	50	60	50	60
Airflow volume in m^3/h	130	155	130	155
Noise level in dB(A)	51	54	51	54
Max. stat. pressure in Pa	44	62	44	62
Permissible ambient temperature in °C	-40 ... +70		-40 ... +70	
Power consumption in W	30	24	27	21
Life in h at 55 °C	20000		20000	

Note

- 24 V_{DC} version available on request
- Fan dimensioning see page 4.18

ServicePLUS see page 4.19

19" pusher fan 3 U

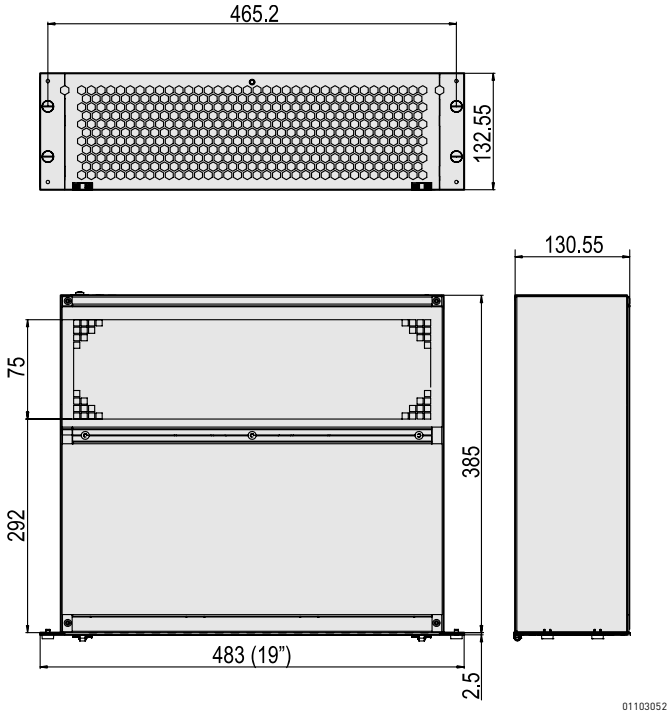

ServicePLUS see page 4.19

With cover plates, this pusher fan can be re-fitted to different cooling concepts

- Ventilation directed accurately to the electronics
- Air infeed from front, air exits at the top rear of cabinet (guided upwards by cover plates or via hoses to rear and upwards)
- Contact protection in accordance with DIN EN ISO 13857

CE

Delivery comprises (ready for connection)

Item	Qty	Description
1	1	Case, St, 1 mm, AlZn; perforated hinged front panel, Al, 2.5 mm; filter mat, synthetic fibre, filter class G 2 in accordance with DIN EN 779
2	1	Radial fan with mains fuse
3	1	Plug (mains input, IEC 60320); safety clamp, mechanical strain relief for mains input cable

Order Information

Description	115 V_{AC} Part no.	230 V_{AC} Part no.
19" pusher fan 3 U	**10713-547**	**10713-546**
Accessories		
Equipment cable SCHUKO/UTE SCHUKO/UTE plug, IEC 60320 C13 socket, 2.5 m, 1 piece		**60103-131**
Equipment cable, BS British Standard plug, IEC 60320 C13 socket, 2.5 m, 1 piece		**60103-137**
Equipment cable, USA USA plug, IEC 60320 socket, 2 m, 1 piece		**60103-141**
Side panel connecting bracket between europac subrack and fan, including fixing material kit, PU 4 pieces		**21101-958**
Side panel connecting bracket between europacPRO subrack and fan, including fixing material kit, PU 4 pieces		**21101-954**
Spare filter mat PU 3 pieces		**60713-868**

Technical data

Voltage	115 VAC		230 VAC	
Frequency in MHz	50	60	50	60
Airflow volume in m^3/h	510	570	510	570
Noise level per fan in dB(A)	62	64	62	64
Max. stat. pressure in Pa	320	410	320	410
Power consumption in W	55	65	58	75
Max. ambient temperatures in °C	-20 ... +50		-20 ... +50	
Life in h at 55 °C	20000		20000	

Note

- Wide input voltage range 90 V ... 260 V_{AC} available on request
- Temperature control and function monitoring (alarm via RS 232) on request
- Air deflector plates for other cooling concepts see page 4.13
- Fan dimensioning see page 4.18

Climate control – 19" fan trays

Air deflector plate for 19" pusher fan 3 U

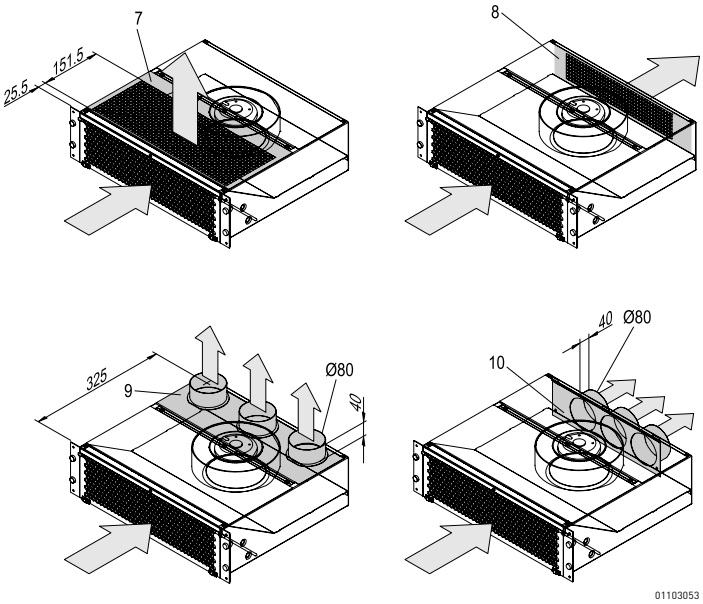

- For 19" pusher fan 3 U

Order Information

Item	Description	Qty/PU	Part no.
7	Air deflector plate to front, St, 1 mm, finish AlZn	1	20713-504
8	Air outlet to rear: upper cover plate, without perforation, 1 mm, finish AlZn	1	20713-505
9	Air deflector plate with hose connection on upper rear, external diameter 80 mm, St, 1 mm, finish AlZn	1	20713-503
10	Air deflector plate with hose connection to rear, external diameter 80 mm, St, 1 mm, finish AlZn	1	20713-502

ServicePLUS see page 4.19

Connecting cable with connector socket

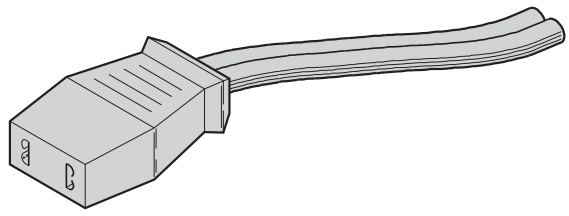

- Connecting cable with connector for AC fans (25 mm and 38 mm height) and DC fans (38 mm height), cable length 1 m

Delivery comprises

Item	Qty	Description
1	1	Cable, PVC (2 x 0.75 mm²), 1 m long, with 2 FASTON connectors 2.8 x 0.5 mm, DIN 46343 T1

Order Information

Description	Part no.
Connecting cable with plug	**21101-246**

Climate control – 19" fan trays

ServicePLUS: Configuration with assembly

- You can plan and build up your product yourself using the order information table below
- Dimensions of fan trays
  - Height 1 U
  - Width 19"
  - Depth 193, 300, 467, 604 mm for 3, 6, 9 or 12 fans
- Create your 19" fan trays from individual parts (assembled within 10 working days)

Example configuration

Qty	Description	Order no.
1	Housing, 1 piece	20713-213
1	Front panel with switch, AC, 1 piece	20713-231/05
1	Filter mat, 1 piece	60713-246/05
6	Fan, AC, height 25 mm; mounted at position 1, 3, 5, 7, 9, 11	20700-001/05

Order Information

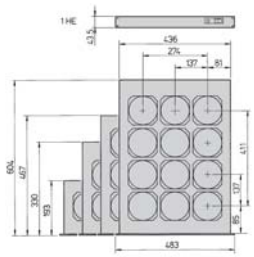

	Fan height	Fan housing 1)	Front panel without switch		Front panel with switch		Filter mat G 2	Fans
			AC (230 V)	DC	AC (230 V)	DC		
		cover/base plate, St, 1 mm, finish AlZn, with perforation	1 U, Al, 3 mm, anodised; includes cable harness	1 U, Al, 3 mm, anodised; connecting cable, 2.5 m; includes cable harness	1 U, Al, 3 mm, anodised; mains switch, illuminated green; includes cable harness	1 U, Al, 3 mm, anodised; mains switch, illuminated green; connecting cable, 2.5 m; includes cable harness	can only be fitted where fan height is 25 mm	
a44537	mm	1 piece	1 piece	1 piece	1 piece	1 piece	PU 3 pieces	see page
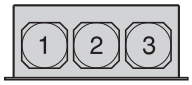 KTA44857	25	20713-212	20713-220/05	20713-224/05	20713-228/05	20713-236/05	**60713-243**	4.16
	38	20713-216	20713-220/05	20713-224/05	20713-228/05	20713-236/05	–	4.16
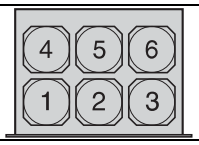 KTA44858	25	20713-213	20713-221/05	20713-225/05	20713-229/05	20713-237/05	**60713-244**	4.16
	38	20713-217	20713-221/05	20713-225/05	20713-229/05	20713-237/05	–	4.16
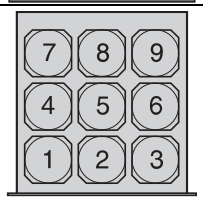 kta44859	25	20713-214	20713-222/05	20713-226/05	20713-230/05	20713-238/05	**60713-245**	4.16
	38	20713-218	20713-222/05	20713-226/05	20713-230/05	20713-238/05	–	4.16
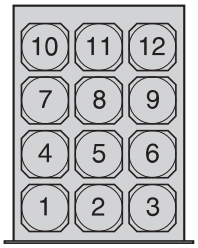 kta44860	25	20713-215	20713-223/05	20713-227/05	20713-231/05	20713-239/05	**60713-246**	4.16
	38	20713-219	20713-223/05	20713-227/05	20713-231/05	20713-239/05	–	4.16

1) Fan housing cannot be ordered without fans

Note

- Unused fan mounting positions are covered with foam material
- Versions for 115 V or with switch available on request
- Fan dimensioning see page 4.18

Climate control – 19" fan trays

1 U air deflector chassis for 19" fan trays

1 U air deflector chassis (bottom) with 1 U fan tray (top)

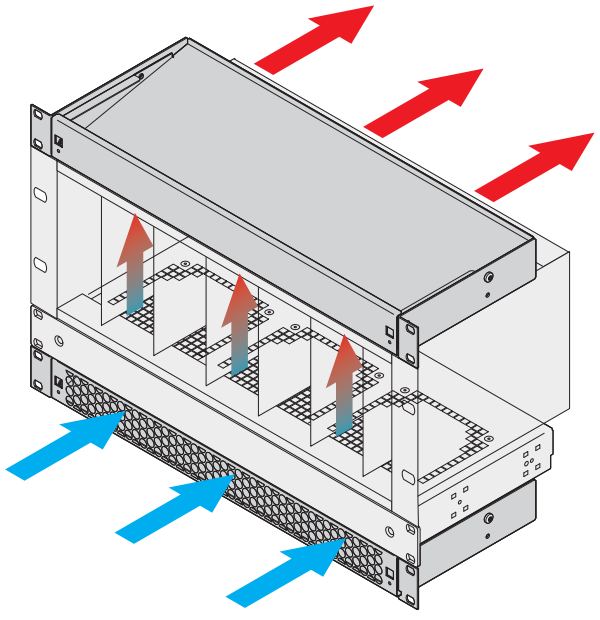

Application: air deflector chassis mounted below 19" fan tray, guides the cool air upwards from front; second air deflector chassis at top guides the warm air to the rear

- Optimised cooling together with 19" fan trays
- Vertical buildup of heat is avoided by means of improved airflow
- Fitting options:
  - One fan tray: cool air is drawn in from the front and guided upwards
  - Two fan trays: cool air is drawn in from the front, directed upwards and guided to the rear (see application diagram)
- Versions:
  - With solid front panel to direct airflow
  - With perforated front panel to allow air to flow in/out
- Optional filter mat, simple to swap during operation

NEW

Delivery comprises (assembled)

Item	Qty	Description
1	1	Air deflector plate, St, 1 mm, finish Zincor, width 432.8 mm (without side panel)
2	2	Side panel, St, 1.5 mm, finish Zincor; with 19" mounting bracket, powder-coated (see Order information for colour)
3a	1	Front panel, perforated, St, 1.5 mm, finish Zincor, powder-coated (see Order information for colour); two quick-release fasteners, black
3b	1	Front panel, solid, St, 1.5 mm, finish Zincor, powder-coated (see Order information for colour); two quick-release fasteners, black
4	1	Assembly kit

Order Information

1 U air deflector chassis for 19" fan trays	Depth mm	Colour	Part no. Front panel, perforated	Part no. Front panel, solid
for single-row fan trays (3 fans)	193	RAL 7035	10713-140	10713-146
	193	RAL 9005	10713-142	10713-148
	193	RAL 9006	10713-144	10713-150
for double-row fan trays (6 fans)	330	RAL 7035	10713-141	10713-147
	330	RAL 9005	10713-143	10713-149
	330	RAL 9006	10713-145	10713-151
Accessories				
Filter mat, class G 2 for 3 fans, PU 3 pieces				**60713-169**
Filter mat, class G 2 for 6 fans, PU 3 pieces				60713-331

AC fans/replacement fans

Delivery comprises

Item	Qty	Description
1	1	Fan (width 119 mm, depth 119 mm)

Order Information

Description	Height mm	Airflow volume m^3/h	115 V_{AC} Part no.	230 V_{AC} Part no.
Type A	25	84	**20713-146**	**20713-142**
Type B	25	108	**20713-147**	**20700-001**
Type C	38	162	**20713-244**	**20713-243**
Assembly kit for fan PU 1 kit				**21102-013**

Dimensions AC fans

Type	Type A		Type B		Type C	
Frequency in Hz	50	60	50	60	50	60
Airflow volume in m^3/h	84	90	108	120	162	192
Noise level per fan in dB(A)	29	30	34	38	37	41
Max. static pressure in Pa	23	21	41	41	73	88
Max. ambient temperature in °C	70	70	70	70	70	70
Power consumption in W	8	7	14	11	15	14
Dimensions: height in mm (width 119 mm × depth 119 mm)	25		25		38	

- Please order connecting cable separately, see page 4.13
- Please order protective grille separately, see page 4.17

DC fans/replacement fans

Delivery comprises

Item	Qty	Description
1a	1	Fan, height 38 mm, with plug connection
1b	1	Fan, height 25.5 mm, connecting cable, length 55 mm, connector with 2 x FASTON connectors (2.8 x 0.8 mm)

Order Information

Height mm	Airflow volume m^3/h	Power consumption W	Input voltage V	Part no.
25.5	171	5.3	24	**20713-172**
38	184	8	12	**20713-241**
38	184	8	24	**20713-240**
38	184	8	48	20713-242
Assembly kit for fan PU 1 kit				**21102-013**

Technical data DC fans

Voltage in VDC	24	12	24	48
Dimensions: height in mm (width 119 mm × depth 119 mm)	25	38	38	38
Airflow volume in m^3/h	171	184	184	184
Noise level per fan in dB(A)	41.5	42	42	42
Max. stat. pressure in Pa	50.5	68	68	68
Max. ambient temperature in °C	70	70	70	70
Power consumption in W	7	8	8	8

- Please order connecting cable for 38 mm high fans separately, see page 4.13
- Please order protective grille separately, see page 4.17

Climate control – 19" fan trays

Protective grille to snap-in

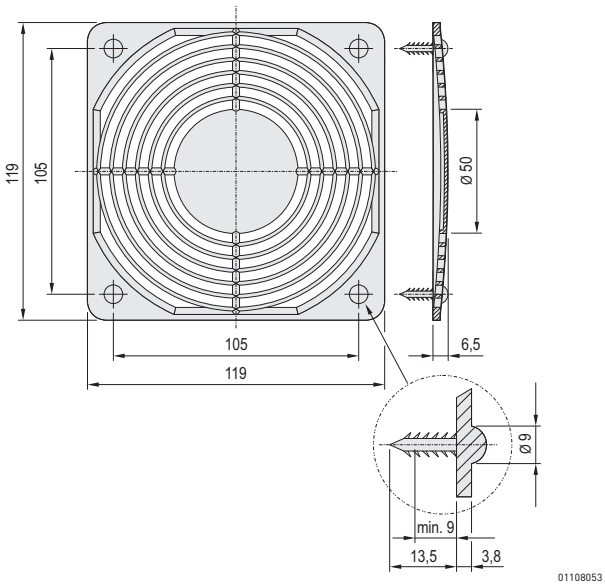

- Protective grille for direct mounting on AC and DC fans

Delivery comprises

Item	Qty	Description
1	1	Fibre glass reinforced plastic (PA), black, in accordance with DIN 31001, UL 94 V-0

Order Information

Description	Part no.
Protective grille, plastic, to snap-in	**60225-052**

Protective grille, plastic, to screw-on

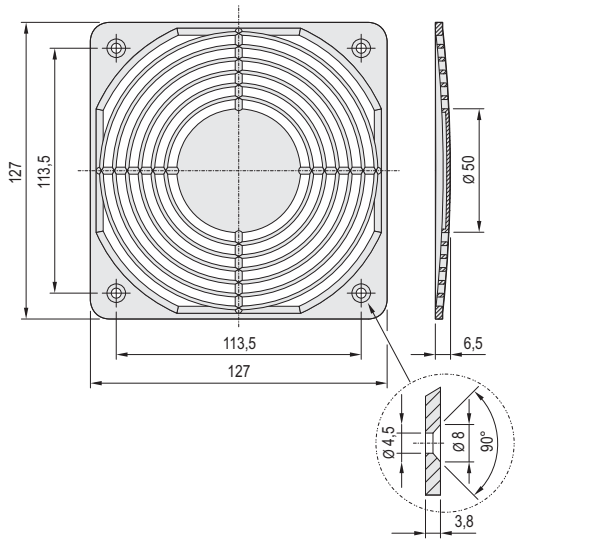

- Protective grille for AC and DC fans
- Grille may be mounted on a front panel or the wall of the housing

Delivery comprises

Item	Qty	Description
1	1	Fibre glass reinforced plastic (PA), black, in accordance with DIN 31001, UL 94 V-0

Order Information

Description	Part no.
Protective grille, plastic, to screw-on	**60225-053**
Assembly kit for plastic grille (4 screws, 4 washers, 4 nuts M4), PU 1 set	**21102-014**

Protective grille, metal, to screw-on

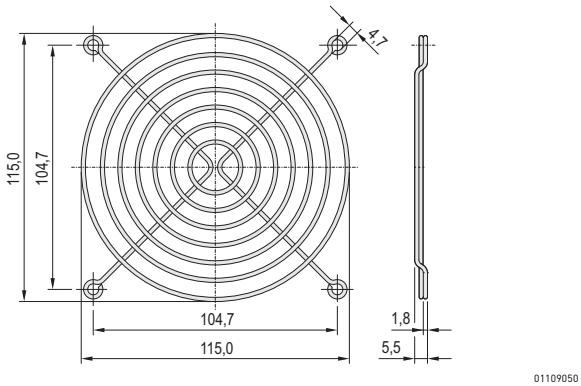

- Protective grille for direct mounting on AC and DC fans
- Optimised noise level and air resistance

Delivery comprises

Item	Qty	Description
1	1	St, 1 mm

Order Information

Description	Part no.
Protective grille, metal, to screw-on	**60197-019**
Assembly kit for metal grille (4 screws, 4 washers, 4 nuts M4), PU 1 set	**21102-015**

Climate control – 19" fan trays

19" fan dimensioning

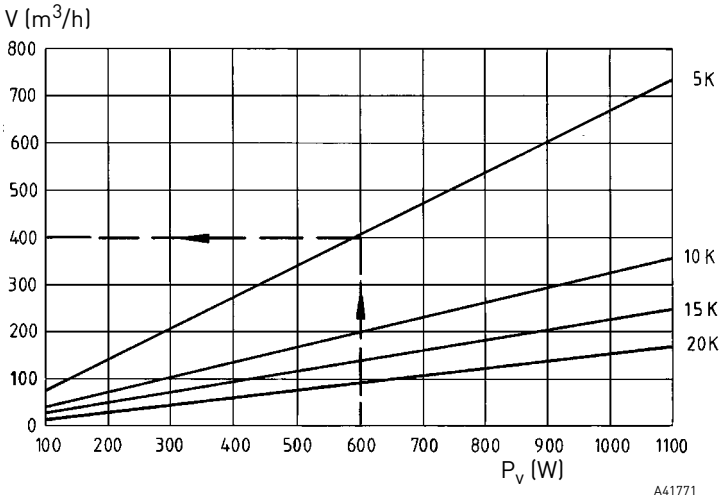

For local heat dissipation, the airflow volume required to expel the heat produced is calculated.

Note
The cabinet ventilation is not taken into account here.
The required airflow volume is calculated as follows:

$V = (f \times P_V)/\Delta T$

The air constant f = 3.3 m^3K/Wh.
ΔT is the temperature difference between the ambient temperature of the sub-assembly and that of the air drawn in.

Example of readings
- Pv = 600 W
- air sucked in: 25 °C
- permissible ambient temperature of the sub-assembly = 30 °C

1. $\Delta T = T_i - T_u$ = 30 °C – 25 °C = 5 K
2. From P_v = 600 W to the curve for ΔT =5 K
3. From the intersection point to the airflow volume V = 400 m^3/h

Climate control – 19" fan trays ServicePLUS

assembly

Assembled by professionals. Double benefit!

Fitting of all mechanical, electrical and electronic components by our specialists

- No additional charge
- Ready for dispatch within 10 working days

modification

Small changes. Large impact.

Custom drillings, cut-outs and special colours for off-the-shelf products

- Download CAD data, send modifications to us
- Ready for dispatch within 15 working days

Content

Cabinets 1

Wall mounted cases 2

Accessories for cabinets and wall mounted cases . 3

Climate control . 4

Electronics cases 5

Subracks/ 19" chassis 6

Front panels, plug-in units . . . 7

Systems 8

Power supply units 9

Backplanes . . . 10

Connectors, front panel component system 11

Appendix 12

Climate control – Air filtered fan

01105012

01108014

Simple to fit without tools by clipping in (can also be bolted)

01108015

Easy tool-less change of filter mat

01108016

Fluted filter to increase degree of ingress protection from IP 54 to IP 55

01108013

Easy tool-less wiring with spring clamp connector

Climate control – Air filtered fan

Overview 4.20

Air filtered fans, ingress protection from IP 54 to IP 55 in accordance with IEC 60529

- Simple to fit without tools by clipping in (can also be bolted)
- Easy conversion from pressure to suction operation
- Easy tool-less change of filter mat
- 7 performance classes with 6 different assembly dimensions

01108017

Air filtered fans

01108026

Outlet/inlet filters

01108016

Fluted filters

Air filtered fans

- Airflow capacity of 25 m^3/h ... 770 m^3/h (FL 100 ... FL 600)
- 3 supply voltages (230 V_{AC}, 115 V_{AC}, 24 V_{DC})
- Outlet/inlet filter
- Fluted filter to increase degree of ingress protection from IP 54 to IP 55
- Side by side mounting of several air filtered fans is possible

30407004

ServicePLUS

e.g. special colours
e.g. other cabinet dimensions
e.g. EMC solutions
e.g. custom solutions

www.schroff.biz/ServicePLUS

How to dimension air filtered fans . . 4.22
Reading example . 4.22
EMC solutions . . . 4.22

Air filtered fans
FL 100 . . . . . 4.23
FL 200 . . . . . 4.24
FL 225 . . . . . 4.25
FL 250 . . . . . 4.26
FL 300 . . . . . 4.27
FL 500 . . . . . 4.28
FL 600 . . . . . 4.29

Air filtered fan calculations

01108017

To establish the size of the air-filtered fan required, calculate the air throughput necessary to dissipate the amount of heat contained in the cabinet.
The necessary airflow volume (at sea level) is calculated thus:

$V = f \times (P_V - P_S) / \Delta T$ with

V = airflow volume
f = air constant = 3.3 m³ K/Wh
P_V = thermal power loss
(sum of heat emitted by the equipment in the cabinet)
P_S = radiant power
(heat that is radiated from the cabinet without additional ventilation)
ΔT = temperature difference between the air drawn in (ambient temperature T_u) and the exhaust air (internal cabinet temperature T_i), $\Delta T = T_i - T_u$

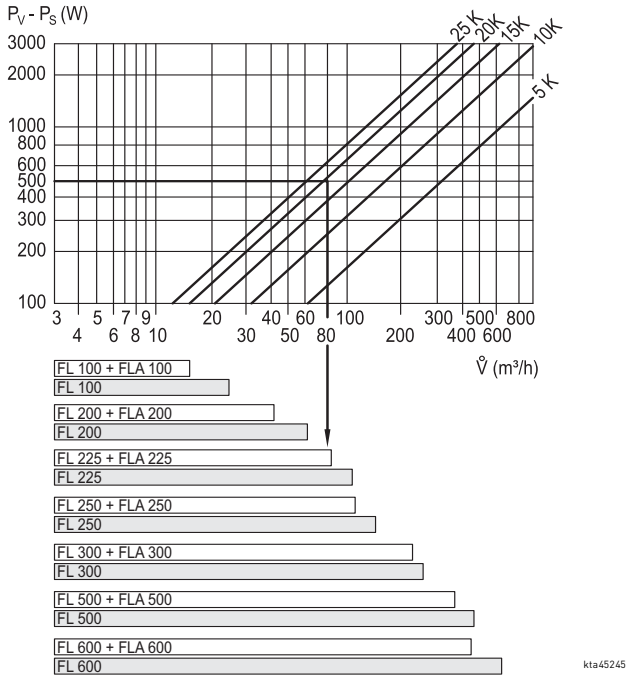

kta45245

Reading example

The devices in the cabinet produce e.g. a power loss of 840 W. Of these 840 W, the cabinet releases 340 W to the environment via its surfaces. The air sucked in from outside the cabinet has a temperature of 20 °C.
A maximum temperature of 40 °C is to be permitted in the cabinet.

So which air filtered fan should be employed?

1. P_V = 840 W, P_S = 340 W, read-off point P_V - P_S = 500 W
2. $\Delta T = T_i - T_a$ = 40 °C - 20 °C = 20 °C = 20 K
3. On the characteristic for 20 K we obtain, at P_V - P_S = 500 W, a minimum necessary airflow volume of V = 80 m³/h.
4. An FL 250 air filtered fan should be used that gives an airflow volume of 131 m³/h or, if used in combination with the FLA 250 exhaust filter, of 95 m³/h.

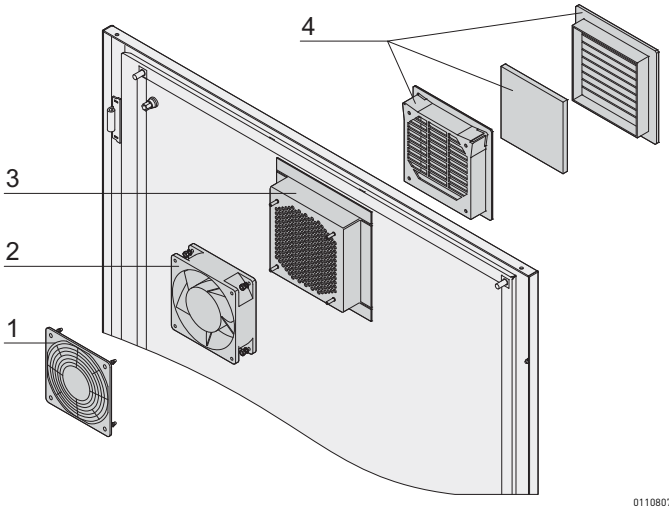

01108070

EMC solutions

- EMC shielding in accordance with your requirements
- Customised developments

Delivery comprises

Item	Description
1	Protective fan grille
2	Fan
3	EMC hood
4	FLA outlet/inlet filter

Climate control – Air filtered fans

Air filtered fan FL 100

01108018

- Airflow volume 25 m^3/h
- Converts simply from push to pull operation
- Ingress protection IP 54, NEMA type 12
- Simple to fit without tools by clipping in

Delivery comprises (completely assembled)

Item	Qty	Description
1	1	Front grille and case, plastic, ABS, RAL 7035, self-extinguishing, UL 94 V-0
2	1	Filter, filter class G 3 (EN 779)
3	1	Fan
4	1	2 wire connection, length 310 mm

Order Information

Description	24 V_{DC} Part no.	115 V_{AC} Part no.	230 V_{AC} Part no.
Air filtered fan FL 100	60715-142	60715-141	**60715-140**
Air outlet/inlet filter FLA 100 (items 1 + 2 included), 1 piece			**60715-156**
Replacement filter IP 54 for FL 100 and FLA 100, filter class G 3 (EN 779), PU 5 pieces			**60715-182**

01108019

Air outlet/inlet filter FLA 100

01108020

Replacement filter IP 54

Technical data

Voltage	230 VAC	115 VAC	24 VDC
Frequency	50/60 Hz	50/60 Hz	DC
Airflow volume with filter (free blowing)	25/29 m^3/h	25/29 m^3/h	25 m^3/h
Combination FL + FLA	16/18 m^3/h	16/18 m^3/h	16 m^3/h
Max. static pressure	38 Pa	38 Pa	38 Pa
Noise level (in accordance with EN ISO 3741, 50 Hz)	33 dB(A)	33 dB(A)	33 dB(A)
Operating temperatures	–15 ... +55 °C	–15 ... +55 °C	–15 ... +55 °C
Power consumption	12/11 W	11/11 W	2.4 W
Filter efficiency	88 %	88 %	88 %
MTBF at 40 °C	40000 h	40000 h	80000 h
Approvals	CE, UL, cUL, GOST		

Note

- Mounting for sheet thicknesses from 1 to 3 mm
- Multiple fan solution on request
- Dimensions, cut-outs and tolerances see user manual

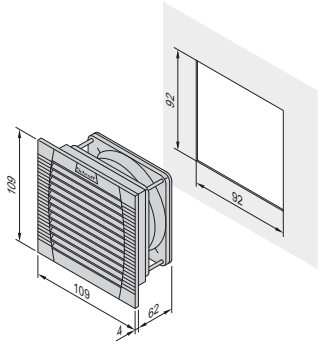

01108057

Air filtered fan FL 100

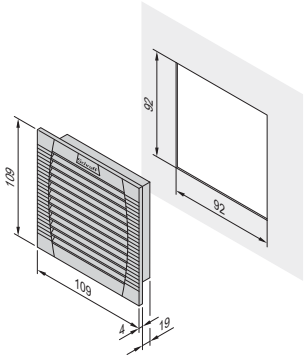

01108058

Air outlet/inlet filter FLA 100

Sheet thicknesses 1 ... 2 mm - cut-out 92 x 92 mm;
Sheet thicknesses >2 ... 3 mm - cut-out 93 x 93 mm

Air filtered fan FL 200

Air outlet/inlet filter FLA 200 Fluted filter IP 55

Replacement filter IP 54

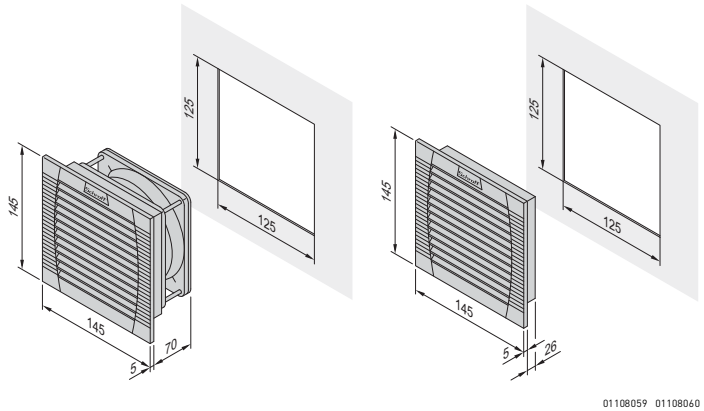

Air filtered fan FL 200 Air outlet/inlet filter FLA 200
Sheet thicknesses 1 ... 2 mm - cut-out 125 x 125 mm;
Sheet thicknesses >2 ... 3 mm - cut-out 126 x 126 mm

- Airflow volume 61 m^3/h
- Converts simply from push to pull operation
- Ingress protection IP 54, with fluted filter IP 55, NEMA type 12
- Simple to fit without tools by clipping in (can also be bolted)

Delivery comprises (Completely assembled)

Item	Qty	Description
1	1	Front grille and case, plastic, ABS, RAL 7035, self-extinguishing, UL 94 V-0
2	1	Filter, filter class G3 (EN 779)
3	1	Fan
4	1	Connection AC (terminal strip), connection DC (2 wires, 310 mm long)

Order Information

Description	24 V_{DC} Part no.	115 V_{AC} Part no.	230 V_{AC} Part no.
Air filtered fan FL 200	60715-145	60715-144	**60715-143**
Air outlet/inlet filter FLA 200 (items 1 + 2 included), 1 piece			**60715-157**
Replacement filter IP 54 for FL 200 and FLA 200, filter class G 3 (EN 779), PU 5 pieces			**60715-183**
Fluted filter IP 55 for FL 200 and FLA 200, filter class G 4 (EN 779), PU 5 pieces			**60715-187**

Technical data

Voltage	230 VAC	115 VAC	24 VDC
Frequency	50/60 Hz	50/60 Hz	DC
Airflow volume with IP 54 filter (free blowing)	61/70 m^3/h	61/70 m^3/h	61 m^3/h
Airflow volume with IP 55 filter (free blowing)	56/64 m^3/h	56/64 m^3/h	56 m^3/h
Combination FL + FLA IP 54	44/52 m^3/h	44/52 m^3/h	44 m^3/h
Combination FL + FLA IP 55	40/46 m^3/h	40/46 m^3/h	40 m^3/h
Max. static pressure IP 54	60 Pa	60 Pa	60 Pa
Max. static pressure IP 55	57 Pa	57 Pa	61 Pa
Noise level in accordance with EN ISO 3741, 50 Hz)	44 dB(A)	44 dB(A)	44 dB(A)
Max. ambient temperature	15 ... +55 °C	-5 ... +55 °C	-25 ... +55 °C
Power consumption	19/18 W	20/20 W	5 W
Filter efficiency IP 54	83 %	83 %	83 %
Filter efficiency IP 55	91 %	91 %	91 %
MTBF at 40 °C	40000 h	40000 h	80000 h
Approvals	CE, UL, cUL, GOST		

Note

- Mounting for sheet thicknesses from 1 to 3 mm
- Multiple fan solution on request
- Dimensions, cut-outs and tolerances see user manual

Climate control – Air filtered fans

Air filtered fan FL 225

- Airflow volume 110 m^3/h
- Converts simply from push to pull operation
- Ingress protection IP 54, with fluted filter IP 55, NEMA type 12

Delivery comprises (completely assembled)

Item	Qty	Description
1	1	Front grille and case, plastic, ABS, RAL 7035, self-extinguishing, UL 94 V-0
2	1	Filter, filter class G 3 (EN 779)
3	1	Fan
4	1	Connection AC (terminal block), DC (spring terminal strip)

Order Information

Description	115 V_{AC} Part no.	230 V_{AC} Part no.
Air filtered fan FL 225	60715-147	**60715-146**
Air outlet/inlet filter FLA 225 (items 1 + 2 included), 1 piece		**60715-158**
Replacement filter IP 54 for FL 225 and FLA 225, filter class G 3 (EN 779), PU 5 pieces		**60715-184**
Fluted filter IP 55 for FL 225 and FLA 225, filter class G 4 (EN 779), PU 5 pieces		**60715-188**

Air outlet/inlet filter FLA 225 Fluted filter IP 55

Replacement filter IP 54

Technical data

Voltage	230 VAC	115 VAC
Frequency	50/60 Hz	50/60 Hz
Airflow volume with IP 54 filter (free blowing)	110/125 m^3/h	110/125 m^3/h
Airflow volume with IP 55 filter (free blowing)	100/110 m^3/h	100/110 m^3/h
Combination FL + FLA IP 54	82/93 m^3/h	83/92 m^3/h
Combination FL + FLA IP 55	55/64 m^3/h	55/64 m^3/h
Max. static pressure IP 54	66 Pa	66 Pa
Max. static pressure IP 55	61 Pa	61 Pa
Noise level (in accordance with EN ISO 3741, 50 Hz)	40 dB(A)	40 dB(A)
Max. ambient temperature	–15 ... +55 °C	–15 ... +55 °C
Power consumption	19/18 W	20/20 W
Filter efficiency IP 54	88 %	88 %
Filter efficiency IP 55	91 %	91 %
MTBF at 40 °C	40000 h	40000 h
Approvals	CE, UL, cUL, GOST	

Note

- Mounting for sheet thicknesses from 1 to 3 mm
- Multiple fan solution on request
- Dimensions, cut-outs and tolerances see user manual

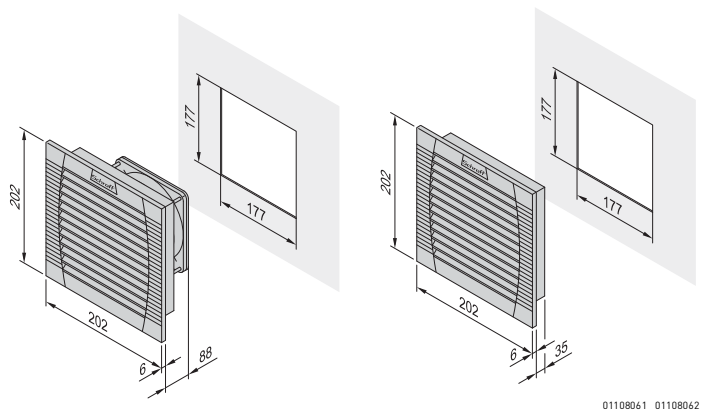

Air filtered fan FL 225 Air outlet/inlet filter FLA 225
Sheet thicknesses 1 ... 2 mm - cut-out 177 x 177 mm;
Sheet thicknesses >2 ... 3 mm - cut-out 178 x 178 mm

Air filtered fan FL 250

- Airflow volume 156 m^3/h
- Converts simply from push to pull operation
- Ingress protection IP 54, with fluted filter IP 55, NEMA type 12
- Simple to fit without tools by clipping in (can also be bolted)

Delivery comprises (completely assembled)

Item	Qty	Description
1	1	Front grille and case, plastic, ABS, RAL 7035, self-extinguishing, UL 94 V-0
2	1	Filter, filter class G 3 (EN 779)
3	1	Fan
4	1	Connection spring terminal strip

Order Information

Description	115 V_{AC} Part no.	230 V_{AC} Part no.
Air filtered fan FL 250	60715-149	**60715-148**
Air outlet/inlet filter FLA 250/300 (items 1 + 2 included), 1 piece		**60715-159**
Replacement filter IP 54 for FL 250/300 and FLA 250/300, filter class G 3 (EN 779), PU 5 pieces		**60715-185**
Fluted filter IP 55 for FL 250/300 and FLA 250/300, filter class G 4 (EN 779), PU 5 pieces		**60715-189**

Air outlet/inlet filter FLA 250/300 Fluted filter IP 55

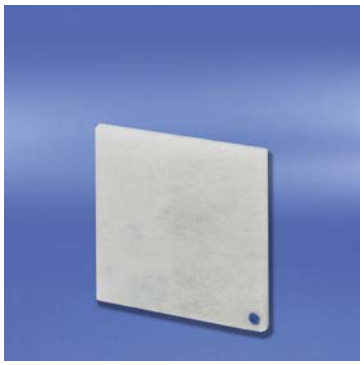

Replacement filter IP 54

Technical data

Voltage	230 VAC	115 VAC
Frequency	50/60 Hz	50/60 Hz
Airflow volume with IP 54 filter (free blowing)	156/171 m^3/h	151/170 m^3/h
Airflow volume with IP 55 filter (free blowing)	145/160 m^3/h	140/160 m^3/h
Combination FL + FLA IP 54	116/127 m^3/h	116/127 m^3/h
Combination FL + FLA IP 55	109/113 m^3/h	109/113 m^3/h
Max. static pressure IP 54	52 Pa	52 Pa
Max. static pressure IP 55	49 Pa	49 Pa
Noise level (in accordance with EN ISO 3741, 50 Hz)	40 dB(A)	40 dB(A)
Max. ambient temperature	–15 ... +55 °C	–15 ... +55 °C
Power consumption	18/17 W	18/17 W
Filter efficiency IP 54	88 %	88 %
Filter efficiency IP 55	91 %	91 %
MTBF at 40 °C	40000 h	40000 h
Approvals	CE, UL, cUL, GOST	

Note

- Mounting for sheet thicknesses from 1 to 3 mm
- Multiple fan solution on request
- Dimensions, cut-outs and tolerances see user manual

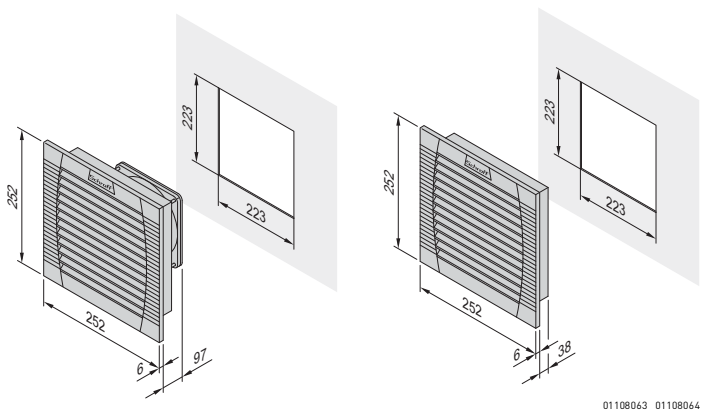

Air filtered fan FL 250 Air outlet/inlet filter FLA 250/300
Sheet thicknesses 1 ... 2 mm - cut-out 223 x 223 mm;
Sheet thicknesses >2 ... 3 mm - cut-out 224 x 224 mm

Climate control – Air filtered fans

Air filtered fan FL 300

- Airflow volume 256 m^3/h
- Converts simply from push to pull operation
- Ingress protection IP 54, with fluted filter IP 55, NEMA type 12
- Simple to fit without tools by clipping in (can also be bolted)

Delivery comprises (completely assembled)

Item	Qty	Description
1	1	Front grille and case, plastic ABS, RAL 7035, self-extinguishing, UL 94 V-0
2	1	Filter, filter class G 3 (EN 779)
3	1	Fan
4	1	Connection spring terminal strip

Order Information

Description	115 V_{AC} Part no.	230 V_{AC} Part no.
Air filtered fan FL 300	60715-151	**60715-150**
Air outlet/inlet filter FLA 250/300 (items 1 + 2 included), 1 piece		**60715-159**
Replacement filter IP 54 for FL 250/300 and FLA 250/300, filter class G 3 (EN 779), PU 5 pieces		**60715-185**
Fluted filter IP 55 for FL 250/300 and FLA 250/300, filter class G 4 (EN 779), PU 5 pieces		**60715-189**

Air outlet/inlet filter FLA 250/300 Fluted filter IP 55

Replacement filter IP 54

Technical data

Voltage	230 VAC	115 VAC
Frequency	50/60 Hz	50/60 Hz
Airflow volume with IP 54 filter (free blowing)	256/292 m^3/h	256/292 m^3/h
Airflow volume with IP 55 filter (free blowing)	233/265 m^3/h	233/265 m^3/h
Combination FL + FLA IP 54	231/265 m^3/h	231/265 m^3/h
Combination FL + FLA IP 55	180/207 m^3/h	180/207 m^3/h
Max. static pressure IP 54	116 Pa	116 Pa
Max. static pressure IP 55	112 Pa	112 Pa
Noise level (in accordance with EN ISO 3741, 50 Hz)	42 dB(A)	42 dB(A)
Max. ambient temperature	–15 ... +55 °C	–15 ... +55 °C
Power consumption	45/39 W	40/40 W
Filter efficiency IP 54	88 %	88 %
Filter efficiency IP 55	91 %	91 %
MTBF at 40 °C	40000 h	40000 h
Approvals	CE, UL, cUL, GOST	

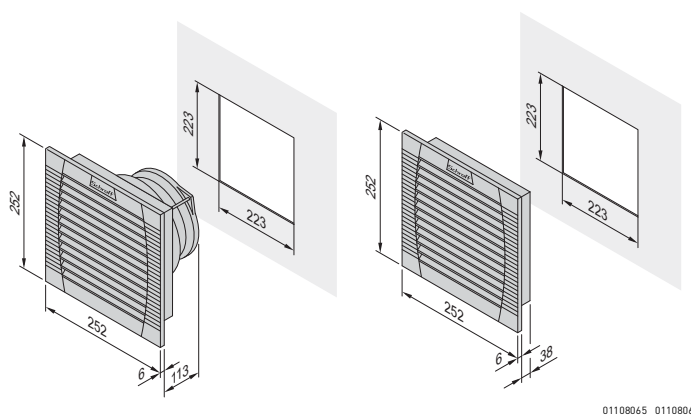

Air filtered fan FL 300 Air outlet/inlet filter FLA 250/350
Sheet thicknesses 1 ... 2 mm - cut-out 223 x 223 mm;
Sheet thicknesses >2 ... 3 mm - cut-out 224 x 224 mm

Note

- Mounting for sheet thicknesses from 1 to 3 mm
- Multiple fan solution on request
- Dimensions, cut-outs and tolerances see user manual

Air filtered fan FL 500

Air outlet/inlet filter FLA 500/600 Fluted filter IP 55

Replacement filter IP 54

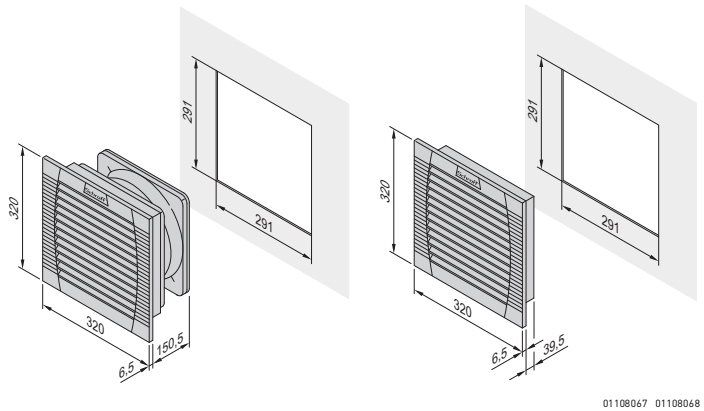

Air filtered fan FL 500/600 Air outlet/inlet filter FLA 500/600
Sheet thicknesses 1 ... 2 mm - cut-out 223 x 223 mm;
Sheet thicknesses >2 ... 3 mm - cut-out 224 x 224 mm

- Airflow volume 480 m^3/h
- Converts simply from push to pull operation
- Ingress protection IP 54, with fluted filter IP 55, NEMA type 12
- Simple to fit without tools by clipping in (can also be bolted)

Delivery comprises (completely assembled)

Item	Qty	Description
1	1	Front grille and case, plastic, ABS, RAL 7035, self-extinguishing UL 94 V-0
2	1	Filter, filter class G3 (EN 779)
3	1	Fan
4	1	Connection spring terminal strip

Order Information

Description	115 V_{AC} Part no.	230 V_{AC} Part no.
Air filtered fan FL 500	60715-153	**60715-152**
Air outlet/inlet filter FLA 500/600 (items 1 + 2 included), 1 piece		**60715-160**
Replacement filter IP 54 for FL 500/600 and FLA 500/600, filter class G 3 (EN 779), PU 5 pieces		**60715-186**
Fluted filter IP 55 for FL 500/600 and FLA 500/600, filter class G 4 (EN 779), PU 5 pieces		**60715-190**

Technical data

Voltage	230 VAC	115 VAC
Frequency	50/60 Hz	50/60 Hz
Airflow volume with IP 54 filter (free blowing)	505/505 m^3/h	505/505 m^3/h
Airflow volume with IP 55 filter (free blowing)	480/480 m^3/h	480/480 m^3/h
Combination FL + FLA IP 54	380/380 m^3/h	380/380 m^3/h
Combination FL + FLA IP 55	370/370 m^3/h	370/370 m^3/h
Max. static pressure IP 54	76 Pa	76 Pa
Max. static pressure IP 55	74 Pa	74 Pa
Noise level (in accordance with EN ISO 3741, 50 Hz)	54 dB(A)	54 dB(A)
Max. ambient temperature	–15 ... +55 °C	–15 ... +55 °C
Power consumption	65/80 W	75/90 W
Filter efficiency IP 54	88 %	88 %
Filter efficiency IP 55	91 %	91 %
MTBF at 40 °C	40000 h	40000 h
Approvals	CE, UL, cUL, GOST	

Note

- Mounting for sheet thicknesses from 1 to 3 mm
- Multiple fan solution on request
- Dimensions, cut-outs and tolerances see user manual

Climate control – Air filtered fans

Air filtered fan FL 600

- Airflow volume 640 m^3/h
- Converts simply from push to pull operation
- Ingress protection IP 54, with fluted filter IP 55, NEMA type 12
- Simple to fit without tools by clipping in (can also be bolted)

Delivery comprises (completely assembled)

Item	Qty	Description
1	1	Front grille and case, plastic, ABS, RAL 7035, self-extinguishing, UL 94 V-0
2	1	Filter, filter class G 3 (EN 779)
3	1	Fan
4	1	Connection spring terminal strip

Order Information

Description	115 V_{AC} Part no.	230 V_{AC} Part no.
Air filtered fan FL 600	60715-155	**60715-154**
Air outlet/inlet filter FLA 500/600 (items 1 + 2 included), 1 piece		**60715-160**
Replacement filter IP 54 for FL 500/600 and FLA 500/600, filter class G 3 (EN 779), PU 5 pieces		**60715-186**
Fluted filter IP 55 for FL 500/600 and FLA 500/600, filter class G 4 (EN 779), PU 5 pieces		**60715-190**

Air outlet/inlet filter FLA 500/600 Fluted filter IP 55

Replacement filter IP 54

Technical data

Voltage	230 VAC	115 VAC
Frequency	50/60 Hz	50/60 Hz
Airflow volume with IP 54 filter (free blowing)	770/785 m^3/h	770/785 m^3/h
Airflow volume with IP 55 filter (free blowing)	640/653 m^3/h	640/653 m^3/h
Combination FL + FLA IP 54	490/501 m^3/h	490/501 m^3/h
Combination FL + FLA IP 55	445/445 m^3/h	445/445 m^3/h
Max. static pressure IP 54	134 Pa	134 Pa
Max. static pressure IP 55	132 Pa	132 Pa
Noise level in accordance with EN ISO 3741, 50 Hz)	63 dB(A)	63 dB(A)
Max. ambient temperature	–15 ... +55 °C	–15 ... +55 °C
Power consumption	115/150 W	110/160 W
Filter efficiency IP 54	88 %	88 %
Filter efficiency IP 55	91 %	91 %
MTBF at 40 °C	40000 h	40000 h
Approvals	CE, UL, cUL, GOST	

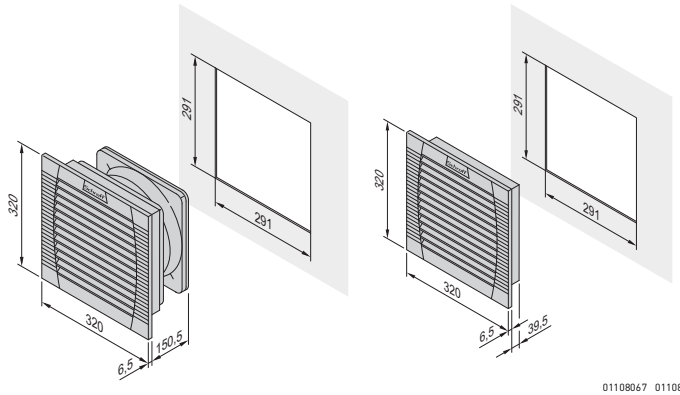

Air filtered fan FL 500/600 Air outlet/inlet filter FLA 500/600
Sheet thicknesses 1 ... 2 mm - cut-out 223 x 223 mm;
Sheet thicknesses >2 ... 3 mm - cut-out 224 x 224 mm

Note

- Mounting for sheet thicknesses from 1 to 3 mm
- Multiple fan solution on request
- Dimensions, cut-outs and tolerances see user manual

Heaters from 10 W to 150 W

10 / 20 W

50 / 100 / 150 W

Dimension drawing

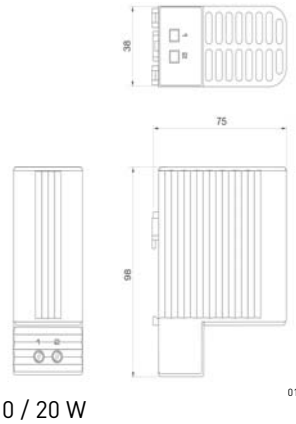

10 / 20 W

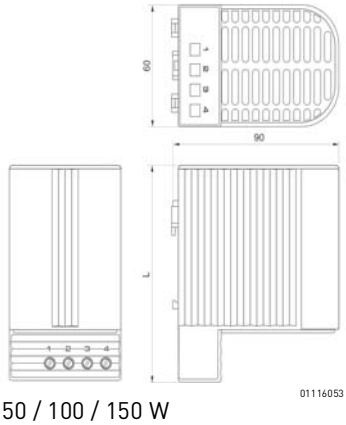

50 / 100 / 150 W

- Compact heater without fan
- Simple and fast assembly with clip-on attachment
- Broad range voltage input AC/DC 120 ... 240 V
- Low surface temperature, protective insulation, and temperature limitation with PTC resistance

Delivery includes (completely assembled)

Item	Qty	Description
1	1	Heater element, voltage AC/DC 100 ... 240 V; PTC resistor, self-regulating
2	1	Heating body housing, plastic UL94 V-0; type of fixing: Clip for 35 mm DIN rail EN 60715
3	1	Connection: 2-pin (10 W, 20 W) and/or 4-pin (50 W, 100 W, 150 W) terminal, 2.5 mm², torque 0.8 Nm max.

Order Information

Description	Part no.
10 W	**60715-220**
20 W	**60715-221**
50 W	**60715-222**
100 W	**60715-223**
150 W	**60715-224**

Note

- Thermostat for heating see page 4.65
- Hygrostat see page 4.68

Technical data

	10 W	20 W	50 W	100 W	150 W
Heater output in W	10	20	50	100	150
Max. switch-on current in A	1.0	2.5	2.5	4.5	8.0
Pre-fuse, delay-action in A	2.0	4.0	4.0	8.0	10.0
Type of protection	IP 20	IP 20	IP 20	IP 20	IP 20
Class of protection	II	II	II	II	II
Dimensions H × W × D in mm	98 × 38 × 75	98 × 38 × 75	110 × 60 × 90	110 × 60 × 90	150 × 60 × 90
Weight in kg	0.2	0.3	0.3	0.3	0.5
Connection	2-pin terminal, 2.5 mm², torque 0.8 Nm		4-pin terminal, 2.5 mm², torque 0.8 Nm		
Surface temperature in °C	< + 80°C, with exception of above mesh surface				
Test seal	CE, UL, VDE, EAC, RoHS				
Mounting	Clip-on attachment for 35 mm DIN rail (EN 60715)				

Climate control – Accessories

Heaters with heater fans from 150 W to 400 W

01116004

- Compact heater with fan, small, compact design with high heater output
- Simple and fast assembly with clip-on attachment or bolt fixing
- Dynamic heating up and temperature limitation by PTC technology
- Quiet

Dimension drawing

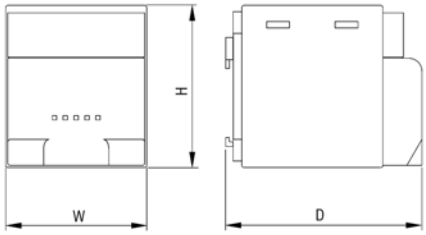

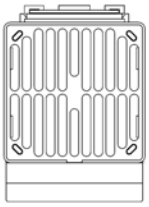

01116050

Clip attachment

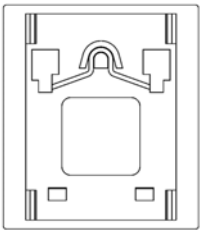

01116051

Delivery includes (completely assembled)

Item	Qty	Description
1	1	Heater element, voltage 230 V_{AC}, resistor (PTC resistance) self-regulating
2	1	Heating body housing, plastic UL94 V-0; type of fixing: Clip for 35 mm DIN rail EN 60715
3	1	Axial fan, airflow from bottom to top
4	1	Connection: 2-pin terminal, 2.5 mm², torque 0.8 Nm max.

Order Information

Description	Part no.
150 W	**60715-225**
250 W	**60715-226**
400 W	**60715-227**

Note

- Thermostat for heating see page 4.65
- Hygrostat see page 4.68

Technical data

	150 W	250 W	400 W
Heater output in W	150	250	400
Max. switch-on current in A	9.0	12	15
Pre-fuse, delay-action in A	10	10	16
Axial fan, free blowing output	13.8 m²/h	45 m²/h	45 m²/h
Type of protection	IP 20	IP 20	IP 20
Class of protection	II	II	II
Dimensions H × W × D in mm	75 × 65× 90	90 × 85 × 111	90 × 85 × 111
Weight in kg	0.3	0.5	0.5
Surface temperature in °C	< + 50°C, with exception of above mesh surface		< + 65°C, with exception of above mesh surface
Connection	2-pin terminal, 2.5 mm², torque 0.8 Nm max.		
Test seal	CE, UL, VDE, EAC, RoHS		
Mounting	Clip-on attachment for 35 mm DIN rail (EN 60715)		

Heaters from 30 W to 150 W

- Radiator heater (without fan)
- Simple and fast assembly with clip-on attachment and press-on terminal connection
- Wide input voltage range 110 ... 250 V_{AC}
- Temperature limiting with PTC resistor

Delivery comprises (completely assembled)

Item	Qty	Description
1	1	Heater element, voltage range 110 ... 250 V_{AC}; resistor (PTC) self-regulating
2	1	Heating body, Al extrusion, anodised Fixing: clip for 35 mm DIN rail EN 50022
3	1	Connection: type 30, with connecting cable (3 x 0.5 mm^2, 300 mm long, black); type 45, 100, 150 with press-on terminal connection (for stranded/rigid wire 3 x 0.5 ... 2.5 mm^2)

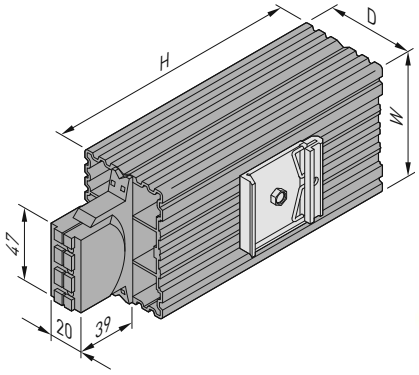

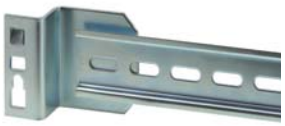

Support rail

Order Information

Description	30 Part no.	45 Part no.	100 Part no.	150 Part no.
Heaters from 30 W to 150 W	**60715-020**	**60715-021**	**60715-023**	**60715-030**
Support rail DIN rail EN 50022 (35 mm), length 215 mm, 1 piece				**20715-001**

Technical data

	30 W	45 W	100 W	150 W
Heater output in W	30	45	100	150
Surface temperature in °C	approx. 100	approx. 105	approx. 130	approx.140
Max. switch-on current in A	3,0	3,5	4.0	9,0
Type of protection	IP 54	IP 20	IP 20	IP 20
Class of protection	I	I	I	I
Dimensions H × W × D in mm	70 × 25 × 50	69 × 70 × 50	144 × 70 × 50	224 × 70 × 50
Weight in kg	0.2	0.3	0.5	0.7
Test seal	VDE, CE, UL (File E150057)	CE, UL (File E150057)	CE, UL (File E150057)	CE, UL (File E150057)
Assembly	Clip-on attachment for 35 mm DIN rail (EN 50022)			

Note

- Thermostat for heating see page 4.65
- Hygrostat see page 4.68

Climate control – Accessories

Heater fans 475/550 W

01108030

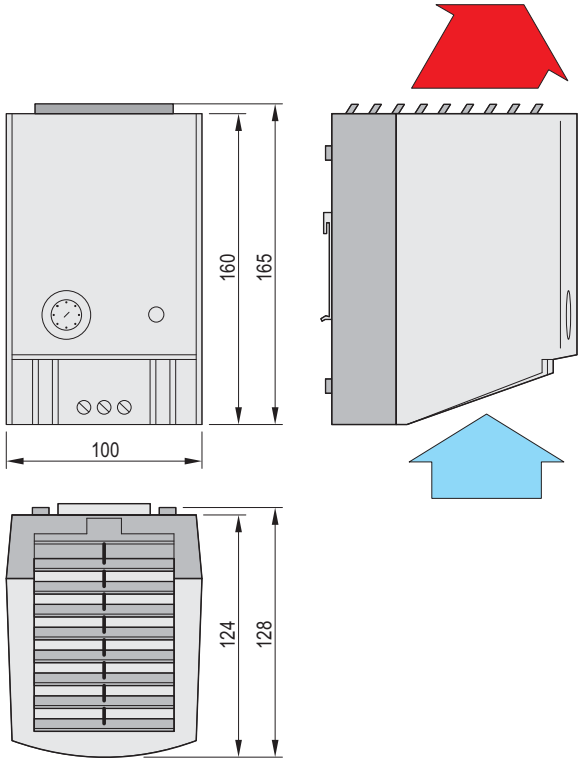

01108069

00508013

Support rail

- Heater with fan and thermostat
- Simple and fast assembly with clip-on attachment
- 3-pin terminal clamp, separate heater/fan connection
- Thermostat from 0 ... 60 °C
- Temperature limiting with PTC resistor

Delivery comprises (completely assembled)

Item	Qty	Description
1	1	Plastic housing, polycarbonate (RAL 9002, grey white), clip for 35 mm DIN rail EN 50022
2	1	Heater element, 230 V_{AC}, resistor (PTC) self-regulating
3	1	Thermostat
4	1	230 V_{AC} fan

Order Information

Description	Part no.
Heater 475 W	**60715-017**
Heater 550 W	**60715-018**
Support rail DIN rail EN 50022 (35 mm), length 215 mm, 1 piece	**20715-001**

Technical data

Voltage range	230 VAC			
Frequency	50 Hz	60 Hz	50 Hz	60 Hz
Heater output	**475 W**	550 W	**550 W**	650 W
Air capacity of axial fan	35 m^3/h	39 m^3/h	45 m^3/h	50 m^3/h
Current at switch-on approx.	11 A		13 A	
Weight	0.9 kg		1.1 kg	
Heater element	Resistor (PTC), self-regulating			
Connection	3-pin connecting terminal, 2.5 mm^2, separate connection heating/fan			
Thermostat	Adjustment range 0 ... 60 °C			
Control lamp of control system	Glow lamp			
Temperature control	In the event of fan failure			
Type of protection	IP 20			
Class of protection	II			
Assembly	Clip-on attachment for 35 mm DIN rail (EN 50022)			
Dimensions	Height 165 mm, width 100 mm, depth 128 mm			

Heater fan 400 W, modular

01108007

Example of a complete heater unit:
1: heater, 2: fan, 3: protective grille, 4: connection cable

01108006

Heater element

00508013

Support rail

- Modular system consisting of:
  heater element, fan, protective grille and connecting cable
- Fan not included in delivery extent; please order fan with desired air capacity separately
- Simple and fast assembly with clip-on attachment
- Overheating protection through thermal switch

Delivery comprises (completely assembled)

Item	Qty	Description
1	1	Heater element, high-performance cartridge
2	1	Connecting cable fan - heating distributor, length 0.3 m
3	1	GND/earth cable, ring tag - open end, length 0.3 m
4	1	Clip-on attachment for DIN rail with assembly kit

Order Information

Description	115 V_{AC} Part no.	230 V_{AC} Part no.
Heater fan 400 W, modular	**60715-028**	**60715-029**
Support rail DIN rail EN 50022 (35 mm), length 215 mm, 1 piece		**20715-001**

Technical data

Voltage range	115 V_{AC}	230 V_{AC}
Current at switch-on	3.5 A	1.8 A
Heater output	400 W	
Air capacity m^3/h	Please choose desired fan	
Surface temperature with fan	Approx. 140 °C	
Type of protection	IP 20	
Class of protection	I, with GND/earthing	
Dimensions: height x width x depth in mm	22 x 120 x 160	
Assembly	Clip for 35 mm DIN rail EN 50022	

Note

- **Attention**: Danger of overheating, never use heater without fan
- Fan see page 4.63
- Thermostat for heating see page 4.65
- Hygrostat see page 4.68

Climate control – Accessories

AC fans for heating 400 W

01108005

Connecting cable

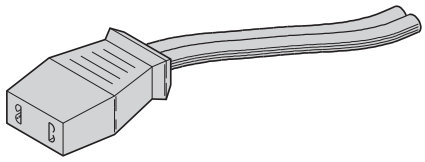

KTA43091

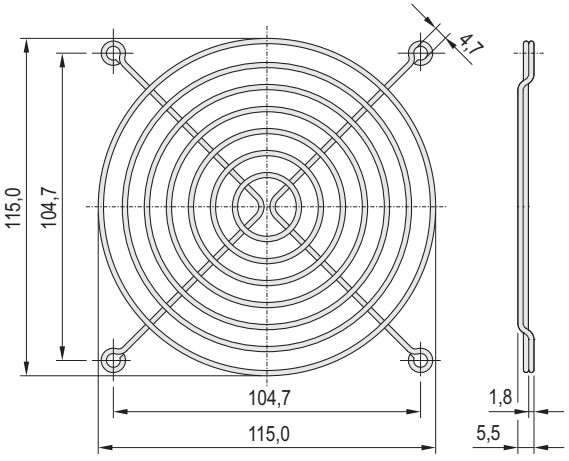

01108055

Protective grille

- The fan is screwed below the heater and the cable is connected to the heater (please order connecting cable and protective grille separately)

Delivery comprises

Item	Qty	Description
1	1	Fan (width 119 mm, depth 119 mm)

Order Information

	Height mm	Airflow volume m^3/h	115 V_{AC} Part no.	230 V_{AC} Part no.
Type A	25	84	**20713-146**	**20713-142**
Type B	25	108	**20713-147**	**20700-001**
Type C	38	162	**20713-244**	**20713-243**
PVC (2 x 0.75 mm²), 1 m long with 2 Faston connectors 2.8 x 0.5 mm to DIN 46343 T1, 1 piece				**21101-246**
Protective grille, metal, to screw-on				**60197-019**

Dimensions AC fans

Type	Type A		Type B		Type C	
Frequency in Hz	**50**	**60**	**50**	**60**	**50**	**60**
Airflow volume in m^3/h	84	90	108	120	162	192
Noise level per fan in dB(A)	29	30	34	38	37	41
Max. static pressure in Pa	23	21	41	41	73	88
Max. ambient temperature in °C	70	70	70	70	70	70
Power consumption in W	8	7	14	11	15	14
Dimensions: height in mm (width 119 mm × depth 119 mm)	25		25		38	

Note

- Please order connection cable and protective grille separately

Speed control for fans with C13 plug

01111001

01111002

Speed controller with connecting cables

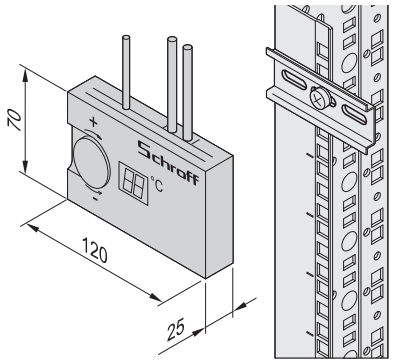

01105055

Block diagram

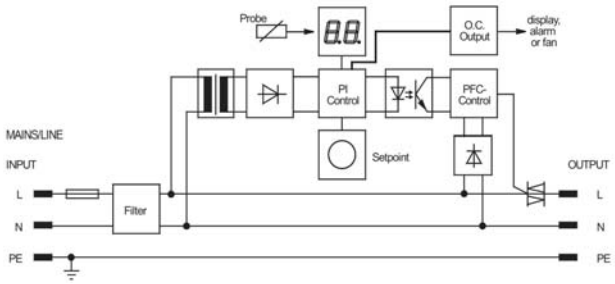

01111050

Speed varies in relation to temperature

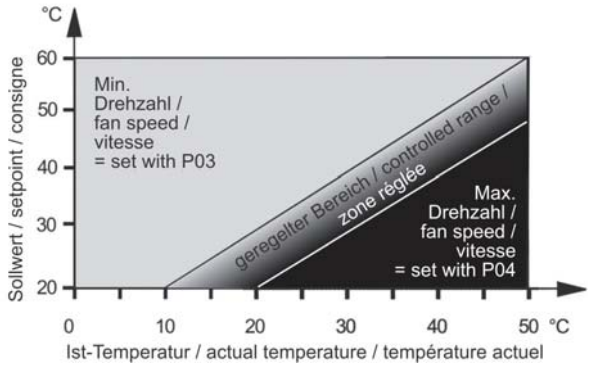

01111051

- Suitable for all AC fans and fan units (up to 300 W) with IEC 60320 C13 plug (plug & play)
- Simple to mount on the support rail provided
- Simple adjustment of switch-on temperature (with knob and digital display)
- External sensor can be fitted at a desired measurement point
- Open-collector output (parametrisable)
  - Alarm output (active/passive)
  - DC fans (PWM output)
  - Remote display (via optional digital display with front panel)

NEW

Delivery comprises

Item	Qty	Description
1	1	Speed controller; input/output voltages 115 ... 240 V_{AC}, see Technical Data
2	1	Temperature sensor, cable length 1.5 m
3	1	Fan cable, 2 m, with IEC 60320 socket
4	1	Mains cable, 3 m, with connecting plug
5	1	Support rail, St, zinc-plated (EN 50022)
6	1	Assembly kit

Order Information

Speed control for fans with C13 plug	Part no.
Mains cable SCHUKO/UTE plug	**60715-005**
Mains cable IEC 60320 C13 plug	**60715-006**
Accessories	
Thermostat with digital display 230 VAC , 1 piece	**Page 4.67**
Thermostat with digital display 115 VAC , 1 piece	**Page 4.67**
Connecting cable for DC fans or alarm output Length 2 m, 2-wire (0.34 mm^2), 1 piece	**60715-007**

Technical data

Voltage range	115 ... 240 V_{AC} (90 ... 264 V_{AC})
Frequency	48 ... 62 Hz
Power consumption	max. 4 VA
Display	LCD display, height 13 mm, red
Max. connection power	300 W (230 V_{AC}), 150 W (115 V_{AC})
Max. continuous current	1.3 A
Adjustment range	+20 ... +60 °C with potentiometer
Fan speed frequency	25 ... 100 %
Sensor	External NTC resistor
Sensor connection	AMP plug contact and cable, 1.5 m, 2 x 0.22 mm
In case of sensor failure	Max. speed
Fan connection	Cable 2 m with C13 IEC 60320 socket
Open-collector output	AMP plug contact, programmable function, $V_{max.}$ 30 V_{DC}, $I_{max.}$ 30 mA
Mains connection	Cable 3 m with plug
Mechanics	Case, IP 30, plastic, weight 0.5 kg, mounts on horizontal rail with lip DIN EN 50022
Dimensions	Width 120 mm, height 70 mm, depth 25 mm
Environmental conditions	0 ... 60°C, max. 85 % rel. humidity, non-condensing

Note

- Thermostat with digital display, see page 4.67

Climate control – Accessories

Thermostat with integrated temperature sensor

01108004

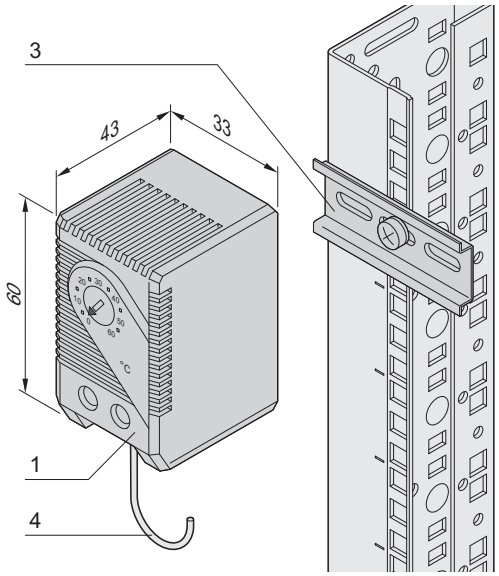

01108050

01108009

Connection cable: 2-pin, ferrules - IEC socket

01108010

Connection cable: 2-pin, ferrules - 3-pin, ferrules

- To control fans or heaters
- Adjustment range 5 ... 60 °C
- Individual adaptation with three separate components: thermostat (for cooling or heating), assembly material, connecting cable (IEC connector or ferrules)
- 2 versions
  - for heating
  - for cooling

Delivery comprises

Item	Qty	Description
1	1	Thermostat, width 33 mm, height 60 mm, depth 43 mm; clip-on attachment for 35 mm DIN rail EN 50022, switched voltage 120 ... 250 V_{AC}
2	1	User manual

Order Information

Description	Part no. for cooling	Part no. for heating
Thermostat with integrated temperature sensor	**60715-136**	**60715-137**
Accessories		
Item 3 DIN rail (EN 50022) 35 mm; length 75 mm; with fixing materials kit, PU 1 set		**21120-178**
Item 4 Connection cable, SCHUKO/UTE connector, cable length 1.5 m; connection on thermostat/hygrostat, 2-pin, ferrules; connection on fan IEC socket; 1 piece		**62150-201**
Item 4 Connection cable, SCHUKO/UTE connector, cable length 1.5 m; connection on thermostat/hygrostat, 2-pin, ferrules; connection on fan/heater, 3-pin, ferrules, 1 piece		**62150-264**

Dimensions

Thermostat	for cooling (make contact), blue control button	for heating (break contact), red control button
Adjustment range	0 ... 60 °C	
Switching temperature difference	7 K (± 4 K tolerance)	
Sensing element	Thermobimetal (snap-action contact)	
Contact resistance	<10 mΩ	
Lifespan	>100000 cycles	
Max. switch performance	10 A at 250 V_{AC}, 15 A at 120 V_{AC}; 30 W at DC voltage	
Connection	2-pin clamp, up to 2.5 mm^2, torque max. 0.5 Nm	
Case	Plastic, in accordance with UL 94 V-0, light grey	
Dimensions	Height 60 mm, width 33 mm, depth 43 mm	
Assembly	Clip for 35 mm DIN rail, EN 50022	
Weight	40 g	
Operating/storage temperature	-20 ... +80 °C/-45 ... +80 °C	
Protection class	IP 20	

Climate control – Accessories

Thermostat with integrated temperature sensor

01102008

- To control heaters or fans
- Adjustment range 5 ... 60 °C

Delivery comprises

Item	Qty	Description
1	1	Thermostat with clip-on attachment for 35 mm DIN rail EN 50022, voltage 200 ... 250 V_{AC} and 100 ... 130 V_{AC}
2	1	Support rail, length 200 mm
3	1	Connection cable, length 1.5 m
4	1	Strain relief
5	1	Assembly kit for cabinet assembly

Order Information

Description	Part no.
Thermostat with integrated temperature sensor	20715-002

Technical data

Dimensions	Height: 75 mm, width: 75 mm, depth: 25 mm
Adjustment range	5 ... 60 °C
Switch difference	0,5 K
Supply voltage	200 ... 250 V_{AC}
Contact load (ohmic load/inductive load)	Heat (terminals 1 - 2) 10 A / 4 A Cool (terminals 1 - 3) 5 A / 2 A
Contacts	Changeover contact, single pole
Type of assembly	Bolt-on, snap mounting for slide rail

Thermostat with external temperature sensor

01102007

- To control heaters or fans
- External sensor can be positioned near the critical sub-assembly
- Adjustment range 20 ... 60 °C, switch difference 3 ... 10 K

CE

Delivery comprises

Item	Qty	Description
1	1	Thermostat with external temperature sensor, sensor length approx. 1.7 m
2	1	Mounting plate for cabinet assembly, Al, 2.5 mm
3	1	Assembly kit

Order Information

Description	Part no.
Thermostat with external temperature sensor	20715-003

Technical data

Dimension (height x width x depth)	93 mm x 68 mm x 44 mm
Adjustment range	20 ... 60 °C
Switching difference	3 ... 10 K
Mains/line voltage	90 ... 260 V_{AC}
Contact load (ohmic load/inductive load)	24 A/10 A
Contacts	Change-over, single pin
Assembly	Screw-fixed

Climate control – Accessories

Thermostat with digital display

01197001

- Adjustment range from -50 to +100 °C (switch difference 0 ... 10 °C)
- Display switchable from °C to °F
- Programmable (secured against unauthorised operation)
- 3-character red segment display

Front panel 1 U

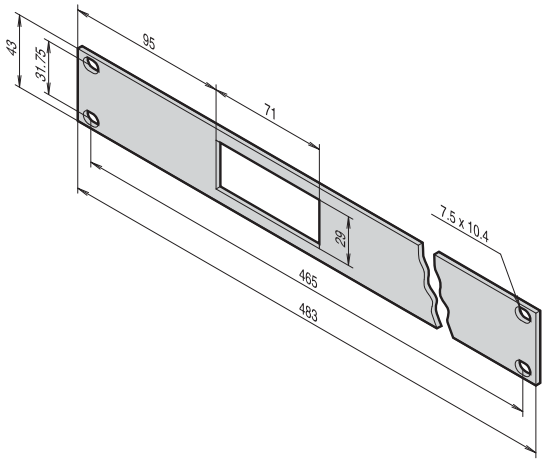

SZA45550

Order Information

Description	Part no.
Thermostat with digital display, 230 V_{AC}	**60715-132**
Thermostat with digital display, 115 V_{AC}	**60715-133**
Front panel 1 U, RAL 7035 with cut-out for thermostat	**30118-315**
Front panel 1 U, anodised with cut-out for thermostat	**30118-267**
Front panel 1 U, RAL 7021 with cut-out for thermostat	**30118-360**

Technical data

Operating voltage	115 V_{AC} or 230 V_{AC}
Power consumption	Approx. 3.5 W
Dimensions	Height: 35 mm, width: 76 mm, depth: 59 mm
Assembly cut-out	28.8 × 70.5 mm
Adjustment range	–50 ... +100 °C
Switch difference	0 ... 10 K selectable
Data safeguarding at power failure	Non-volatile memory
Contact load (ohmic load/inductive load)	8 A/3 A (ohmic/inductive load)
Input/sensor	PTC resistance, -55 ... +120 °C, cable length 3 m
Contacts	Relay, changeover contact, single pin
Protection class to front	IP 54
Connection	Screw-on terminals, 2.5 mm^2
Fixing	With clamping bracket
Type of assembly	Can be screwed on

Hygrostat

01116006

Hygrostat with adjustable and permanently set relative humidity

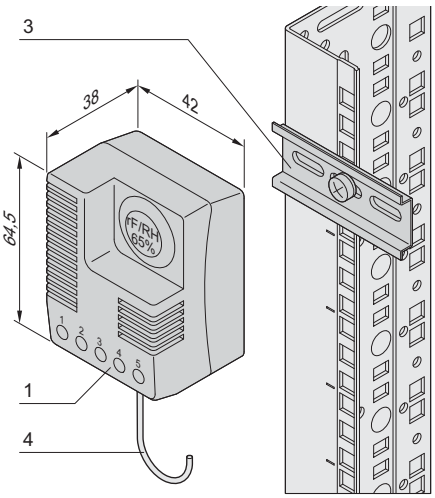

01108051

01108009

connecting cable, connection cable, 2-pole, ferrule - IEC-(female) connector; input jack; bush; socket

01108010

connecting cable, connection cable, 2-pole, ferrules - ferrules

- Adjustable or fixed relative air humidity
- Switches fan or heaters when the set value is reached
- Visual display
- Integrated LED lights up when the connected consumer is switched on
- Individual adaptation with three separate components: Hygrostat, assembly material, connecting cable (input with SCHUKO/UTE connector; output with IEC connector or open end) please order separately

Delivery includes (assembled)

Item	Qty	Description
1	1	Hygrostat, width 42 mm, height 64.5 mm, depth 38 mm; clip-on attachment for 35 mm DIN rail EN 50022
2	1	User manual

Order Information

Description	Part no.
Hygrostat, fixed, 65 % air humidity	60715-138
Hygrostat, adjustable, 40 ... 90 % air humidity	60715-213
Accessories	
DIN rail (EN 50022) Item 3 35 mm; length 75 mm; with fixing materials kit, PU 1 set	21120-178
Connection cable Item 4 SCHUKO/UTE connector, cable length 1.5 m; connection on thermostat/hygrostat, 2-pin, ferrules; connection on fan IEC socket; 1 piece	62150-201
Connection cable Item 4 SCHUKO/UTE connector, cable length 1.5 m; connection on thermostat/hygrostat, 2-pin, ferrules; connection on fan/heater, 3-pin, ferrules, 1 piece	62150-264

Technical data

Supply voltage	**230 V_{AC}, 50/60 Hz**
Default setting for relative air humidity	65 % fixed 40 ... 90% adjustable
Switch difference	5 % air humidity (w 1 % air humidity tolerance at 25 °C)
Switch contact	Changeover contact (relay)
Lifespan	> 50,000 cycles
Max. switching capacity	8 A (16 A for 10 s)
Mains supply	2-pin terminal, up to 2.5 mm^2, torque max. 0.5 Nm
Output change-over relay	3-pin terminal, up to 2.5 mm^2, torque max. 0.5 Nm
Case	Plastic, in accordance with UL 94 V-0, light gray
Dimensions	Height 64.5 mm, width 42 mm, depth 38 mm
Type of assembly	Clip for 35 mm DIN rail, EN 50022
Weight	65 g
Operating/storage temperature	0 ... +60 °C/-20 ... +70 °C
Max. storage humidity	90 % air humidity (non-condensing)
Type of protection	IP 20

Climate control – Accessories

IEC input plug

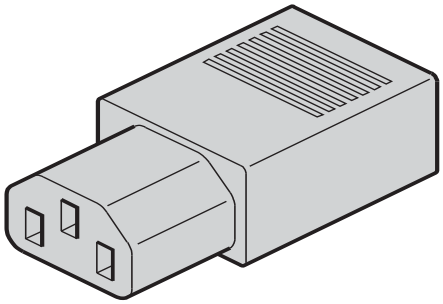

KTA45246

- For connection of fans
- Bolted housing made of heat-resistant plastic (UL 94 V-0)
- 10 A/250 V_{AC}, protection class I

Order Information

Description	Part no.
IEC input plug	**60715-046**

Climate control – Service

Products / cooling concepts

Product	Closed cabinet	Raised cover, ventilation slots	Perforated doors	19" circulation fan, top cover fan
Cooling principle	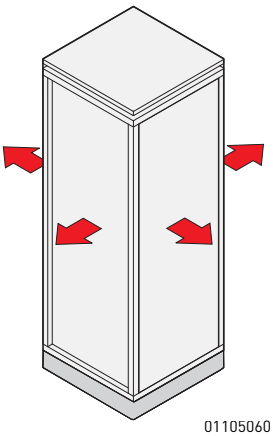 01105060	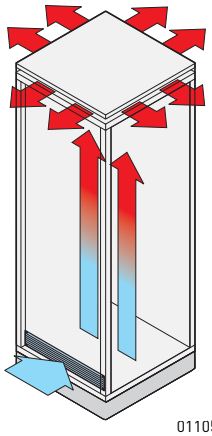 01105058	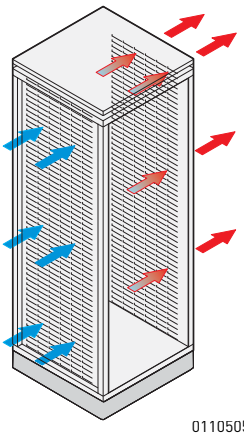 01105056	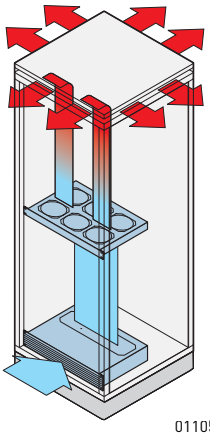 01105057
Description	Natural convection through thermal radiation	Free convection through top opening	Free convection through openings in doors/rear panels	Cooling with air
Type of protection	≤ IP 55	≤ IP 20	≤ IP 20	≤ IP 20
Noise level approx.	0	0	55 ... 65 dB(A)	34 ... 67 dB(A)
Environmental conditions	$T_i > T_a$	$T_i > T_a$	$T_i > T_a$	$T_i > T_a$
Cooling capacity approx. [1]	< 500 W	500 W ... 800 W	500 W ... 6000 W [2]	< 2000 W

1) depending on cabinet size, electronic components, location and room cooling concept
2) > 800 W are only possible with own, active cooling through components like servers, etc.
T_i = cabinet inner temperature T_a = cabinet ambient temperature

FloTHERM simulation

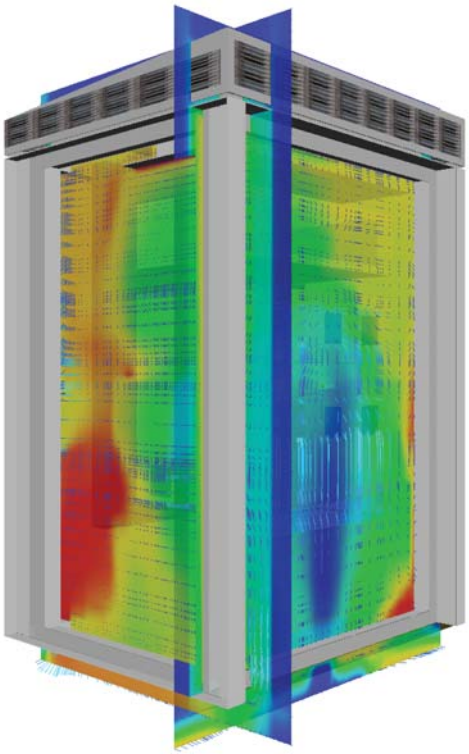
01103050

Project support from simulation software
FloTHERM simulation software allows to detect hot spots and problem areas from the concept phase.
Cooling concepts for assemblies through to complete case/cabinet systems can thus be analysed in advance.

Our FloTHERM experts support you in developing your concept.

Your advantage:
- Extensive analyses eliminate problems during the concept/ prototype phase
- Short development times
- High performance and reliability for your systems

Climate control – Service

Products/cooling concepts

Product	Air filtered fans	Air conditioners	Air/water heat exchanger (LHX 3)	Air/water heat exchanger (LHX 20/40)
Cooling principle	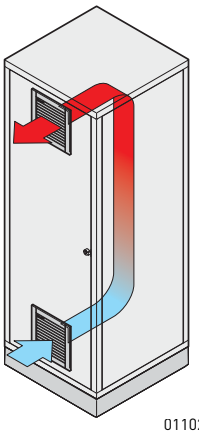 01102050	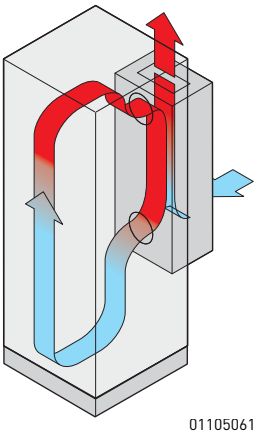 01105061	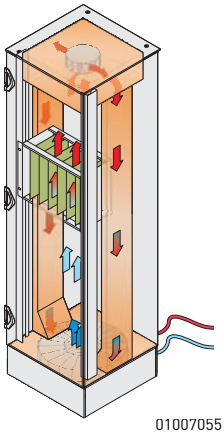 01007055	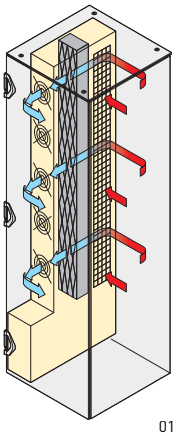 01005081
Description	Cooling with air	Cooling with coolant	Cooling with water	Cooling with water
Type of protection	⩽ IP 55	⩾ IP 55	⩾ IP 55	⩾ IP 55
Noise level	39 ... 71 dB(A)	60 ... 81 dB(A)	45.2 dB(A)	50 ... 70 dB(A)
Environmental conditions	$T_i > T_a$	$T_a \leqslant 55$ °C	$T_a \leqslant 70$ °C	$T_a \leqslant 70$ °C
Cooling capacity approx. [1]	< 1500 W	< 17000 W	< 3000 W	< 40000 W

1) depending on cabinet size, electronic components, location and room cooling concept
T_i = cabinet inner temperature T_a = cabinet ambient temperature

Optimal test equipment

01112001

Climate bay testing

Being part of the Pentair group, Schroff and McLean look back on 50 years of experience and are reknown around the world for their expertise in efficient cooling of industrial facilities and equipment.

Based on our own laboratory test chambers with the most modern equipement in Europe, America and Asia:

- Walk-in climate chamber to test and optimize completely integrated cabinets and systems under different conditions
- Smaller climate chambers to test components
- Airflow and air resistance measurements in a wind tunnel
- Noise level measurements
- Tests in accordance with DIN EN 60529 to determine the type of protection (IP)

Outstanding standard products, flexible custom solutions, global technical support and service add up to a 'cool' combination!

Content

Cabinets 1
Wall mounted cases 2
Accessories for cabinets and wall mounted cases . 3
Climate control . 4
Electronics cases 5
Subracks/ 19" chassis 6
Front panels, plug-in units . . . 7
Systems 8
Power supply units 9
Backplanes . . . 10
Connectors, front panel component system 11
Appendix 12

Desk-top cases – Overview

ratiopac PRO

The universal case with 19" compatible dimensions e.g. for CompactPCI and VME64x applications
- Aluminium case
- Height 2 ... 7 U
- High EMC shielding

propac PRO

The robust case for 19" compatible or custom electronics assemblies
- Aluminium case with aluminium frame front
- Height 2 ... 6 U
- High EMC shielding

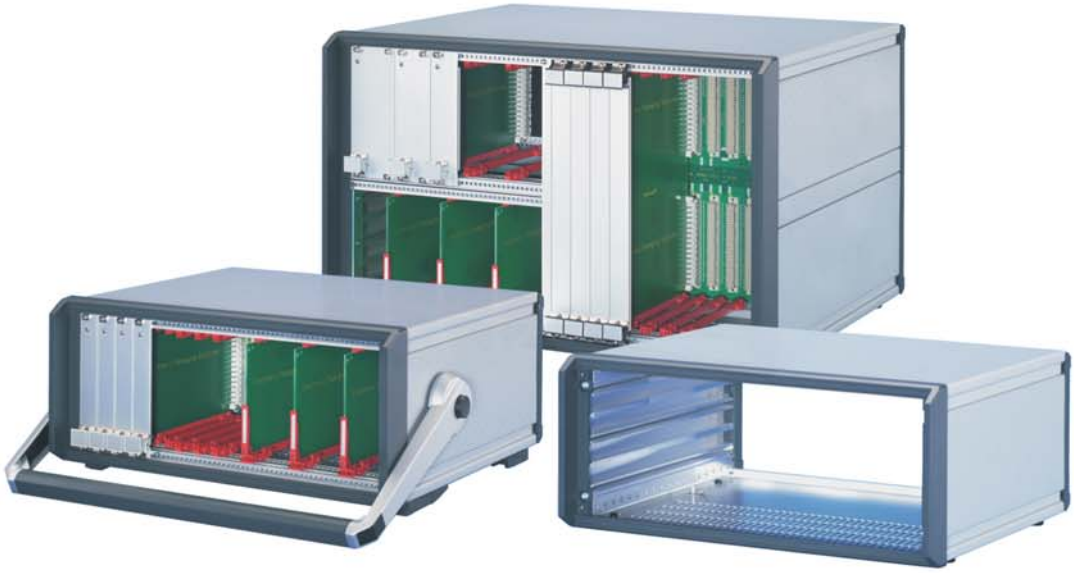

361009005 (12304003 10005004 05802001 06803006 05809001)

Desk-top cases – Overview

Overview 5.0

Introduction 5.2

ServicePLUS ... 5.4

ratiopacPRO ... 5.6

propacPRO 5.44

compacPRO 5.76

comptec 5.100

Accessories
Handles 5.108
Strap handles 5.111
Tip-up carrying handles 5.112
Folding handles .. 5.113
Tray handles 5.114
Feet 5.115

ServicePLUS ... 5.4

compacPRO

Desk-top or portable case
Design alternative to propacPRO
- Front and rear frame in aluminium
- Aluminium case
- Height 2 ... 6 U
- For 19" components or individual electronics assemblies

comptec

Case to house
19" subracks or 19" chassis
- Case with aluminium frame to front and rear
- High stability
- Height 3 ... 12 U
- Identical front and rear
- Internal mounting up to 40 kg
- Protection class IP 20

Accessories

36109006 (02004001 02202003 05806006 02992004 05806008)

Desk-top cases – Introduction

Case types: Desk-top enclosure/19" case

01810002

Desk-top enclosure, ratiopacPRO

02202004

19" case, comptec

Desk-top enclosures

Our desk-top cases are used to house PCBs (euroboards) or individual components

The choice is yours:

- ratiopacPRO, the universal case with 19" compatible dimensions and high EMC shielding, e.g. for CompactPCI and VME64x applications
- propacPRO, the robust case with high EMC shielding for 19"-compatible or custom electronics assemblies
- compacPRO, Desk-top or portable case for unshielded applications

19" cases

Our comptec cases are comparable with small cabinets and are used to house 19" components such as subracks, 19" fan trays or 19" front panels

All desk-top enclosures have a very low weight owing to the materials used and are also suitable for mobile use

Applications for desk-top enclosures

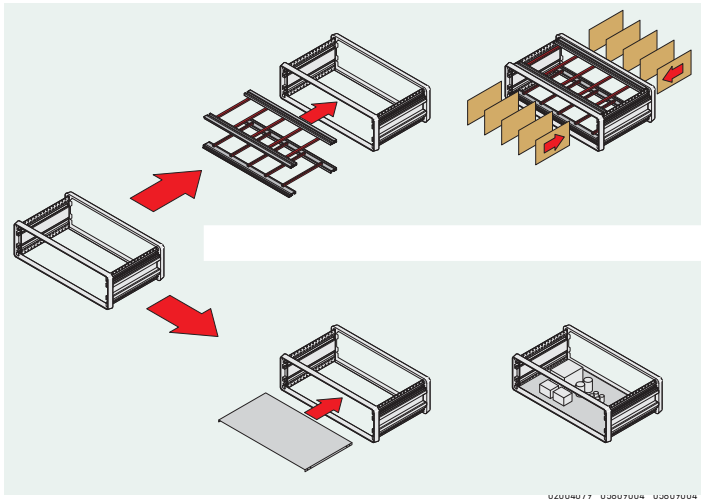

Example above: for euroboards, below: for individual installation

The most important user domains for desk-top enclosures are:

- Fitting with euroboards in accordance with IEC 60297

- Fitting with individual electrical or mechanical components, e.g.on mounting plates

One product platform and extensive accessories

05806008

05806006

02005003

02005006

- Practical technology without time-consuming assembly. The modular product platform of these cases allows a wide range of possible uses with only a small number of components.

  The intelligent design of all components results in an astonishingly quick and easy assembly of the components.

  With our PRO product platform we offer you full compatibility of all individual components and accessories, also with our europacPRO subracks.

  Standard desk-top enclosures can also be adapted easily and with little effort for mobile applications.

Desk-top cases – Introduction

Forms of delivery for desk-top enclosures

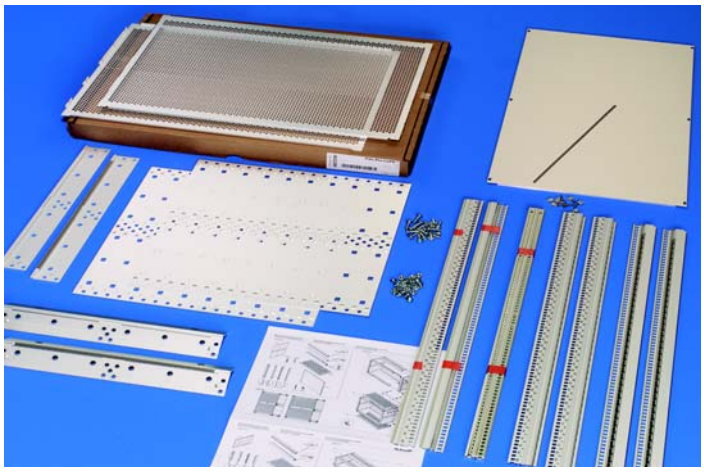

06104001

Flat pack delivery to save space

Supplied in space-saving packs. Simply unpack parts and screw together - done.

Depending on the kit chosen the threaded insert, the perforated rail or the EMC gasket is pre-assembled on the horizontal rail.

We offer you three forms of delivery:

- Pre-assembled kit for use with 160 mm deep euroboards, frame fitted, cladding parts and guide rails supplied loose.
- Pre-assembled kit for individual configuration, frame assembled, cladding parts supplied loose.
- Ready assembled cases to your specifications. With our ServicePLUS option you can order ready-assembled cases, with drilled holes and cut-outs and individual front panels - if necessary even by express service.

Guide rail

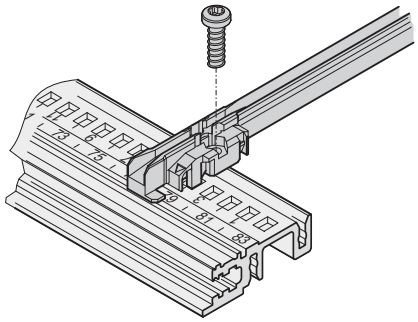

06108084

- Guide rails form the interface between the mechanics of the case and the electronics assembled (PCBs, plug-in units, frame type plug-in units, drive unit modules, etc.).

  Robust snap-in fixings on the plastic rails assure that the components are held securely, even when exposed to vibrations.

  Guide rails can also be screwed on.

EMC and ESD

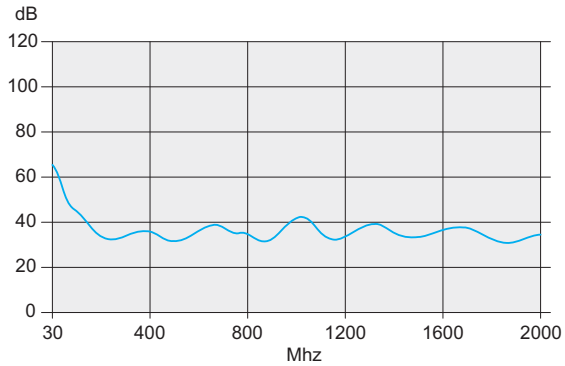

06108081

Shielding

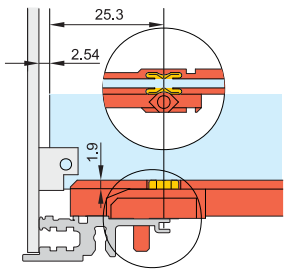

04503050

Position of the ESD clip

- Our case product platforms offer standard solutions for achieving electromagnetic compatibility (EMC) and to avoid electrostatic interference (ESD)
- Shielding on the front and rear of the case is effected by front panels with EMC gaskets
- To prevent electrostatic discharge when inserting PCBs, ESD contacts are clipped into the guide rails. These provide a conductive connection between board and case earth/ground
- Test reports are available on our website www.schroff.biz for download

Desk-top cases – ServicePLUS

configuration

Components can be varied and combined freely

Simple. Fast. For the product you want.

- Online configuration: www.schroff.co.uk/configuration

assembly

Fitting of all mechanical, electrical and electronic components by our specialists

Assembled by professionals. Double benefit!

- Professional and reliable, without extra costs
- Ready for despatch within 10 working days

modification

Custom drillings, cut-outs and special colours for off-the-shelf products

Small changes. Large impact.

- CAD data are available for you to download and further modify from our website www.schroff.biz
- Ready for despatch within 10 working days

solution

Integration and custom developments

Simple. Fast. From one source.

- Flowtherm simulation to calculate heat paths; verification in our own climate lab
- Special sizes, custom solutions

express

Delivery time to customer's request

When fast has to be faster.

- ServicePLUS assembly ready for despatch within 10 working days
- ServicePLUS modification and ServicePLUS solution ready for despatch within 15 working days

academy

Knowledge transfer and partnership

Knowledge. Sharing. Partnerships.

- Seminars held centrally or at your site.
- CAD drawings, test reports, user manuals

Desk-top cases – ServicePLUS

Application examples

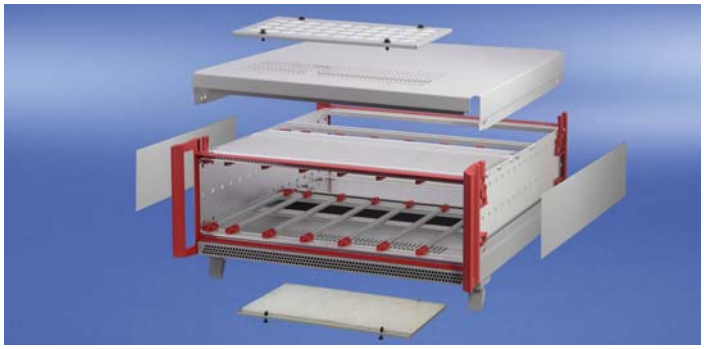

01809001

Application: ratiopacPRO-air case in special colour, shielded board cage, filter mat top and bottom

01809003

Application: ratiopacPRO-air case with processed front and rear panels

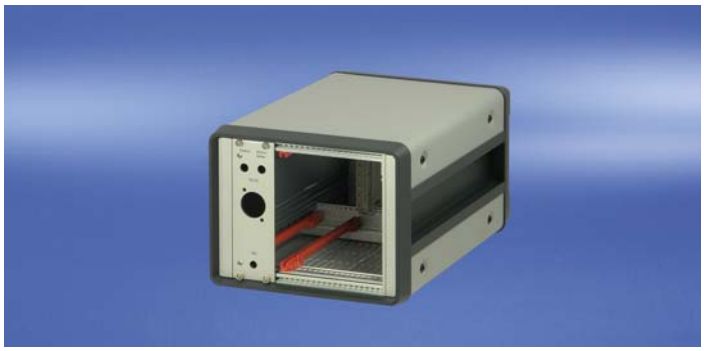

02009001

Application: compacPRO case, modified

02009003

Application: compacPRO case with fitted horizontal rail with lip and hinged front panel

02009002

Application: compacPRO case with fitted horizontal rail with lip and folding front panel

02009004

Application: compacPRO with tip-up carrying handle and front panel (without visible screws)

02109001

Application: inpac case with hinged and modified front and rear panels

05809005

Application: propacPRO, EMC case in special colour with mounting plates for individual construction

Desk-top cases – Introduction

Case types: Desk-top enclosure/19" case

01810002

Desk-top enclosure, ratiopacPRO

02202004

19" case, comptec

Desk-top enclosures

Our desk-top cases are used to house PCBs (euroboards) or individual components

The choice is yours:

- ratiopacPRO, the universal case with 19" compatible dimensions and high EMC shielding, e.g. for CompactPCI and VME64x applications
- propacPRO, the robust case with high EMC shielding for 19"-compatible or custom electronics assemblies
- compacPRO, Desk-top or portable case for unshielded applications

19" cases

Our comptec cases are comparable with small cabinets and are used to house 19" components such as subracks, 19" fan trays or 19" front panels

All desk-top enclosures have a very low weight owing to the materials used and are also suitable for mobile use

Applications for desk-top enclosures

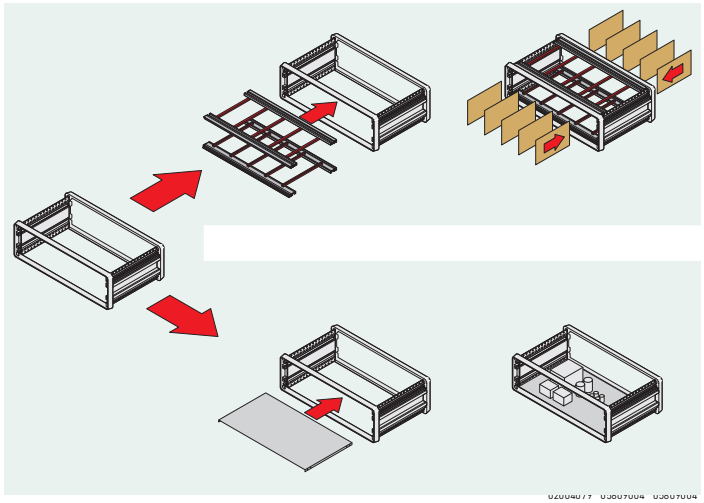

Example above: for euroboards, below: for individual installation

The most important user domains for desk-top enclosures are:

- Fitting with euroboards in accordance with IEC 60297

- Fitting with individual electrical or mechanical components, e.g.on mounting plates

One product platform and extensive accessories

05806008

05806006

02005003

02005006

- Practical technology without time-consuming assembly. The modular product platform of these cases allows a wide range of possible uses with only a small number of components.

  The intelligent design of all components results in an astonishingly quick and easy assembly of the components.

  With our PRO product platform we offer you full compatibility of all individual components and accessories, also with our europacPRO subracks.

  Standard desk-top enclosures can also be adapted easily and with little effort for mobile applications.

Desk-top cases – Introduction

Forms of delivery for desk-top enclosures

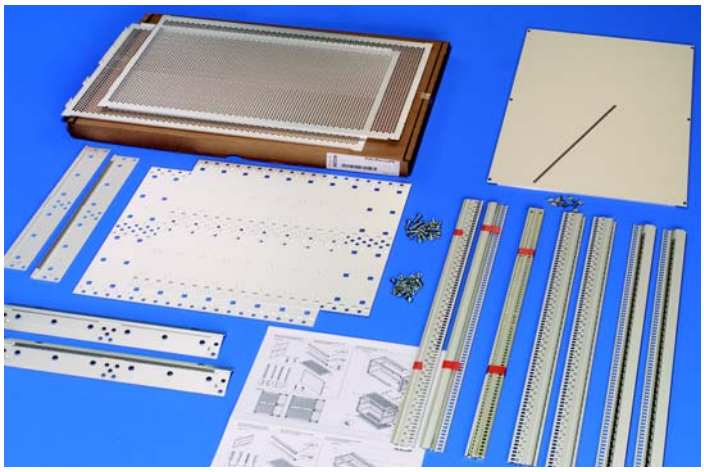

06104001

Flat pack delivery to save space

Supplied in space-saving packs. Simply unpack parts and screw together - done.

Depending on the kit chosen the threaded insert, the perforated rail or the EMC gasket is pre-assembled on the horizontal rail.

We offer you three forms of delivery:

- Pre-assembled kit for use with 160 mm deep euroboards, frame fitted, cladding parts and guide rails supplied loose.
- Pre-assembled kit for individual configuration, frame assembled, cladding parts supplied loose.
- Ready assembled cases to your specifications. With our ServicePLUS option you can order ready-assembled cases, with drilled holes and cut-outs and individual front panels - if necessary even by express service.

Guide rail

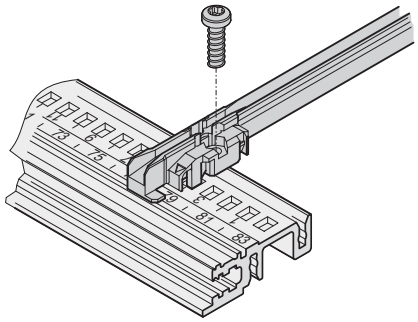

06108084

- Guide rails form the interface between the mechanics of the case and the electronics assembled (PCBs, plug-in units, frame type plug-in units, drive unit modules, etc.).

  Robust snap-in fixings on the plastic rails assure that the components are held securely, even when exposed to vibrations.

  Guide rails can also be screwed on.

EMC and ESD

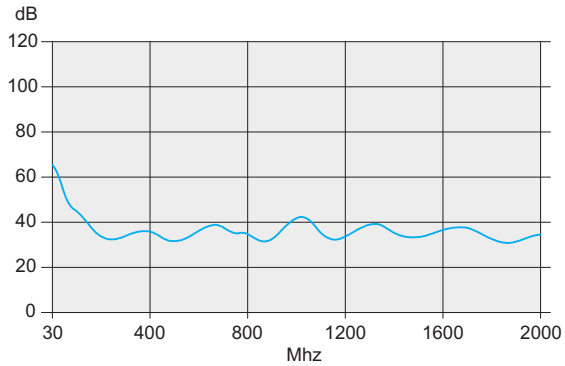

06108081

Shielding

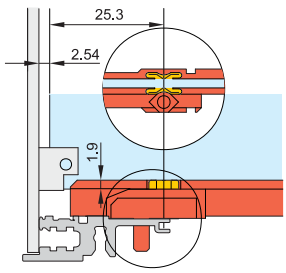

04503050

Position of the ESD clip

- Our case product platforms offer standard solutions for achieving electromagnetic compatibility (EMC) and to avoid electrostatic interference (ESD)
- Shielding on the front and rear of the case is effected by front panels with EMC gaskets
- To prevent electrostatic discharge when inserting PCBs, ESD contacts are clipped into the guide rails. These provide a conductive connection between board and case earth/ground
- Test reports are available on our website www.schroff.biz for download

Desk-top cases – ServicePLUS

configuration

Components can be varied and combined freely

Simple. Fast. For the product you want.

- Online configuration: www.schroff.co.uk/configuration

assembly

Fitting of all mechanical, electrical and electronic components by our specialists

Assembled by professionals. Double benefit!

- Professional and reliable, without extra costs
- Ready for despatch within 10 working days

modification

Custom drillings, cut-outs and special colours for off-the-shelf products

Small changes. Large impact.

- CAD data are available for you to download and further modify from our website www.schroff.biz
- Ready for despatch within 10 working days

solution

Integration and custom developments

Simple. Fast. From one source.

- Flowtherm simulation to calculate heat paths; verification in our own climate lab
- Special sizes, custom solutions

express

Delivery time to customer's request

When fast has to be faster.

- ServicePLUS assembly ready for despatch within 10 working days
- ServicePLUS modification and ServicePLUS solution ready for despatch within 15 working days

academy

Knowledge transfer and partnership

Knowledge. Sharing. Partnerships.

- Seminars held centrally or at your site.
- CAD drawings, test reports, user manuals

Desk-top cases – ServicePLUS

Application examples

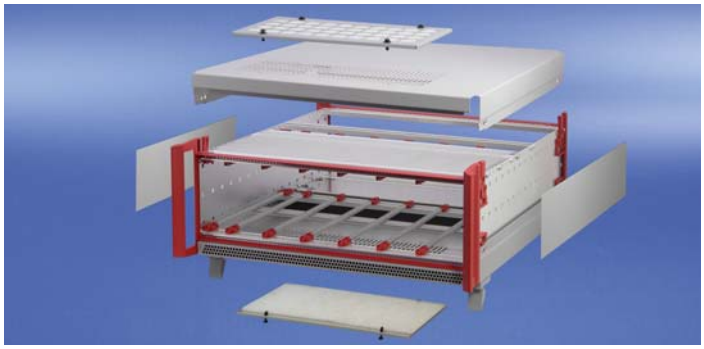

01809001

Application: ratiopacPRO-air case in special colour, shielded board cage, filter mat top and bottom

01809003

Application: ratiopacPRO-air case with processed front and rear panels

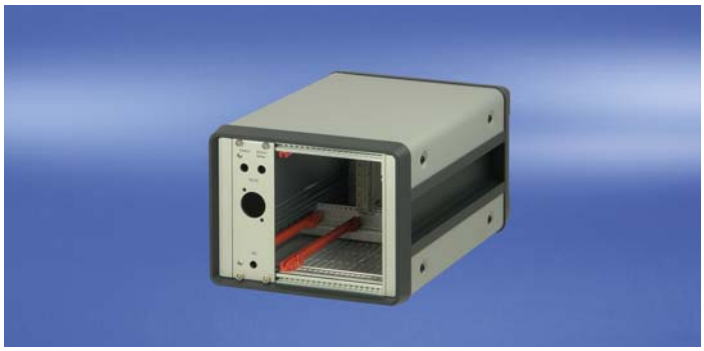

02009001

Application: compacPRO case, modified

02009003

Application: compacPRO case with fitted horizontal rail with lip and hinged front panel

02009002

Application: compacPRO case with fitted horizontal rail with lip and folding front panel

02009004

Application: compacPRO with tip-up carrying handle and front panel (without visible screws)

02109001

Application: inpac case with hinged and modified front and rear panels

05809005

Application: propacPRO, EMC case in special colour with mounting plates for individual construction

Content

Desk-top cases – ratiopacPRO

Cabinets 1
Wall mounted cases 2
Accessories for cabinets and wall mounted cases . 3
Climate control . 4
Electronics cases 5
Subracks/ 19" chassis 6
Front panels, plug-in units . . . 7
Systems 8
Power supply units 9
Backplanes . . . 10
Connectors, front panel component system 11
Appendix 12

06800002

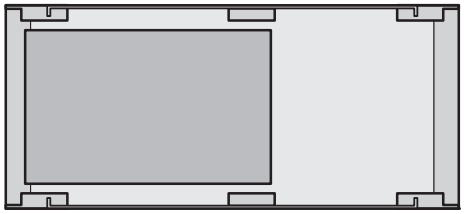

ratiopacPRO
Designed for insertion/extractor handles in accordance with IEC 60297-3-102 and IEEE 1101.10 for CompactPCI and VME64x applications

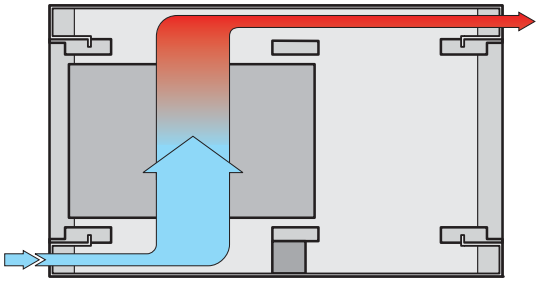

06801005

ratiopacPRO air
Designed for insertion/extractor handles in accordance with IEC 60297-3-102 and IEEE 1101.10 for CompactPCI and VME64x applications; 1 U extra for ventilation (1/2 U top, 1/2 U bottom)

Standards

- Inner and outer dimensions in accordance with:
  IEC 60297-3-101 / IEEE 1101.1
  IEC 60297-3-102 / IEEE 1101.10/11
- Type of protection IP20 in accordance with IEC 60529
- Earthing connections in accordance with:
  DIN EN 50178 / VDE 0160
  DIN EN 60950 / VDE 0805
  DIN EN 61010-1 / VDE 0411 part 1
  DIN EN 61010-1A2 / VDE 0411 part 1/A1
- EMC testing in accordance with VG 95373 part 15

06812001

Case with mounting plate

06800015

Prepared for CompactPCI and VME64x applications

The universal case with 19" compatible dimensions e.g. for CompactPCI, VME64x and other applications

- Base level of shielding in basic versions upwards, additional EMC shielding can be retrofitted
- Symmetrical construction, identical front and rear (identical board cage for ratiopacPRO and ratiopacPRO air)
- Converts simply from desktop to 19" rack-mounted case and back
- No visible screws; cladding parts removable without tools

06800005

ratiopacPRO

- Case with cover strip, front handles or 19" brackets (height 2 U ... 6 U)
- Complete case with cover strip and pre-mounted components, with basic shielding (height 3 U, 6 U), additional EMC shielding retrofittable
- Tower case (width 4 U)

06803002

ratiopacPRO air

- ratiopacPRO air with additional 1 U height for ventilation
- Case with cover strips, front handles or 19" brackets (height 4 U, 5 U, 7 U)
- Complete case with cover strips and pre-mounted components, with basic shielding (height 4 U, 7 U), additional EMC shielding retrofittable

30407004

ServicePLUS from page 5.4

e.g. modifications (special colours or sizes)
e.g. custom solutions (cut-outs in top cover, base plate or side panels)
e.g. assembly service from 1 piece

www.schroff.biz/ServicePLUS

ratiopacPRO
Complete cases .. 5.8
Dimensions 5.9
Cases 5.10
Tower cases 5.12

ratiopacPRO air
Cases 5.14
Complete cases .. 5.13
Dimensions 5.16
Radial fan units .. 5.17
EMC gasketing ... 5.18

Accessories
Front panels 5.21
Rear panels 5.22
Feet 5.23
Air filters 5.23
GND/earthing kit 5.24
Front handles 5.24
19" brackets 5.25
Cable holder..... 5.26
Compartment seals..... 5.26
Strap handles 5.26
Tip-up carrying handles 5.27
Assembly kit..... 5.28
Fitting position of horizontal rails ... 5.29
Horizontal rails... 5.31
Threaded inserts, perforated strips, insulation strips .. 5.35
Z-rails, perforated rails..... 5.35
Divider plates 5.36
Mounting plates .. 5.37
Horizontal board assembly 5.38
Combined mounting 5.39
Guide rails and ESD clips 5.40

ServicePLUS ... 5.4

ratiopacPRO complete cases

06812003

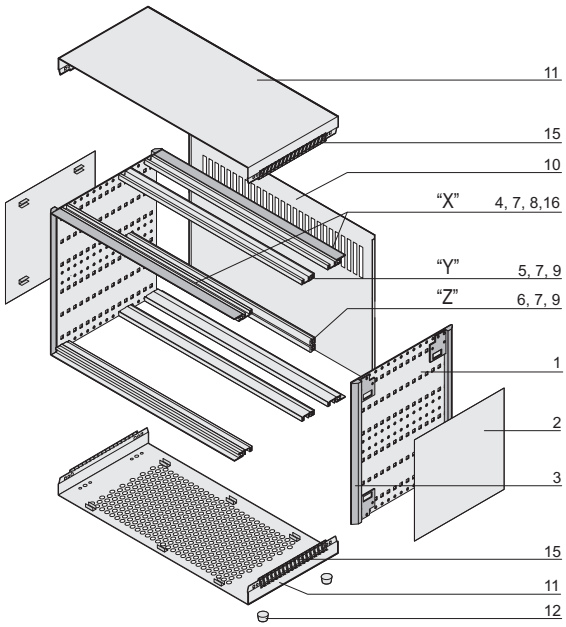

01802050

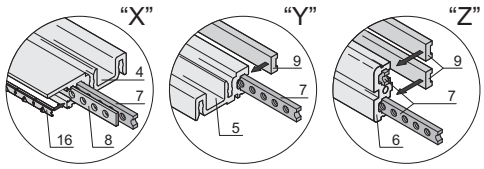

01808055

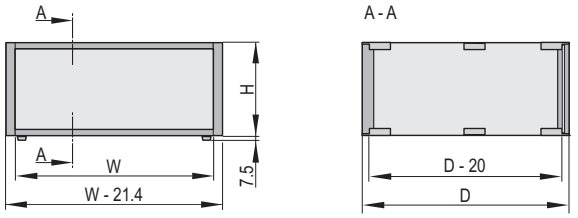

01808051

3 U

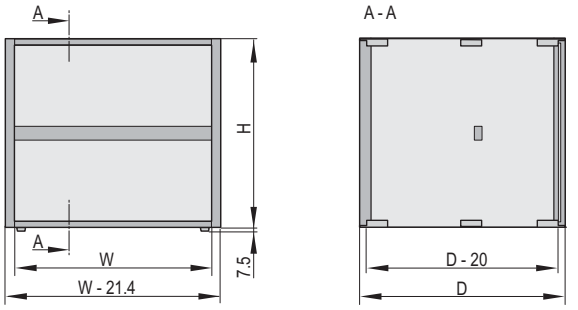

01808052

6 U

- Desk-top enclosure with pre-configured components, in accordance to IEC 60297-3-101; prepared for 19" components, e.g. plug-in units and euroboards
- Ventilation slit in base plate
- Rear panel perforated

Delivery comprises (in kit form)

Item	Qty without EMC	Qty with EMC	Description
1	2	2	Side panel, Al, 2 mm, passivated
2	2	2	Side plate, Al, 1 mm, visible surfaces RAL 9006
3	4	4	Cover strip, Al die-cast, RAL 7016, pre-fitted only on EMC version
4	4	4	Horizontal rail, type H-LD, Al, visible surfaces RAL 7016
5	2	2	Horizontal rail, centre (top/bottom), type H-ST, Al
6	1	1	Horizontal rail, centre (on 6 U only), type ST, Al
7	6/8	6/8	3 U/6 U: threaded inserts, St, pre-mounted, for indirect backplane mounting with insulation strips
8	–	4	Perforated strip, Al, 1 mm, pre-fitted
9	4	4	Insulation strip, PBT, UL 94 V-0
10	1	1	Rear panel, perforated, Al, 2.5 mm
11	2	2	Top cover and base plate, Al, 1 mm, internal surfaces conductive, visible surfaces RAL 9006, with GND/earthing connection, base plate with honeycomb grid ventilation
12	4	4	Case foot with anti-slip protection, UL 94 V-0, PC black
14	–	1	EMC support profile for side panel, pre-mounted (kit)
15	–	4	EMC contact strip for cover plate, pre-mounted (kit)
16	–	4	EMC contact strip front panel - horizontal rails
17	1	1	GND/earthing kit, assembly kit

Order Information

Height H	Width W	Depth D	Unshielded	EMC shielded
U	HP	mm	Part no.	Part no.
3	28	255.5	**24572-001**	**24572-050**
3	42	255.5	**24572-002**	**24572-051**
3	42	315.5	**24572-003**	**24572-052**
3	63	315.5	**24572-004**	**24572-053**
3	84	315.5	**24572-005**	**24572-054**
3	84	375.5	**24572-006**	**24572-055**
3	84	435.5	**24572-007**	**24572-056**
6	42	315.5	**24572-015**	**24572-064**
6	63	315.5	**24572-016**	**24572-065**
6	84	315.5	**24572-017**	**24572-066**
6	84	375.5	**24572-018**	**24572-067**
6	84	435.5	**24572-019**	**24572-068**

Note

- Dimension drawings and mounting depths see page 5.9
- Components see page 5.18
- Front handles and 19" mounting brackets from page 5.24
- Guide rails from page 5.40

ServicePLUS see page 5.4

Desk-top cases – ratiopacPRO

Dimension drawings RatiopacPRO

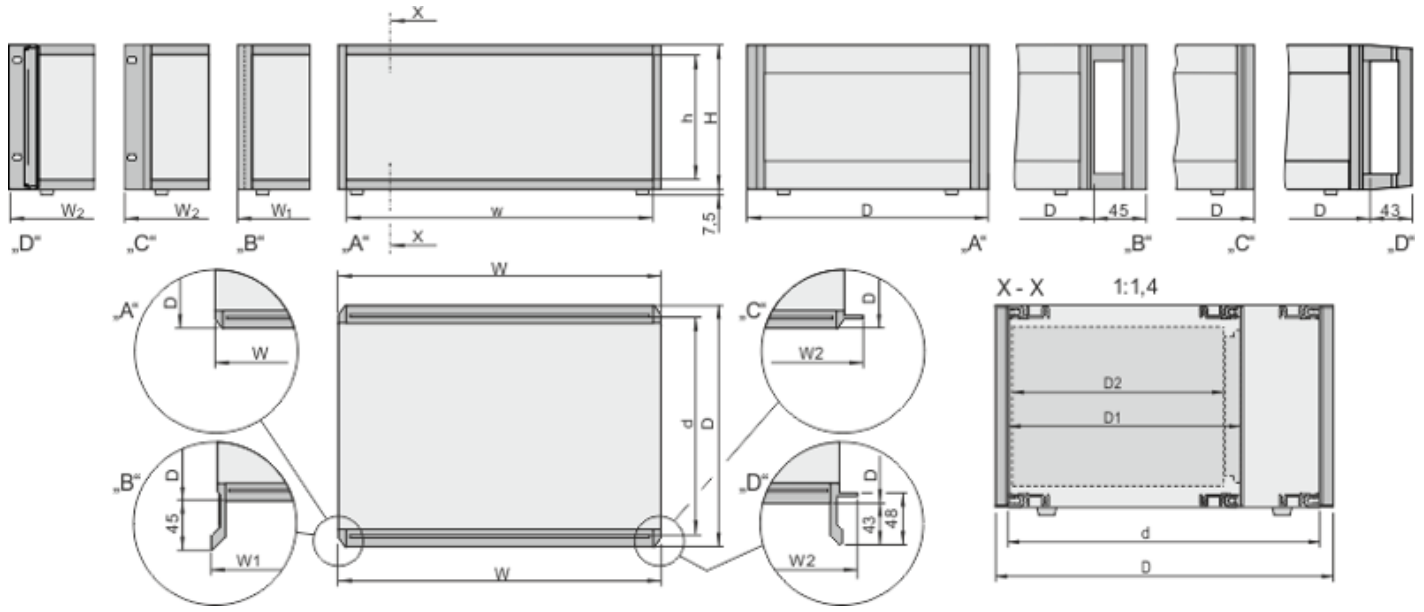

rppr6637

RatiopacPRO with A - bezel; B - front handle; C - 19" mounting bracket; D - 19" mounting bracket with front handle

Dimensions table RatiopacPRO

Height			Width					Depth			
H		h	w	W	w1	w2	w	D	d	D1	d2
in U	in mm	in mm	in HP	in mm	in mm	in mm	in mm	Total depth in mm	Useable depth in mm	Plug-in depth in mm	Board depth in mm
2	88.10	67.90	28	164.42	177.62	198.12	142.82	255.5	235.5	175.5	160
			42	235.54	248.74	269.24	213.94			235.5	220
			63	342.42	355.42	375.92	320.62	315.5	295.5	175.5	160
			84	448.90	462.10	482.60	427.30			235.5	220
3	132.55	112.35	28	164.42	177.62	198.12	142.82			295.5	280
			42	235.54	248.74	269.24	213.94	375.5	355.5	175.5	160
			63	342.42	355.42	375.92	320.62			235.5	220
			84	448.90	462.10	482.60	427.30			295.5	280
4	177.00	156.80	28	164.42	177.62	198.12	142.82			355.5	340
			42	235.54	248.74	269.24	213.94	435.5	415.5	175.5	160
			63	342.42	355.42	375.92	320.62			235.5	220
			84	448.90	462.10	482.60	427.30			295.5	280
5	221.45	201.25	28	164.42	177.62	198.12	142.82			355.5	340
			42	235.54	248.74	269.24	213.94	495.5	475.5	175.5	160
			63	342.42	355.42	375.92	320.62			235.5	220
			84	448.90	462.10	482.60	427.30			295.5	280
6	265.90	245.70	28	164.42	177.62	198.12	142.82			355.5	340
			42	235.54	248.74	269.24	213.94				
			63	342.42	355.42	375.92	320.62				
			84	448.90	462.10	482.60	427.30				

Components mountable in 15 mm depth grid

Desk-top cases – ratiopacPRO

RatiopacPRO case

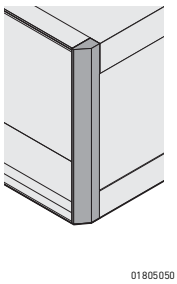

3a: Bezel

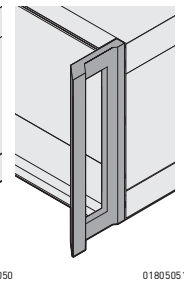

3b: Front handle

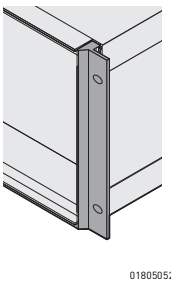

3c: 19" mounting bracket

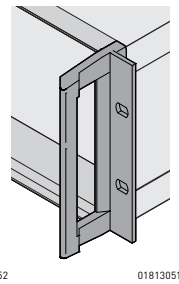

3d: 19" mounting bracket with front handle

- Cases for individual assembly with 19" standard components or specific internal mounting, e.g. with mounting plate
- Unshielded (EMC shielding retrofittable)
- Symmetrical design, identical front and rear side
- Four versions:
  - Bezels
  - Front handles
  - 19" mounting brackets
  - 19" mounting brackets with front handles
- For board depth 160 mm, 220 mm, 280 mm, and 340 mm (depending on case depth)

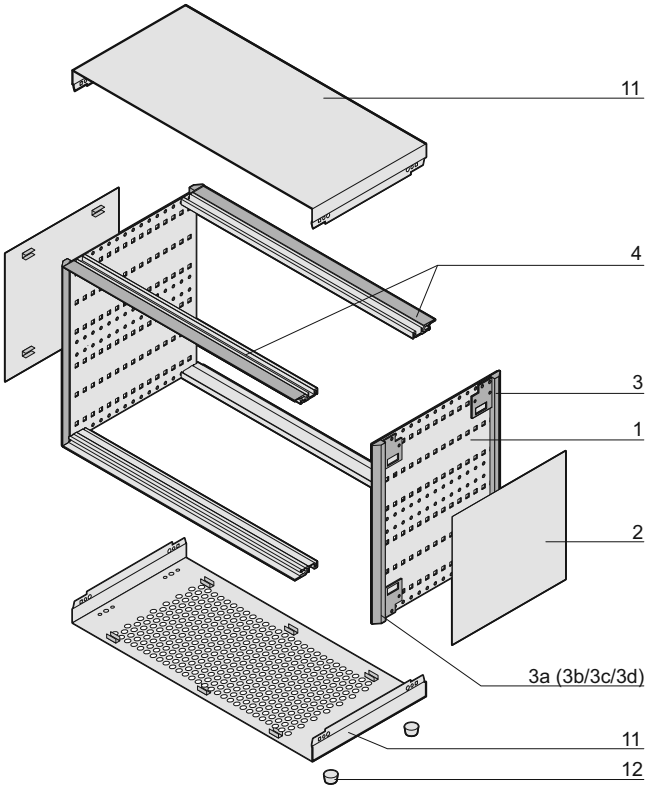

Drawing with front cover strip

ServicePLUS see page 5.4

Delivery comprises (kit)

Item	Qty	Description
1	2	Side panel, Al, 2 mm, chromated
2	2	Side plate, Al, 1 mm, visible surfaces powder-coated, RAL 9006
3	2	Rear trim, Al die-cast, powder-coated, RAL 7016
3a	2	Bezel, Al die-cast, powder-coated, RAL 7016
3b	2	Front handle, Al die-cast, powder-coated, RAL 7016
3c	2	19" mounting bracket, Al diecast, powder-coated, RAL 7016
3d	2	19" mounting bracket with front handle, Al diecast, powder-coated, RAL 7016
4	4	Horizontal rail, type H-LD, Al, visible surfaces powder-coated, RAL 7016
11	2	Top cover and base plate, Al, 1 mm, inner sides conductive, visible surfaces powder-coated, RAL 9006, with GND/earthing connections, base plate with honeycomb grid ventilation
12	4	Case foot with anti-slip protection, UL 94 V-0, PC black
13	1	Fixing materials kit

3a, 3b, 3c or 3d according to selection

Note

- Order information, see following page

Order Information

Accessories	
Earthing kit CU wire, 1.5 mm^2, PVC sleeve, green/yellow, 1 kit	**24571-380**
Al diecast foot with tip-up silver, 1 piece (SPQ 10)	**10603-002**
Plastic tip-up foot silver, similar to RAL 9006, PU 4 pieces	**20603-001**
Plastic tip-up foot anthracite, similar to RAL 7016, 4 pieces	**20603-002**
Stacking aid silver, similar to RAL 9006, PA, UL 94 V-0, PU 4 pieces	**20603-004**
Stacking aid anthracite, similar to RAL 7016, PA, UL 94 V-0, PU 4 pieces	**20603-003**

Desk-top cases – ratiopacPRO

RatiopacPRO case

	Width W HP	Depth D mm	Case height H 2 U Part no.	Part no.	Part no.	Part no. Side panel subdivision (1 U-3 U-1 U)	Part no. (3 U-2 U)	Part no.
Cover strips	28	255.5	24572-500	24571-002	24571-050	24572-117	24572-261	24571-098
	28	315.5	24572-503	**24571-005**	24571-053	24572-120	24572-264	24571-101
	42	255.5	24572-510	**24571-014**	24571-062	24572-129	24572-273	24571-110
	42	315.5	**24572-513**	**24571-017**	24571-065	24572-132	24572-276	24571-113
	42	255.5	24572-514	24571-018	24571-066	24572-133	24572-277	24571-114
	63	255.5	24572-520	24571-026	24571-074	24572-141	24572-285	24571-122
	63	315.5	24572-523	**24571-029**	24571-077	24572-144	24572-288	24571-125
	63	375.5	24572-524	**24571-030**	24571-078	24572-145	24572-289	24571-126
	84	255.5	24572-530	24571-038	24571-086	24572-153	24572-297	24571-134
	84	315.5	24572-533	**24571-041**	24571-089	24572-156	24572-300	24571-137
	84	375.5	24572-534	**24571-042**	24571-090	24572-157	24572-301	24571-138
	84	435.5	24572-535	**24571-043**	**24571-091**	24572-158	24572-302	24571-139
RPPR6629	84	495.5	24572-536	24571-044	24571-092	24572-159	24572-303	24571-140
Front handles	28	255.5	–	**24571-702**	24571-750	24572-213	24572-357	24571-798
	28	315.5	–	24571-705	24571-753	24572-216	24572-360	24571-801
	42	255.5	–	**24571-714**	24571-762	24572-225	24572-369	24571-810
	42	315.5	–	**24571-717**	24571-765	24572-228	24572-372	24571-813
	42	375.5	–	24571-718	24571-766	24572-229	24572-373	24571-814
	63	255.5	–	24571-726	24571-774	24572-237	24572-381	24571-822
	63	315.5	–	**24571-729**	24571-777	24572-240	24572-384	24571-825
	63	375.5	–	24571-730	24571-778	24572-241	24572-385	24571-826
	84	255.5	–	24571-738	24571-786	24572-249	24572-393	24571-834
	84	315.5	–	**24571-741**	24571-789	24572-252	24572-396	24571-837
	84	375.5	–	**24571-742**	24571-790	24572-253	24572-397	24571-838
	84	435.5	–	24571-743	**24571-791**	24572-254	24572-398	24571-839
01805050	84	495.5	–	24571-744	24571-792	24572-255	24572-399	24571-840
19" mounting brackets	84	255.5	24572-570	**24571-438**	**24571-486**	24572-201	24572-345	24571-534
	84	315.5	**24572-573**	**24571-441**	24571-489	24572-204	24572-348	24571-537
	84	375.5	**24572-574**	**24571-442**	24571-490	24572-205	24572-349	24571-538
	84	435.5	**24572-575**	**24571-443**	**24571-491**	24572-206	24572-350	**24571-539**
01805052	84	495.5	24572-576	24571-444	**24571-492**	24572-207	24572-351	24571-540
19" mounting brackets with front handles	84	255.5	24572-620	**24572-630**	**24572-640**	–	–	24572-660
	84	315.5	**24572-623**	**24572-633**	**24572-643**	–	–	**24572-663**
	84	375.5	**24572-624**	**24572-634**	**24572-644**	–	–	**24572-664**
	84	435.5	**24572-625**	**24572-635**	**24572-645**	–	–	**24572-665**
01813051	84	495.5	24572-626	**24572-636**	**24572-646**	–	–	24572-666

Note

- Dimension drawings and mounting depths see page 5.9
- Components see page 5.18

ratiopacPRO tower with 4 U width

06802001

- Symmetrical design, identical front and rear side
- Mounting space 4 U, 84 HP, depth 475 mm
- Case based on ratiopacPRO
- Unshielded (EMC shielding retrofittable)

Delivery comprises (in kit form)

Item	Qty	Description
1	2	Base/top cover, Al, 2 mm, passivated
2	4	Horizontal rail, type H-LD, Al, visible surface powder-coated, RAL 7016
3	4	Cover, Al die-cast, RAL 7016
4	2	Lateral cover plate, Al, 1 mm, with GND/earthing connection, visible surfaces powder-coated, internal surface conductive, RAL 9006
5	1	Top cover plate, Al, 1 mm, visible surface powder-coated, RAL 9006
6	2	Case foot with anti-slip protection, Al, powder-coated, RAL 7016
7	1	Assembly kit

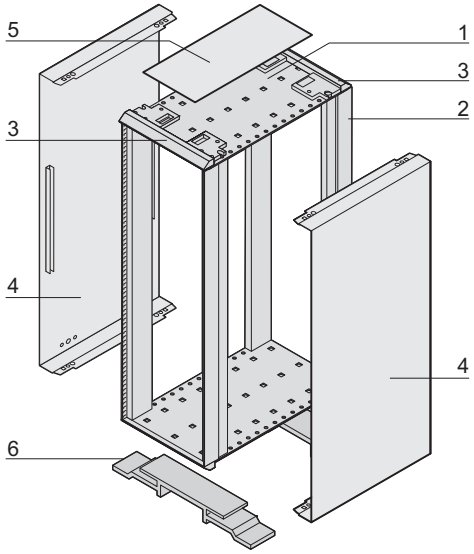

Order Information

Width U	Part no.
4	24571-395

Note

- Components see page 5.18

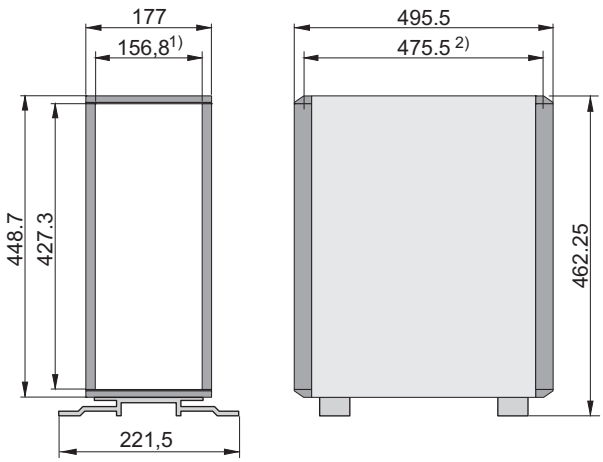

01802054

1) = open space between the horizontal rails
2) = max. mounting depth

ServicePLUS see page 5.4

Desk-top cases – ratiopacPROair

ratiopacPRO air complete cases

06811001

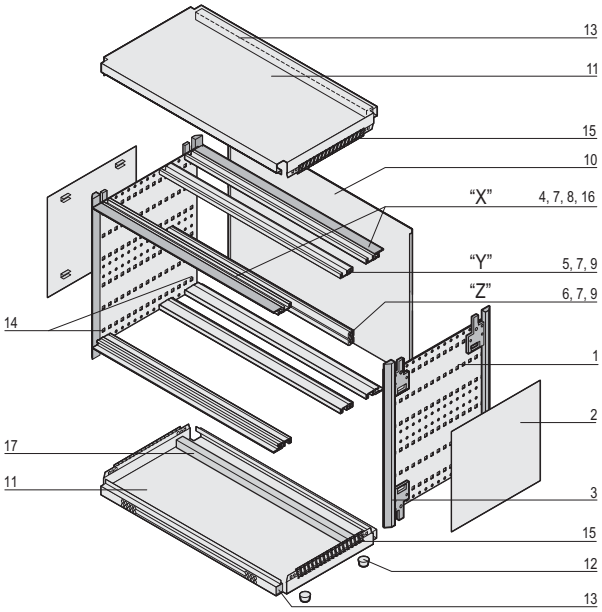

01802052

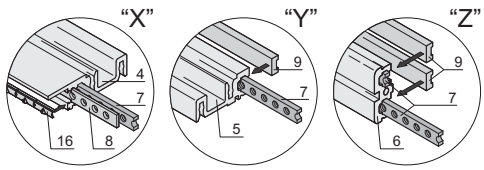

01808055

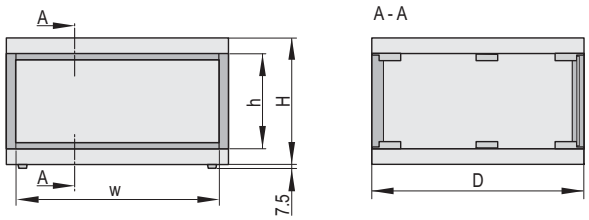

01808053

3 U

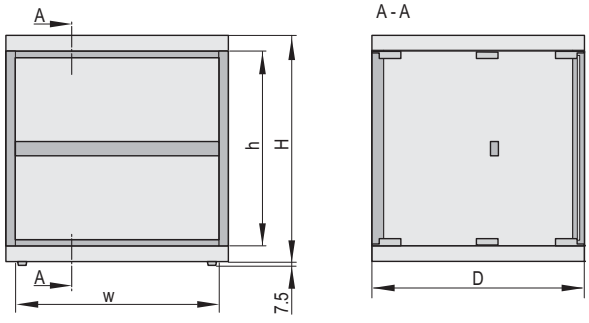

01808054

6 U

- The case has 2 x 1/2 U clearance for ventilation
- Case with cover strip; with pre-mounted components for euroboards and backplane with insulation strip; no visible screws
- Symmetrical design, identical front and rear honeycomb grid ventilation in top cover and base plate
- Available in two versions:
  - unshielded (EMC shielding retrofittable)
  - with EMC shielding fitted

Delivery comprises (in kit form)

Item	Qty without EMC	Qty with EMC	Description
1	2	2	Side panel, Al, 2 mm, passivated
2	2	2	Side plate, Al, 1 mm, visible surface RAL 9006
3	4	4	Cover, die-cast zinc, RAL 7016, pre-mounted on EMC version only
4	4	4	Horizontal rail, type H-LD, Al, visible surface RAL 7016
5	2	2	Horizontal rail, centre (top/bottom), type H-ST, Al
6	1	1	Horizontal rail, centre (on 6 U only), type ST, Al
7	6/8	6/8	4 U/7 U: threaded inserts, St, pre-mounted, for indirect backplane mounting with insulation strips
8	–	4	Perforated strip, pre-mounted
9	4	4	Insulation strip, PBT, UL 94 V-0
10	1	1	Rear panel, Al, 2.5 mm
11	2	2	Top cover and base plate with honeycomb grid ventilation, Al, 1 mm, internal surface conductive, visible surface RAL 9006, with GND/earthing connection
12	4	4	Case foot with anti-slip protection, UL 94 V-0, PC, black
13	2	2	Air filter
14	–	1	EMC support profile for side panel, fitted (kit)
15	–	4	EMC contact strip for cover plate, pre-mounted (kit)
16	–	4	EMC contact strip front panel - horizontal rails
17	1	1	Compartment seal, PE foam, self-adhesive, temperature range -20 °C ... +85 °C
18	1	1	GND/earthing kit, assembly kit

Order Information

Case height H	PCB height h	Width w	Depth D	Unshielded	EMC shielded
U	U	HP	mm	Part no.	Part no.
4	3	28	255.5	**24572-025**	**24572-074**
4	3	42	255.5	**24572-026**	**24572-075**
4	3	42	315.5	**24572-027**	**24572-076**
4	3	63	315.5	**24572-028**	**24572-077**
4	3	84	315.5	**24572-029**	**24572-078**
4	3	84	375.5	**24572-030**	**24572-079**
4	3	84	435.5	**24572-031**	**24572-080**
7	6	42	315.5	**24572-040**	**24572-088**
7	6	63	315.5	**24572-041**	**24572-089**
7	6	84	315.5	**24572-042**	**24572-090**
7	6	84	375.5	**24572-043**	**24572-091**
7	6	84	435.5	24572-044	**24572-092**

Note

- Dimension drawings and mounting depths see page 5.16
- Components see page 5.18
- Front handles and 19" mounting brackets from page 5.24
- Guide rails from page 5.40

ServicePLUS see page 5.4

Desk-top cases – ratiopacPROair

RatiopacPRO air case

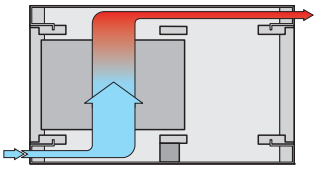

06801005

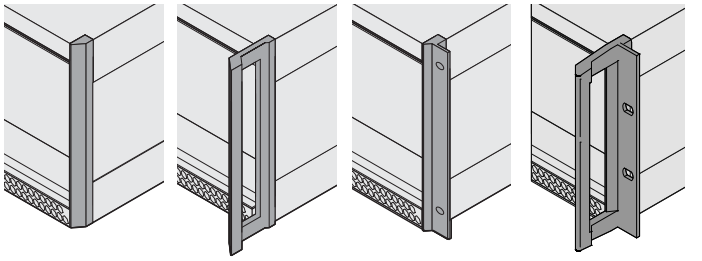

01805055 01805056 01805057 01813057

3a: Bezel | 3b: Front handle | 3c: 19" mounting bracket | 3d: 19" mounting bracket with front handle

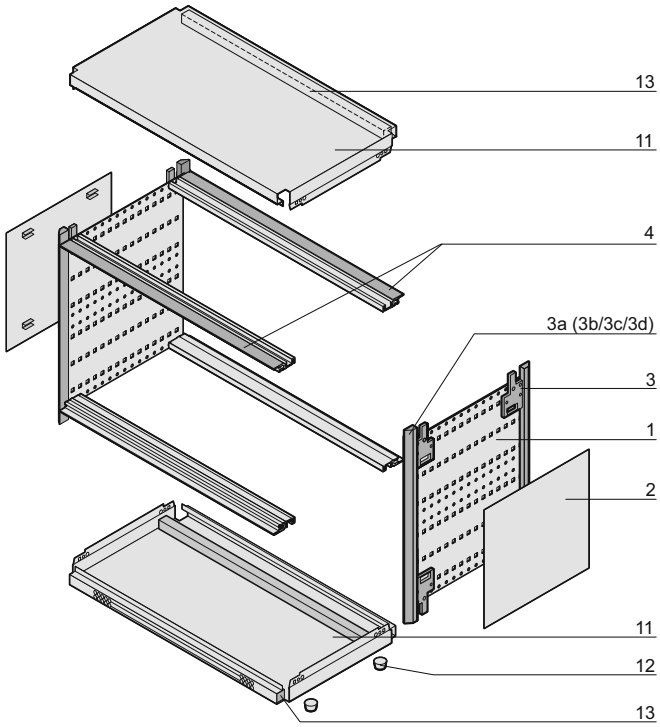

01813066

Drawing with front cover strip

- The case has 2 x 1/2 U clearances for ventilation beneath and above the board cage
- Cases for individual assembly with 19" standard components or specific internal mounting, e.g. with mounting plate
- Unshielded (EMC shielding retrofittable)
- Symmetrical design, identical front and rear side
- For board depth 160 mm, 220 mm, 280 mm, and 340 mm (depending on case depth)
- Online download of 3D CAD data
- Four versions:
  - Bezels
  - Front handles
  - 19" mounting brackets
  - With 19" mounting brackets and front handles

Delivery comprises (in kit form)

Item	Qty	Description
1	2	Side panel, Al, 2 mm, chromated
2	2	Side plate, Al, 1 mm, visible surfaces powder-coated, RAL 9006
3	2	Rear trim, Al die-cast, powder-coated, RAL 7016
3a	2	Bezel, Al die-cast, powder-coated, RAL 7016
3b	2	Front handle, Al die-cast, powder-coated, RAL 7016
3c	2	19" mounting angle, Al die-cast, powder-coated, RAL 7016
3d	2	19" mounting bracket with front handle, Al diecast, powder-coated, RAL 7016
4	4	Horizontal rail, type H-LD, Al, visible surfaces powder-coated, RAL 7016
11	2	1 Top cover and base plate, Al, 1 mm, internal surfaces conductive,visible surfaces powder-coated, RAL 9006, with GND/earthing connection, top cover and base plate withventilation comb
12	4	Case foot with anti-slip protection, UL 94 V-0, PC black
13	2	Air filters
14	1	Fixing materials kit

3a, 3b, 3c or 3d according to selection

Note

- Order information see following page

Order Information

Accessories	
Earthing kit CU wire, 1.5 mm^2, PVC sleeve, green/yellow, 1 kit	**24571-380**
Al diecast foot with tip-up silver, 1 piece (SPQ 10)	**10603-002**
Plastic tip-up foot silver, similar to RAL 9006, PU 4 pieces	**20603-001**
Plastic tip-up foot anthracite, similar to RAL 7016, 4 pieces	**20603-002**
Stacking aid silver, similar to RAL 9006, PA, UL 94 V-0, PU 4 pieces	**20603-004**
Stacking aid anthracite, similar to RAL 7016, PA, UL 94 V-0, PU 4 pieces	**20603-003**

ServicePLUS see page 5.4

Desk-top cases – ratiopacPROair

RatiopacPRO air case

	Width W	Depth D	Case height H		
			4 U	5 U	7 U
			PCB height h		
				3 1	
	HP	mm	Part no.	Part no.	Part no.
Bezels	28	255.5	24571-146	24571-194	24571-242
	28	315.5	24571-149	24571-197	24571-245
	42	255.5	24571-158	24571-206	24571-254
	42	315.5	24571-161	**24571-209**	24571-257
	42	375.5	24571-162	24571-210	24571-258
	63	255.5	24571-170	24571-218	24571-266
	63	315.5	24571-173	24571-221	24571-269
	63	375.5	24571-174	24571-222	24571-270
	63	435.5	24571-175	24571-223	24571-271
	84	255.5	24571-182	24571-230	24571-278
	84	315.5	24571-185	24571-233	24571-281
	84	375.5	24571-186	24571-234	24571-282
	84	435.5	24571-187	24571-235	24571-283
01805055	84	495.5	24571-188	24571-236	24571-284
Front handles	28	255.5	24571-846	24571-894	24571-942
	28	315.5	24571-849	24571-897	24571-945
	42	255.5	24571-858	24571-906	24571-954
	42	315.5	24571-861	24571-909	24571-957
	42	375.5	24571-862	24571-910	24571-958
	42	435.5	24571-863	24571-911	24571-959
	63	315.5	24571-873	24571-921	24571-969
	63	375.5	24571-874	24571-922	24571-970
	63	435.5	24571-875	24571-923	24571-971
	84	255.5	24571-882	24571-930	24571-978
	84	315.5	24571-885	24571-933	24571-981
	84	375.5	24571-886	24571-934	24571-982
	84	435.5	24571-887	24571-935	24571-983
01805056	84	495.5	24571-888	24571-936	24571-984
19" mounting brackets	84	255.5	**24571-582**	24571-630	24571-678
	84	315.5	**24571-585**	24571-633	24571-681
	84	375.5	24571-586	24571-634	**24571-682**
	84	435.5	24571-587	24571-635	24571-683
01805057	84	495.5	24571-588	**24571-636**	24571-684
With 19" mounting brackets and front handles	84	255.5	**24572-670**	–	24572-690
	84	315.5	**24572-673**	–	**24572-693**
	84	375.5	**24572-674**	–	**24572-694**
	84	435.5	**24572-675**	–	**24572-695**
01805057	84	495.5	**24572-676**	–	24572-696

Note

- Dimension drawings and mounting depths see page 5.16
- Components see page 5.18

Desk-top cases – ratiopacPROair

RatiopacPRO air dimension drawings

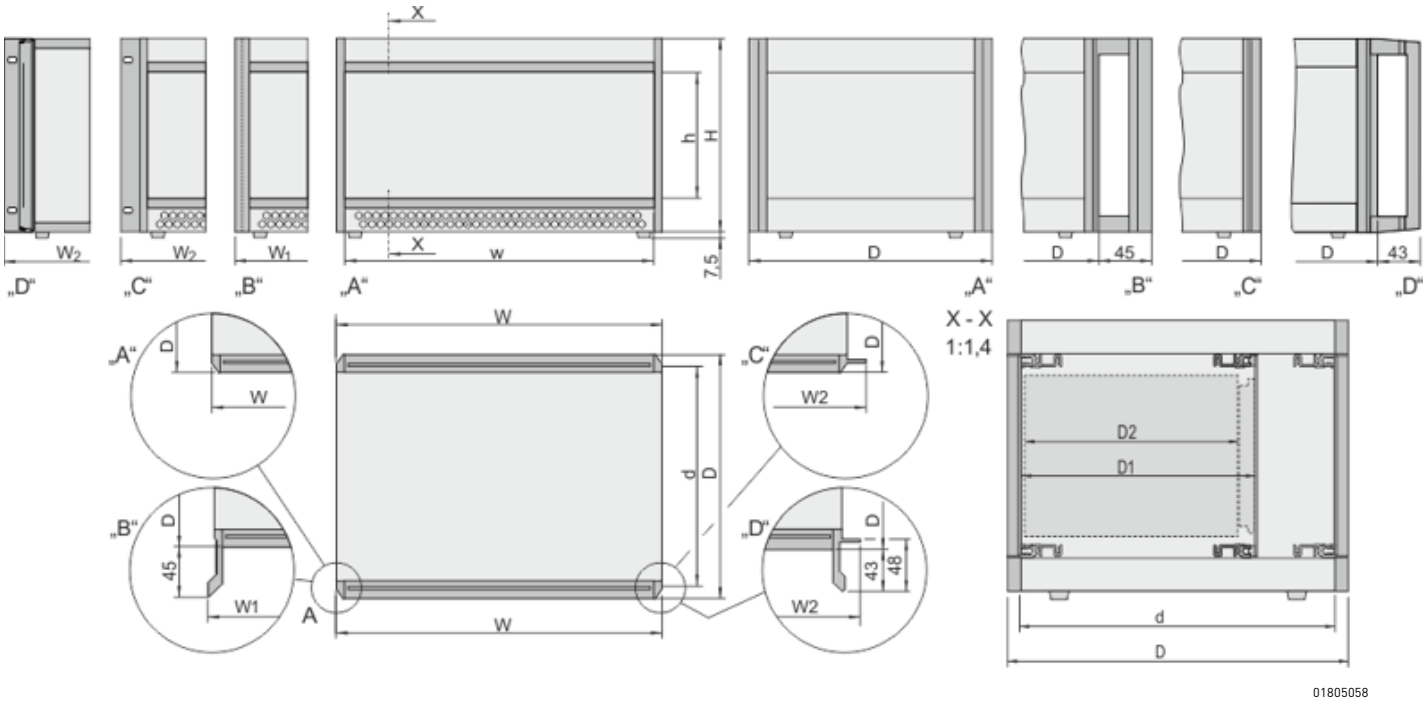

RatiopacPRO air with A - bezel; B - front handle; C - 19" mounting bracket; D - 19" mounting bracket with front handle

Dimensions table RatiopacPRO air

Height			Width					Depth			
H		H	W	W1	W2	w	D	d	D1	d2
in U	in mm	in mm	in HP	in mm	in mm	in mm	in mm	Total depth in mm	Usable depth in mm	Plug-in depth in mm	Board depth in mm
4	177.00	112.35	28	164.42	177.62	198.12	142.82	255.5	235.5	175	160
			42	235.54	248.74	269.24	213.94			235	220
			63	342.42	355.42	375.92	320.62	315.5	295.5	175	160
			84	448.90	462.10	482.60	427.30			235	220
5	221.45	156.80	42	235.54	248.74	269.24	213.94			295	280
			63	342.42	355.42	375.92	320.62	375.5	355.5	175	160
			84	448.90	462.10	482.60	427.30			235	220
7	310.35	245.70	42	235.54	248.74	269.24	213.94			295	280
			63	342.42	355.42	375.92	320.62			355	340
			84	448.90	462.10	482.60	427.30	435.5	415.5	175	160
										235	220
										295	280
										355	340
								495.5	475.5	175	160
										235	220
										295	280
										355	340

Components mountable in 15 mm depth grid

Desk-top cases – ratiopacPROair

Radial fan unit for ratiopacPRO air

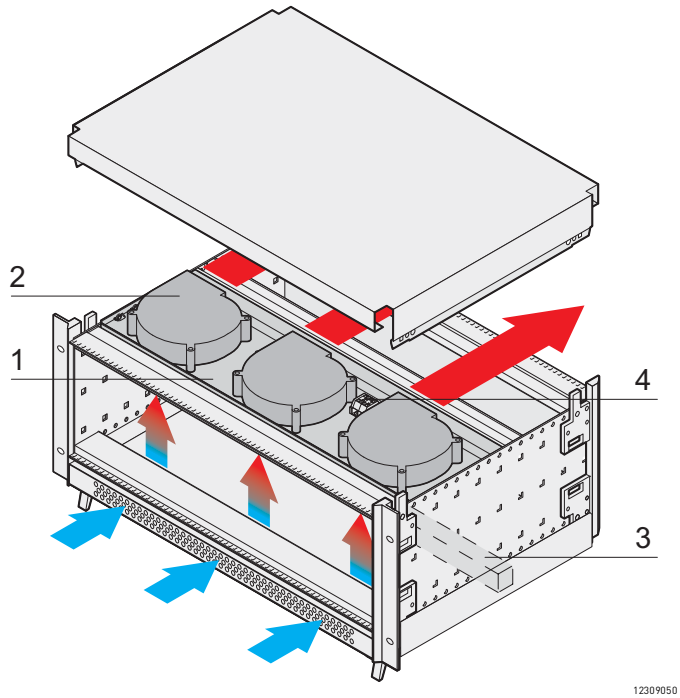

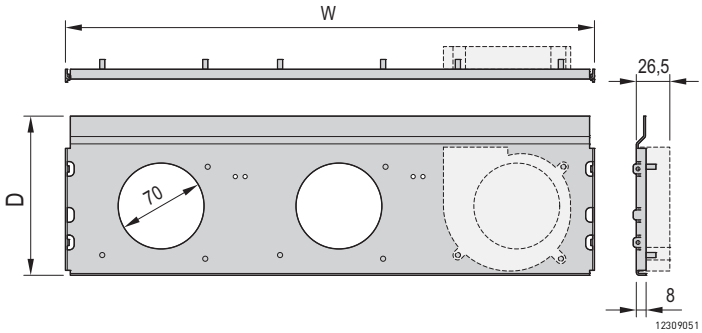

Depth D: 129.8 / 189.9 mm for 160 mm / 220 mm euroboards

- Only 1/2 U height
- Ball-bearing radial fans
- Fan holder in 4 widths and 2 depths
- Air capacity 36 m³/h (free blowing) per fan
- Air exhaust via perforation in cover plate
- No mechanical modification to case necessary
- Simple mounting
- No restriction to rear mounting space

Delivery comprises (Kit)

Item	Qty	Description
1	1	Fan support, Al, 1.5 mm, with crimp sockets for mounting the fans
2	1-3	Radial fan, ball bearing, 12 V_{DC}; airflow volume (50 Hz) 36 m³/h, free blowing; power consumption 6.7 W; connecting cable 300 mm, without plug (AWG 26); noise level in dB (A): 47.0; max. static pressure in Pa: 190; max. ambient temperature: 60 °C; fan housing and rotor: UL 94 V-0
3	1	Compartment seal, PE foam, UL 94, self-adhesive, temperature range -20 °C ... +85 °C
4	1	Terminal clamp, UL 90 V-0
5	1	Assembly kit

Order Information

Width	Width	Number of fans	Part no. for PCB depth	
HP	mm		160 mm	220 mm
28	146.87	1	24572-404	24572-408
42	218.00	1	24572-405	24572-409
63	324.67	2	24572-406	24572-410
84	431.35	3	**24572-407**	**24572-411**

Note

- Further configurations available on request
- Fans with tacho signal available on request

Desk-top cases – ratiopac PRO/ -air

EMC sealing front/rear panel to side panel

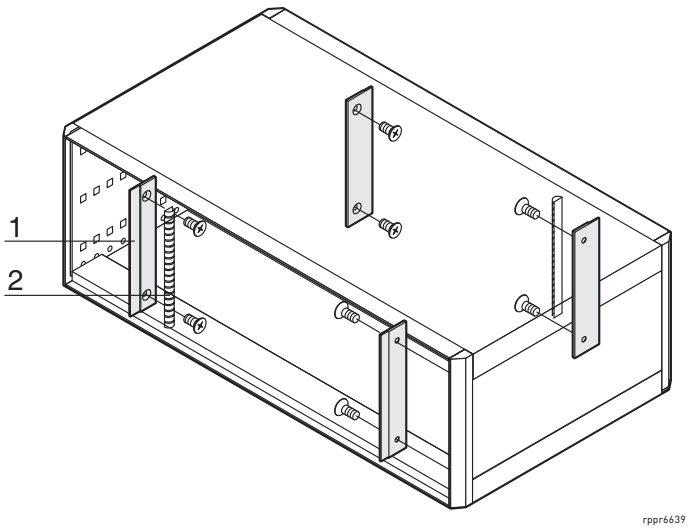

- For vertical EMC shielding between sub-assemblies and side panel
- Scope of delivery sufficient for one case

Delivery comprises (kit)

Item	Qty	Description
1	4	EMC support profile, Al extrusion
2	2	EMC sealing (textile), core: foam, sleeve: textile cladding with CuNi coating
3	1	Assembly kit

Order Information

For case height U	Part no.
2, 3-air	24571-334
3, 4-air	24571-331
4, 5-air	24571-332
6, 7-air	24571-333
5, 6-air	24571-335

EMC sealing side panel to cover plate

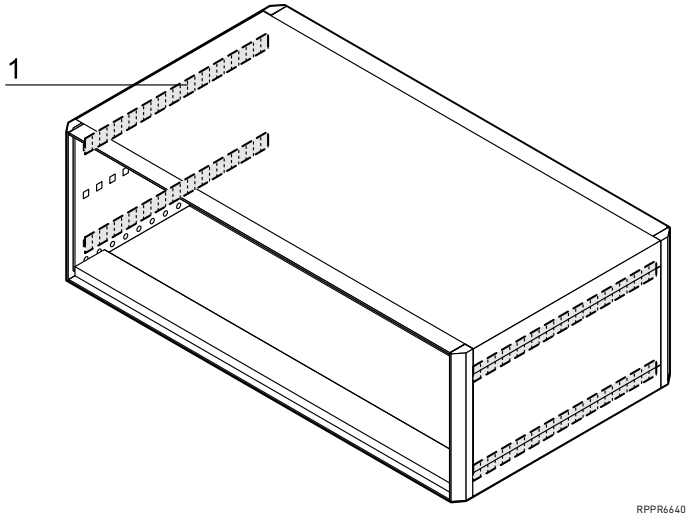

- For horizontal EMC shielding between side panels and cover plates
- Scope of delivery sufficient for one case

Delivery comprises (kit)

Item	Qty	Description
1	4	Contact strip, stainless steel

Order Information

Depth mm	Part no.
255	24571-338
315	24571-339
375	24571-340
435	24571-341
495	24571-342

Desk-top cases – ratiopac PRO/ -air

EMC sealing front/rear panel to horizontal rail

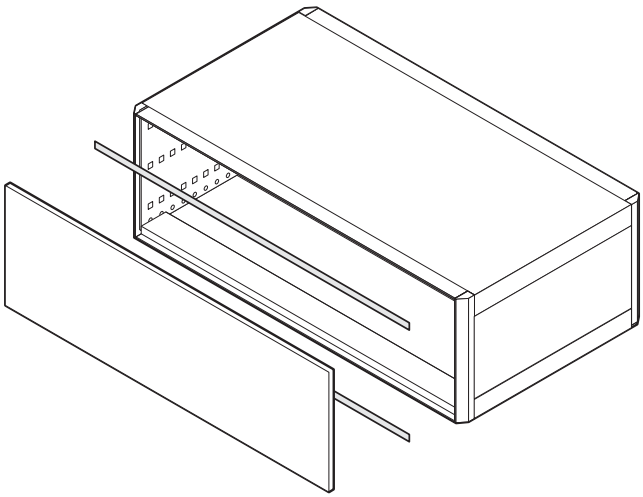

rppr6739

- The contact strip is clipped onto the horizontal rail and sets up the contact to front panel or rear panel
- Can be used for rear horizontal rails (H-VT, L-VT) and all front horizontal rails

Delivery comprises

Item	Qty	Description
1	10/100	Stainless steel EMC gasket

Order Information

Width HP	Width mm	Qty/PU	Part no.
28	131.78	10	**24560-229**
42	202.9	10	**24560-231**
63	304.8	10	**24560-233**
84	416.3	10	**24560-235**
84	416.3	100	**24560-236**

EMC sealing horizontal rail to horizontal rail

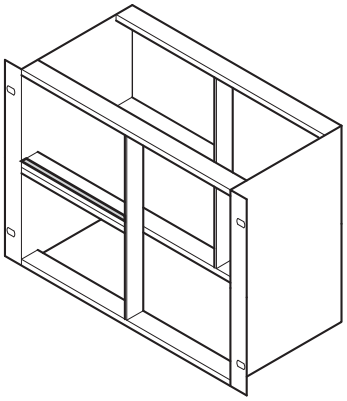

BPA46548

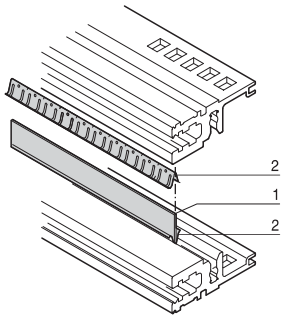

BZA45877

- For shielding of two horizontal rails located directly above each other with vertical division of the mounting height

Delivery comprises

Item	Qty	Description
1	1	Cover strip, Al, 1 mm
2	2	Contact spring, St, stainless

Order Information

Length HP	Part no.
20	**24562-520**
28	**24562-528**
40	**24562-540**
42	**24562-542**
63	**24562-563**
84	**24562-584**
Assembly tool for EMC sealing, St, stainless (horizontal rails),1 piece	**24560-271**

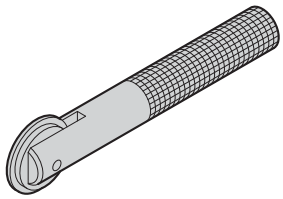

aza45937

Assembly tool

EMC front/rear panel, slotted, shielded

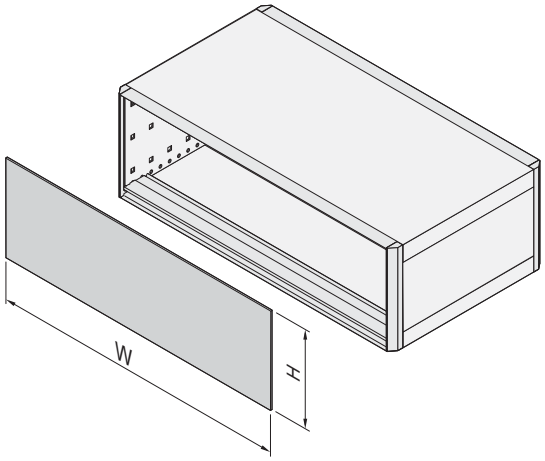

01811055

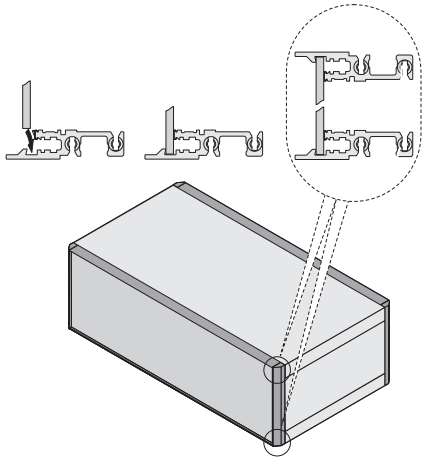

01811056

Front panel/horizontal rail

- No screws required for fixing
- Special horizontal rails cover the edges of the front panel (top and bottom) and prevent bowing of the front panel

NEW

Delivery comprises (Kit)

Item	Qty	Description
1	1	Full-width front panel, Al, 2.5 mm, front: anodised, rear: colour passivated
2	2	Horizontal rail, front; special for this front panel
3	4	EMC support profile
4	2	Contact strip horizontal rail - front panel
5	3	EMC textile gasket
6	1	Fixing material kit, user manual

Order Information

For case height U	Height H mm	For case width HP	Width W mm	Part no.
2, 3-air	84.0	28	141.9	24572-599
2, 3-air	84.0	42	213.2	24572-600
2, 3-air	84.0	63	319.7	24572-601
2, 3-air	84.0	84	426.4	24572-602
3, 4-air	128.4	28	141.9	**24572-603**
3, 4-air	128.4	42	213.2	**24572-604**
3, 4-air	128.4	63	319.7	**24572-605**
3, 4-air	128.4	84	426.4	**24572-606**
4, 5-air	172.9	28	141.9	24572-607
4, 5-air	172.9	42	213.2	24572-608
4, 5-air	172.9	63	319.7	24572-609
4, 5-air	172.9	84	426.4	24572-610

Note

- To obtain a shielded case, all EMC sealings must be fitted (front panel/rear panel - side panel; side panel - cover plate; front panel/rear panel - horizontal rail; horizontal rail - horizontal rail)
- EMC sealing see from page 5.18

Desk-top cases – ratiopacPRO/ -air

Full-width front panel, slotted, unshielded

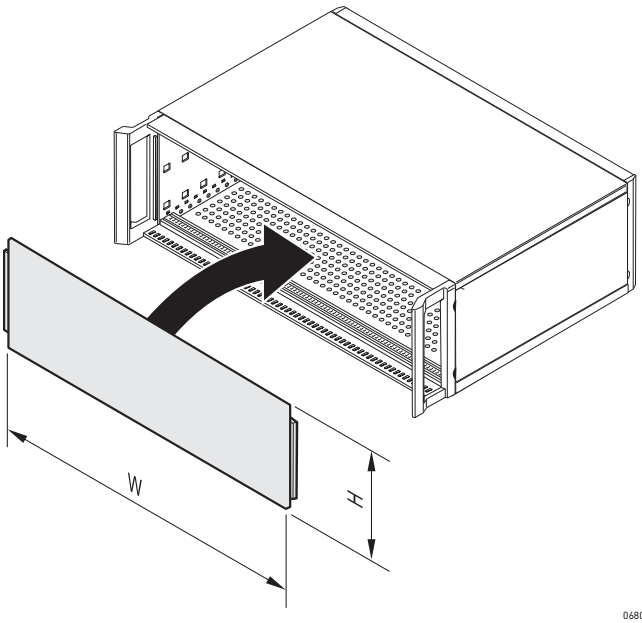

06801502

- Front panels can also be used as rear panels
- No screws required for fixing
- Inserted between side panel and castings such as trim, 19" mounting bracket or handle

Delivery comprises

Item	Qty	Description
1	1	Front panel, Al, 2.5 mm, front: anodised, rear: colour passivated

Order Information

For case height U	Height H mm	For case width HP	Width W mm	Part no.
2, 3-air	84	28	141.9	34571-617
2, 3-air	84	42	213.2	34571-618
2, 3-air	84	63	319.7	34571-619
2, 3-air	84	84	426.4	**34571-620**
3, 4-air	128.4	28	141.9	**34571-605**
3, 4-air	128.4	42	213.2	**34571-606**
3, 4-air	128.4	63	319.7	**34571-607**
3, 4-air	128.4	84	426.4	**34571-608**
4, 5-air	172.9	28	141.9	34571-609
4, 5-air	172.9	42	213.2	34571-610
4, 5-air	172.9	63	319.7	34571-611
4, 5-air	172.9	84	426.4	**34571-612**
5, 6-air	217.3	28	141.9	34571-621
5, 6-air	217.3	42	213.2	34571-622
5, 6-air	217.3	63	319.7	34571-623
5, 6-air	217.3	84	426.4	34571-624
6, 7-air	261.8	28	141.9	34571-613
6, 7-air	261.8	42	213.2	34571-614
6, 7-air	261.8	63	319.7	34571-615
6, 7-air	261.8	84	426.4	**34571-616**

Note

- Screw-fixed front panels see chapter Front panels, page 7.4

Desk-top cases – ratiopac PRO/ -air

Rear panels with ventilation slots

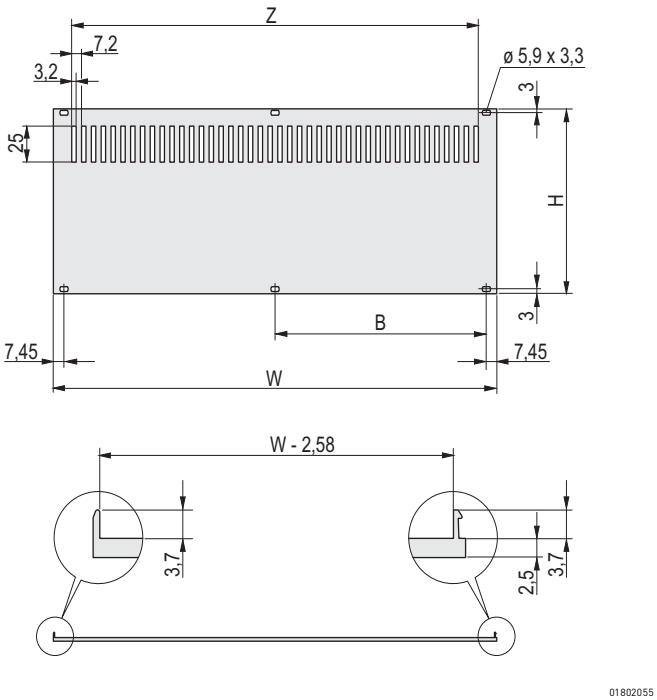

01802055

Shieldable

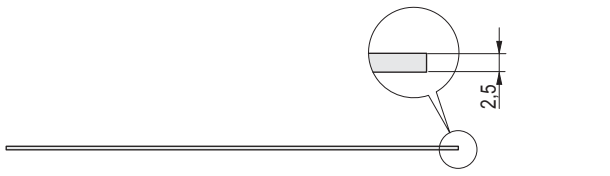

01804050

Unshielded

- Two versions:
  unshielded, Al, 2.5 mm;
  shieldable, Al extrusion (textile EMC seal, retrofittable)
- Mounting on horizontal rails (top and bottom)

Delivery comprises

Item	Qty	Description
1	1	Rear panel, Al, 2.5 mm, front: anodised, rear: iridescent green chromated; unshielded or shieldable with EMC seal (textile)

Order Information

Height U	H mm	Width W HP	W mm	B mm	unshielded Part no.	shieldable Part no.
2, 3-air	84	28	141.9	–	**30849-007**	20848-679
2, 3-air	84	42	213	101.6	**30849-014**	20848-680
2, 3-air	84	63	319.7	157.5	**30849-015**	20848-681
2, 3-air	84	84	426.4	208.3	**30849-016**	20848-682
3, 4-air	128.4	28	141.9	–	**30849-008**	**20848-633**
3, 4-air	128.4	42	213	101.6	**30849-021**	20848-634
3, 4-air	128.4	63	319.7	157.5	**30849-022**	20848-635
3, 4-air	128.4	84	426.4	208.3	**30849-023**	**20848-636**
4, 5-air	172.9	28	141.9	–	**30849-009**	20848-656
4, 5-air	172.9	42	213	101.6	**30849-028**	20848-657
4, 5-air	172.9	63	319.7	157.5	**30849-029**	20848-658
4, 5-air	172.9	84	426.4	208.3	**30849-030**	20848-659
5, 6-air	217.3	28	141.9	–	**30849-011**	20848-744
5, 6-air	217.3	42	213	101.6	**30849-171**	20848-745
5, 6-air	217.3	63	319.7	157.5	**30849-172**	20848-746
5, 6-air	217.3	84	426.4	208.3	**30849-173**	20848-747
6, 7-air	261.8	28	141.9	–	**30849-010**	20848-640
6, 7-air	261.8	42	213	101.6	**30849-035**	**20848-641**
6, 7-air	261.8	63	319.7	157.5	**30849-036**	20848-642
6, 7-air	261.8	84	426.4	208.3	**30849-037**	**20848-643**

- Please order textile EMC seals separately
- Assembly parts see page Chapter 7, Front panels
- Rear/front panels without perforation see Chapter 7, Front panels
- Rear panels with fan available on request

Textile EMC seals

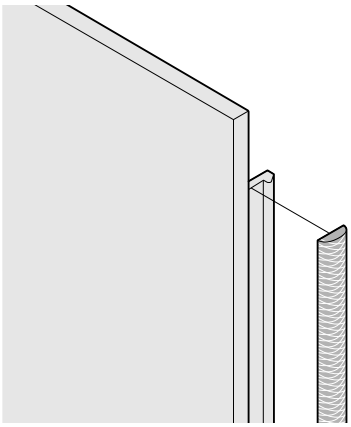

04602054

Delivery comprises

Item	Qty	Description
1	10/100	Textile EMC seal, core: foam, sleeve: textile cladding with CuNi coating

Order Information

Height U	Height mm	Qty/PU pieces	Part no.
2, 3-air	52	10	**21101-857**
3, 4-air	97	100	**21101-854**
3, 4-air	97	10	**21101-853**
4, 5-air	142	10	**21101-858**
5, 6-air	187	10	**21101-978**
6, 7-air	232	100	**21101-856**
6, 7-air	232	10	**21101-855**

Desk-top cases – ratiopacPRO/ -air

Tip-up feet and stacking aid/design element

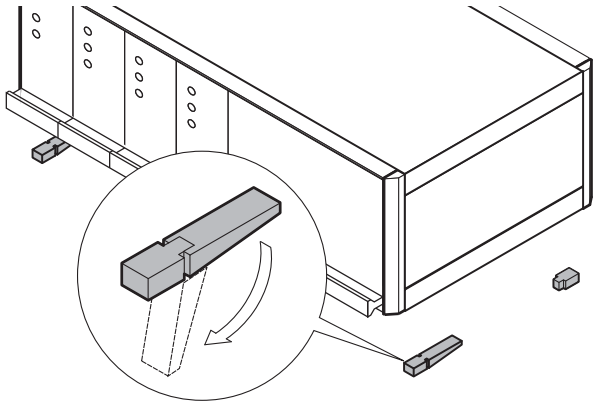

Tip-up foot

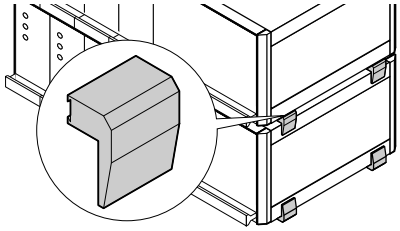

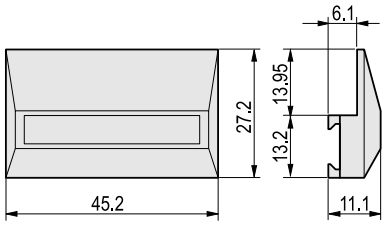

Stacking aid/design element

- Can be used instead of standard feet
- Carrying capacity: 25 kg per foot
- Mounting holes in bottom of casing

Delivery comprises ((kit))

Item	Qty	Description
1	4	Foot, PA, UL 94 V-0
2	4	Anti-slip protection, TPE
3	2	Tip-up device, PA, UL 94 V-0
4	1	Assembly kit

Order Information

Description	Part no.
Tip-up foot, silver, similar to RAL 9006	**20603-001**
Tip-up foot, anthracite, similar to RAL 7016	**20603-002**
Stacking aid/design element silver, similar to RAL 9006, PA, UL 94 V-0, PU 4 pieces	**20603-004**
Stacking aid/design element anthracite, similar to RAL 7016, PA, UL 94 V-0, PU 4 pieces	**20603-003**

Note

- Tip-up feet are required to mount the stacking aid

Air filters for ratiopacPRO air

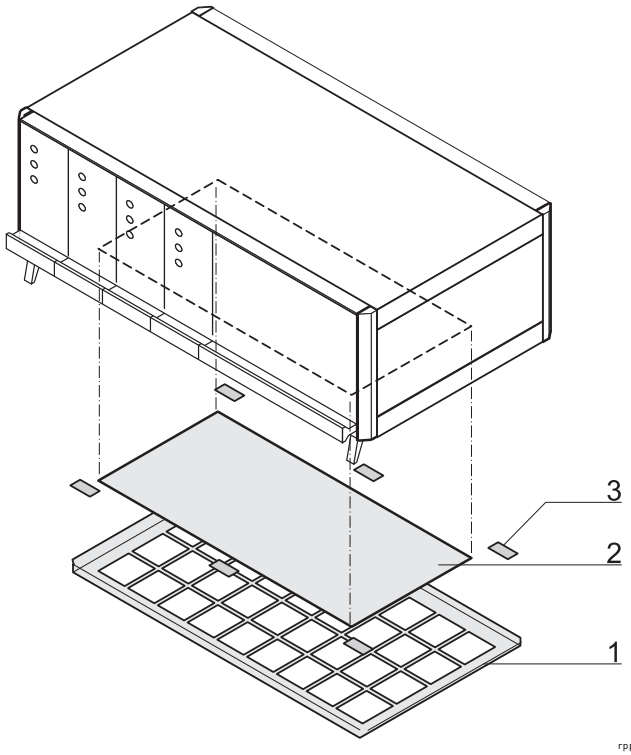

- Retrofit mounting without reworking and tools
- Filter replacement without opening the case, IP protection retained

Delivery comprises (kit)

Item	Qty	Description
1	1	Filter holder, Al, 1 mm, powder-coated, RAL 9006
2	1	Filter mat, synthetic fibre
3	1	Self-adhesive fixings

Order Information

For case width	Air filter	Replacement filter 1 piece
HP	Part no.	Part no.
28	**24571-325**	**64571-033**
42	**24571-326**	**64571-034**
63	**24571-327**	**64571-035**
84	**24571-328**	**64571-036**

- To optimise the air supply, tip-up feet must be fitted to the case, see page 5.23

Earthing kit

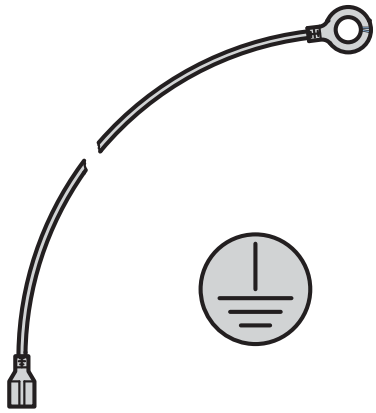

aza43284

- Forms the GND/earthing connections between side panels, base plate, top cover and rear panel
- Protective GND/earthing connections in accordance with:
  - DIN EN 50178/VDE 0160
  - DIN EN 60950/VDE 0805
  - DIN EN 61010-1/VDE 0411 part 1
  - DIN EN 61010-1A2/VDE 0411 part 1/A1
- VDE tested

Order Information

Description	Part no.
GND/earthing kit, Cu wire 1.5 mm^2, PVC sleeve, green/yellow	24571-380

Desk-top cases – ratiopacPRO

Front handles for retrofitting

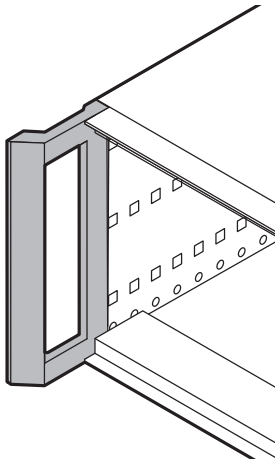

RPPR6651

- For conversion of cases with cover strip, 19" mounting bracket or 19" mounting bracket with front handle

Delivery comprises

Item	Qty	Description
1	2	Front handle, Al die-cast, powder-coated, RAL 7016

Order Information

Front handle for	Part no.
RatiopacPRO 3 U	**24571-301**
RatiopacPRO 4 U	**24571-302**
RatiopacPRO 5 U	24571-993
RatiopacPRO 6 U	**24571-303**
RatiopacPRO air 3/4 U	**24571-304**
RatiopacPRO air 4/5 U	**24571-305**
RatiopacPRO air 6/7 U	**24571-306**

19" mounting brackets for retrofitting

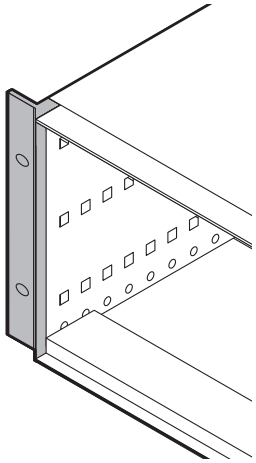

RPPR6652

- For conversion of cases with cover strip, front handle or 19" mounting bracket with front handle

Delivery comprises

Qty	Description
2	19" mounting bracket, Al diecast, powder-coated, RAL 7016

Order Information

19" mounting angle	Part no.
RatiopacPRO 2 U	**24571-994**
RatiopacPRO 3 U	**24571-295**
RatiopacPRO 4 U	**24571-296**
RatiopacPRO 5 U	**24571-992**
RatiopacPRO 6 U	**24571-297**
RatiopacPRO air 4 U	**24571-298**
RatiopacPRO air 5 U	**24571-299**
RatiopacPRO air 7 U	**24571-300**

19" mounting bracket with front handle for conversion

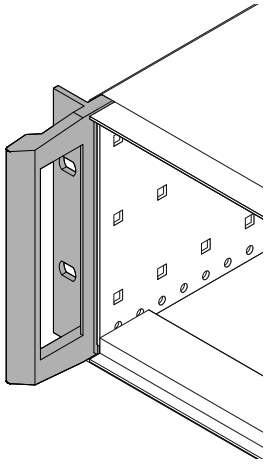

01813056

- For conversion of cases with cover strip, front handle or 19" mounting bracket

Delivery comprises

Qty	Description
2	19" mounting bracket with front handle, Al diecast, powder-coated, RAL 7016

Order Information

19" mounting angle	Part no.
RatiopacPRO 2 U	**24572-700**
RatiopacPRO 3 U	**24572-701**
RatiopacPRO 4 U	**24572-702**
RatiopacPRO 6 U	**24572-704**
RatiopacPRO air 4 U	**24572-705**
RatiopacPRO air 7 U	**24572-707**

Desk-top cases – ratiopacPRO/ -air

Cable holder

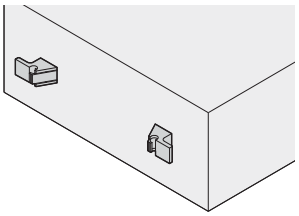

02908053

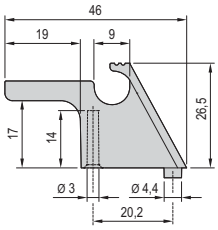

02908052

Delivery comprises

Item	Qty	Description
1	2	Cable bracket, ABS, UL V-94 0, RAL 7016, detent for cables between 8 mm and 12 mm
2	1	Drilling template, two drilled holes each per bracket are needed in rear panel
3	1	Assembly kit

Order Information

Description	Part no.
Cable holder	**24575-800**

Air baffles for ratiopacPRO air

- The air baffle (item 1) closes the space (1/2 U) between the rear horizontal rail and base plate

Delivery comprises (in kit form)

Item	Qty	Description
1	1	Compartment seal, PE foam, UL 94 HF 1 + HF 2, self-adhesive, temperature range: -40 °C ... +85 °C

Order Information

For case width HP	Length mm	Part no.
42	218.4	**20833-351**
63	325.1	**20833-352**
84	431.8	**20833-353**

Note

- Fan rear panel available on request
- Radial fan unit see page 5.17

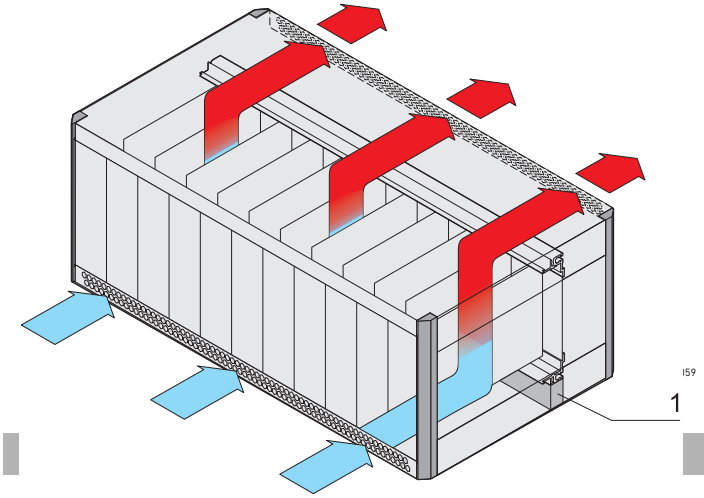

Strap handles

- Retrofittable without mechanical modifications to the case
- Static load-carrying capacity 20 kg

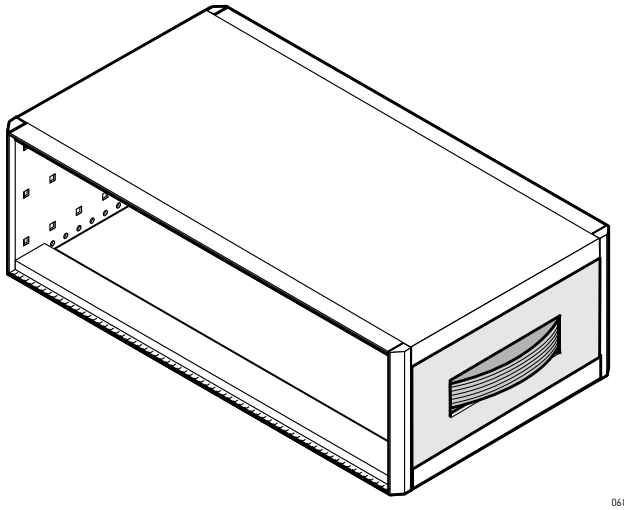

06801515

Delivery comprises (kit)

Item	Qty	Description
1	1	Handle, steel spring, plastic-sheathed (flexible plastic), RAL 7016
2	1	Side plate, Al, visible surfaces powder-coated, RAL 9006
3	2	Adaptor, Al die-cast
4	1	Assembly kit

Order Information

For case depth mm	For case height 3 U, 4 U air Part no.	For case height 4 HE, 5 Uair Part no.
315	**24571-308**	**24571-314**
375	**24571-309**	**24571-315**
435	**24571-310**	**24571-316**

Desk-top cases – ratiopacPRO/ -air

Tip-up carrying handles

06803006

- Retrofittable without mechanical modifications to the case
- Adjustable in 30° increments
- Static load-carrying capacity 30 kg

Delivery comprises (kit)

Item	Qty	Description
1	1	Carrying bar, Al extrusion, powder coated, RAL 9006
2	1	Handle shell, ABS, UL 94 V-0, RAL 7016
3	2	Tip-up protection, ABS, UL 94 V-0, RAL 7016
4	2	Notch device, Al die-cast
5	2	Cover cap, ABS, UL 94 V-0, RAL 7016

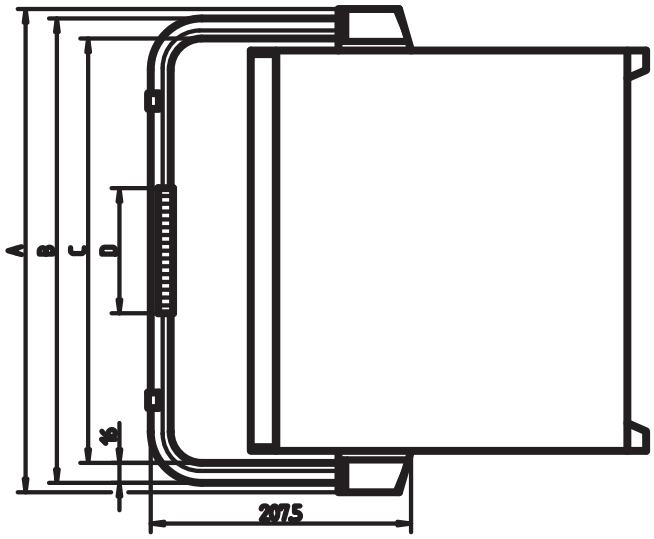

RPA43897

For case height	For case width	A	B	C	D
U	HP	mm	mm	mm	mm
3, 4, 4-air, 5-air	42	283,4	279,4	247,4	115
3, 4, 4-air, 5-air	63	390,1	386,1	354,1	195
3, 4, 4-air, 5-air	84	496,8	492,8	460,8	195

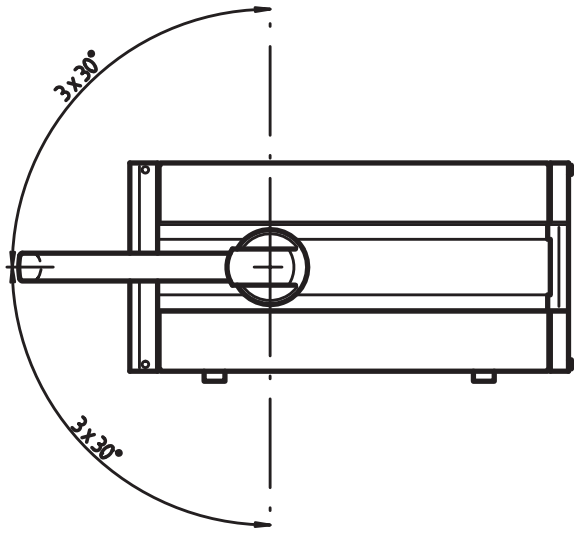

rpa43898

Order Information

For case height	For case width	For case depth	Tip-up carrying handle	Assembly kit
U	HP	mm	Part no.	Part no.
3, 4-air	42	255	**24571-320**	**24571-352**
3, 4-air	42	315	**24571-320**	**24571-353**
3, 4-air	42	375	**24571-320**	**24571-354**
3, 4-air	42	435	**24571-320**	**24571-355**
3, 4-air	42	495	**24571-320**	**24571-356**
3, 4-air	63	255	**24571-321**	**24571-352**
3, 4-air	63	315	**24571-321**	**24571-353**
3, 4-air	63	375	**24571-321**	**24571-354**
3, 4-air	63	435	**24571-321**	**24571-355**
3, 4-air	63	495	**24571-321**	**24571-356**
3, 4-air	84	255	**24571-322**	**24571-352**
3, 4-air	84	315	**24571-322**	**24571-353**
3, 4-air	84	375	**24571-322**	**24571-354**
3, 4-air	84	435	**24571-322**	**24571-355**
3, 4-air	84	495	**24571-322**	**24571-356**
4, 5-air	42	255	**24571-320**	**24571-359**
4, 5-air	42	315	**24571-320**	**24571-360**
4, 5-air	42	375	**24571-320**	**24571-361**
4, 5-air	42	435	**24571-320**	**24571-362**
4, 5-air	42	495	**24571-320**	24571-363
4, 5-air	63	255	**24571-321**	**24571-359**
4, 5-air	63	315	**24571-321**	**24571-360**
4, 5-air	63	375	**24571-321**	**24571-361**
4, 5-air	63	435	**24571-321**	**24571-362**
4, 5-air	63	495	**24571-321**	24571-363
4, 5-air	84	255	**24571-322**	**24571-359**
4, 5-air	84	315	**24571-322**	**24571-360**
4, 5-air	84	375	**24571-322**	**24571-361**
4, 5-air	84	435	**24571-322**	**24571-362**
4, 5-air	84	495	**24571-322**	24571-363

Note

- Cannot be used in conjunction with front handles
- Assembly kit is required for tip-up carrying handle, please order separately

Torx panhead screws

Order Information

	Description	Application	Material	Dimension	Qty/PU	Part no.
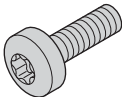 AZA45923	Countersunk screw with Torx	For horizontal rail to side panel, with GND/ earthing function	St, zinc-plated	M4 x 14	100	**24571-371**
	Countersunk screw with Torx	For horizontal rail to side panel, if guide rail is bolted onto slot 1	St, zinc-plated	M4 x 10	100	**24571-372**

Nut

Order Information

	Description	Application	Material	Dimension	Qty/PU	Part no.
AZA45921	Square nut	For fixing: parts to side panels, support profiles, mounting plates	St, zinc-plated	M4	100	**24560-140**

Assembly tools

Order Information

	Description	Application	Dimension	Qty/PU	Part no.
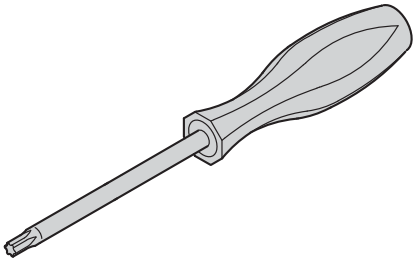 AZA45925	Torx screwdriver		T8	1	**64560-026**
			T20	1	**64560-027**
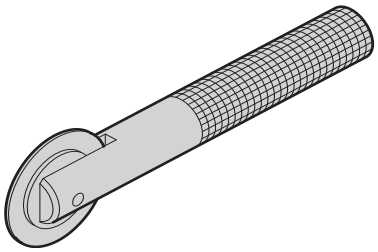 aza45938	Assembly tool for horizontal rails	Exclusively to fix stainless steel EMC gaskets in horizontal rails	–	1	**24560-271**
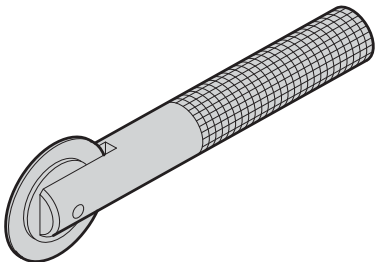 aza45937	Assembly tool for front panels	For mounting stainless steel EMC contact strips on front panels with lateral slot	–	1	**24560-270**

Desk-top cases – ratiopacPRO/ -air

Mounting position ratiopacPRO horizontal rails/central rails

front rear

2 U

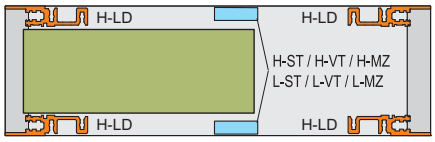

01805060

front rear

3 U

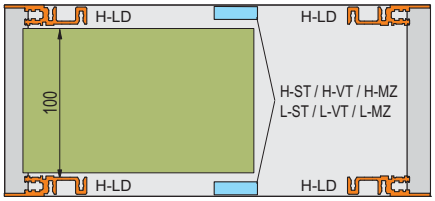

01802057

4 U (3 U + 1 U)

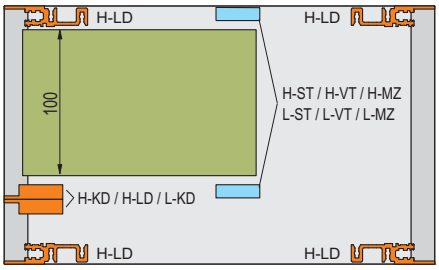

01802058

5 U (1 U + 3 U + 1 U)

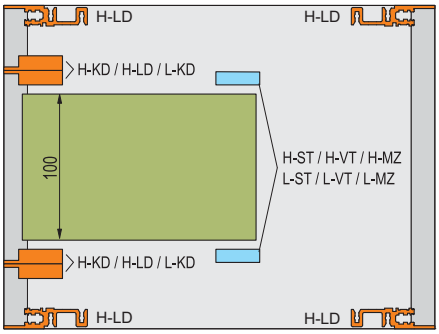

01805061

5 U (3 U + 2 U)

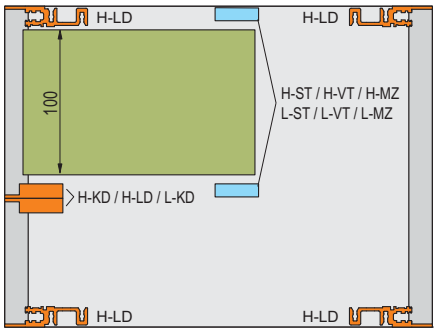

01805062

6 U

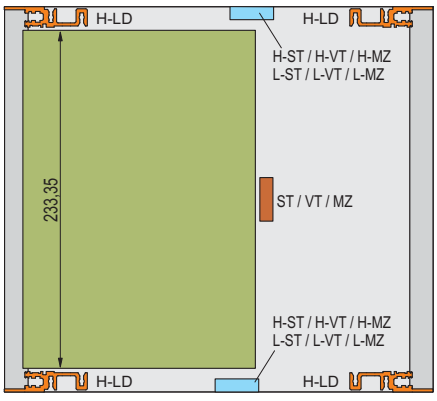

01802059

6 U (2 x 3 U)

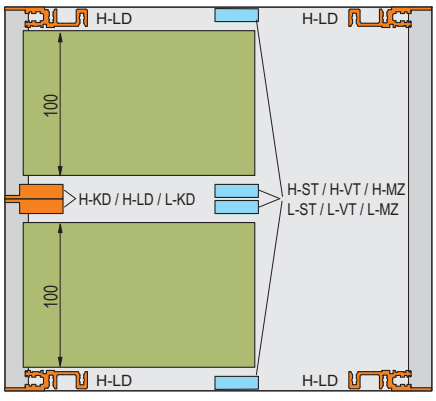

01802060

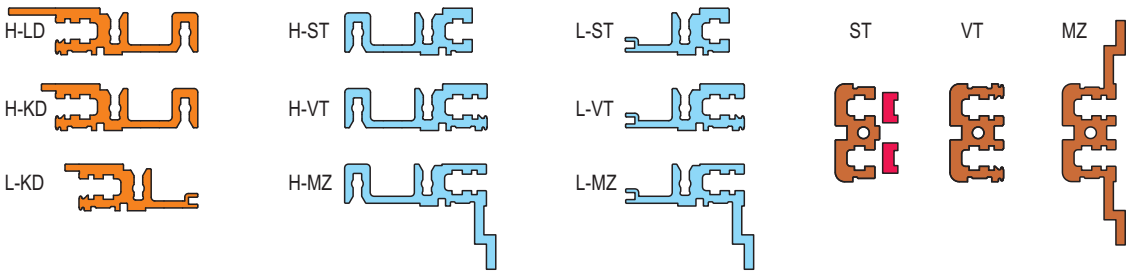

01808050

Horizontal rails can be bolted on in 15 mm depth grid

Mounting position ratiopacPRO air horizontal rails/central rails

front rear front rear

4-air U (1/2 U + 3 U + 1/2 U)

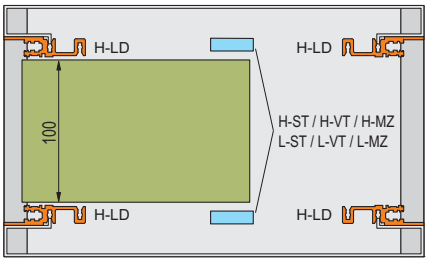

01802061

5-air U (1/2 U + 3 U + 1U +1/2 U)

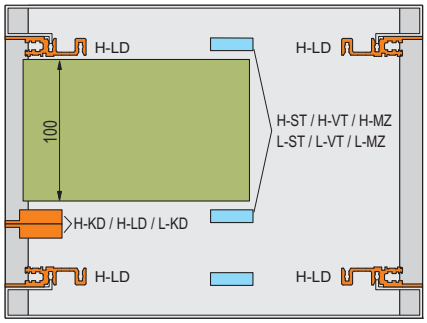

01802062

7-air U (1/2 U + 6 U + 1/2 U)

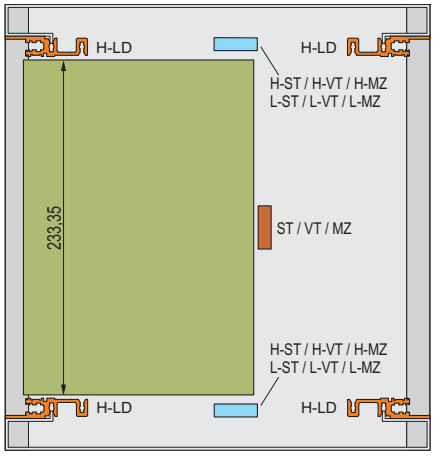

01802063

7-air U (1/2 U + 3 U + 3U 1/2 U)

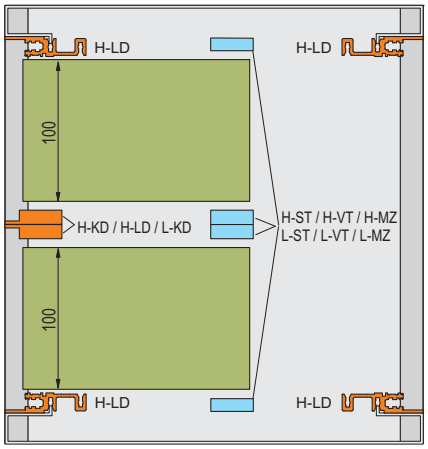

01802064

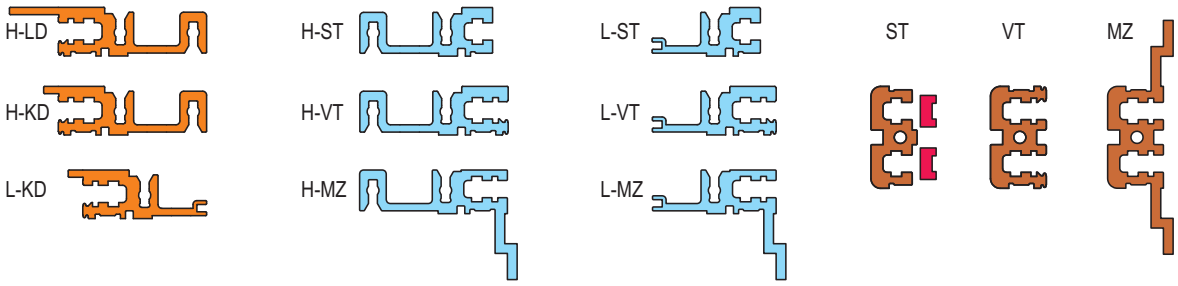

Horizontal rails can be bolted on in 15 mm depth grid

01808050

Desk-top cases – ratiopacPRO/ -air

Front horizontal rails

Order Information

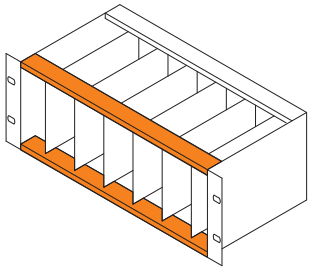 bza44980	"heavy" Type H-KD short lip 06197008 Al extrusion, anodised finish, contact surface conducting, with printed HP markings	With long lip for insertion/extraction of CompactPCI and VME64x boards "heavy" Type H-LD long lip 06197009 Al extrusion, anodised finish, contact surface conducting, with printed HP markings
Usable length HP / **Length mm**	**1 piece (SPQ 10)[1)]**	**1 piece (SPQ 10)[1)]**
28 / 147.32	**34560-228**	**34560-328**
42 / 218.44	**34560-242**	**34560-342**
63 / 325.12	**34560-263**	**34560-363**
84 / 431.80	**34560-284**	**34560-384**
M4 × 10, St, zinc-plated, necessary if guide rail is screwed to slot 1, PU 100 pieces	**24571-372**	**24571-372**
Threaded inserts see page	5.35	5.35

1) SPQ (standard pack quantity): Order number includes 1 piece, but delivery is exclusively made in standard pack quantity (SPQ); please order at least the SPQ quantity or a multiple thereof

"light": loading capacity up to approx. 7.5 kg; "heavy": loading capacity > 7.5 kg

Rear horizontal rails

Order Information

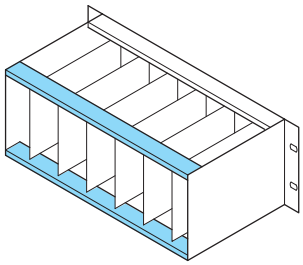

06105074

Usable length HP	Length mm	For indirect backplane fixing with insulation strip	For direct backplane fixing	For direct fixing of connectors to EN 60603-2 (DIN 41612)
		04400001	04400002	04400003
		"heavy" Type H-ST standard	"heavy" Type H-VT long lip	"heavy" Type H-MZ with Z-rail
		06197011	06197013	06197015
		Al extrusion, anodised finish, contact surface conducting, with printed HP markings	Al extrusion, anodised finish, contact surface conducting, with printed HP markings	Al extrusion, anodised finish, contact surface conducting, with printed HP markings
		1 piece (SPQ 10)[1]	1 piece (SPQ 10)[1]	1 piece (SPQ 10)[1]
28	147.32	**34560-528**	**34560-728**	**34560-928**
42	218.44	**34560-542**	**34560-742**	**34560-942**
63	325.12	**34560-563**	**34560-763**	**34560-963**
84	431.80	**34560-584**	**34560-784**	**34560-984**
Torx panhead screw, 4 x 10		**24571-372**	**24571-372**	**24571-372**
Perforated rail for connector mounting with insulation strip see page		5.35	–	–
Z-rail for connector mounting without insulation strip see page		5.35	–	–
Insulation strips see page		5.35	–	–
Threaded inserts see page		5.35	5.35	5.35

1) SPQ (standard pack quantity): Order number includes 1 piece, but delivery is exclusively made in standard pack quantity (SPQ); please order at least the SPQ quantity or a multiple thereof

"light": loading capacity up to approx. 7.5 kg; "heavy": loading capacity > 7.5 kg

Desk-top cases – ratiopacPRO/ -air

Horizontal rails rear, centre

Order Information

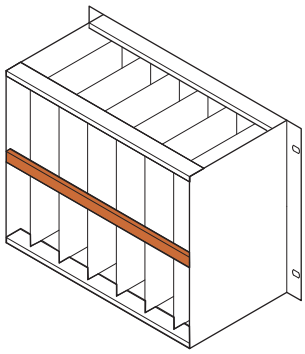

06108090

Usable length HP	Length mm	For indirect mounting of backplanes via insulation strip	For direct backplane mounting	For direct fixing of connectors to EN 60603-2 (DIN 41612)
		04400001	04400002	04400003
		Type ST	Type VT	Type MZ
		06197016	06197017	06197018
		Al extrusion, finish anodised, conductive contact surface; horizontal rail type AB (AB = support) is required to fix the 80 mm rear I/O boards; without marking	Al extrusion, finish anodised, conductive contact surface; horizontal rail type AB (AB = support) is required to fix the 80 mm rear I/O boards; without marking	Al extrusion, finish anodised, conductive contact surface; horizontal rail type AB (AB = support) is required to fix the 80 mm rear I/O boards; without marking
		1 piece (SPQ 10)[1)]	1 piece (SPQ 10)[1)]	1 piece (SPQ 10)[1)]
28	147.32	**34561-028**	**34561-128**	**34561-228**
42	218.44	**34561-042**	**34561-142**	**34561-242**
63	325.12	**34561-063**	**34561-163**	**34561-263**
84	431.80	**34561-084**	**34561-184**	**34561-284**
Torx panhead screw, 4 x 10		**24571-372**	**24571-372**	**24571-372**
Insulation strips see page		5.35	–	–
Threaded inserts see page		5.35	5.35	5.35

1) SPQ (standard pack quantity): Order number includes 1 piece, but delivery is exclusively made in standard pack quantity (SPQ); please order at least the SPQ quantity or a multiple thereof

Horizontal rails (type AB) for rear I/O guide rails

Order Information

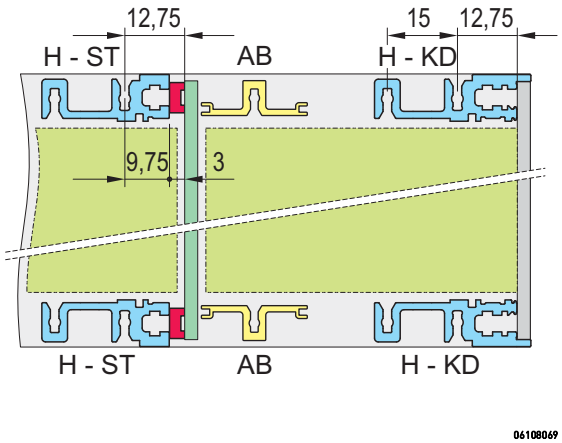

For CompactPCI in rear I/O area

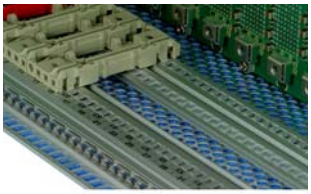

Type AB

Al extrusion, finish anodised,
conductive contact surface;
horizontal rail type AB (AB = support)
is required to fix the 80 mm rear I/O boards;
without marking

Usable length HP	Length mm	1 piece (SPQ 10)[1]
20	106.68	**34561-520**
28	147.32	**34561-528**
40	208.28	**34561-540**
42	218.44	**34561-542**
63	325.12	**34561-563**
84	431.80	**34561-584**
–	1000	**34561-501**
Screw, M4 x 14, PU 100 pieces, for fastening horizontal rail to side panel		**24560-130**

1) SPQ (standard pack quantity): Order number includes 1 piece, but delivery is exclusively made in standard pack quantity (SPQ); please order at least the SPQ quantity or a multiple thereof
"light": loading capacity up to approx. 7.5 kg; "heavy": loading capacity > 7.5 kg

Note

- All horizontal rails without print
- 1000 mm version without M4 thread in end

Desk-top cases – ratiopac PRO/ -air

Threaded inserts, perforated strips, insulation strips

	Threaded insert		Perforated strip		Insulation strip	
	M2.5 / M3		(item 1)			
	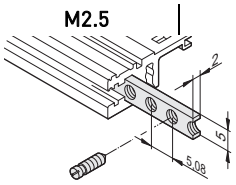 06103056		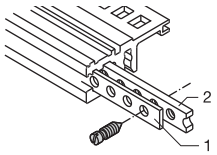 BZA45853		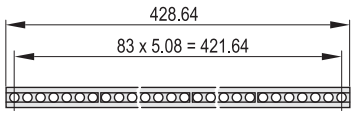 BZ6749	
	Required for fixing the front panel to the horizontal rail; St, zinc-plated; use collar screw 12.3 mm, see page 6.66		For centring shielded plug-in units, Al, 1 mm, please order fixing grub screw separately		For insulated mounting of backplane; PBT UL 94 V-0, grey	
Usable length HP	Length mm	1 piece (SPQ 10)[1]	1 piece (SPQ 10)[1]	Length mm	1 piece (SPQ 10)[1]	Length mm	PU 10 pieces[2]
28	146.82	**34561-328**	–	147.12	**30845-197**	144.20	**24560-828**
42	217.94	**34561-342**	–	218.24	**30845-211**	210.40	**24560-842**
63	324.62	**34561-363**	–	324.92	**30845-232**	316.88	**24560-863**
84	431.30	**34561-384**	**34561-484**	431.60	**30845-253**	428.64	**24560-884**
Accessories							
Grub screw M2.5 x 8, PU 100 pieces		**21100-276**	–		–		–
Grub screw M2.5 x 9, PU 100 pieces		–	–		**21101-359**		–
Grub screw M3 x 8, PU 100 pieces		–	**21100-646**		–		–

1) SPQ (standard pack quantity): Order number includes 1 piece, but delivery is exclusively made in standard pack quantity (SPQ); please order at least the SPQ quantity or a multiple thereof

2) Part no. includes one packing unit (PU); delivery is exclusively made in PU

Z-rails, perforated rails

		Z-rail for connectors		Perforated rail
		DIN EN 60603-2, DIN 41612 item 1	31-pin, DIN 41617	EN 606032, DIN 41612 item 1
		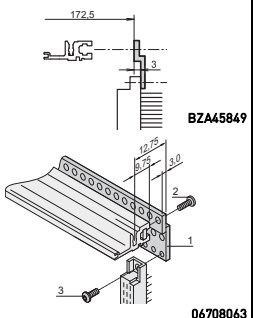 BZA45849 06708063	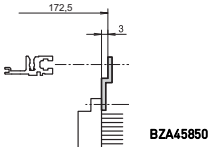 BZA45850	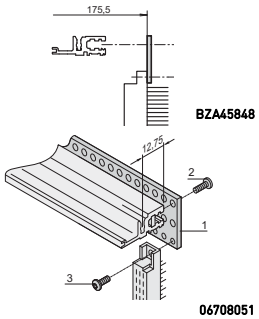 BZA45848 06708051
		For connector mounting with ST horizontal rails, please order threaded insert and screw separately	For connector mounting with ST horizontal rails, please order threaded insert and screw separately	For connector mounting with VT horizontal rails, please order threaded insert and screw separately
Usable length HP	Length mm	1 piece	1 piece	PU 4 pieces
28	142.24	**30822-033**	–	**20822-049**
42	213.36	**30822-047**	–	**20822-050**
60	304.80	**30822-065**	**30819-783**	**20822-047**
84	426.70	**30822-089**	**30819-808**	**20822-048**
Torx panhead screw, to fix connector to perforated rail,, M2.5 × 7, PU 100 piecesItem 3		**24560-147**	**24560-147**	**24560-147**
Torx panhead screw, to fix perforated rail to horizontal rail, M2.5 × 10, PU 100 pieces Item 2		**24560-148**	**24560-148**	**24560-148**

Divider plates

Order Information

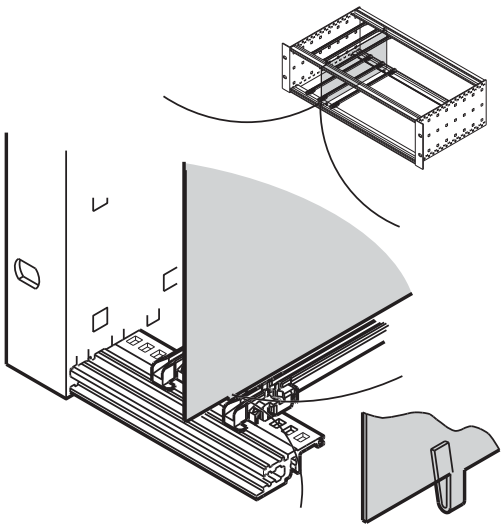

Divider plates

Mounting position for stainless steel EMC gasket

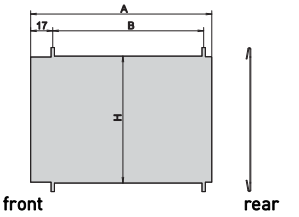

Mounting position for textile EMC gasket

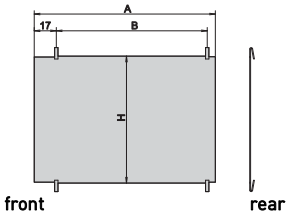

Stainless steel, 1 mm, is mounted by clipping onto horizontal rail, space requirement on component side 2 mm; mounting direction varies with shielding design (EMC stainless steel or textile gasket); retrofitting the divider plate in an already-assembled subrack/case will first require dismantling of the horizontal rails; where front panels are unshielded, both mounting directions are possible

Height	Depth	A	B	H	
U	mm	mm	mm	mm	1 piece
3	160	158.3	135.0	113.5	**34562-761**
3	220	218.3	195.0	113.5	**34562-762**
6	160	158.3	135.0	246.9	**34562-763**
6	220	218.3	195.0	246.9	**34562-764**

Desk-top cases – ratiopacPRO/ -air

Mounting plates

Order Information

			Mounting plate	Assembly strip for partial widths
			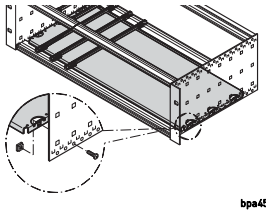 bpa45875	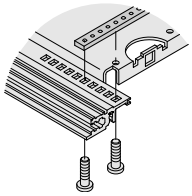 bpa46557
			Al, 1.5 mm; for mounting over partial width, please order assembly strips separately	St, 2 mm, zinc-plated; is bolted from front to rear onto the horizontal rails; to fix mounting plates
		06812002		
	Width	Board lengths		
HP	mm	mm	1 piece	1 piece
28	146.88	160	**34562-745**	**30840-021**
28	146.88	220	**34562-749**	**30840-033**
28	146.88	280	**34562-753**	**30840-045**
28	146.88	340	**34562-757**	**30840-057**
42	217.99	160	**34562-746**	**30840-021**
42	217.99	220	**34562-750**	**30840-033**
42	217.99	280	**34562-754**	**30840-045**
42	217.99	340	**34562-758**	**30840-057**
63	324.67	160	**34562-747**	**30840-021**
63	324.67	220	**34562-751**	**30840-033**
63	324.67	280	**34562-755**	**30840-045**
63	324.67	340	**34562-759**	**30840-057**
84	431.35	160	**34562-748**	**30840-021**
84	431.35	220	**34562-752**	**30840-033**
84	431.35	280	**34562-756**	**30840-045**
84	431.35	340	**34562-760**	**30840-057**
Assembly kit for mounting plate PU 1 kit (Torx countersunk screw M4 x 5, St, zinc-plated, 12 pieces; screw M4 x 6, St, zinc-plated, 10 pieces; M4 square nut, St, zinc-plated, 10 pieces)			**24560-184**	–
Assembly kit for assembly strips of mounting plate Torx screw M2.5 × 5, St, zinc-plated, PU 100 pieces			–	**24560-146**

Note

- Please order fixing material for assembly of mounting plate separately
- A guide rail can be mounted on the first and last slot position
- 4.4" and "reinforced" guide rails cannot be used

Desk-top cases – ratiopac PRO/ -air

Horizontal board installation

Order Information

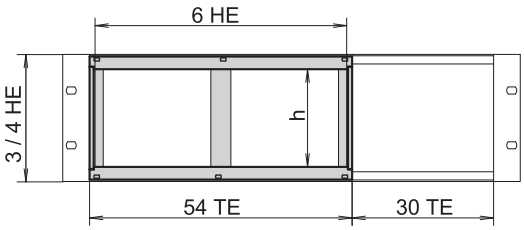

bpa45914

Height U	Usable height h HP	Other dimensions and options: Horizontal rail, front	Other dimensions and options: Horizontal rail, rear	Horizontal board installation: Board cage	Horizontal board installation: Front frame for EMC shielding	Horizontal board installation: Front frame, unshielded
				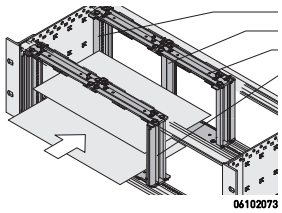 06102073	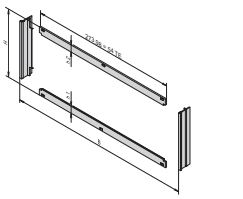 bpa45913	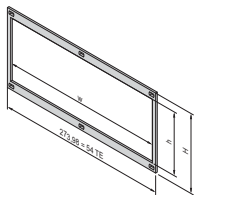 bza43061
				Struts die-cast zinc; horizontal rails front and rear; threaded insert, St, zinc-plated; fixing material kit; for horizontal mounting of double-height euroboards in 3 or 4 U high subracks/cases; 54 TE space required; **please order front frame for EMC shielding separately**	2 horizontal covers, Al, 2.5 mm, front anodised, rear iridescent green chromated; 2 vertical trims, Al extrusion, clear passivated; stainless steel EMC gasket; front frame forms the contact between subrack and the sub-assemblies	Al, 2.5 mm, clear anodised; front frame with cut-out, clear internal width w = 266.35 mm
				PU 1 kit	PU 1 kit	1 piece
3	20			**24564-117**	**24564-109**	34564-108
3	20			**24564-118**	**24564-109**	34564-109
4	28			**24564-217**	**24564-209**	**34564-208**
Assembly tool, for mounting the EMC gasket (stainless steel)		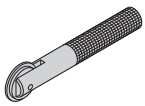		–	**24560-270**	–

* For direct backplane mounting

Note

- Please order front frame separately

Desk-top cases – ratiopac PRO/ -air

Combined mountings (6 U and 2 x 3 U one above the other)

Order Information

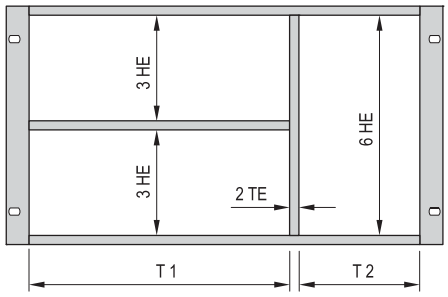 bza42182	Combined mounting Horizontal and vertical subdivision (incl. front panel for stainless steel EMC gasket) 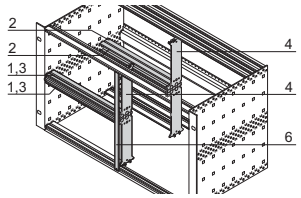 bpa46549 Item 1: 2 front horizontal rails (H-KD), Al extrusion, anodised; item 2: 2 rear horizontal rails (AB), Al extrusion, anodised; item 3: threaded insert, St, zinc-plated; item 4: Zn diecast support member; item 6: front panel 2 HP, 6 U, shielded; with EMC stainless steel gasket (84:0 without items 4, 6)	Alternative front panels for combined mounting Unshielded front panel, 6 U, 2 HP item 6 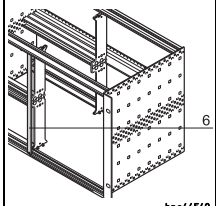 bpa46549 Al, 2.5 mm, front anodised, rear iridescent green chromated	Front panel for textile EMC gasket, 6 U, 2 HP item 6 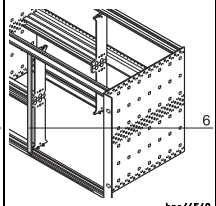 bpa46549 Al, 2.5 mm, U-profile with notch, 6 U, 2 HP	Splitting extrusion For combined mounting Item 2 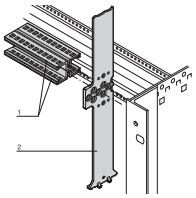 bza45857 6 U, die-cast zinc; splitting extrusion is inserted in the grid holes of the horizontal rail; the splitting extrusion can be bolted
Width pitch T1:T2 **HP**	**PU 1 kit**	**1 (SPQ 5)**	**1 piece (SPQ 5)[1)]**	**1 piece**
20:62	**24562-420**	**30847-472**	**30849-140**	**64560-010**
40:42	**24562-440**			
42:40	**24562-442**			
63:19	**24562-463**			
84:0	**24562-484**			
Countersunk screw with Torx M4 × 14, zinc-plated, PU 100 pieces fixing splitting extrusion/horizontal rail	–	–	–	**24560-145**
Panhead screw M2.5 × 10, St, zinc-plated, PU 100 pieces fixing horizontal rail/splitting extrusion	–	–	–	**24560-179**
Pozidrive/slotted collar screw M2.5 x 12.3, St, nickel-plated, PU 100 pieces	–	**21101-101**	**21101-101**	–
Pozidrive/slotted collar screw M2.5, black, zinc-plated, PU 100 pieces	–	**21101-102**	**21101-102**	–
Washer, 2.7 x 5 x 1, plastic PA 6, PU 100 pieces	–	**21101-121**	**21101-121**	–
Textile gasket, core: foam, sleeve: textile cladding with CuNi coating, UL 94 V-0, PU 10 pieces	–	–	**21101-855**	–

1) SPQ (standard pack quantity): Order number includes 1 piece, but delivery is exclusively made in standard pack quantity (SPQ); please order at least the SPQ quantity or a multiple thereof

- Subdivision of the 6 U assembly area into:
  - 2 x 3 U
  - 1 x 6 U
- Designed to accept Euroboards (100 mm high) and double Euroboards (233.35 mm high)

Note

- Please order EMC gasketing kit for horizontal rails separately, see page 5.19
- Please order perforated strips for horizontal rails separately, see page 5.35
- Please order rear centre horizontal rail separately, see page 5.33

Desk-top cases – ratiopac PRO/ -air

Guide rails for plug-in units and modules, one-piece, groove width 2 mm and 2.5 mm

Order Information

Assembly
- can be clipped into Al extruded horizontal rails
- can be clipped into 1.5 mm thick plates

Storage temperature
from -40 °C ... 130 °C

Board lengths mm	Groove width mm	Colour mm	For plug-in units and frame type plug-in units Standard 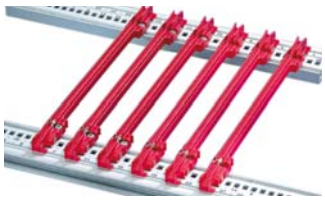 06101001 Up to 220 mm length, PBT, UL 94 V-0; from 280 mm length, multi-piece, end piece PBT, UL 94 V-0, central section Al extrusion PU 10 pieces[2)]	With DIN connector fixing as standard 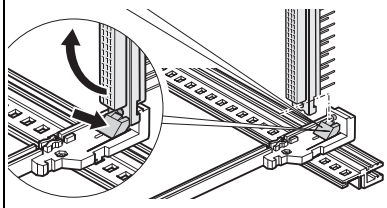 06101501 PBT, UL 94 V-0, red, connector is clipped directly onto the guide rails; for euroboards 100 x 160 mm or 100 x 220 mm only 1 pair (SPQ 10)[1)]
70	2	red	–	–
70	2	grey	–	–
160	2	red	**24560-351**	**64560-074**
220	2	red	**24560-353**	**64560-075**
280	2	red	**24560-379**	–
340	2	red	**24560-380**	–
160	2.5	red	–	–
220	2.5	red	–	–

Accessories

Retention screw, PU 100 pieces 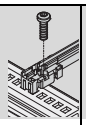	**24560-141**
ESD clip, PU 50 pieces	**24560-255**

1) SPQ (standard pack quantity): Order number includes 1 piece, but delivery is exclusively made in standard pack quantity (SPQ); please order at least the SPQ quantity or a multiple thereof

2) Part no. includes one packing unit (PU); delivery is exclusively made in PU

Description of accessories see from page 6.43

Desk-top cases – ratiopac PRO/ -air

Guide rails type "accessories", one-piece, groove width 2 mm and 2.5 mm

Order Information

Assembly
- can be clipped into horizontal rails in Al extrusion
- can be clipped into 1.5 mm thick plate

Storage temperature
from -40 °C ... +130 °C

Board lengths mm	Groove width mm	Colour mm	Guide rail type "Accessories"	"Accessories" strengthened	For heavy modules, Al extrusion, silver, robust version
			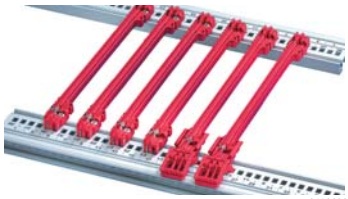 06102002 Up to 220 mm length, PBT, UL 94 V-0; > 280 mm length, multi-piece, end piece PBT, UL 94V-0, middle section Al extrusion	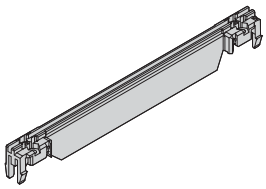 bza46554 PBT UL 94V-0, red; support beam of guide rails adds to strengthening	06102005 Al extrusion; is screwed to horizontal rail "heavy" with retention screws
			PU 10 pieces[2]	1 piece (SPQ 50)[1]	1 piece (SPQ 10)[1]
100	2	red	–	–	–
160	2	red	**24560-373**	**64560-076**	–
160	2	grey	–	–	**34562-881**
220	2	red	**24560-374**	**64560-078**	–
220	2	grey	–	–	**34562-882**
280	2	red/ silver	**24560-375**	**64560-080**	**34562-883**
340	2	red/ silver	**24560-376**	–	**34562-884**
400	2	red/ silver	–	–	**34562-885**
160	2.5	silver	–	–	**34564-881**
220	2.5	silver	–	–	**34564-882**
280	2.5	silver	–	–	**34564-883**
340	2.5	silver	–	–	**34564-884**
400	2.5	silver	–	–	**34564-885**

Accessories

Retention screw, PU 100 pieces 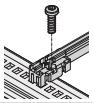	**24560-141**	**24560-141**	**24560-157**
ESD clip, PU 50 pieces	**24560-255**		–
Board locking C, red, PU 10 pieces	**24560-377**		–
Board handle C, red, PU 10 piecesdescription	**24560-378**		–
Identification strips for board handle, red, PU 1 sheet = 438 pieces	**60817-228**		–
Coding see page	6.43		–

1) SPQ (standard pack quantity): Order number includes 1 piece, but delivery is exclusively made in standard pack quantity (SPQ); please order at least the SPQ quantity or a multiple thereof

2) Part no. includes one packing unit (PU); delivery is exclusively made in PU

Description of accessories see from page 6.43

Desk-top cases – ratiopac PRO/ -air

Guide rails for CompactPCI, VME64x with coding, 4.4" PCBs, groove width 2 mm and 2.5 mm

Order Information

Assembly
- can be clipped into Al extruded horizontal rails
- can be clipped into1.5 mm thick plates

Storage temperature
from -40 °C ... 130 °C

			For CompactPCI, VME64x with coding		For 4.4" PCBs
			In accordance with IEEE 1101.10 and IEC 60297-3-103	Offset 0.1" for power supply units in accordance with IEEE 1101.10 and IEC 60297-3-103	
			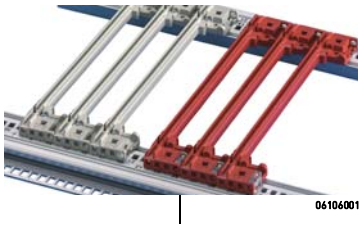 06106001	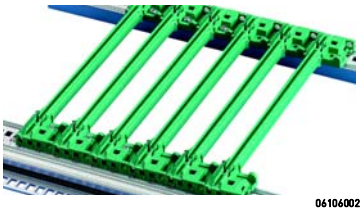 06106002	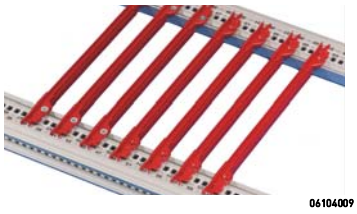 06104009
			One-piece for groove width 2 mm, PBT, UL 94 V-0; multi-piece at groove width 2,5 mm, end-piece PBT, UL 94 V-0, center piece Al profile	PBT, UL 94 V-0, for installation of power supplies in CompactPCI systems or plug-in units with SMD placement	One-piece, PBT, UL 94 V-0; for 4.4" PCBs or drive units
Board lengths mm	**Groove width** mm	**Colour** mm	**PU 10 pieces**[2]	**PU 10 pieces**[2]	**PU 10 pieces**
70	2	red	**24560-355**	–	–
70	2	grey	**24560-360**	–	–
160	2	red	**24560-356**	–	**24560-361**
160	2	grey	**24560-358**	–	–
160	2	green	–	**24560-359**	–
220	2	red	–	–	**24560-362**
220	2	grey	–	–	–
220	2	green	–	–	–
160	2.5	red	–	–	–
220	2.5	red	**24561-330**	–	–
220	2.5	grey	**24561-340**	–	–
280	2.5	red	**24561-331**	–	–
280	2.5	grey	**24561-341**	–	–
340	2.5	red	**24561-332**	–	–
340	2.5	grey	**24561-342**	–	–

Accessories

ESD clip, PU 50 pieces	**24560-255**	–	–
ESD clips, for alignment pin, PU 50 pieces	**24560-256**	**24560-256**	–
Retention screw, PU 100 pieces	**24560-141**	**24560-141**	**24560-158**
Coding peg, PU 100 pieces	**20817-501**	**20817-501**	–

1) SPQ (standard pack quantity): Order number includes 1 piece, but delivery is exclusively made in standard pack quantity (SPQ); please order at least the SPQ quantity or a multiple thereof

2) Part no. includes one packing unit (PU); delivery is exclusively made in PU

Description of accessories see from page 6.43

Note

- Reinforcement for plastic profiles (PVC) > 280 mm depth available on request

Desk-top cases – ratiopacPRO/ -air

Air baffle for slots

Order Information

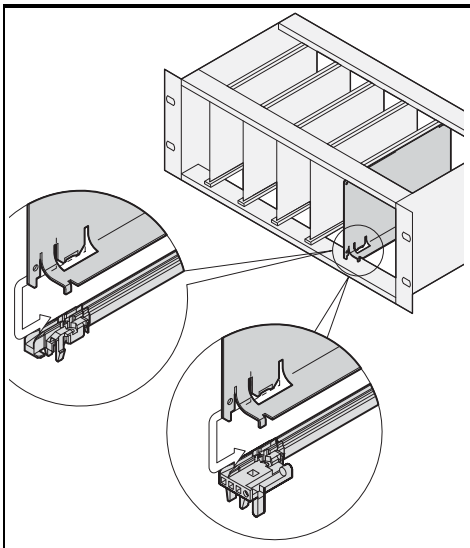

Depth mm	Width HP	Height U	Air baffle without front panel	Air baffle with front panel: front panel with lateral groove for stainless steel EMC gasket	Air baffle with front panel: U front panel for textile EMC gasket
			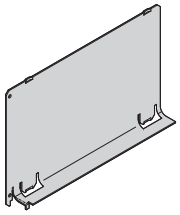 06108085 Al, 1 mm, incl. assembly kit; prevents an air short circuit in unoccupied slot positions; is pushed into the groove of the guide rails	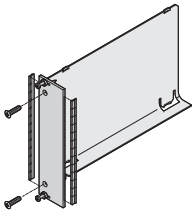 06108087 Air baffle, Al, 1 mm; front panel, Al, 2.5 mm, front anodised, rear conductive; EMC gasket (stainless steel); fixing material kit prevents an air short- circuit where slots are unoccupied; is pushed into the groove of the guide rails	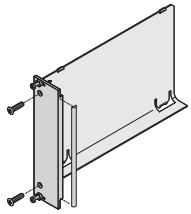 06108088 Air deflector, Al, 1 mm, front panel, Al extrusion, 2.5 mm, front anodised, rear conductive; EMC gasket (textile); fixing material kit prevents an air short-circuit where slots are unoccupied; is pushed into the groove of the guide rails
			1 piece	1 piece	1 piece
160	4	3	**34562-823**	**20848-712**	**20848-728**
160	4	6	**34562-826**	**20848-720**	**20848-736**
160	8	3	**34562-833**	20848-714	20848-730
160	8	6	**34562-836**	20848-722	20848-738
160	12	3	**34562-843**	20848-716	20848-732
160	12	6	**34562-846**	20848-724	20848-740
220	4	3	**34562-824**	20848-713	20848-729
220	4	6	34562-827	20848-721	20848-737
220	8	3	34562-834	20848-715	20848-731
220	8	6	34562-837	20848-723	20848-739
220	12	3	34562-844	20848-717	20848-733
220	12	6	34562-847	20848-725	20848-741
Assembly tool for EMC gasket (stainless steel), 1 piece 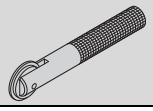			–	**24560-270**	–

Note

- Air baffle for 280 mm deep and for 80 mm rear I/O boards available on request

Content

Desk-top cases – propacPRO

Cabinets 1

Wall mounted cases 2

Accessories for cabinets and wall mounted cases . 3

Climate control . 4

Electronics cases 5

Subracks/ 19" chassis 6

Front panels, plug-in units . . . 7

Systems 8

Power supply units 9

Backplanes . . . 10

Connectors, front panel component system 11

Appendix 12

05809001

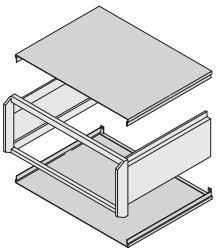

05806052

Easy access provided by removable cladding parts

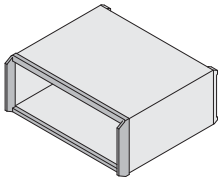

05806050

Extremely robust one-piece die-cast frame

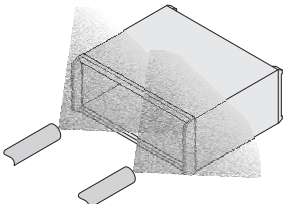

05806055

Non-sensitive, scratch-resistant finish through powder coating

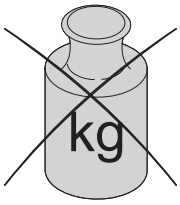

05806056

Low weight

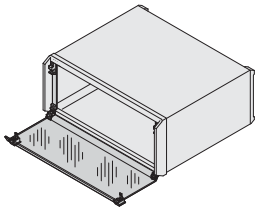

05806054

Wide accessory programme with acrylic glass front hoods, carrying handles, ...

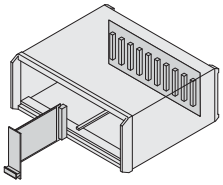

05806053

Assembly possibility for euroboards and backplanes

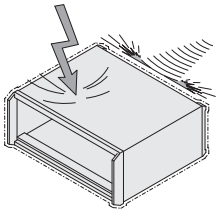

05806051

EMC version

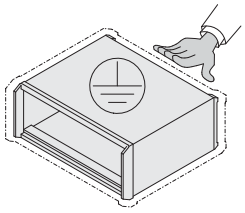

noa44075

VDE-compliant GND/earthing

Standards

- Internal dimensions in accordance with IEC 60297-3-101
- Ingress protection IP 20 in accordance with IEC 60529
- EMC test in accordance with VG 95373 part 15
- Protective GND/earth connections in accordance with:
  DIN EN 50178 / VDE 0160
  DIN EN 60950 / VDE 0805
  DIN EN 61010-1 / VDE 0411 part 1
  DIN EN 61010-1A2 / VDE 0411 part 1/A1

Desk-top cases – propacPRO

Overview 5.44

Aluminium case for 19" components to IEC 60297-3-100 or individual electronics assemblies

- Front frame and side panels in aluminium
- Extensive accessories, matched to portable applications
- Basic level shielding from basic versions up, extended EMC shielding retrofittable
- Design alternative to compacPRO

Desktop cases

- **Complete case (pre-assembled)**
  - Prepared for 19" components to IEC 60297 for installation of euroboards
  - Basic level shielding from basic versions up, extended EMC shielding retrofittable
  - Height 3 U, 6 U

05809003 05806003

- **Cases**
  - Pre-assembled cases as basis for individual components or 19" components (IEC 60297)
  - Basic level shielding from basic versions up, extended EMC shielding retrofittable
  - Height: 2 U, 3 U, 4 U, 6 U
  - 3 U and 4 U cases prepared for tip-up carrying handle

05809002

Accessories

30407004

ServicePLUS from page 5.4

e.g. modifications (special colours, special depths, cut-outs in top cover, base plate or side panels)
e.g. assembly service from 1 piece

www.schroff.biz/ServicePLUS

propacPRO
Complete cases 3, 6 U, unshielded/ shielded 5.46
Cases 2, 3 U 5.50
Cases 4, 6 U 5.51
Cases for tip-up carrying handle 3, 4 U. 5.52
Dimensions 5.53
EMC shielding . . . 5.55

Accessories
Front panels 5.54
Rear panels 5.55
Design elements . 5.58
Lateral covers . . . 5.59
Handles 5.60
Air filters 5.61
Hoods 5.62
Mounting plates . . 5.64
GND/earthing kit . 5.65
Cable holder 5.65
Mounting position horizontal/central rails 5.66
Horizontal rails . 5.67
Threaded inserts . 5.68
Z-rails, perforated rails . . 5.69
Combined mounting 5.70
Horizontal board assembly 5.71
Tip-up feet 5.72
Guide rails and ESD clips 5.73
Divider plates 5.75
Air flow barrier . . . 5.75

ServicePLUS . . 5.4

Desk-top enclosure – propacPRO

Complete case, EMC shielded

05809004

3 U

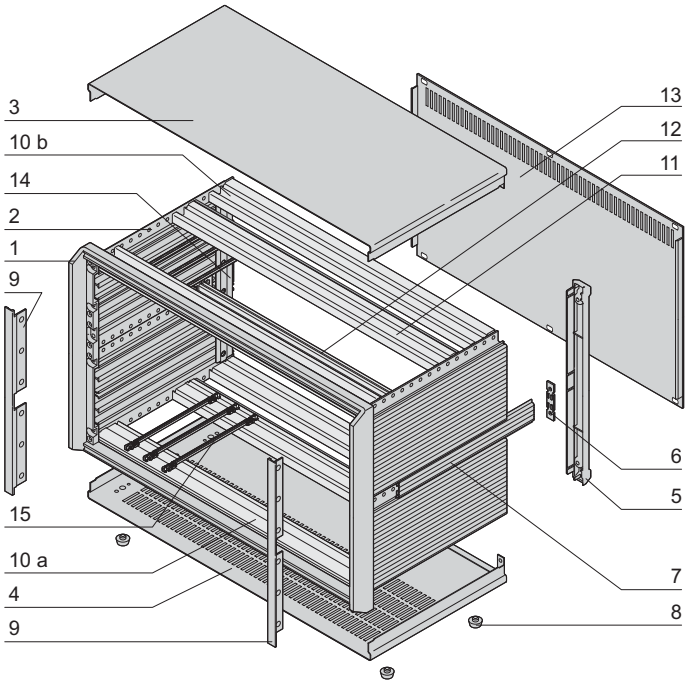

05806106

Maximum mounting depth = D - 45
(Distance: front panel - rear panel)

ServicePLUS see page 5.4

- Desk-top case with pre-configured components, in accordance with IEC 60297-3-101; prepared for 19" components such as plug-in units and euroboards
- Ventilation slots in base plate
- Rear panel with vent slots

Delivery comprises (Items 1-7, 9 and 10 fitted)

Item	Qty 3 U	Qty 6 U	Description
1	1	1	Frame, Al die-cast, powder-coated, RAL 7016
2	2	4	Side panel, Al extrusion, powder-coated, RAL 9006, with EMC side panel gasketing
3	1	1	Cover plate, Al, 1 mm, internal surface conductive, visible surface powder-coated, RAL 9006, with GND/earthing tag
4	1	1	Base plate, Al, 1 mm, internal surface conductive, visible surface powder-coated, RAL 9006, with GND/earthing tag, base plate with 4 rows of ventilation slots
5	2	2	End piece for rear, ABS, RAL 7016, UL 94 V-0; can be used as a foot when case is used in vertical position
6	-	2	Adaptor bracket (only at 6 U)
7	-	2	Cover trim for side panel, Al extrusion, powder-coated, RAL 9006
8	4	4	Case foot with anti-slip protection, PC, black, UL 94 V-0
9	2	2	Lateral trim, Al extrusion, visible surface painted, RAL 7016 with EMC sealing (textile)
10a	2	2	Horizontal rail, Al extrusion, with threaded insert, St, M2.5; perforated strip, Al, 1 mm, EMC contact strip between front panel - horizontal rail - cover plate
10b	2	2	Horizontal rail, Al extrusion, with threaded insert, St, M2.5; EMC contact strip between rear panel - horizontal rail - cover plate
11	2	2	Centre horizontal rail top/bottom, Al extrusion, with threaded insert, St, M2.5 and insulation strip, PBT, UL 94 V-0 (for indirect backplane mounting); enclosed loose
12	-	1	Centre horizontal rail, Al extrusion, anodised, conductive surfaces, with two threaded inserts, St, M2.5 and two insulation strips, PBT, UL 94 V-0
13	1	1	Rear panel with perforation, Al, 2.5 mm, anodised, with EMC sealing (textile) affixed
14	2	2	EMC support profile rear, Al extrusion, EMC sealing (textile) affixed
15	10/20	10/20	Guide rail for 160 mm board length, PBT, UL 94 V-0, 28/42 HP 10 pieces, 63/84 HP 20 pieces
16	1	1	GND/earthing kit
17	1	1	Assembly kit

Desk-top enclosure – propacPRO

Complete cases, EMC shielded

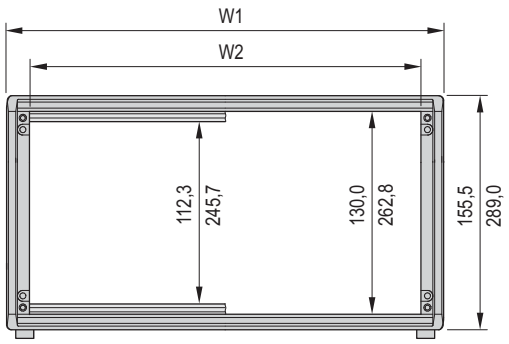

05809051

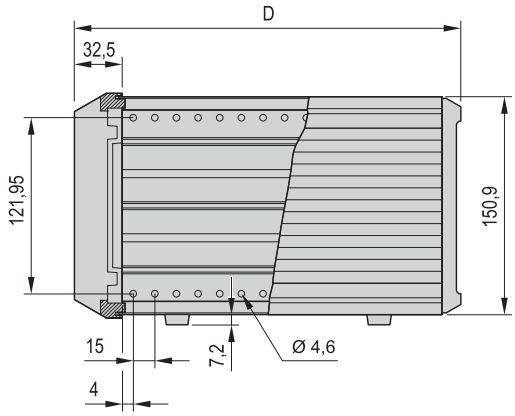

05806060

3 U

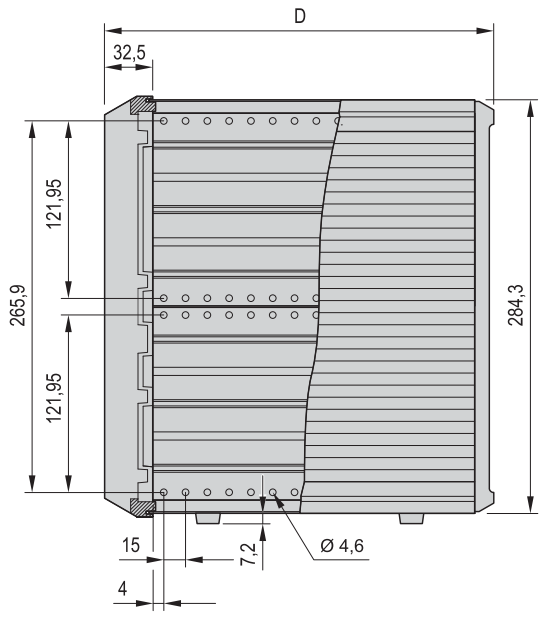

05806062

6 U

Order Information

Usable width W2 HP	W2 mm	Width W1 W1 mm	Depth D D mm	Height U	Part no.
28	147.3	185.9	266	3	**24576-101**
28	147.3	185.9	326	3	**24576-102**
42	218.4	257	266	3	**24576-103**
42	218.4	257	326	3	**24576-104**
42	218.4	257	386	3	**24576-105**
63	325.1	363.7	266	3	**24576-106**
63	325.1	363.7	326	3	**24576-107**
63	325.1	363.7	386	3	**24576-108**
84	431.8	470.3	266	3	**24576-109**
84	431.8	470.3	326	3	**24576-110**
84	431.8	470.3	386	3	**24576-111**
84	431.8	470.3	446	3	**24576-112**
84	431.8	470.3	506	3	**24576-113**
84	431.8	470.3	326	6	**24576-121**
84	431.8	470.3	446	6	**24576-122**

Note

- Dimension drawings of side panel see from page 5.53

Desk-top enclosure – propacPRO

Complete cases, unshielded

05809004

3 U

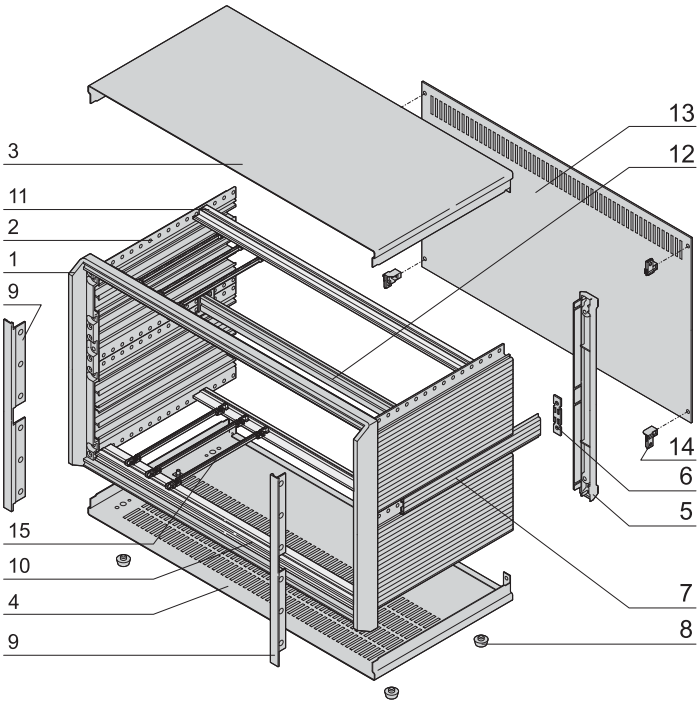

05806105

Maximum mounting depth = D - 45
(Distance: front panel - rear panel)

ServicePLUS see page 5.4

- Desk-top case with pre-configured components, in accordance with IEC 60297-3-101; prepared for 19" components such as plug-in units and euroboards
- Ventilation slots in base plate
- Rear panel perforated

Delivery comprises (Items 1-7, 9 and 10 fitted)

Item	Qty 3 U	Qty 6 U	Description
1	1	1	Frame, Al die-cast, powder-coated, RAL 7016
2	2	4	Side panel, Al extrusion, powder-coated, RAL 9006
3	1	1	Cover plate, Al, 1 mm, internal surface conductive, visible surface powder-coated, RAL 9006, with GND/earthing tag
4	1	1	Base plate, Al, 1 mm, internal surface conductive, visible surface powder-coated, RAL 9006, with GND/earthing tag, base plate with 4 rows of ventilation slots
5	2	2	End piece for rear, ABS, RAL 7016, UL 94 V-0; can be used as a foot for use in vertical position
6	-	2	Adaptor bracket (only at 6 U)
7	-	2	Cover trim for side panel, Al extrusion, powder-coated, RAL 9006
8	4	4	Case foot with anti-slip protection, PC, black, UL 94 V-0
9	2	2	Lateral trim, Al extrusion, visible surface painted, RAL 7016 with EMC sealing (textile)
10	2	2	Horizontal rail, Al extrusion, with threaded insert, St, M2.5
11	2	2	Rear horizontal rail, Al extrusion, with threaded insert, St, M2.5 and insulation strips, PBT, UL 94 V-0 (for indirect backplane mounting)
12	-	1	Centre horizontal rail, Al extrusion, anodised, conductive surfaces, with two threaded inserts, St, M2.5 and two insulation strips, PBT, UL 94 V-0
13	1	1	Rear panel with perforation, Al, anodised, 2 mm at 28, 42 and 63 HP, 2.5 mm at 84 HP
14	4	4	Support member for rear panel, Zn die-cast
15	10/20	10/20	Guide rail for 160 mm board length, PBT, UL 94 V-0, 28/42 HP 10 pieces, 63/84 HP 20 pieces
16	1	1	GND/earthing kit
17	1	1	Assembly kit

Desk-top enclosure – propacPRO

Complete cases, unshielded

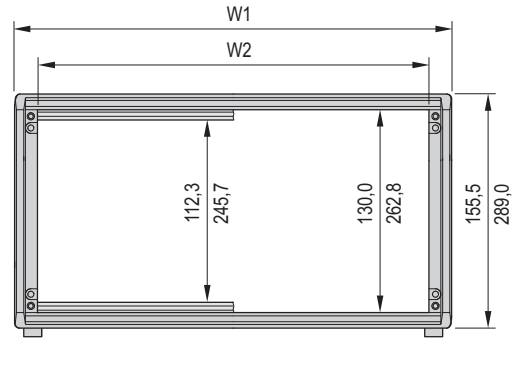

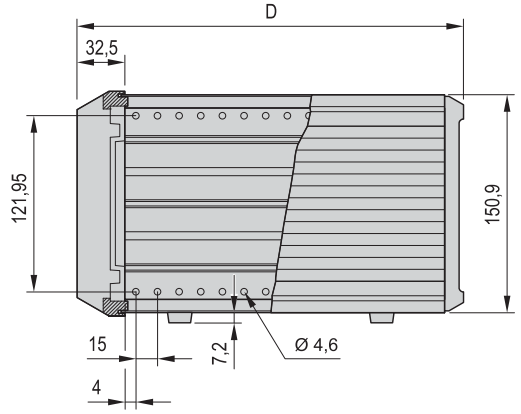

3 U

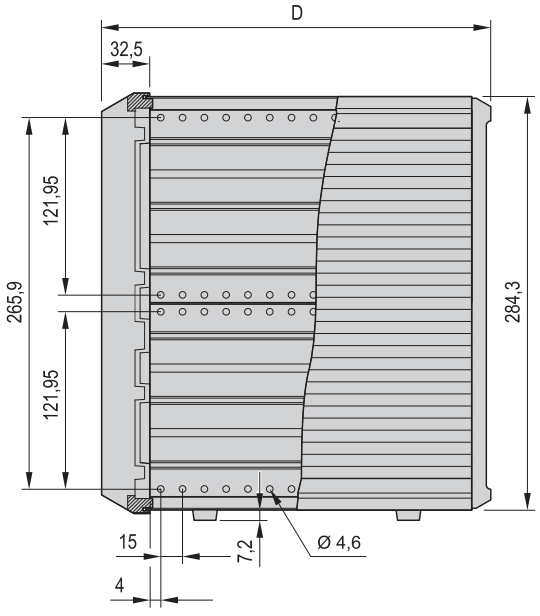

6 U

Order Information

Usable width W2 HP	W2 mm	Width W1 mm	Depth D mm	Height U	Part no.
28	147.3	185.9	266	3	**24576-001**
28	147.3	185.9	326	3	**24576-002**
42	218.4	257	266	3	**24576-003**
42	218.4	257	326	3	**24576-004**
42	218.4	257	386	3	**24576-005**
63	325.1	363.7	266	3	**24576-006**
63	325.1	363.7	326	3	**24576-007**
63	325.1	363.7	386	3	**24576-008**
84	431.8	470.3	266	3	**24576-009**
84	431.8	470.3	326	3	**24576-010**
84	431.8	470.3	386	3	**24576-011**
84	431.8	470.3	446	3	**24576-012**
84	431.8	470.3	506	3	**24576-013**
84	431.8	470.3	326	6	**24576-021**
84	431.8	470.3	446	6	**24576-022**

Maximum mounting depth = D - 45
(Distance: front panel - rear panel)

Note

- Dimension drawings of side panel see from page 5.53

Desk-top enclosure – propacPRO

Cases, 2 and 3 U, unshielded

05806001

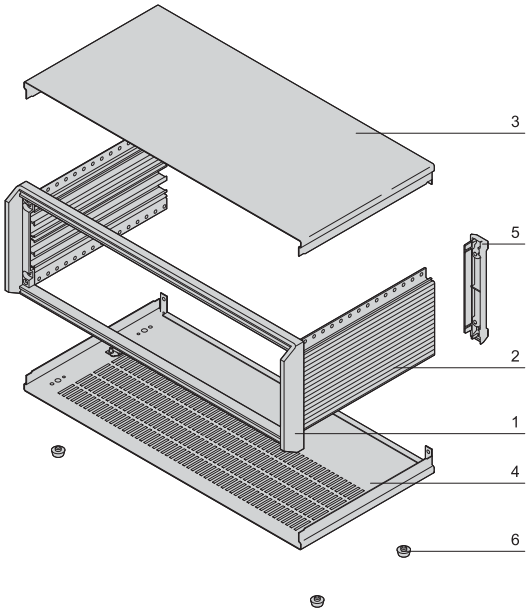

05806057

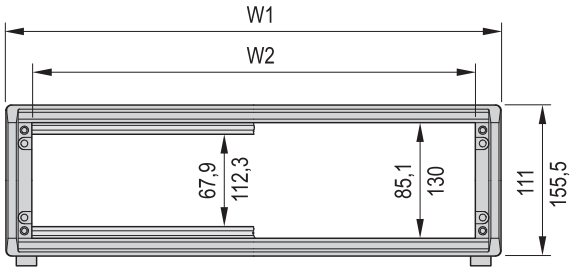

05806077

Cross-section 2 U, 3 U

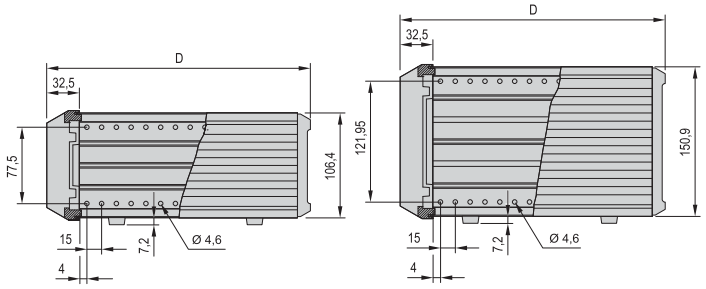

05806059 05806060

2 U 3 U

- Desk-top case with pre-configured components, in accordance with IEC 60297-3-101; prepared for 19" components such as plug-in units and euroboards
- Ventilation slots in base plate
- Prepared for GND/earthing

Delivery comprises (kit, items 1 - 5 fitted)

Item	Qty	Description
1	1	Frame, Al die-cast, powder-coated, RAL 7016
2	2	Side panel, Al extrusion, powder-coated, RAL 9006
3	1	Cover plate, Al, 1 mm, internal surface conductive, visible surface powder-coated, RAL 9006, with GND/earthing tag
4	1	Base plate, Al, 1 mm, internal surface conductive, visible surface powder-coated, RAL 9006, with GND/earthing tag, base plate with 4 rows of ventilation slots
5	2	End piece for rear, ABS, RAL 7016, UL 94 V-0; can be used as a foot for use in vertical position
6	4	Case foot with anti-slip protection, PC, black, UL 94 V-0
7	1	Assembly kit

Order Information

Usable width W2 HP	Width W1 W2 mm	Depth D mm	2 U Part no.	3 U Part no.
28	147.3	185.9	–	14576-101
28	147.3	185.9	326	–	14576-103
42	218.4	257	266	**14576-021**	**14576-121**
42	218.4	257	326	**14576-023**	**14576-123**
42	218.4	257	386	–	**14576-125**
63	325.1	363.7	266	14576-041	14576-141
63	325.1	363.7	326	14576-043	14576-143
63	325.1	363.7	386	**14576-045**	14576-145
84	431.8	470.3	266	–	14576-161
84	431.8	470.3	326	–	**14576-163**
84	431.8	470.3	386	–	14576-165
84	431.8	470.3	446	–	14576-167
84	431.8	470.3	506	–	14576-169

Accessories

GND/earthing kit Cu wire 1.5 mm2, PVC sleeve, green/yellow, links side panels, base, cover and rear panel, PU 1 piece	**21102-001**

Maximum mounting depth = D - 45
(Distance: front panel - rear panel)

Note

- Case, 3 U with side panel for tip-up carrying handle, see page 5.52
- Dimensions see page 5.48
- Dimensions side panel, see page 5.53

ServicePLUS see page 5.4

Desk-top enclosure – propacPRO

Cases, 4 and 6 U, unshielded

05806003

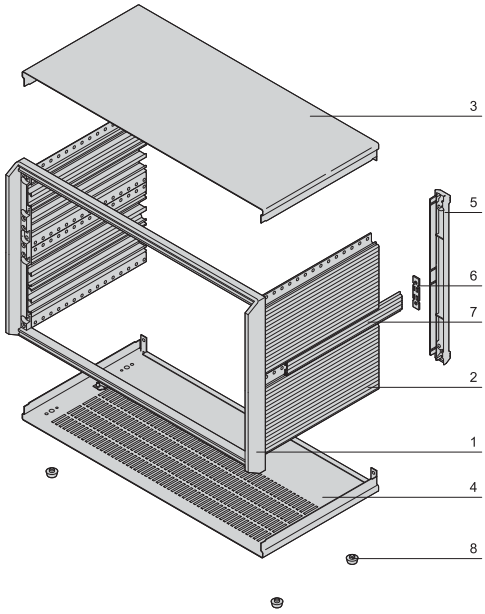

05806058

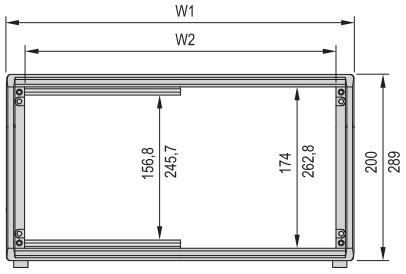

05806078

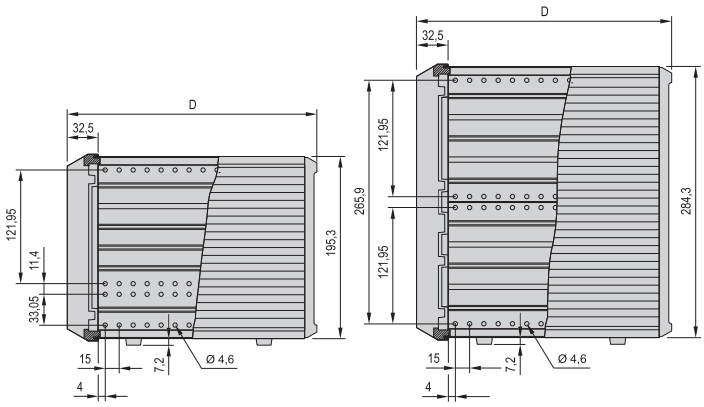

05806061 05806062

4 U 6 U

- Desk-top case with pre-configured components, in accordance with IEC 60297-3-101; prepared for 19" components such as plug-in units and euroboards
- Ventilation slots in base plate
- Prepared for GND/earthing

Delivery comprises (kit, items 1 - 6 fitted)

Item	Qty 4 U	Qty 6 U	Description
1	1	1	Frame, Al die-cast, powder-coated, RAL 7016
2	2	4	Side panel, Al extrusion, powder-coated, RAL 9006
3	1	1	Cover plate, Al, 1 mm, internal surface conductive, visible surface powder-coated, RAL 9006, with GND/earthing tag
4	1	1	Base plate, Al, 1 mm, internal surface conductive, visible surface powder-coated, RAL 9006, with GND/earthing tag, base plate with 4 rows of ventilation slots
5	2	2	End piece for rear, ABS, RAL 7016, UL 94 V-0; can be used as a foot for use in vertical position
6	–	2	Adaptor bracket, Al
7	2	2	Cover trim for side panel, Al extrusion, powder-coated, RAL 9006
8	4	4	Case foot with anti-slip protection, PC, black, UL 94 V-0
9	1	1	Assembly kit

Order Information

Usable width W2 HP	W2 mm	Width W1 mm	Depth D mm	4 U Part no.	6 U Part no.
42	218.4	257	266	14576-221	–
42	218.4	257	326	14576-223	–
63	325.1	363.7	266	14576-241	–
63	325.1	363.7	326	14576-243	–
63	325.1	363.7	386	**14576-245**	–
63	325.1	363.7	446	14576-247	–
84	431.8	470.3	326	–	14576-463
84	431.8	470.3	386	14576-265	14576-465
84	431.8	470.3	446	14576-267	14576-467
84	431.8	470.3	506	14576-269	14576-469

Accessories

GND/earthing kit Cu wire 1.5 mm2, PVC sleeve, green/yellow, links side panels, base, cover and rear panel, PU 1 piece	**21102-001**

Maximum mounting depth = D - 45
(Distance: front panel - rear panel)

Note

- Case, 4 U with side panel for tip-up carrying handle, see page 5.52
- Dimensions side panel, see page 5.53

ServicePLUS see page 5.4

Desk-top enclosure – propacPRO

3 U and 4 U cases, unshielded, with holes for tip-up carrying handle

05812006

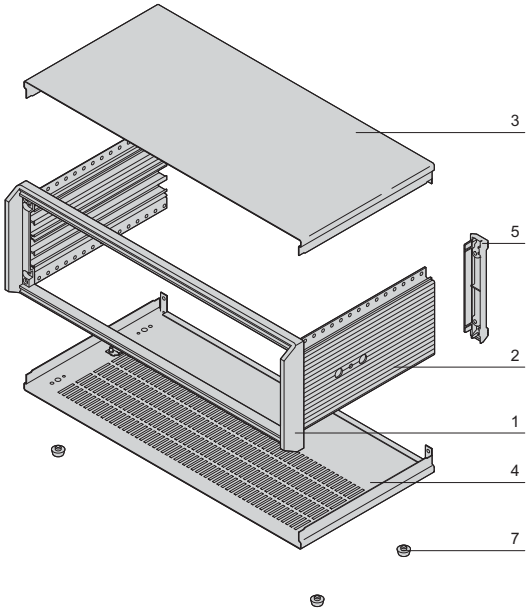

05812050

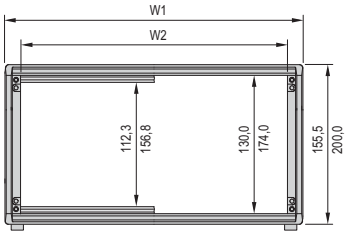

05812051

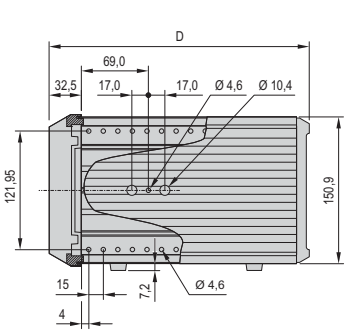

05812052

3 U

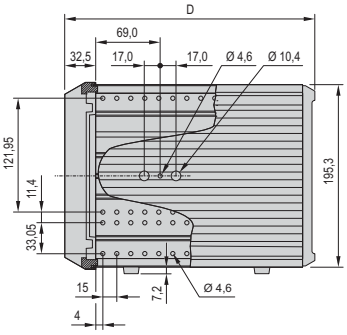

05812053

4 U

- Desk-top case with pre-configured components, in accordance with IEC 60297-3-101; prepared for 19" components such as plug-in units and euroboards
- Ventilation slots in base plate
- Prepared for GND/earthing
- Prepared for fitting of tip-up carrying handle

Delivery comprises (kit, items 1 - 6 fitted)

Item	Qty 3 U	Qty 4 U	Description
1	1	1	Frame, Al die-cast, powder-coated, RAL 7016
2	2	4	Side panel, Al extrusion, powder-coated, RAL 9006; with drill holes for tip-up carrying handle
3	1	1	Cover plate, Al, 1 mm, internal surface conductive, visible surface powder-coated, RAL 9006, with GND/earthing tag
4	1	1	Base plate, Al, 1 mm, internal surface conductive, visible surface powder-coated, RAL 9006, with GND/earthing tag, base plate with 4 rows of ventilation slots
5	2	2	End piece for rear, ABS, RAL 7016, UL 94 V-0; can be used as a foot for use in vertical position
6	–	2	Cover trim for side panel, Al extrusion, powder-coated, RAL 9006
7	4	4	Case foot with anti-slip protection, PC, black, UL 94 V-0
8	1	1	Assembly kit

Order Information

Usable width W2 HP	W2 mm	Width W1 mm	Depth D mm	3 U Part no.	4 U Part no.
42	218.4	257.0	326	14577-123	14577-223
42	218.4	257.0	386	14577-125	–
63	325.1	363.7	326	14577-143	14577-243
63	325.1	363.7	386	14577-145	14577-245
84	431.8	470.3	326	14577-163	–
84	431.8	470.3	386	14577-165	14577-265
Accessories					
GND/earthing kit Cu wire 1.5 mm2, PVC sleeve, green/yellow, links side panels, base, cover and rear panel , PU 1 piece					**21102-001**
Tip-up carrying handle for 42 HP case width, PU 1 kit					**24576-071**
Tip-up carrying handle for 63 HP case width, PU 1 kit					**24576-072**
Tip-up carrying handle for 84 HP case width, PU 1 kit					**24576-073**

Note

- Dimensions see page 5.48
- Dimensions side panel, see page 5.53

ServicePLUS see page 5.4

Desk-top enclosure – propacPRO

Dimensions

Extruded side panel 2 U

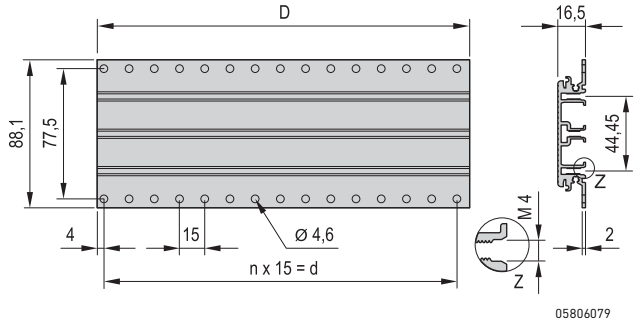

Extruded side panel 3 U

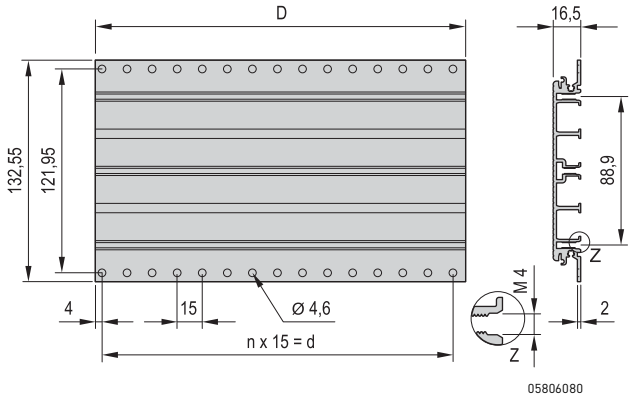

Extruded side panel 4 U, right

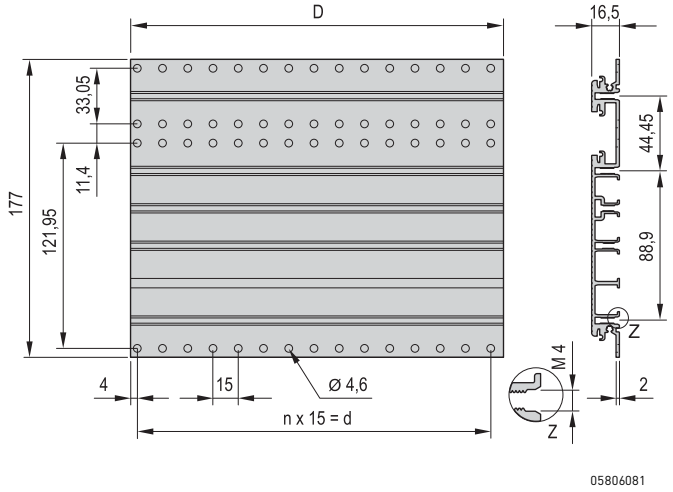

Extruded side panel 4 U, left

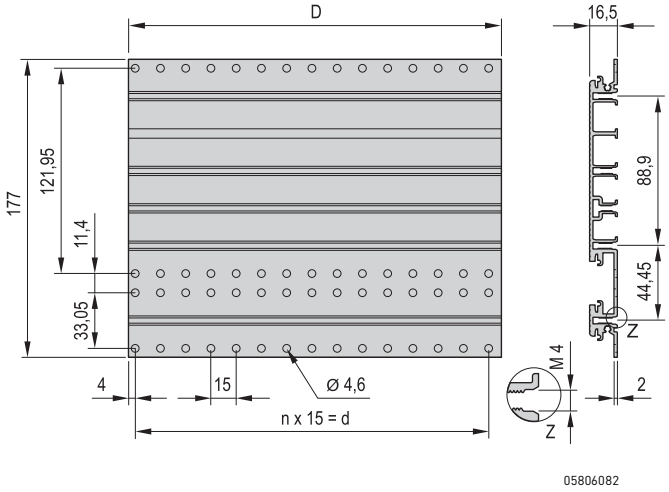

Extruded side panel 6 U

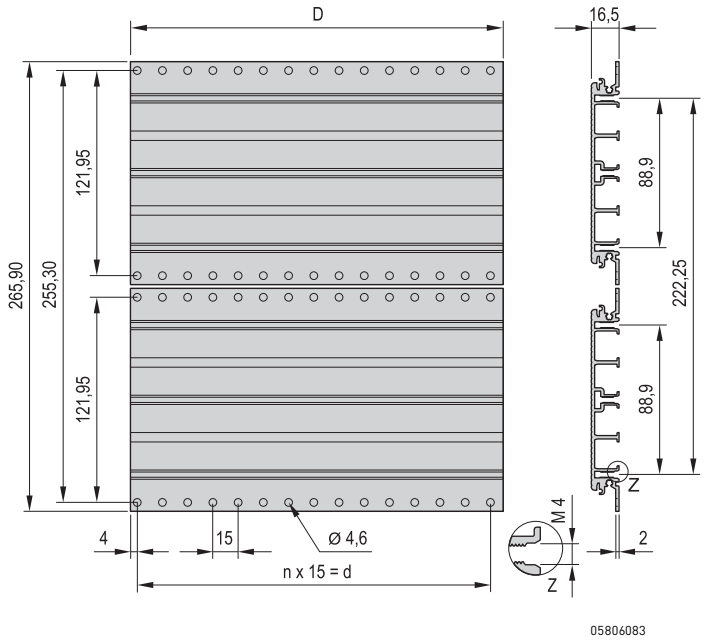

Dimensions table

For case depth	D	d	n
mm	mm	mm	
266	221.6	210	14
326	281.6	270	18
386	341.6	330	22
446	401.6	390	26
506	461.6	450	30

Note

A side panel for case 6 U consists of 2 pieces 3 U extruded side panels

Side panel with horizontal rail

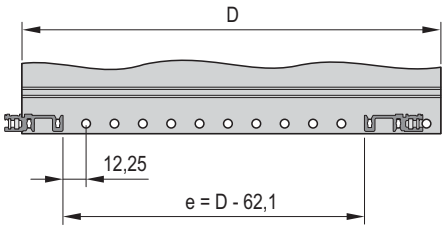

Desk-top enclosure – propacPRO

Front panel, unshielded, for mounting on case frame

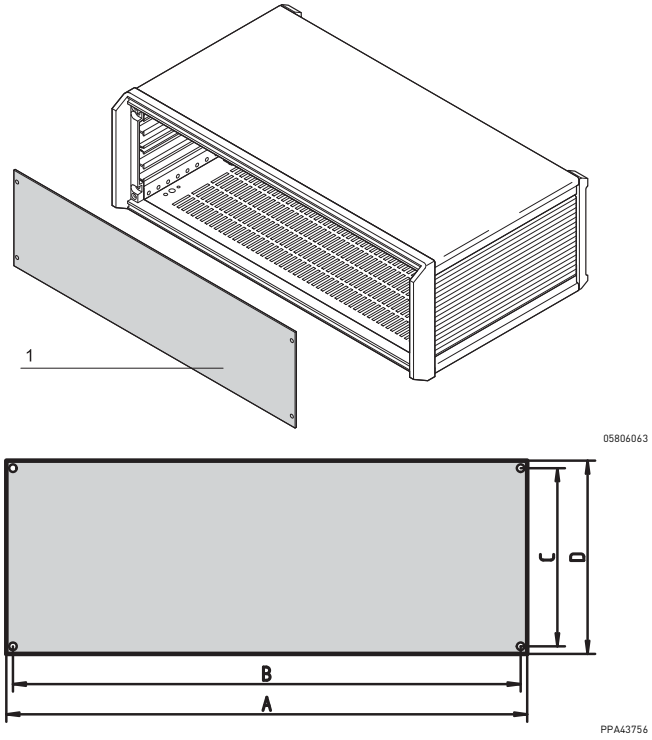

Delivery comprises

Item	Qty	Description
1	1	Full-width front panel, Al, 2 mm (on 84 HP = 2.5 mm), anodised, cut edges plain
2	1	Assembly kit

Order Information

For case height U	For case width HP	A mm	B mm	C mm	D mm	Part no.
2	42	238.7	230.0	74.0	84.0	**20850-128**
2	63	345.4	336.7	74.0	84.0	**20850-129**
2	84	452.0	443.3	74.0	84.0	20850-130
3	28	167.6	158.9	118.5	128.5	**20850-134**
3	42	238.7	230.0	118.5	128.5	**20850-135**
3	63	345.4	336.7	118.5	128.5	**20850-136**
3	84	452.0	443.3	118.5	128.5	**20850-137**
4	42	238.7	230.0	162.9	172.9	**20850-142**
4	63	345.4	336.7	162.9	172.9	**20850-143**
4	84	452.0	443.3	162.9	172.9	**20850-144**
6	84	452.0	443.3	251.8	261.8	**20850-158**

■ EMC front panel see chapter Front Panels, page 7.7

Front panel, 1 U, unshielded, for 4 U case, for mounting on horizontal rails

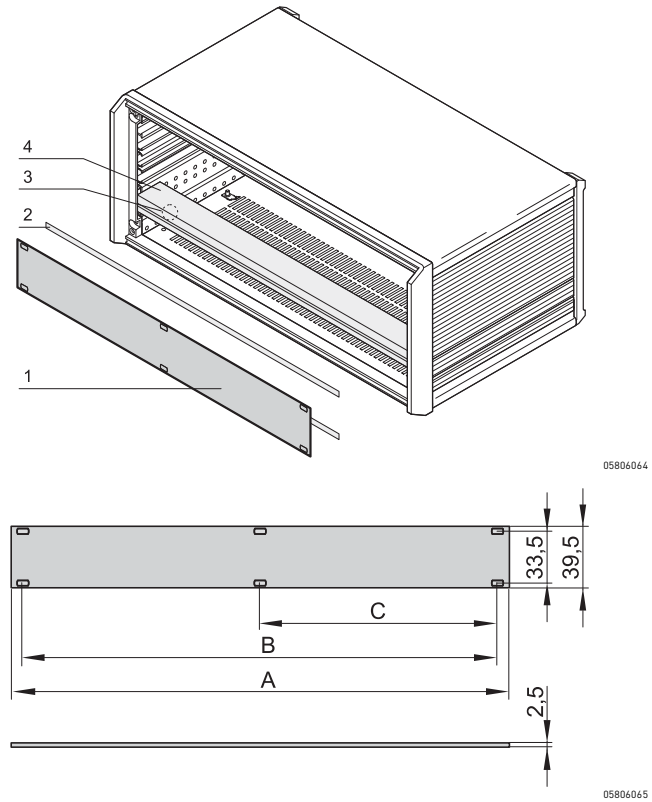

Delivery comprises

Item	Qty	Description
1	1	Front panel, Al, 2.5 mm, front anodised, rear iridescent green chromated

Order Information

Width HP	A mm	B mm	C mm	Front panel Part no.
28	141.9	127.0	–	**20850-423**
42	213.0	198.1	101.6	**20850-424**
63	319.7	304.8	157.5	**20850-425**
84	426.4	411.5	203.2	**20850-426**

Note

■ Please order items 2, 3 and 4 separately

Width HP	Item 2 EMC gasket, front panel/horizontal rail PU 10 pieces Part no.	Item 3 EMC gasketing kit horizontal rails, 1 piece Part no.	Item 4 Horizontal rail type H-KD, 1 piece (SPQ 10)1) Part no.
28	**24560-229**	**24562-528**	**34560-228**
42	**24560-231**	**24562-542**	**34560-242**
63	**24560-233**	**24562-563**	**34560-263**
84	**24560-235**	**24562-584**	**34560-284**

1) SPQ (standard pack quantity): Order number includes 1 piece, but delivery is exclusively made in standard pack quantity (SPQ); please order at least the SPQ quantity or a multiple thereof

Desk-top enclosure – propacPRO

Rear panel, perforated, for mounting on horizontal rails

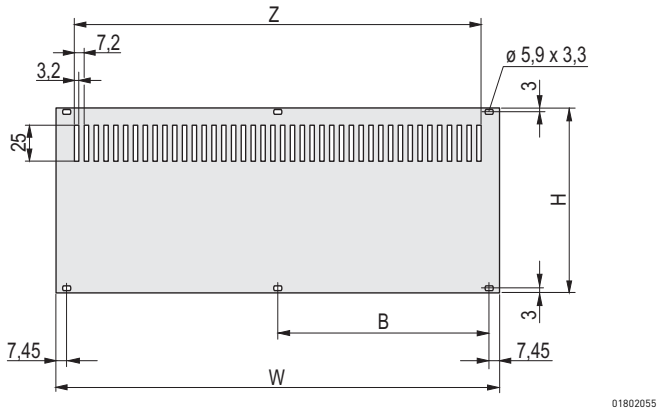

Unshielded

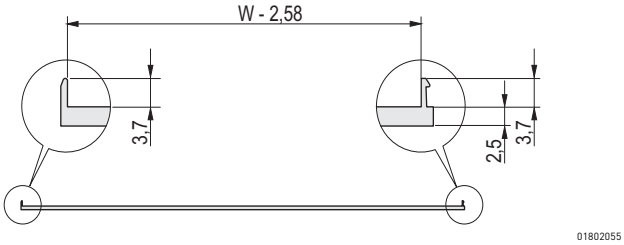

Shieldable

- Two versions: unshielded, Al, 2.5 mm shieldable, Al extrusion (textile EMC gasketing retrofittable)

Delivery comprises

Item	Qty	Description
1	1	Rear panel, Al, 2.5 mm, front: anodised, rear: iridescent green chromated; unshielded or shieldable with EMC sealing (textile)

Order Information

Height U	H mm	Width W HP	W mm	B mm	h mm	unshielded Part no.	shieldable Part no.
2	84	28	141.9	–	78	**30849-007**	20848-679
2	84	42	213	101.6	78	**30849-014**	20848-680
2	84	63	319.7	157.5	78	**30849-015**	20848-681
2	84	84	426.4	208.3	78	**30849-016**	20848-682
3	128.4	28	141.9	–	122.4	**30849-008**	**20848-633**
3	128.4	42	213	101.6	122.4	**30849-021**	20848-634
3	128.4	63	319.7	157.5	122.4	**30849-022**	20848-635
3	128.4	84	426.4	208.3	122.4	**30849-023**	**20848-636**
4	172.9	28	141.9	–	166.9	**30849-009**	20848-656
4	172.9	42	213	101.6	166.9	**30849-028**	20848-657
4	172.9	63	319.7	157.5	166.9	**30849-029**	20848-658
4	172.9	84	426.4	208.3	166.9	**30849-030**	20848-659
6	261.8	28	141.9	–	255.8	**30849-010**	20848-640
6	261.8	42	213	101.6	255.8	**30849-035**	**20848-641**
6	261.8	63	319.7	157.5	255.8	**30849-036**	20848-642
6	261.8	84	426.4	208.3	255.8	**30849-037**	**20848-643**

- Please order textile EMC gasket separately
- EMC gasket rear panel - horizontal rail see page 5.65
- Horizontal rails see page 5.67
- Assembly parts see page 6.63

Textile EMC gasket

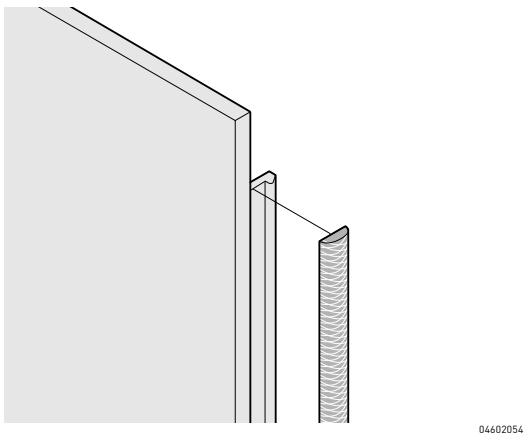

- The textile EMC gasket is glue fixed laterally on the front panel, always in the groove on the right-hand side of the profile
- Temperature range -40 °C ... +70 °C

Delivery comprises ()

Item	Qty	Description
1	10/100	Textile EMC gasket, core: foam, sleeve: textile cladding with CuNi coating

Order Information

Height U	Height mm	Qty/PU pieces	Part no.
2	52	10	**21101-857**
3	97	100	**21101-854**
3	97	10	**21101-853**
4	142	10	**21101-858**
6	232	100	**21101-856**
6	232	10	**21101-855**

Desk-top enclosure – propacPRO

Rear panel, unshielded, for mounting on case frame

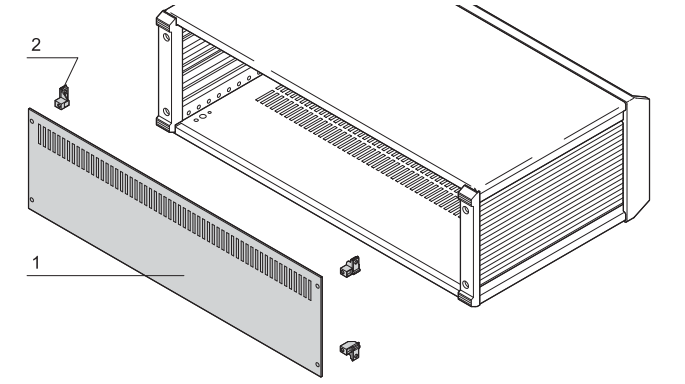

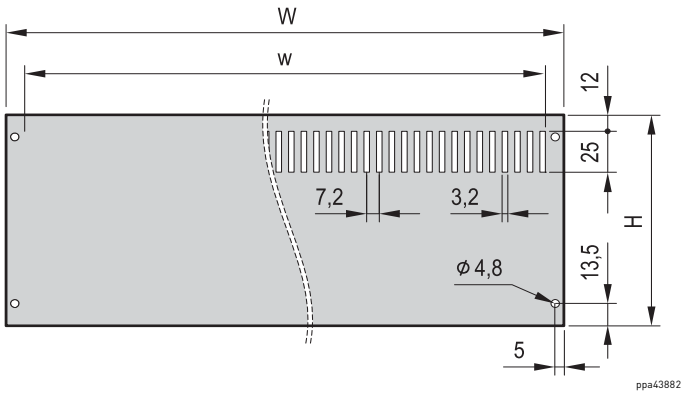

- Mounting with support brackets on case (right and left)
- Versions with and without perforation

Delivery comprises

Item	Qty	Description
1	1	Full-width rear panel, Al, anodised, cut edges blank 28, 42, 63 HP = 2 mm thickness 84 HP = 2.5 mm thickness
2	4	Support member, Zn die-cast
3	1	Assembly kit

Order Information

Height	H	Width W		w	With perforation	Without perforation
U	mm	HP	mm	mm	Part no.	Part no.
2	84	42	213	190	**24576-144**	**24576-044**
2	84	63	320	298	**24576-145**	**24576-045**
2	84	84	426	406	**24576-146**	24576-046
3	128.5	28	142	118	**24576-147**	**24576-047**
3	128.5	42	213	190	**24576-148**	**24576-048**
3	128.5	63	320	298	**24576-149**	**24576-049**
3	128.5	84	426	406	**24576-150**	**24576-050**
4	172.9	42	213	190	**24576-152**	**24576-052**
4	172.9	63	320	298	**24576-153**	**24576-053**
4	172.9	84	426	406	**24576-154**	**24576-054**
6	261.8	84	426	406	**24576-158**	24576-058

Rear panel, shielded, for mounting on case frame

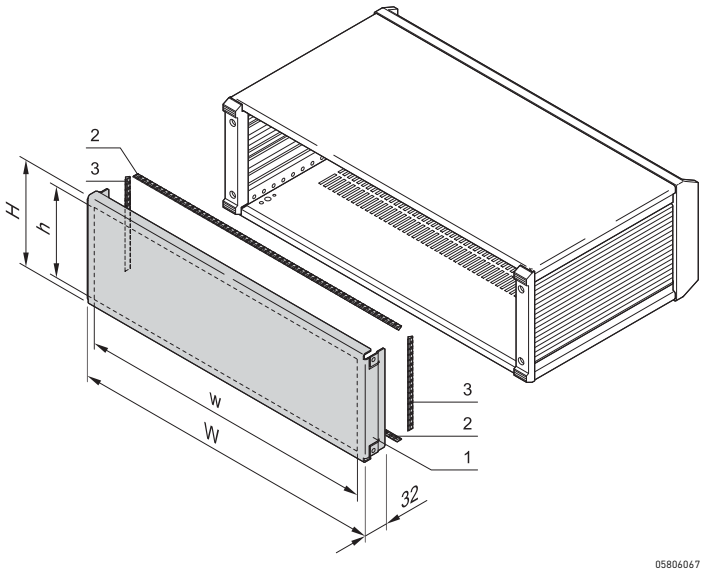

- Mounts on case (left, right)
- Without perforation

Delivery comprises

Item	Qty	Description
1	1	Full-width EMC rear panel, Al 1.5 mm, passivated, with GND/earthing connection (Faston 6.3 mm)
2	2	Textile EMC gasketing, for mounting top and bottom, core: foam, sleeve: textile cladding with CuNi coating
3	2	Textile EMC gasketing, for mounting left and right, core: foam, sleeve: textile cladding with CuNi coating
4	1	Assembly kit

Order Information

Height	H	Height h	Width W		w	Part no.
U	mm	mm	HP	mm	mm	
2	101.5	84	42	217.9	213	**24576-244**
2	101.5	84	63	324.6	319.7	**24576-245**
3	146	128.4	28	146.8	141.9	**24576-247**
3	146	128.4	42	217.9	213	**24576-248**
3	146	128.4	63	324.6	319.7	**24576-249**
3	146	128.4	84	431.3	426.4	**24576-250**
4	190.4	172.9	42	217.9	213	24576-252
4	190.4	172.9	63	324.6	319.7	**24576-253**
4	190.4	172.9	84	431.3	426.4	**24576-254**
6	279.3	261.8	84	431.3	426.4	**24576-258**

Desk-top enclosure – propacPRO

Front panel, hinged, shielded, for mounting on horizontal rails

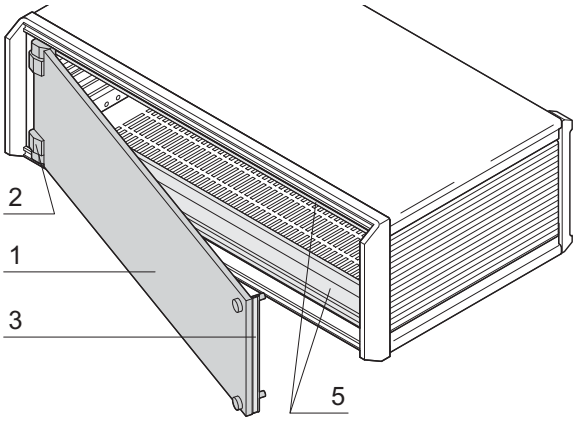

05806102

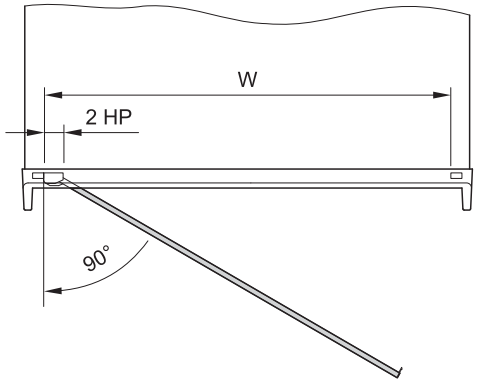

05806097

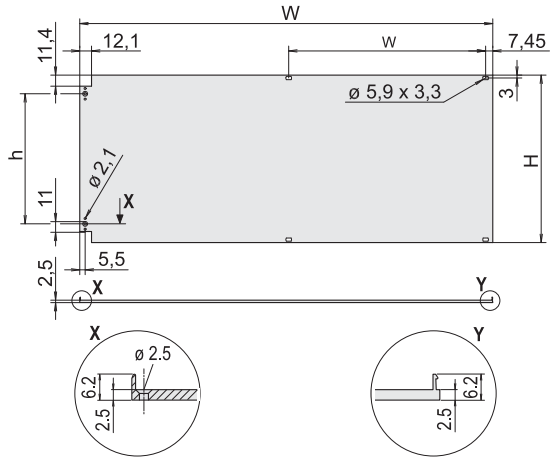

04602081

- Front panel with textile EMC gasketing
- Hinges can be fitted left or right
- Suitable for europacPRO subrack and ratiopacPRO, compacPRO and propacPRO cases

Delivery comprises (kit)

Item	Qty	Description
1	1	Front panel, hinged, Al, 2.5 mm, front anodised, rear iridescent green chromated
2	2	Hinge, Zn die-cast, chrome-plated
3	1	Textile EMC gasket core: foam, sleeve: textile cladding with CuNi coating
4	1	Assembly kit

Order Information

Height U	Width HP	H mm	h mm	W mm	w mm	Part no.
3	84	128.4	89.9	426.4	203.2	**20848-611**
6	84	261.8	223.2	426.4	203.2	**20848-617**
Item 5, Horizontal rail Type H-VT heavy duty, recessed mounting 84 HP, 1 piece (SPQ 10)						**34560-784**

Note

- Usable width reduced by 2 HP (hinged side)
- Horizontal rail (item 5) for front panel mounting is required, please order separately
- Lateral trim is necessary, please order separately, see page 5.59

EMC side panel gasket

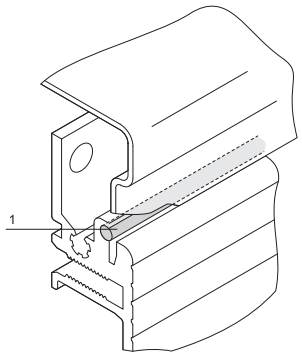

05806068

- For EMC shielding between side panel and top cover or base plate (sufficient for at least 1 case)

Order Information

Item	Description	Qty/PU	Part no.
1	Sealing cord, silicone, silver coated, Ø 2.4 mm, length 2.1 m	1	**30850-354**

Desk-top enclosure – propacPRO

Design elements

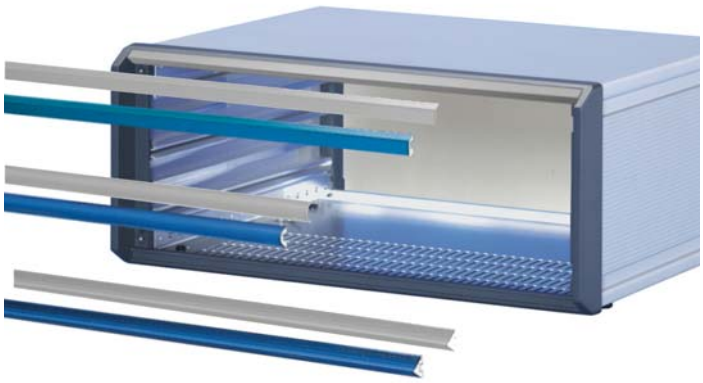

05809002

- To individualise case design

Delivery comprises

Qty	Description
1	Design element, Al extrusion, powder-coated
1	Assembly kit

Order Information

Description		Width	Light grey RAL 7035	Brilliant blue RAL 5007
		HP	Part no.	Part no.
Form 1	PPA43761	42	20850-184	20850-299
		63	20850-185	20850-300
		84	20850-186	20850-301
Form 2	PPA43762	42	20850-190	20850-315
		63	20850-191	20850-316
		84	20850-192	20850-317
Form 3	PPA43763	42	20850-196	20850-331
		63	20850-197	20850-332
		84	20850-198	20850-333

Note

- Size 28 HP and further colours available on request
- Cannot be combined with front hood

Desk-top enclosure – propacPRO

Trim, front, for EMC shielding

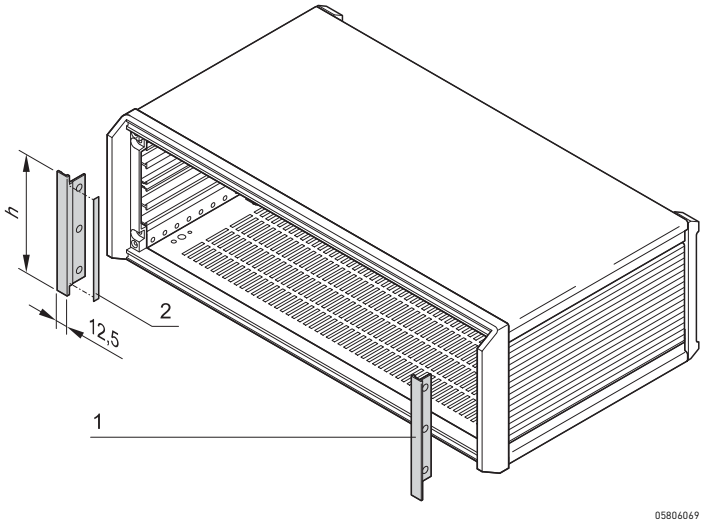

- For lateral covering of frame and for producing a continuous front with front panels and plug-in units
- Serves for lateral shielding of side panels simultaneously

Delivery comprises (kit)

Item	Qty	Description
1	2	Lateral trim, Al extrusion, visible surface painted RAL 7016
2	1	Textile EMC gasket
3	1	Assembly kit

Order Information

For case height	h	Part no.
U	mm	
2	84	**24576-017**
3	128.5	**24576-117**
4	172.9	**24576-217**
6	261.8	24576-417

Trim, rear, for EMC shielding

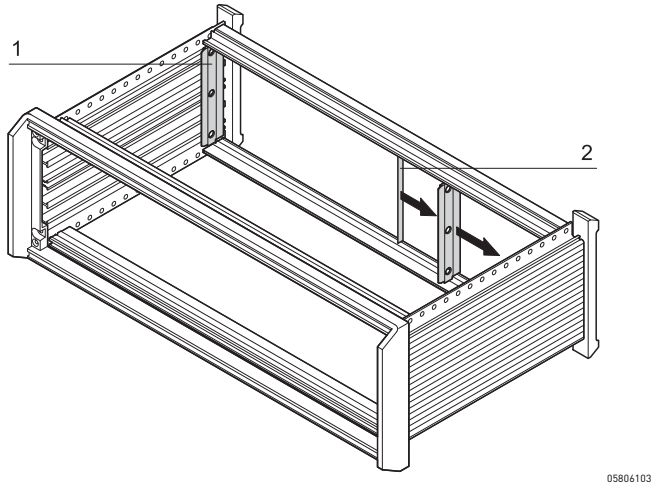

- For vertical EMC shielding between shielded front panels and side panel

Delivery comprises

Item	Qty	Description
1	2	EMC contact strip, Al extrusion
2	1	Textile EMC gasket
3	1	Assembly kit

Order Information

Height	Height	Part no.
U	mm	
2	65.55	**24576-018**
3	110	**24576-118**
4	154.45	**24576-218**
6	243.35	24576-418

Desk-top enclosure – propacPRO

Tip-up carrying handle

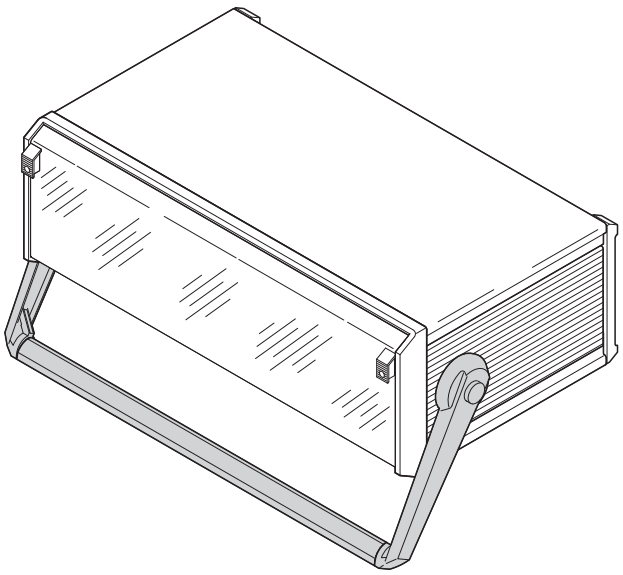

- With powder-coated carrying bar
- Can be locked in 30° increments
- Load-carrying capacity 20 kg

Delivery comprises (Kit)

Item	Qty	Description
1	1	Carrying bar, Al extrusion, powder-coated, RAL 7016
2	2	Handle side part, Zn, die-cast, powder-coated, length 180 mm
3	2	Safety insert, St, 1.5 mm, black
4	1	Assembly kit for side panel mounting

Order Information

For case width HP	Part no.
28	**24576-070**
42	**24576-071**
63	**24576-072**
84	**24576-073**

Note

- To fit the tip-up carrying handle, holes must be drilled in the side panel
- Readily prepared cases (3 U and 4 U), for mounting the tip-up carrying handle see page 5.52

Strap handle

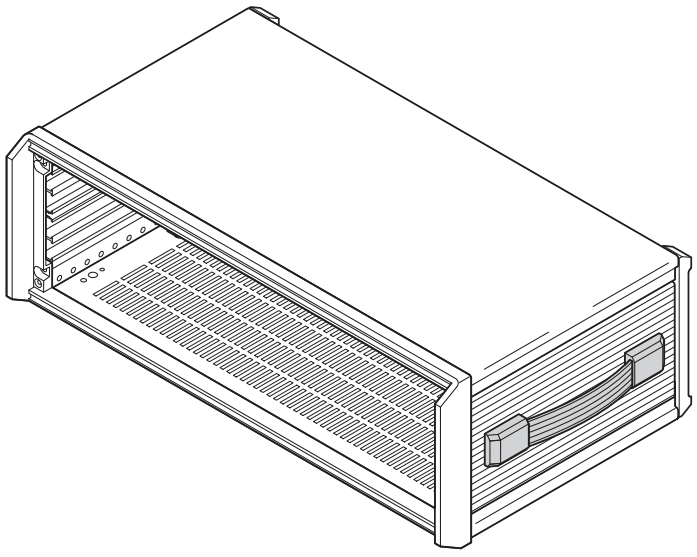

- Load-carrying capacity: 20 kg

Delivery comprises (Kit)

Item	Qty	Description
1	1	Band, spring steel, handle, flexible plastic, grey, RAL 7016
2	2	Cover, grey, RAL 7016
3	1	Assembly kit

Order Information

Description	Part no.
Strap handle with adaptor	**20850-249**

Note

- Holes must be drilled into the side panels to fix the strap handle
- Side panels with holes already drilled available on request
- Usable from case depth of D = 326 mm

Desk-top enclosure – propacPRO

Air filter

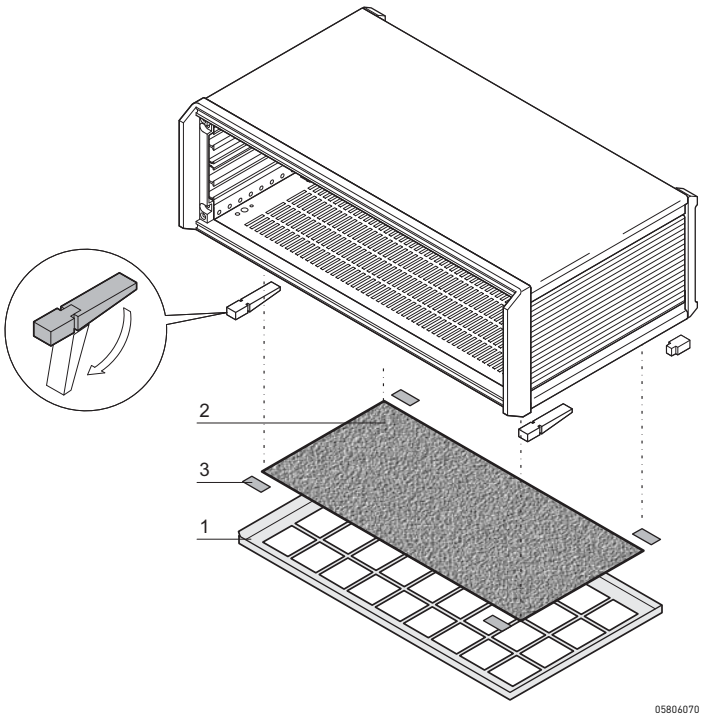

- Subsequent mounting possible without modification or tools
- Filter change without opening the case, IP protection code not affected

Delivery comprises (Kit)

Item	Qty	Description
1	1	Filter holder, Al, 1 mm, powder-coated, RAL 9006
2	1	Filter mat, synthetic fibre
3	1	Velcro

Order Information

For case width	Air filter	Replacement filter 1 piece
HP	Part no.	Part no.
28	**24576-093**	**64571-033**
42	**24576-094**	**64571-034**
63	**24576-095**	**64571-035**
84	**24576-096**	**64571-036**
Tip-up foot in plastic silver, similar to RAL 9006, 4 pieces		**20603-001**
Plastic tip-up foot anthracite, similar to RAL 7016, 4 pieces		**20603-002**

Note

- For optimum ventilation feet must be fixed to the case, please order separately

Front hood 3 U

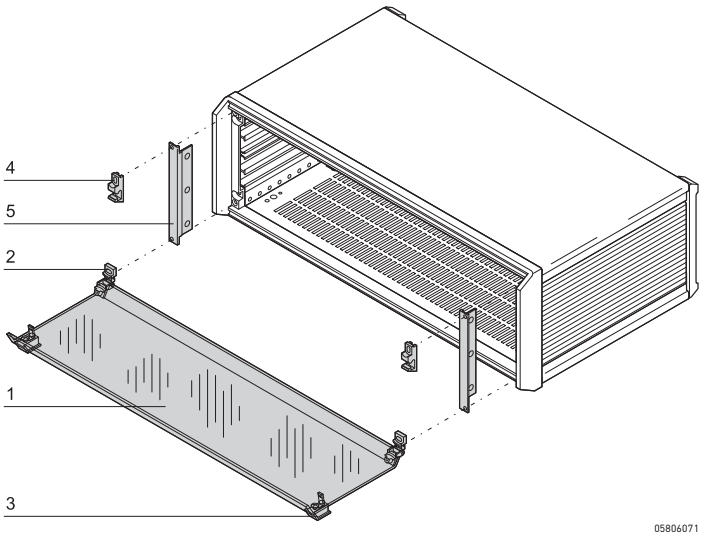

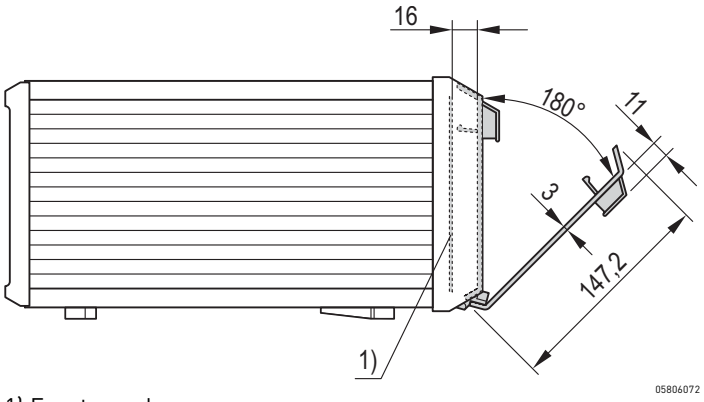

1) Front panel

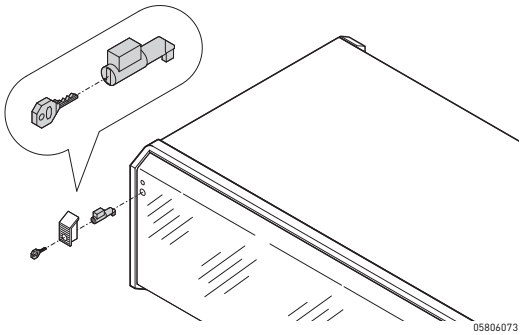

Lock for front hood

- From acrylic glass, hinged, removable
- Mounting of hinges at top or bottom
- Lock (max. 2) retrofittable
- Lateral cover (item 5) also serves as vertical EMC shielding of side panels

Delivery comprises (kit)

Item	Qty	Description
1	1	Hood, PMMA, tinted blue grey, acrylic glass, 3 mm
2	2	Hinge, PC, UL 94 V-0, RAL 7016
3	2	Handle, PC, UL 94 V-0, RAL 7016
4	2	Retainer, UL 94 V-0, PC, RAL 7016
5	2	Lateral trim, Al extrusion, visible surface painted RAL 7016
6	1	Assembly kit

Order Information

For case width HP	Part no.
28	**24576-080**
42	**24576-081**
63	**24576-082**
84	**24576-083**
Lock for front hood Locking cylinder, key, assembly kit, PU 1 kit	**60850-171**
Plastic tip-up foot silver, similar to RAL 9006, 4 pieces	**20603-001**
Plastic tip-up foot anthracite, similar to RAL 7016, 4 pieces	**20603-002**

Note

- Cannot be combined with design elements
- Other heights available on request
- Before assembly of hood feet must be fixed to case; please order separately

Desk-top enclosure – propacPRO

Foot for rear hood

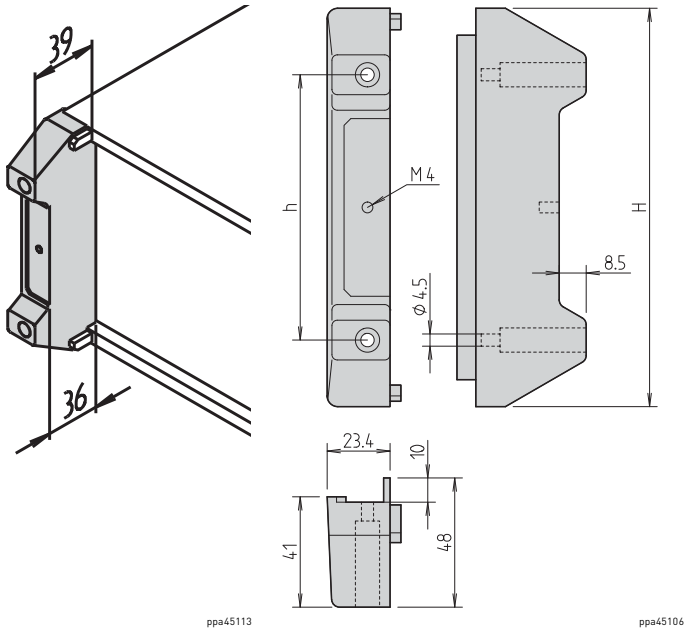

- Increases the distance between rear panel and parking surface (when used vertically)
- Simplifies cable routing
- Increased shock and vibration damping
- Required for mounting rear hood

Delivery comprises

Item	Qty	Description
1	2	Foot, PU foam
1	1	Assembly kit

Order Information

For cabinet height U	Height H mm	Part no.
3	147.9	**24576-393**
4	192.3	**24576-394**

Rear hood

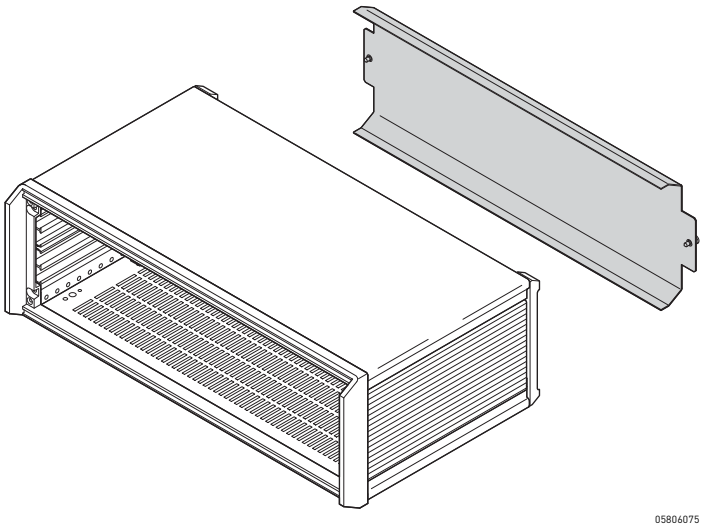

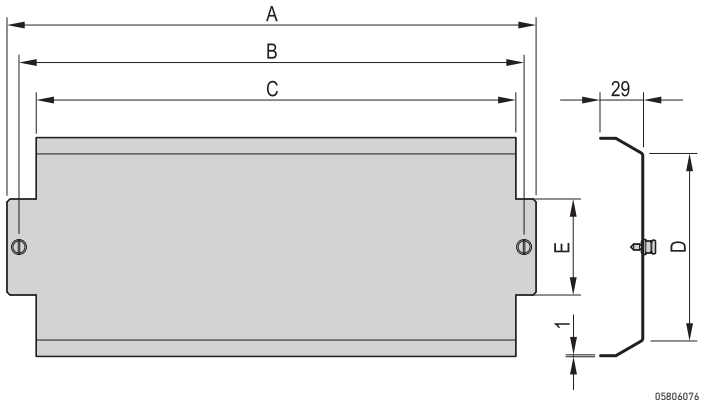

Delivery comprises (kit)

Item	Qty	Description
1	1	Hood, Al, 1 mm, RAL 9006, fixing with knurled screws
2	1	Assembly kit

Order Information

Height U	Width HP	A mm	B mm	C mm	D mm	E mm	Part no.
3	42	246	230	213	145.9	64	**24576-086**
3	63	352.7	336.7	319.7	145.9	64	**24576-087**
3	84	459.4	443.4	426.4	145.9	64	**24576-088**
4	63	352.7	336.7	319.7	190.4	108.5	**24576-091**
4	84	459.4	443.4	426.4	190.4	108.5	**24576-092**
Foot for rear hood for case height 3 U, PU foam, black, PU 2 pieces							**24576-393**
Foot for rear hood for case height 4 U, PU foam, black, PU 2 pieces							**24576-394**

Note

- To fit the rear hood, feet must be fitted to the rear panel; please order separately

Desk-top enclosure – propacPRO

Mounting plates

Order Information

Mounting plate for fixing of heavy components

Mounting plate over **full width**:
mounting is onto the side panels
Mounting plate over **partial width**:
mounting is onto one side panel and a fixing strip or onto 2 fixing strips

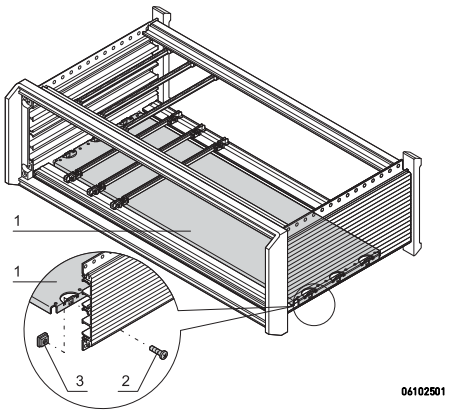

Al, 1.5 mm; for mounting over partial width, please order fixing strips separately

Fixing strip for partial widths

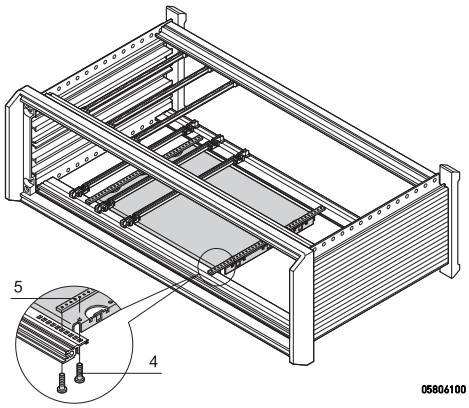

St, 2 mm, zinc-plated;
is bolted from front to rear onto the horizontal rails;
to fix mounting plates

Width W HP	W mm	Board lengths mm	1 piece	1 piece
42	217.99	160	**34562-746**	**30840-021**
42	217.99	220	**34562-750**	**30840-033**
63	324.67	160	**34562-747**	**30840-021**
63	324.67	220	**34562-751**	**30840-033**
84	431.35	160	**34562-748**	**30840-021**
84	431.35	220	**34562-752**	**30840-033**
84	431.35	340	**34562-760**	**30840-057**
Assembly kit for mounting plate, PU 1 kit (Torx countersunk screw M4 x 5, St, zinc-plated, 12 pieces; screw M4 x 6, St, zinc-plated, 10 pieces; M4 square nut, St, zinc-plated, 10 pieces)			**24560-184**	–
Assembly kit for fixing strips for partial width mounting plates, Torx screw M2.5 × 5, St, zinc-plated, PU 100 pieces M2.5 × 5, St, zinc-plated, PU 100 pieces			–	**24560-146**

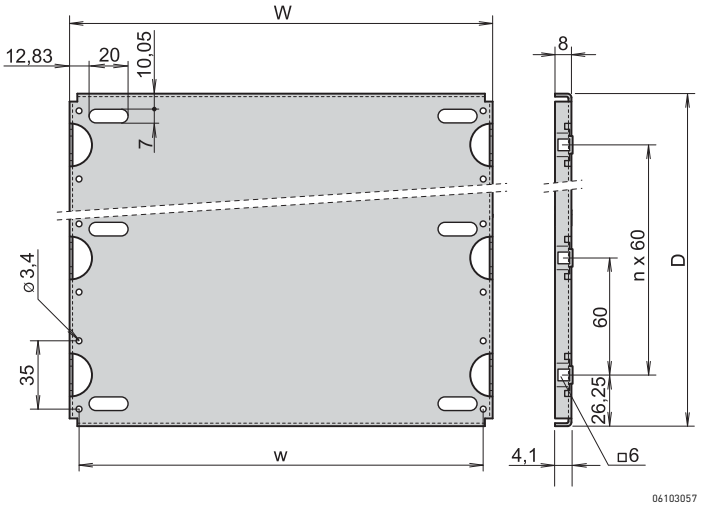

Note

- Please order assembly kit for mounting plate separately
- Fixing strips required for partial width, please order separately
- Other versions on request
- Dimensions side panel with horizontal rail see page 5.53

propacPRO:
D = board length - 47.5 mm; n = 1 for 160 mm board length;
n = 2 for 220 mm board length; n=4 for 340 mm board length

Desk-top enclosure – propacPRO

EMC gasket, stainless steel, between front/rear panel and horizontal rail

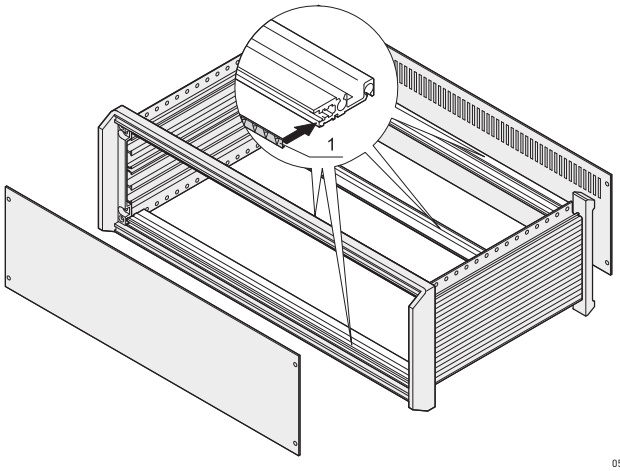

05806109

- The EMC contact strip is clipped onto the horizontal rail and forms a conductive link to front or rear panel
- Can be used for front/rear horizontal rails type VT (recessed)

Delivery comprises

Item	Qty	Description
1	10/100	EMC gasket, St, stainless

Order Information

Width HP	Length mm	Qty/PU pieces	Part no.
28	131.78	10	**24560-229**
42	202.9	10	**24560-231**
63	304.5	10	**24560-233**
84	416.56	10	**24560-235**
84	416.56	100	**24560-236**

GND/earthing kit

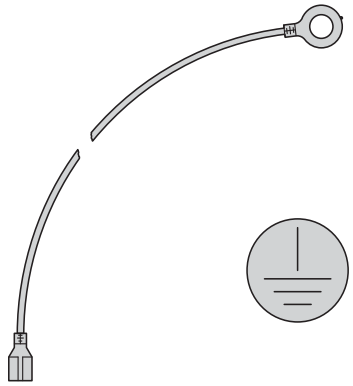

aza43284

- Protective GND/earthing connections in accordance with:
  - DIN EN 50178/VDE 0160
  - DIN EN 60950/VDE 0805
  - DIN EN 61010-1/VDE 0411 part 1
  - DIN EN 61010-1A2/VDE 0411 part 1A1
- VDE tested

Order Information

Description	Part no.
GND/earthing kit, Cu wire 1.5 mm^2, PVC sleeve, green/yellow, links side panels, base and rear panel, 1 piece	**21102-001**

Cable holder

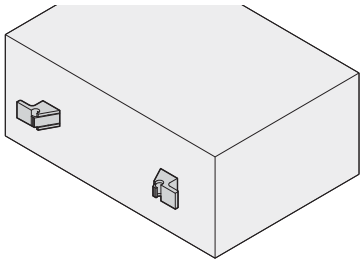

02908053

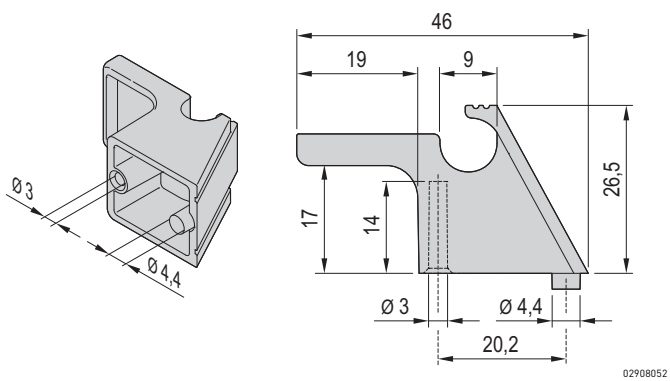

02908052

Delivery comprises

Item	Qty	Description
1	2	Cable holder, ABS, UL V-94 0, RAL 7016, detent for cables between 8 mm and 12 mm
2	1	Drilling template, two drill holes each per holder are needed in rear panel
3	1	Assembly kit

Order Information

Description	Part no.
Cable holder	**24575-800**

Desk-top enclosure – propacPRO

Mounting position horizontal/central rails

2 U

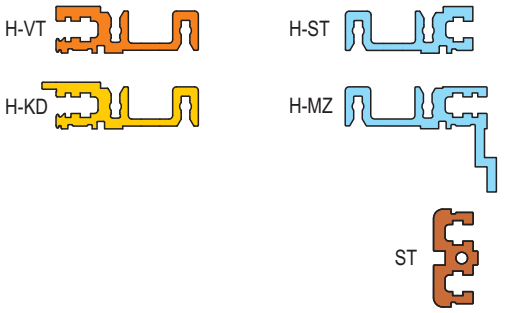

3 U

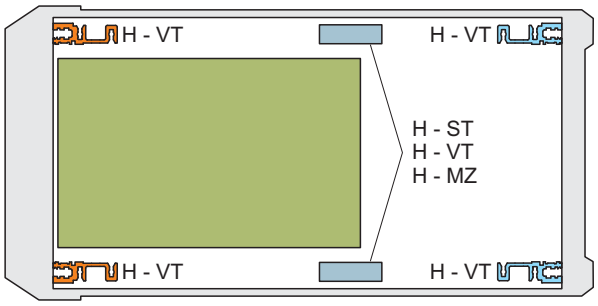

4 U (3 + 1)

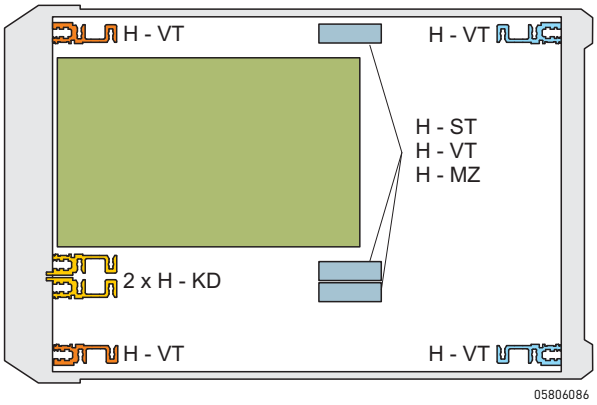

"Z" (EMC shielding with 2 horizontal rails)

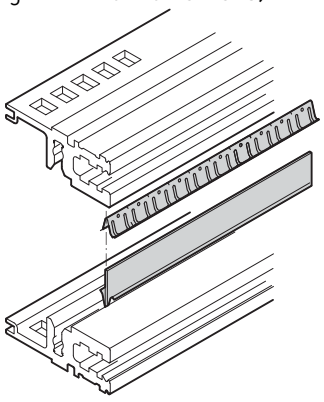

6 U

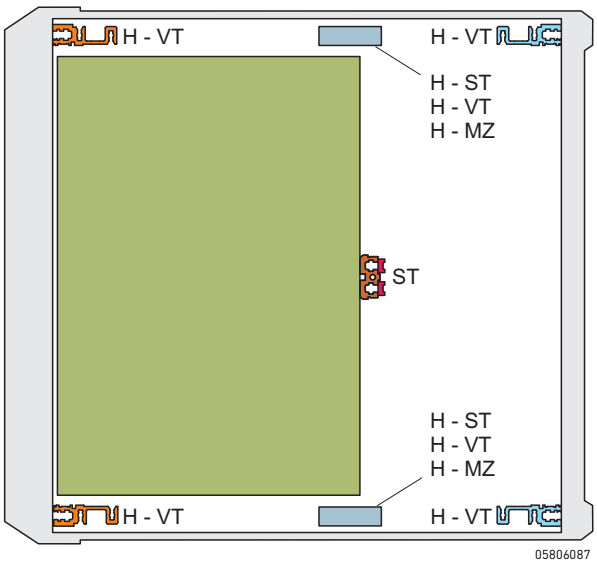

6 U (2 x 3)

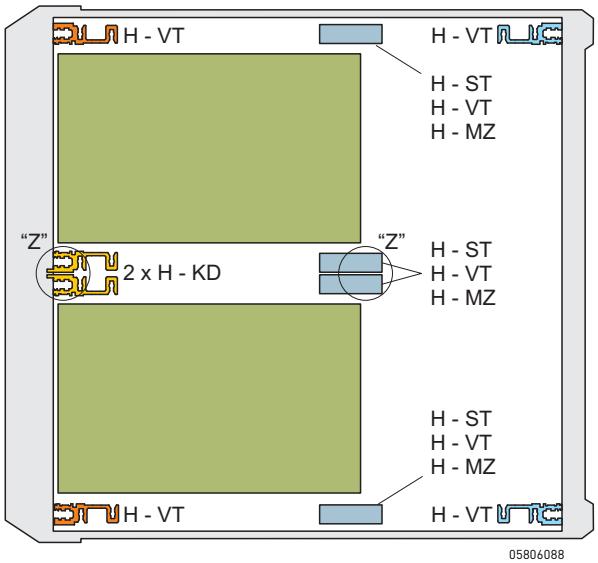

Desk-top enclosure – propacPRO

Horizontal rails to front/centre/rear

Order Information

		For indiect backplane fixing with insulation strip	For direct backplane fixing	For direct fixing of connectors in accordance with EN 60603-2 (DIN 41612)	Front horizontal rails	Stainless steel EMC gasket between horizontal rail and horizontal rail	Horizontal rail type H-VT robust, with EMC gasket
		04400001	04400002	04400003		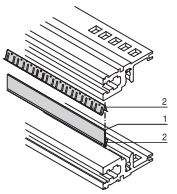 bza45877	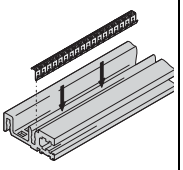 06106052
		"heavy" Type H-ST standard	"heavy" Type H-VT long lip	"heavy" Type H-MZ with Z-rail	"heavy" Type H-KD short lip		
		06197011	06197013	06197015	06197008		
		Al extrusion, anodised finish, conductive surface, with printed HP markings	Al extrusion, anodised finish, conductive surface, with printed HP markings	Al extrusion, anodised finish, conductive surface, with printed HP markings	Al extrusion, anodised finish, conductive surface, with printed HP markings	item 1: metal strip, Al, 1 mm, item 2: EMC stainless steel gasket; for shielding of 2 horizontal rails positioned directly one above the other if assembly area is divided vertically	horizontal rail: Al extrusion, anodised, conductive contact surface for cover plates on shielded cases
Usable length HP	Length mm	1 piece (SPQ 10)[1]	1 piece (SPQ 10)[1]	1 piece (SPQ 10)[1]	1 piece (SPQ 10)[1]	PU 1 kit	1 piece
28	147.32	**34560-528**	**34560-728**	**34560-928**	**34560-228**	**24562-528**	**24576-028**
42	218.44	**34560-542**	**34560-742**	**34560-942**	**34560-242**	**24562-542**	**24576-042**
63	325.12	**34560-563**	**34560-763**	**34560-963**	**34560-263**	**24562-563**	**24576-063**
84	431.80	**34560-584**	**34560-784**	**34560-984**	**34560-284**	**24562-584**	**24576-084**
Torx panhead screw , M4 × 14, St, zinc-plated, PU 100 pieces		**24571-371**	**24571-371**	**24571-371**	**24571-371**	–	**24571-371**
Torx panhead screw , M 4 × 10, St, zinc-plated, necessary if guide rail is screwed to slot 1, PU 100 pieces		–	–	**24571-372**	**24571-372**	–	**24571-372**
Perforated rail for connector mounting with insulation strip see page		5.69	–	–	–	–	–
Z-rail for connector mounting without insulation strip see page		5.69	–	–	–	–	–
Insulation strips see page		–	5.68	–	–	–	–
Threaded inserts see page		5.68	5.68	5.68	5.68		

1) SPQ (standard pack quantity): Order number includes 1 piece, but delivery is exclusively made in standard pack quantity (SPQ); please order at least the SPQ quantity or a multiple thereof

Note

- Further horizontal rails see from page 6.27
- Fitting options see page 5.66

Desk-top enclosure – propacPRO

Horizontal rails, centre, type ST-C

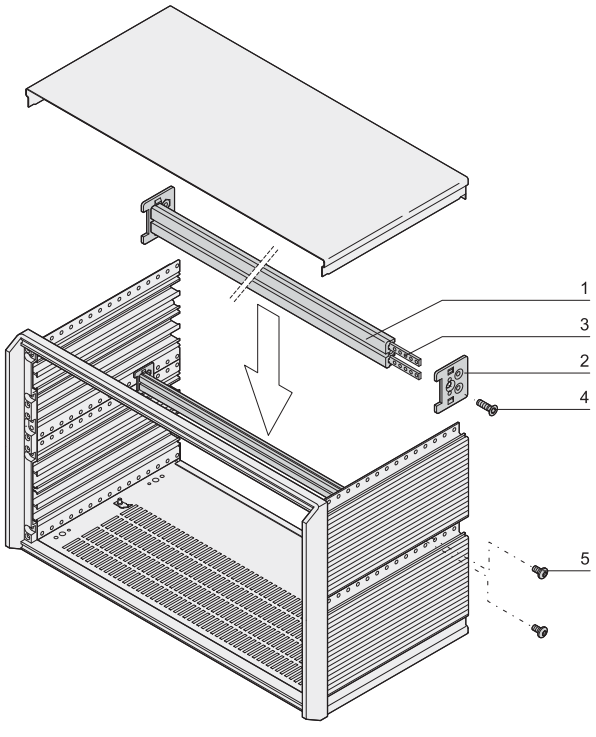

- For indirect backplane mounting (with insulation strip)
- For 6 U propacPRO case

Delivery comprises (kit, item 1 to 4 are pre-mounted)

Item	Qty	Description
1	1	Horizontal rail, Al extrusion, anodised, contact surfaces conductive
2	2	Adaptor plate, Al
3	2	Threaded insert, M2.5, St, zinc-plated
4	2	Countersunk screw, M4 x 14
5	4	Pan head screw, M4 x 6

Order Information

Usable width HP	Length mm	Part no.
84	431.8	**24575-474**
Insulation strip 84 HP, PBT UL 94 V-0, grey, PU 10 pieces		**24560-884**

Threaded inserts, perforated strips, insulation strips

Order Information

Threaded insert

M2.5 M3

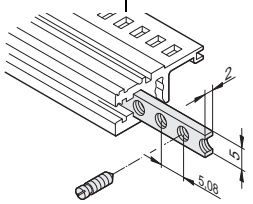

required for fixing the front panel to the horizontal rail; St, zinc-plated; use collar screw 12.3 mm, see page 6.64

Perforated strip (item 1)

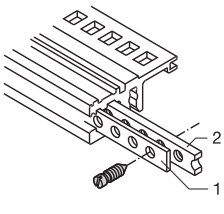

for centring shielded plug-in units, Al, 1 mm, please order grub screw separately

Insulation strip

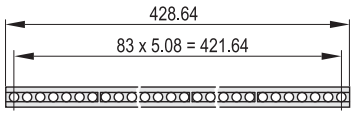

for insulated backplane mounting; PBT UL 94 V-0, grey

Usable length HP	Threaded insert Length mm	1 piece (SPQ 10)[1]	1 piece (SPQ 10)[1]	Perforated strip Length mm	1 piece (SPQ 10)[1]	Insulation strip Length mm	PU 10 pieces
28	146.82	**34561-328**	–	147.12	**30845-197**	144.20	**24560-828**
42	217.94	**34561-342**	–	218.24	**30845-211**	210.40	**24560-842**
63	324.62	**34561-363**	–	324.92	**30845-232**	316.88	**24560-863**
84	431.30	**34561-384**	**34561-484**	431.60	**30845-253**	428.64	**24560-884**
Accessories							
Grub screw M2.5 x 8, PU 100 pieces		**21100-276**	–		–		–
Grub screw M2.5 x 9, PU 100 pieces		–	–		**21101-359**		–
Grub screw M3 x 8, PU 100 pieces		–	**21100-646**		–		–

1) SPQ (standard pack quantity): Order number includes 1 piece, but delivery is exclusively made in standard pack quantity (SPQ); please order at least the SPQ quantity or a multiple thereof

2) Part no. includes one packing unit (PU); delivery is exclusively made in PU

Desk-top enclosure – propacPRO

Z-rails, perforated rails

Order Information

		Z-rail for connectors		Perforated rail
		DIN EN 60603-2, DIN 41612 item 1	31-pin, DIN 41617	EN 606032, DIN 41612 item 1
		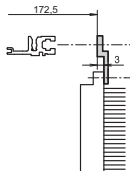 BZA45849 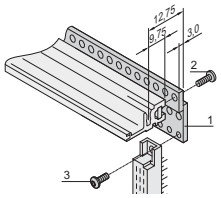 06708063	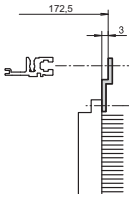 BZA45850	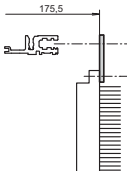 BZA45848 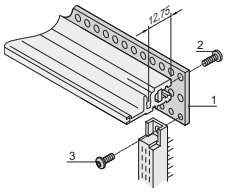 06708051
		for connector mounting on ST horizontal rails, please order threaded insert and screw separately	for connector mounting on ST horizontal rails, please order threaded insert and screw separately	for connector mounting on VT horizontal rails, please order threaded insert and screw separately
Usable length HP	**Length mm**	**1 piece**	**1 piece**	**PU 4 pieces**
28	142.24	**30822-033**	–	**20822-049**
42	213.36	**30822-047**	–	**20822-050**
60	304.80	**30822-065**	**30819-783**	**20822-047**
84	426.70	**30822-089**	**30819-808**	**20822-048**
Item 3, Torx panhead screw to fix connector to perforated rail,, M2.5 × 7, PU 100 pieces		**24560-147**	**24560-147**	**24560-147**
Item 2, Torx panhead screw, to fix perforated rail to horizontal rail, M2.5 × 10, PU 100 pieces		**24560-148**	**24560-148**	**24560-148**

Desk-top enclosure – propacPRO

Combined mounting (6 U and 2 x 3 U one above the other)

Order Information

	Combined mounting			
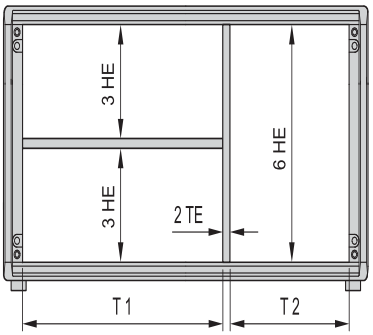 05806108	Horizontal and vertical subdivision (incl. front panel for stainless steel EMC gasket)	Unshielded front panel, 6 U, 2 HP item 5	Front panel for textile EMC gasket, 6 U, 2 HP item 5	Splitting extrusion for combined mounting item 2
	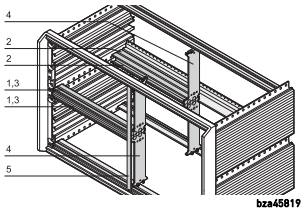 bza45819	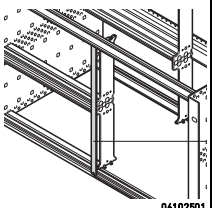 06102501	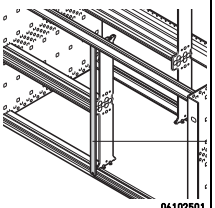 06102501	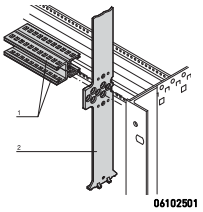 06102501
	item 1: 2 front horizontal rails (H-KD), Al extrusion, anodised; item 2: 2 rear horizontal rails (AB), Al extrusion, anodised; item 3: threaded insert, St, zinc-plated; item 4: Zn die-cast support member; item 5: front panel 2 HP, 6 U, shielded; with EMC stainless steel gasket; 84:0 without items 4, 5	Al, 2.5 mm, front anodised, rear iridescent green chromated	Al, 2.5 mm, U-profile with notch, 6 U, 2 HP	6 U, Zn die-cast; splitting extrusion is inserted in the grid holes of the horizontal rail; the splitting extrusion can be bolted
Width pitch T1:T2 HP	**PU 1 kit**	**1 (SPQ 5)**	**1 piece (SPQ 5)[1)]**	**1 piece**
20:62	**24562-420**	**30847-472**	**30849-140**	**64560-010**
40:42	**24562-440**			
42:40	**24562-442**			
63:19	**24562-463**			
84:0	**24562-484**			
Torx countersunk screw M4 × 14, zinc-plated, PU 100 pieces for fixing splitting extrusion/horizontal rail	–	–	–	**24560-145**
Panhead screw M2.5 × 10, St, zinc-plated, PU 100 pieces for fixing horizontal rail/splitting extrusion	–	–	–	**24560-179**
Pozidrive/slotted collar screw M2.5 x 12.3, St, nickel-plated, PU 100 pieces	–	**21101-101**	**21101-101**	–
Pozidrive/slotted collar screw M2.5, black, zinc-plated, PU 100 pieces	–	**21101-102**	**21101-102**	–
Washer 2.7 x 5 x 1, plastic PA 6, PU 100 pieces	–	**21101-121**	**21101-121**	–
Textile gasket, core: foam, sleeve: textile cladding with CuNi coating, UL 94 V-0, PU 10 pieces	–	–	**21101-855**	–

- Subdivision of the 6 U assembly area into:
  - 2 x 3 U
  - 1 x 6 U
- Designed to accept euroboards (100 mm high) and double euroboards (233.35 mm high)

Note

- Please order EMC gasketing kit for horizontal rails separately, see page 6.54
- Please order perforated strips for horizontal rails separately, see page 5.68
- Please order rear centre horizontal rail separately, see page 5.68

Desk-top enclosure – propacPRO

Horizontal board mounting

Order Information

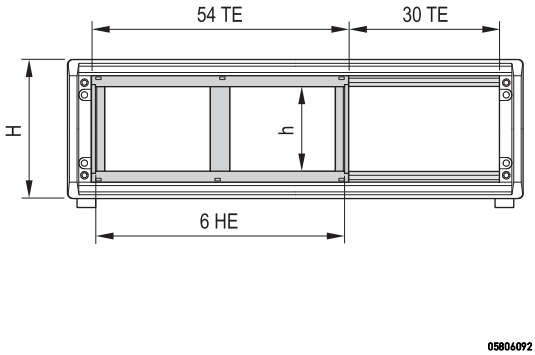

(1 TE = 1 HP, 1 HE = 1 U)

Height H U	Usable height h HP	Other dimensions and options Horizontal rail, front	Horizontal rail, rear	Horizontal board mounting: Board cage	Front frame for EMC gasketing	Front frame, unshielded
				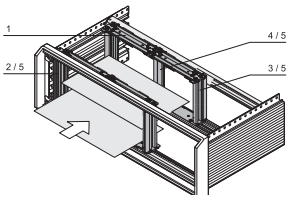 05806091	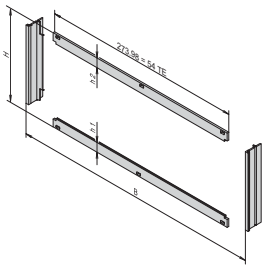 bpa45913	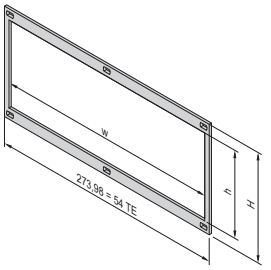 bza43061
				Struts die-cast zinc; horizontal rails front and rear; threaded insert, St, zinc-plated; fixing material kit; for horizontal mounting of double-height euroboards in 3 or 4 U high subracks/cases; 54 HP space required; **please order front frame for EMC gasketing separately**	2 horizontal trims, Al 2.5 mm, front anodised, rear iridescent green chromated; 2 vertical trims, Al extrusion, clear passivated; stainless steel EMC gasket; front frame forms the contact between subrack and the sub-assemblies	Al, 2.5 mm, clear anodised; front frame with cut-out, clear internal width w = 266.35 mm
				PU 1 kit	**PU 1 kit**	**1 piece**
3	20			**24564-117**	**24564-109**	34564-108
3	20			**24564-118**	**24564-109**	34564-109
4	28			**24564-217**	**24564-209**	**34564-208**
Assembly tool, for mounting the EMC gasket (stainless steel)			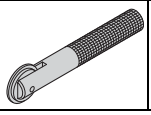	–	**24560-270**	–

* For direct backplane mounting

Plastic tip-up feet

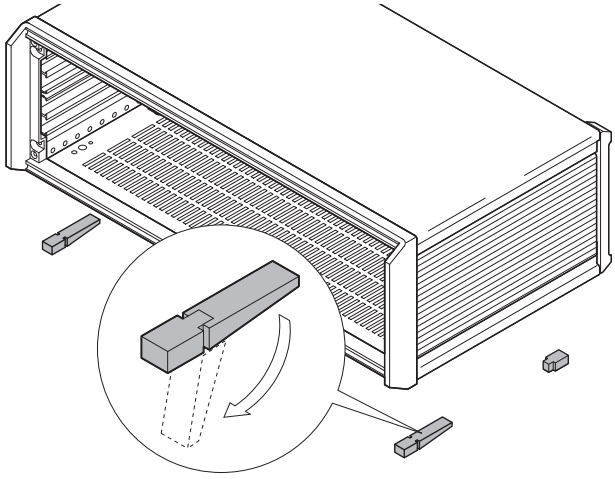

05806093

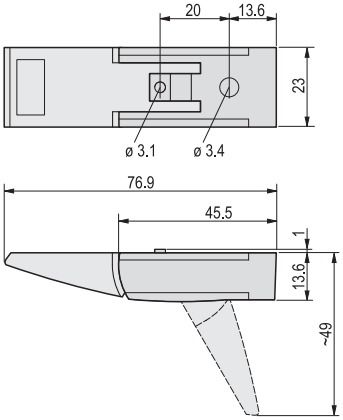

02906050

- Static load-carrying capacity 25 kg per foot
- Tip-up feet can be used instead of the pre-mounted case feet
- Fixing holes provided in bottom of case

Delivery comprises (kit)

Item	Qty	Description
1	4	Foot, PA, UL 94 V-0
2	4	Anti-slip protection, TPE
3	2	Tip-up device, PA, UL 94 V-0
4	1	Assembly kit

Order Information

Description		Part no.
Plastic tip-up foot	anthracite, similar to RAL 7016, 4 pieces	20603-002
Plastic tip-up foot	silver, similar to RAL 9006, 4 pieces	20603-001
Cheesehead screw with slot M4 × 12, St, zinc-plated, PU 100 pieces		21101-211
Hexagon nut M4, St, zinc-plated, PU 100 pieces		21100-211
Spring washer A4, St, zinc-plated, PU 100 pieces		21100-207

Tip-up feet made of die-cast aluminium

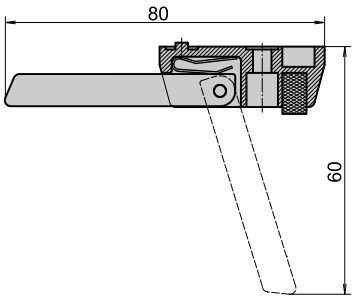

AZA43836

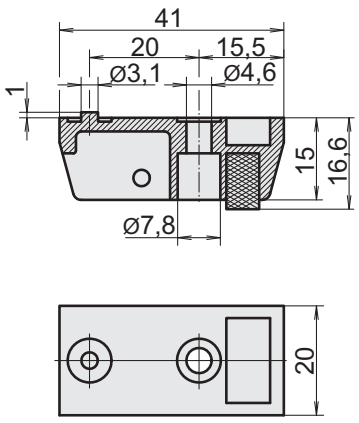

02908051

- Can be used instead of the round standard feet
- Fixing holes provided in bottom of case
- Secure case stance with slip-proof rubber inserts
- Load carrying capacity: 50 kg per foot, max. case weight 40 kg

Order Information

Description	Qty	Part no.
Foot with tip-up, Al die-cast, silver	1 piece (SPQ 10)[1)]	10603-002
Foot without tip-up, Al die-cast, silver	1 piece (SPQ 10)[1)]	10603-001
Cheesehead screw with slot M4 × 12, St, zinc-plated, PU 100 pieces		21101-211
Hexagon nut M4, St, zinc-plated, PU 100 pieces		21100-211
Spring washer A4, St, zinc-plated, PU 100 pieces		21100-207

1) Part no. comprises 1 piece;
delivery is in standard pack quantity (SPQ):
please order a minimum of 10 feet or a multiple

Note

- Delivery is in standard pack multiples; pricing is per individual item

Desk-top enclosure – propacPRO

Guide rails for plug-in units and frame type plug-in units, one-piece, groove width 2 mm

Order Information

Assembly
- can be clipped into Al extruded horizontal rails
- can be clipped into 1.5 mm thick plates

Storage temperature
from -40 °C ... 130 °C

Board lengths mm	Groove width mm	Colour mm	For plug-in units and frame type plug-in units: Standard 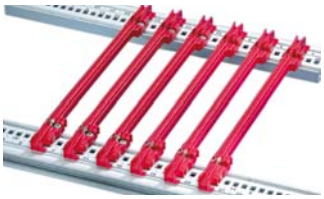 06102001 up to 220 mm length, PBT, UL 94 V-0; multi-piece from 280 mm length, end piece PBT, UL 94 V-0, central section Al extrusion PU 10 pieces	For plug-in units and frame type plug-in units: With DIN connector fixing as standard 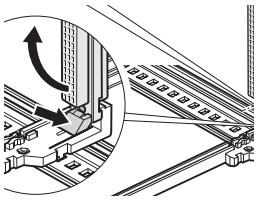 06101501 PBT, UL 94 V-0, red, connector is clipped directly onto the guide rails; for euroboards, 100 x 160 mm or 100 x 220 mm only 1 pair (SPQ 10)[1)]
70	2	red	–	–
70	2	grey	–	–
160	2	red	**24560-351**	**64560-074**
220	2	red	**24560-353**	**64560-075**
280	2	red	**24560-379**	–
340	2	red	**24560-380**	–
Dimension drawings see page			6.40	6.40

Accessories

Retention screw, PU 100 pieces 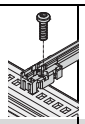	**24560-141**	**24560-141**
ESD clip, PU 50 pieces description see page 6.41	**24560-255**	**24560-255**

1) SPQ (standard pack quantity): Order number includes 1 piece, but delivery is exclusively made in standard pack quantity (SPQ); please order at least the SPQ quantity or a multiple thereof

2) Part no. includes one packing unit (PU); delivery is exclusively made in PU

Further guide rails see page 6.35

Desk-top enclosure – propacPRO

Guide rails type "accessories", one-piece, groove width 2 mm and 2.5 mm

Order Information

Assembly - can be clipped into horizontal rails in Al extrusion - can be clipped into 1.5 mm thick plates **storage temperature** from -40 °C ... +130 °C			**Guide rails** **"Accessories"** 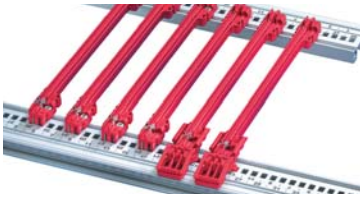 06102002 up to 280 mm length, PBT, UL 94 V-0; multi-piece from 280 mm length, end piece PBT, UL 94V-0, middle section Al extrusion	**Guide rails** **"Accessories" strengthened** 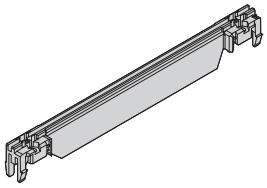 06102005 PBT UL 94 V-0, red support beam of guide rails adds to strengthening	**Guide rails** **for heavy modules,** **Al extrusion, silver,** **robust version** 06102005 Al extrusion; is screwed to horizontal rail "heavy" with retention screws
Board lengths **mm**	**Groove width** **mm**	**Colour** **mm**	**PU 10 pieces**	**1 piece (SPQ 50)**	**1 piece (SPQ 50)[1)]**
100	2	red	–	–	–
160	2	red	**24560-373**	**64560-076**	–
160	2	grey	–	–	**34562-881**
220	2	red	**24560-374**	**64560-078**	–
220	2	grey	–	–	**34562-882**
280	2	red/ silver	**24560-375**	**64560-080**	**34562-883**
340	2	red/ silver	**24560-376**	–	**34562-884**
400	2	silver		–	**34562-885**
160	2.5	silver	–	–	**34564-881**
220	2.5	silver	–	–	**34564-882**
280	2.5	silver	–	–	**34564-883**
340	2.5	silver	–	–	**34564-884**
400	2.5	silver	–	–	**34564-885**
Dimension drawings see page			6.40	6.40	6.40

Accessories

Retention screw, PU 100 pieces 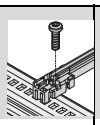	**24560-141**	**24560-141**	**24560-157**
ESD clip, PU 50 pieces description see page 6.41	**24560-255**	**24560-255**	–
Board locking C, red, PU 10 pieces, description see page 6.41	**24560-377**	**24560-377**	–
Board handle C, red, PU 10 pieces, description see page 6.41	**24560-378**	**24560-378**	–
Identification strips for board handle, red, PU 1 sheet = 438 pieces, description see page 6.41	**60817-228**	**60817-228**	–
Coding see page	6.41	6.41	–

1) SPQ (standard pack quantity): Order number includes 1 piece, but delivery is exclusively made in standard pack quantity (SPQ); please order at least the SPQ quantity or a multiple thereof

2) Part no. includes one packing unit (PU); delivery is exclusively made in PU

Further guide rails see page 6.35

Desk-top enclosure – propacPRO

Divider plate

Order Information

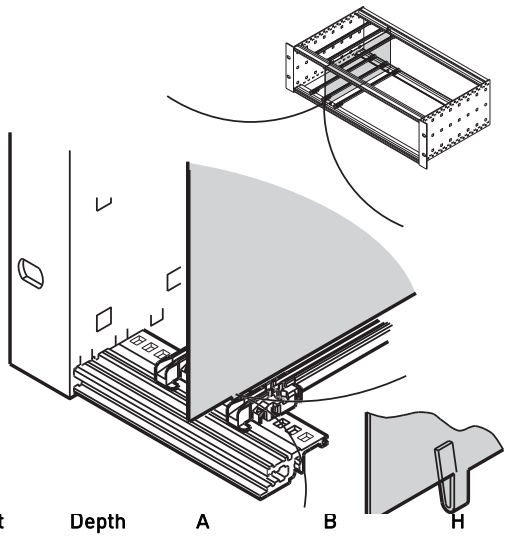

Height	Depth	A	B	H	Divider plate
U	mm	mm	mm	mm	PU 10 pieces
3	160	158.3	135.0	113.5	**34562-761**
3	220	218.3	195.0	113.5	**34562-762**
6	160	158.3	135.0	246.9	**34562-763**
6	220	218.3	195.0	246.9	**34562-764**

Mounting position when stainless steel EMC gasket is used

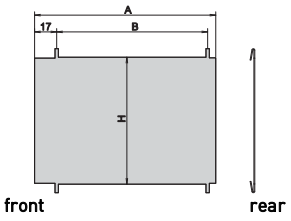

Mounting position when textile EMC gasket is used

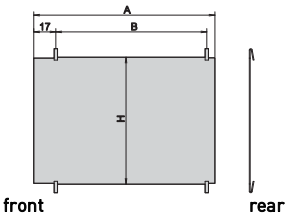

Stainless steel, 1 mm, is mounted by clipping onto horizontal rail,
space requirement on component side 2 mm;
mounting direction varies with shielding design (EMC stainless steel or textile gasket);
retrofitting the divider plate in an already-assembled subrack/case
will first require dismantling of the horizontal rails;
where front panels are unshielded, both mounting directions are possible

Air baffle for slots

Order Information

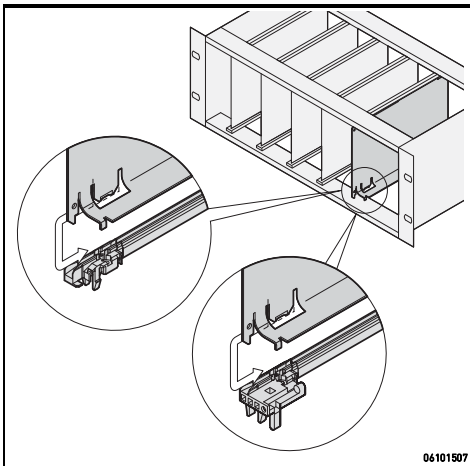

Depth	Width	Height	Air baffle without front panel	Air baffle with front panel U front panel for textile EMC gasket
mm	HP	U	1 piece	1 piece
160	4	3	**34562-823**	**20848-728**
160	4	6	**34562-826**	**20848-736**
160	8	3	**34562-833**	20848-730
160	8	6	**34562-836**	20848-738
160	12	3	**34562-843**	20848-732
160	12	6	**34562-846**	20848-740
220	4	3	**34562-824**	20848-729
220	4	6	34562-827	20848-737
220	8	3	34562-834	20848-731
220	8	6	34562-837	20848-739
220	12	3	34562-844	20848-733
220	12	6	34562-847	20848-741

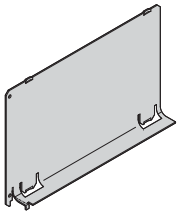

Al, 1 mm, incl. assembly kit;
prevents an air short circuit in unoccupied slot positions;
is pushed into the groove of the guide rails

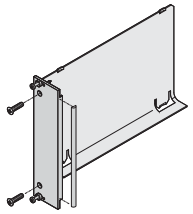

Air deflector, Al, 1 mm,
front panel, Al extrusion, 2.5 mm,
front anodised, rear conductive;
EMC textile gasket, fixing materials kit prevents an air
short-circuit where slots are unoccupied;
is pushed into the groove of the guide rails

Content

Desk-top cases – compacPRO

Cabinets 1
Wall mounted cases 2
Accessories for cabinets and wall mounted cases . 3
Climate control . 4
Electronics cases 5
Subracks/ 19" chassis 6
Front panels, plug-in units . . . 7
Systems 8
Power supply units 9
Backplanes . . . 10
Connectors, front panel component system 11
Appendix 12

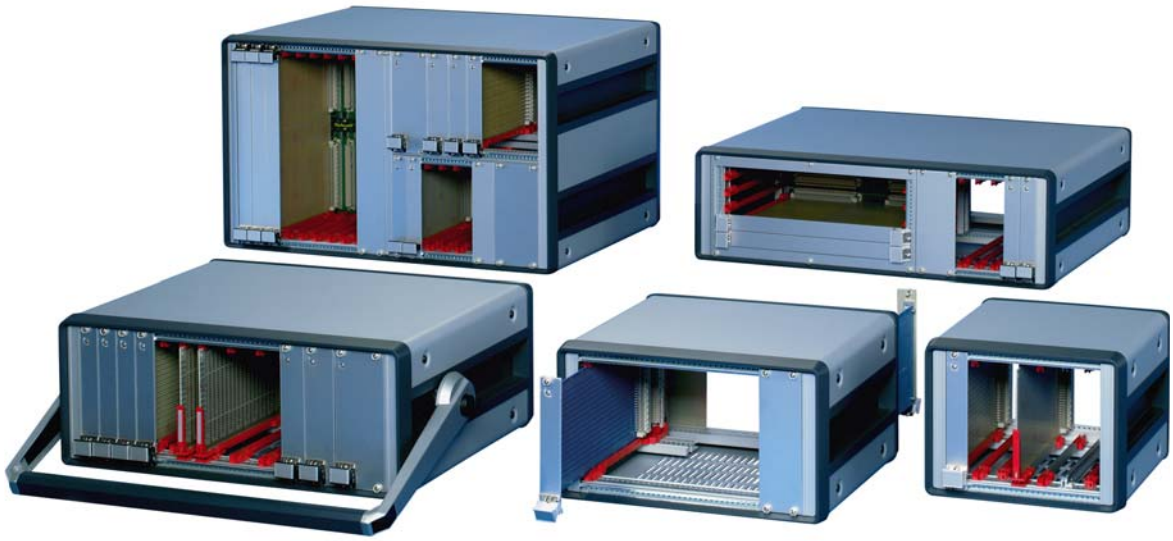

02004009

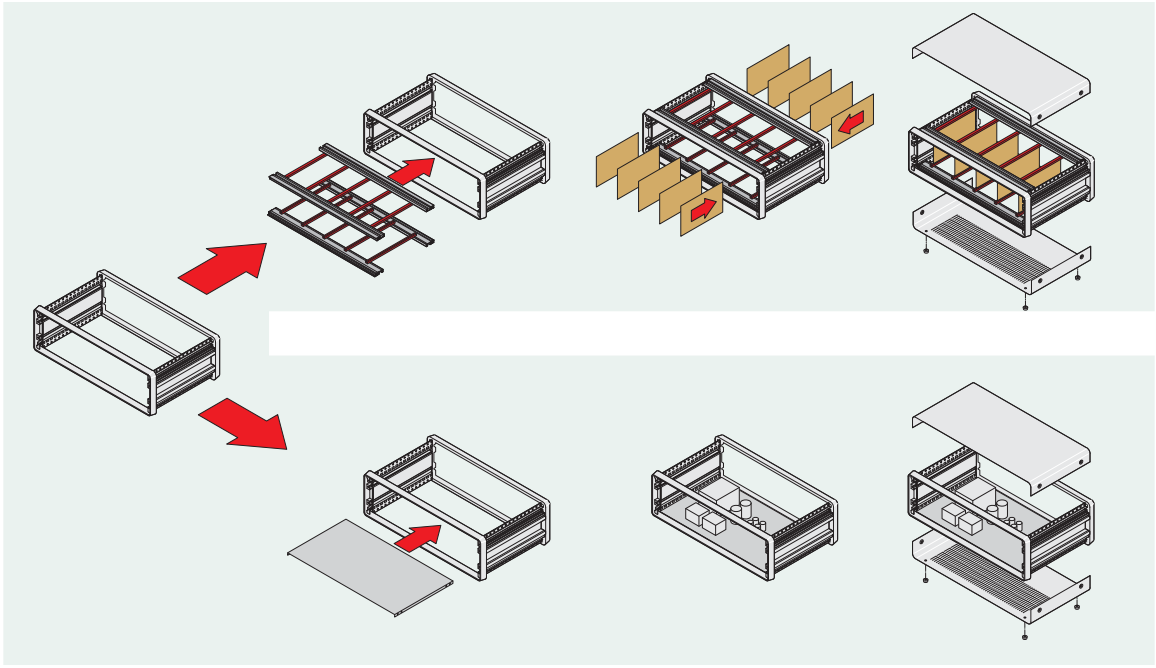

02004079

Flexible expansion options, for 19" components e.g. plug-in unit units, or for individual expansion

Standards

- Interior dimensions in accordance with: IEC 60297-3-101
- Type of protection IP 20 in accordance with IEC 60529
- GND/earth connections in accordance with:
  DIN EN 50178 / VDE 0160
  DIN EN 60950 / VDE 0805
  DIN EN 61010-1 / VDE 0411 part 1
  DIN EN 61010-1A2 / VDE 0411 part 1/A12

Desk-top cases – compacPRO

Overview . . . 5.76

Robust desk-top case for 19" components in accordance with IEC 60297-3-10x or for individual electronics assemblies

- Front and rear identical, depth-symmetrical construction
- Highly robust thanks to die-cast frame (front/rear)
- Side panel with integrated handle function

Desk-top cases

- **Complete case**
  - Pre-configured case, prepared for 19" components
  - Case height 3 U and 6 U

02009005 02004006

- **Case**
  - Case height 2 U, 3 U, 4 U and 6 U

02004002

Extensive accessory range

30407004

ServicePLUS from page 5.4

e.g. modifications (special colours, special depths, cut-outs in top cover, base plate or side panels)
e.g. assembly service from 1 piece

www.schroff.biz/ServicePLUS

compacPRO
Complete cases 3, 6 U 5.78
Cases 2, 3, 4 U . . 5.79
6 U cases 5.80

Accessories
Filler angle 5.81
Cable holder 5.81
Front panel/rear panel 5.82
Rear feet 5.83
Edge protection. 5.83
Hood 5.84
Front door 5.85
Handle 5.86
GND/earthing . . . 5.86
Feet 5.87
Horizontal rail . 5.88
Threaded inserts 5.90
Guide rails and ESD clips 5.92
Mounting plates. 5.94
Combined mounting 5.95
Horizontal board assembly 5.96
Air flow barrier . . 5.97
Dimensions 5.98

ServicePLUS . . 5.4

Complete cases 3 and 6 U

02009005

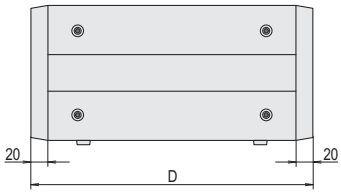

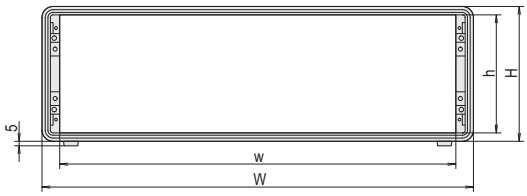

02004054

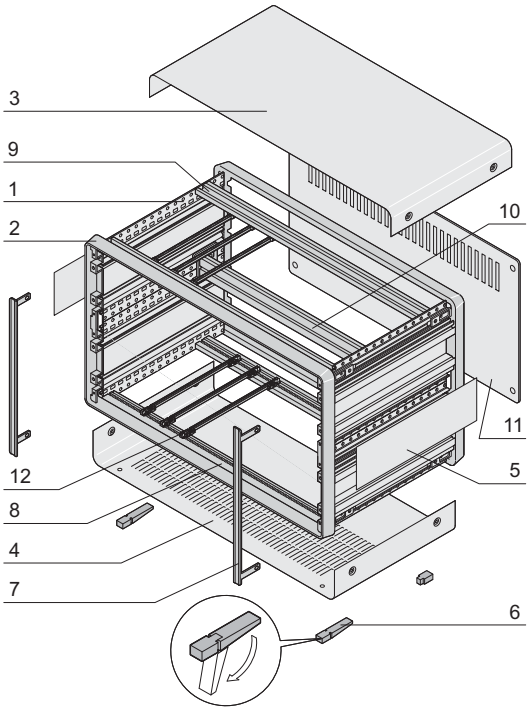

02008050

- Desk-top case with pre-configured components in accordance with IEC 60297-3-101; prepared for 19" components such as plug-in units and euroboards
- For backplane mounting with insulation strips
- Ventilation slots in base plate
- Ventilation slots in rear panel

Delivery comprises (Kit, items 1, 2, 6, 8 fitted)

Item	Qty 3 U	Qty 6 U	Description
1	2	4	Side panel, Al extrusion, powder-coated, RAL 7016
2	2	2	Frame, Al die-cast, powder-coated, RAL 7016
3	1	1	Cover plate, Al, 1.5 mm, powder-coated, RAL 9006, with GND/earthing tag
4	1	1	Base plate with 4 rows of ventilation slots, Al, 1.5 mm, powder-coated, RAL 9006, with GND/earthing tag
5	-	2	Side plate powder-coated, RAL 9006, Al, 0.8 mm
6	4	4	Tip-up foot with anti-slip protection, PA, RAL 7016, UL 94 V-0
7	2	2	Cover bracket, Al extrusion, anodised, cut edges plain
8	2	2	Horizontal rail, Al extrusion, with threaded insert, St, M2.5
9	2	2	Rear horizontal rail, Al extrusion, with threaded insert, St, M2.5 and insulation strip, PBT, UL 94 V-0 (for indirect backplane mounting)
10	-	1	Centre horizontal rail, Al extrusion, anodised, conductive surfaces, with two threaded inserts, St, M2.5 and two insulation strips, PBT, UL 94 V-0
11	1	1	Rear panel with 1 row of ventilation slots, Al, anodised, 2 mm for 28, 42 and 63 HP, 2.5 mm for 84 HP
12	10/20	10/20	Guide rail for 160 mm board length, PBT, UL 94 V-0, 28/42 HP 10 pieces, 63/84 HP 20 pieces
13	1	1	GND/earthing kit
14	1	1	Assembly kit, also allows the fitting of a full-width front panel

Order Information

Height H	Width W	Depth D	Usable width w	Usable width w	Part no.
U	mm	mm	HP	mm	
3	186	271	28	148	14575-114
3	186	331	28	148	14575-115
3	257	271	42	219	14575-134
3	257	331	42	219	**14575-135**
3	257	391	42	219	**14575-136**
3	364	271	63	326	**14575-154**
3	364	331	63	326	**14575-155**
3	364	391	63	326	14575-156
3	471	271	84	432	**14575-174**
3	471	331	84	432	**14575-175**
3	471	391	84	432	**14575-176**
3	471	511	84	432	**14575-178**
6	471	391	84	432	14575-476
6	471	451	84	432	14575-477

Maximum mounting depth = D - 21 (open space: front panel - rear panel)

Note

- Dimensions of case, side panel see from page 5.98

ServicePLUS see page 5.4

Desk-top cases – compacPRO

Cases 2, 3 and 4 U

02004005

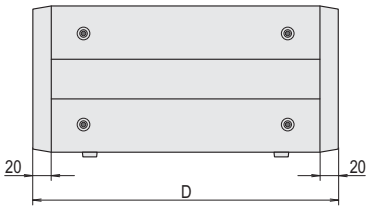

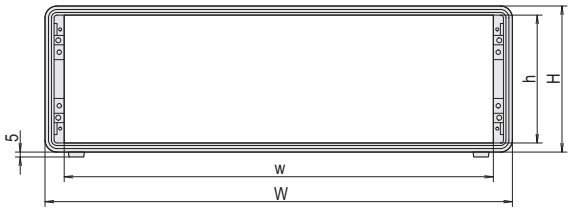

02004054

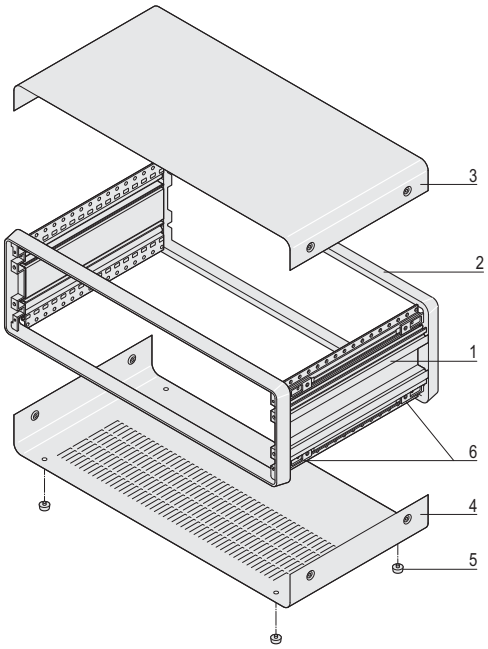

02004053

- Desk-top case, pre-configures, for individual assembly
- For backplane mounting with insulation strips
- Ventilation slots in base plate

Delivery comprises (Kit, items 1 and 2 fitted)

Item	Qty	Description
1	2	Side panel, Al extrusion, powder-coated, RAL 7016
2	2	Frame, Al die-cast, powder-coated, RAL 7016
3	1	Cover plate, Al, 1.5 mm, powder-coated, RAL 9006, with GND/earthing connection
4	1	Base plate with 4 rows of ventilation slots, Al, 1.5 mm, powder-coated RAL 9006, with earthing connection
5	4	Case foot with anti-slip protection, PC, black
6	8	Fixing adaptor for cover plate, prefitted
7	1	Assembly kit, also allows the fitting of a full-width front panel, two cover brackets or a rear panel

Order Information

Height	Usable width	Width W	Width w	Height H	Height h	Depth D	Part no.
U	HP	mm	mm	mm	mm	mm	
2	42	257	219	102.6	84.4	271	**14575-023**
2	42	257	219	102.6	84.4	331	**14575-025**
2	42	257	219	102.6	84.4	391	**14575-027**
2	84	471	432	102.6	84.4	271	**14575-063**
2	84	471	432	102.6	84.4	331	**14575-065**
2	84	471	432	102.6	84.4	391	**14575-067**
3	28	186	148	147.1	129.3	271	**14575-103**
3	28	186	148	147.1	129.3	331	14575-105
3	42	257	219	147.1	129.3	271	**14575-123**
3	42	257	219	147.1	129.3	331	**14575-125**
3	42	257	219	147.1	129.3	391	**14575-127**
3	63	364	326	147.1	129.3	271	**14575-143**
3	63	364	326	147.1	129.3	331	**14575-145**
3	63	364	326	147.1	129.3	391	**14575-147**
3	84	471	432	147.1	129.3	271	**14575-163**
3	84	471	432	147.1	129.3	331	**14575-165**
3	84	471	432	147.1	129.3	391	**14575-167**
3	84	471	432	147.1	129.3	451	**14575-169**
3	84	471	432	147.1	129.3	511	**14575-171**
4	42	257	219	191.6	173.8	271	**14575-223**
4	42	257	219	191.6	173.8	331	**14575-225**
4	63	364	326	191.6	173.8	271	**14575-243**
4	63	364	326	191.6	173.8	331	**14575-245**
4	63	364	326	191.6	173.8	391	**14575-247**
4	84	471	432	191.6	173.8	331	**14575-265**
4	84	471	432	191.6	173.8	391	**14575-267**
4	84	471	432	191.6	173.8	451	**14575-269**
4	84	471	432	191.6	173.8	511	**14575-271**

ServicePLUS see page 5.4

Desk-top cases – compacPRO

6 U cases

02004006

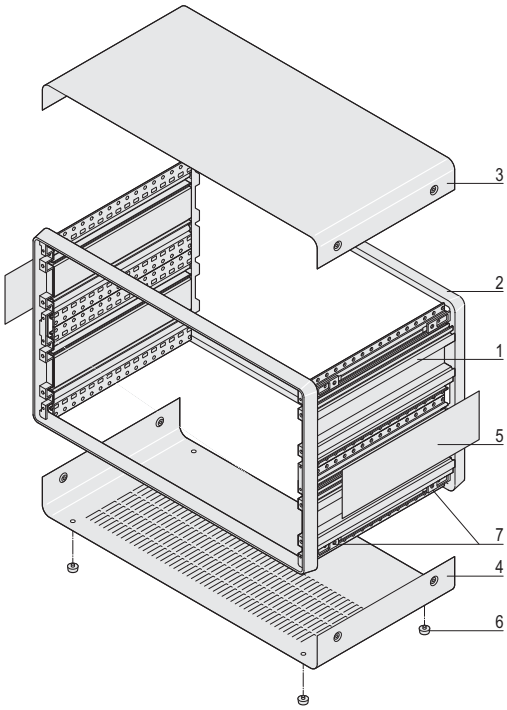

02004055

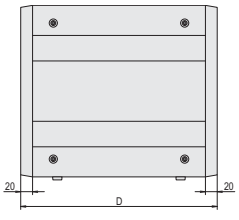

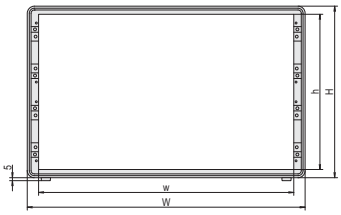

02004056

- Desk-top case, pre-configured, for individual assembly
- For backplane mounting with insulation strips
- Ventilation slots in base plate

Delivery comprises (Kit items 1, 2 and 5 fitted)

Item	Qty	Description
1	4	Side panel parts, Al extrusion, powder-coated, RAL 7016, 2 x 3 U
2	2	Frame, Al die-cast, powder-coated, RAL 7016
3	1	Cover plate, Al, 1.5 mm, powder-coated, RAL 9006, with GND/earthing tag
4	1	Base plate with 4 rows of ventilation slots, Al, 1.5 mm, powder-coated, RAL 9006, with GND/earthing tag
5	2	Side plate, Al, 0.8 mm, powder-coated, RAL 9006
6	4	Case foot with anti-slip protection, PC, black
7	8	Fixing adaptor for cover plate, prefitted
8	1	Assembly kit also allows the fitting of a full-width front panel, two cover brackets or a rear panel

Order Information

Usable width	Width W	Width w	Height H	Height h	Depth D	Part no.
HP	mm	mm	mm	mm	mm	
63	364	326	280.5	262.9	331	**14575-445**
63	364	326	280.5	262.9	391	**14575-447**
84	471	432	280.5	262.9	271	**14575-463**
84	471	432	280.5	262.9	331	**14575-465**
84	471	432	280.5	262.9	391	**14575-467**
84	471	432	280.5	262.9	451	**14575-469**
84	471	432	280.5	262.9	511	**14575-471**

ServicePLUS see page 5.4

Desk-top cases – compacPRO

Filler angle

02005002

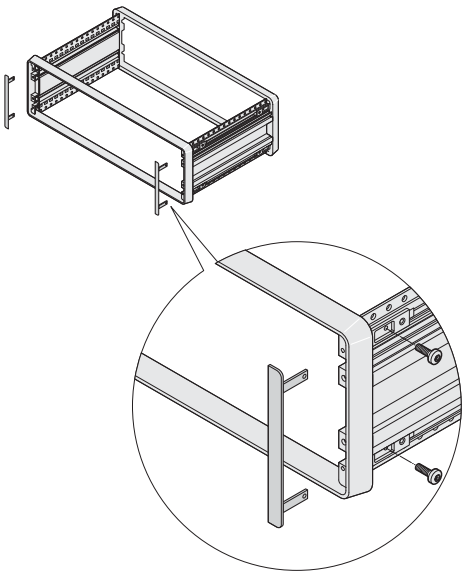

02004062

- To cover the sides of the frame and to create a continuous front plane with plug-in units and partial-width front panels
- This filler angle is recommended when fitting horizontal rails

Delivery comprises

Item	Qty	Description
1	2	Filler angle, Al extrusion, anodised, cut edges plain

Order Information

Height U	Part no.
2	**24575-019**
3	**24575-119**
4	**24575-219**
6	**24575-419**

Note

- Fixing material is supplied with case

Cable holder

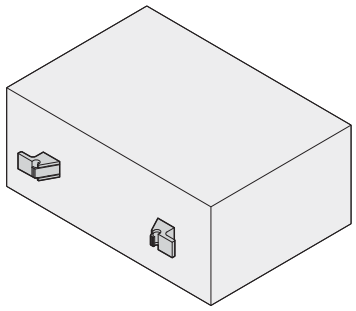

02908053

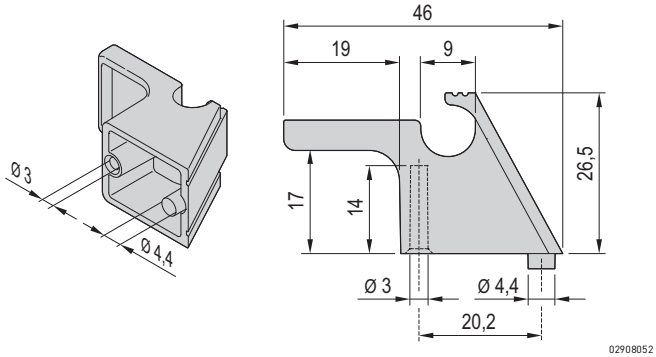

02908052

Delivery comprises (kit)

Item	Qty	Description
1	2	Cable bracket, ABS, UL V-94 0, RAL 7016, detent for cables between 8 mm and 12 mm
2	1	Drilling template, two drill holes each per bracket are needed in rear panel
3	1	Assembly kit

Order Information

Description	Part no.
Cable holder	**24575-800**

Front panel and rear panel

02005001

Rear panel/front panel

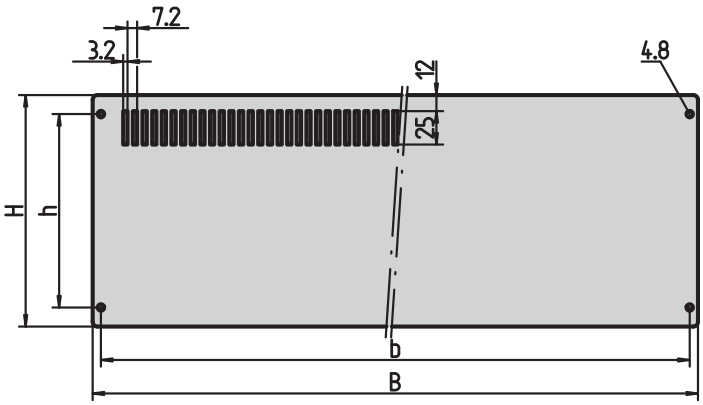

CPA30656

- Front panels and rear panels are screwed on front or rear frame of case

Delivery comprises (kit)

Item	Qty	Description
1	1	Rear panel with 4 rows of ventilation slots, Al, anodised, cut edges plain; 28, 42, 63 HP = 2 mm thick; 84 HP = 2.5 mm thick
2	1	Front panel, Al, anodised, cut edges plain, 3 mm thick

Order Information

Height	Width	Height H	Height h	Width B	b	Rear panel	Front panel
U	HP	mm	mm	mm	mm	Part no.	Part no.
2	42	84	66	238.7	226.3	**30823-015**	**30823-209**
2	84	84	66	452.1	439.7	**30823-512**	**30823-215**
3	28	128.4	100	167.5	155.1	**30823-021**	**30823-254**
3	42	128.4	100	238.7	226.3	**30823-024**	**30823-257**
3	63	128.4	100	345.4	333.1	**30823-027**	**30823-224**
3	84	128.4	100	452.1	439.7	**30823-515**	**30823-260**
4	42	172.9	144.5	238.7	226.3	**30823-033**	**30823-269**
4	63	172.9	144.5	345.4	333.1	**30823-036**	**30823-227**
4	84	172.9	144.5	452.1	439.7	**30823-518**	**30823-272**
6	63	261.8	233.4	345.4	333.1	**30823-045**	**30823-230**
6	84	261.8	233.4	452.1	439.7	**30823-521**	**30823-284**

Note

- Assembly kit to fix one rear and one front panel is included with the case
- Cable holder and rear feet, see from page 5.81

Front panel/rear panel with hidden fixing

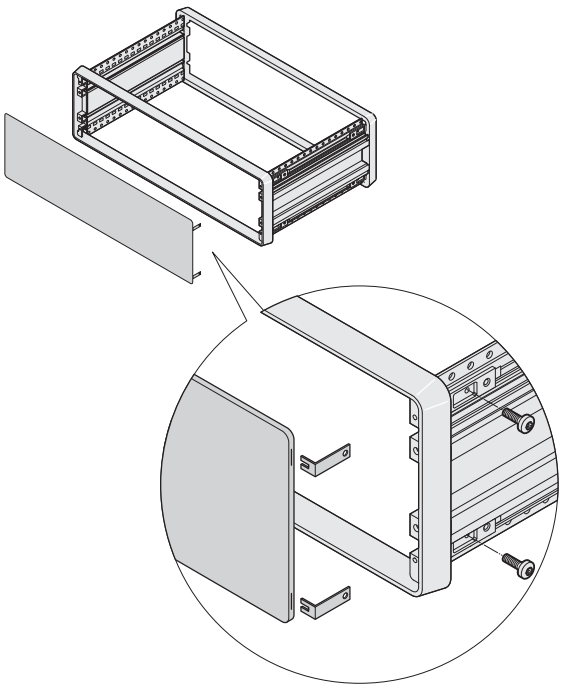

02004061

Delivery comprises (kit)

Item	Qty	Description
1	1	Front panel, Al, anodised, cut edges plain, 2.5 mm
2	4	Fixing bracket

Order Information

Height	Width	Height H	Height h	Width B	b	Part no.
U	HP	mm	mm	mm	mm	
2	42	84.0	66.0	238.7	226.3	**24575-035**
2	84	84.0	66.0	452.1	439.7	**24575-075**
3	28	128.4	100.0	167.5	155.1	**24575-115**
3	42	128.4	100.0	238.7	226.3	**24575-135**
3	63	128.4	100.0	345.4	333.1	**24575-155**
3	84	128.4	100.0	452.1	439.7	**24575-175**
4	42	172.9	144.5	238.7	226.3	**24575-235**
4	63	172.9	144.5	345.4	333.1	**24575-255**
4	84	172.9	144.5	452.1	439.7	**24575-275**
6	63	261.8	233.4	345.4	333.1	**24575-455**
6	84	261.8	233.4	452.1	439.7	**24575-475**

Note

- Cable holder and rear feet see from page 5.81

Desk-top cases – compacPRO

Rear foot with rubber insert

02005004

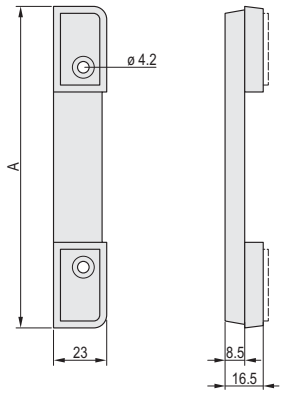

02004063

Delivery comprises

Item	Qty	Description
1	2	Foot with rubber insert, PC, UL 94 V-0, RAL 7016
2	1	Fixing material

Order Information

For case height U	A mm	Part no.
3	139	**24575-114**
4	183.5	**24575-214**

Edge protection/rear foot

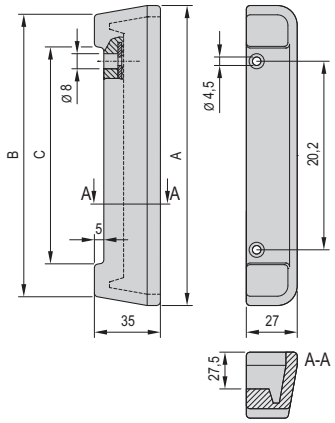

02908054

Delivery comprises

Item	Qty	Description
1	2	Edge protection, PU foam, black
2	1	Assembly kit

Order Information

For case height U	A mm	B mm	C mm	Part no.
3	159.1	114.0	100.0	**20823-675**
4	203.6	159.0	144.5	**20823-676**

Rear foot for hood

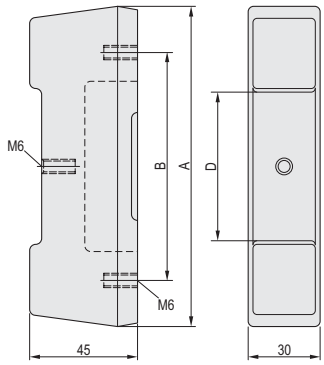

02004065

Delivery comprises

Item	Qty	Description
1	2	Foot, PU foam, black, 75° shore
2	1	Fixing material

Order Information

Height U	A mm	B mm	D mm	Part no.
3	133.5	95	65	**20823-668**
4	177.8	139.5	95	**20823-669**

- Rear panel, see page 5.82

Dimensions for modifying the rear panel

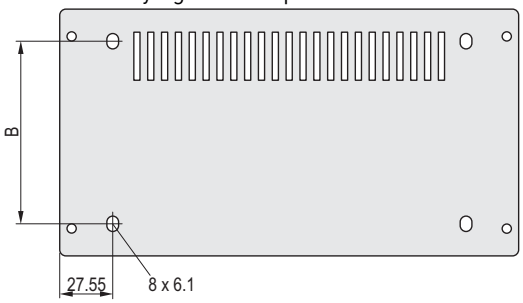

02004066

Hood

02005006

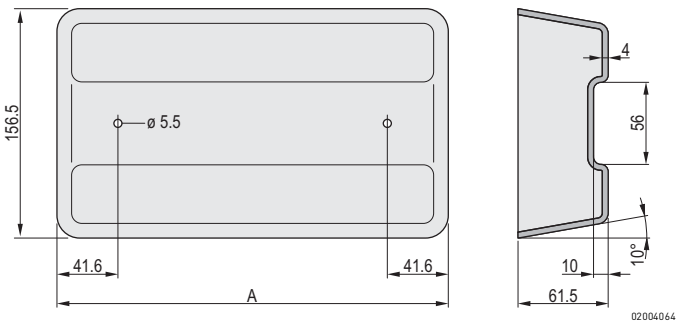

02004064

Delivery comprises

Item	Qty	Description
1	1	Hood, ABS, RAL 7016, wall thickness < 4 mm, fixing with knurled screws
2	1	Assembly kit

Order Information

Height U	Width HP	A mm	Part no.
3	42	267	**24575-136**
3	63	373.5	**24575-156**
3	84	480	**24575-176**
Cable support PC, black, UL 94 V-0, PU 2 pieces			**20823-674**

Note

- Cable support can only be fitted in conjunction with rear foot for hood
- To fit the hood, the rear panel and the rear foot for hood must be mounted on the case
- Rear panel, see page 5.82
- Rear foot for hood see page 5.84

Cable support

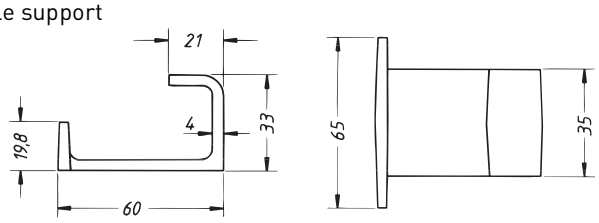

A4-512

Desk-top cases – compacPRO

Front door, acrylic glass, hinged

02005003

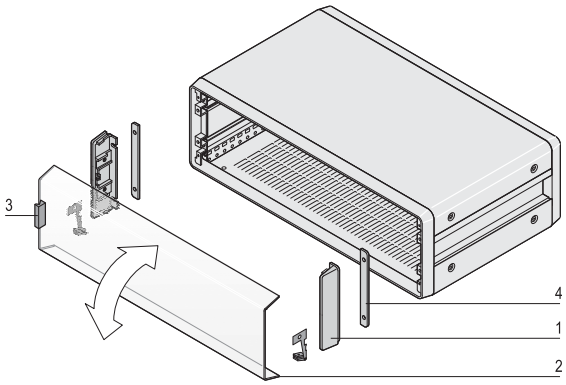

02004069

- Assembly of the hinge to top or bottom
- With snap-on latch
- Lock retrofittable

Delivery comprises (kit)

Item	Qty	Description
1	2	Side part, Al die-cast, powder-coated, RAL 7016
2	1	Front door, PMMA, tinted blue-grey, acrylic glass, 3 mm
3	1	Snap-on latch, PC, UL 94 V-0, black
4	2	Spacer plate, Al, 3 mm, passivated
5	1	Assembly kit

Order Information

Height U	Width HP	Part no.
3	42	**24575-137**
3	63	**24575-157**
3	84	**24575-177**
Lock for front door cylinder, 2 keys, assembly parts		**21100-647**

Dimensions table

Height U	b TE	H mm	h mm	B mm
3	42	139,50	128,40	229,60
3	63	139,50	128,40	336,40
3	84	139,50	128,40	443,00

Front door, hinged

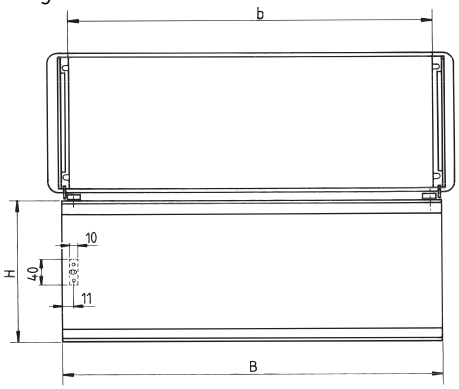

a4-2265

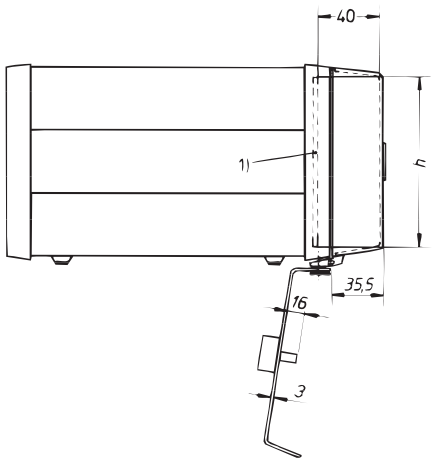

a4-225

1) Front panel

Tip-up carrying handle

02004002

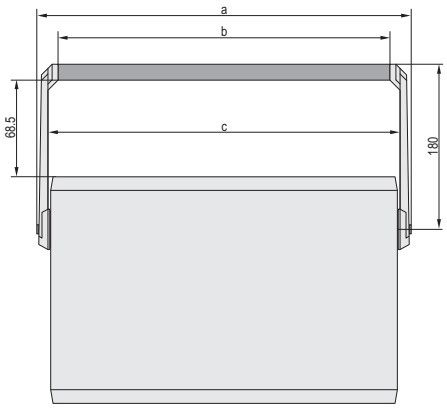

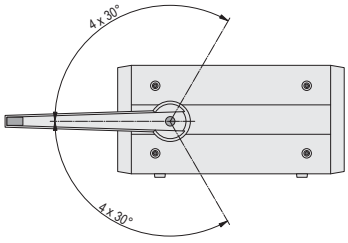

02004080

- With powder-coated handle bar
- Handle bar adjustable in 30 degree increments by pressing button
- Load-carrying capacity 20 kg

Delivery comprises (kit)

Item	Qty	Description
1	1	Carrying bar, Al profile, powder-coated, RAL 7016
2	2	Lateral section of handle, Zn die-cast, powder coated, length 180 mm
3	2	Safety insert, St, 1.5 mm, black
4	1	Fixing material incl. drilling template for side panel

Order Information

For case height U	Width HP	Part no.
2	42	**24575-038**
2	84	**24575-078**
3, 4	28	**24575-118**
3, 4	42	**24575-138**
3, 4	63	**24575-158**
3, 4	84	**24575-178**

Dimensions

Case width HP	a mm	b mm	c mm
28	249.32	180.32	202.72
42	320.44	251.44	273.84
63	427.12	358.12	380.52
84	533.80	464.80	487,20

GND/earthing kit

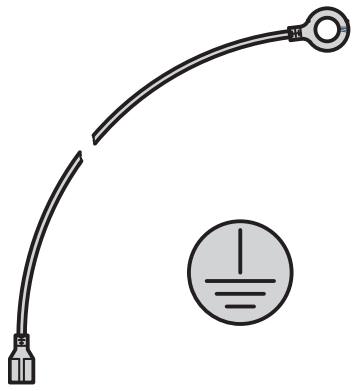

aza43284

- Protective GND/earth connections in accordance with
  DIN EN 50178/VDE 0160,
  DIN EN 60950/VDE 0805,
  DIN EN 61010-1/VDE 0411 part 1,
  DIN EN 61010-1A2 /VDE 0411 part 1/A1
  VDE inpection requested

Order Information

Description	Qty/PU	Part no.
GND/earthing kit, CU wire 1.5 mm^2, PVC covered, green/yellow, links side panel, base plate, cover and rear panel	1	**24575-801**

Desk-top cases – compacPRO

Plastic tip-up feet

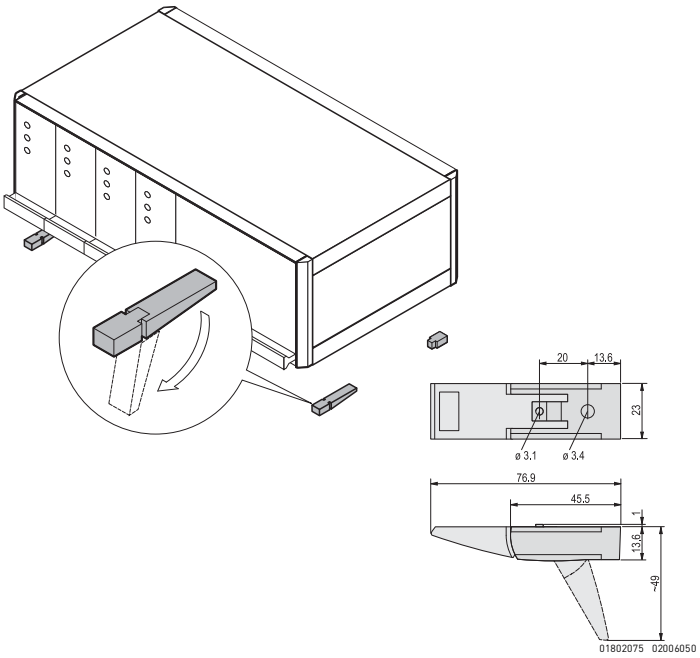

- Static load-carrying capacity 25 kg per foot
- Tip-up feet can be used instead of the case feet fitted as standard
- Fixing holes provided in bottom of case

Delivery comprises (kit)

Item	Qty	Description
1	4	Foot, PA, UL 94 V-0
2	4	Anti-slip protection, TPE
3	2	Tip-up device, PA, UL 94 V-0
4	1	Assembly kit

Order Information

Description	RAL 7016 anthracite Part no.	RAL 9006 silver Part no.
Plastic tip-up foot	**20603-002**	**20603-001**

Al die-cast tip-up foot

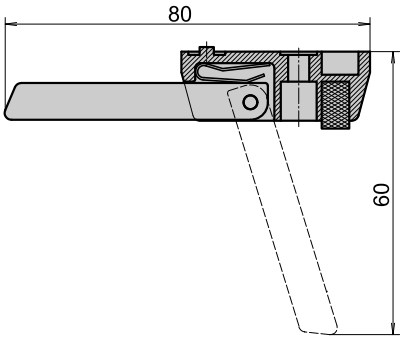

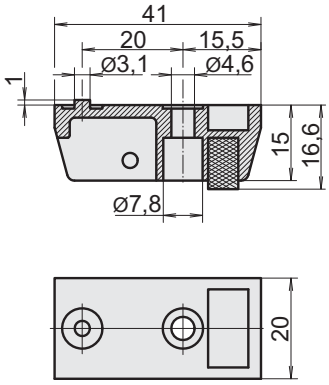

- Static load-carrying capacity 50 kg per foot
- Tip-up feet can be used instead of the case feet fitted as standard
- Fixing holes provided in bottom of case

Order Information

Description	Qty	Part no.
Foot without tip-up, Al die-cast, silver	1 piece (SPQ 10)[1)]	**10603-001**
Foot with tip-up, Al die-cast, silver	1 piece (SPQ 10)[1)]	**10603-002**
Accessories		
Cheesehead screw with slot M4 × 12, St, zinc-plated, PU 100 pieces		**21101-211**
Hexagon nut M4, St, zinc-plated, PU 100 pieces		**21100-211**
Spring washer A4, St, zinc-plated, PU 100 pieces		**21100-207**

1) Delivery is exclusively in Standard Pack Quantity (SPQ): Please order at least 10 pieces or a multiple. Pricing is per individual item.

Mounting position horizontal/central rail

Case, 2 U

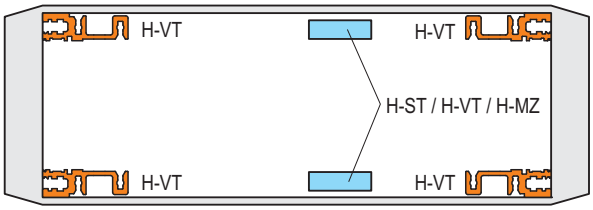

02004073

Case, 3 U + 4 U

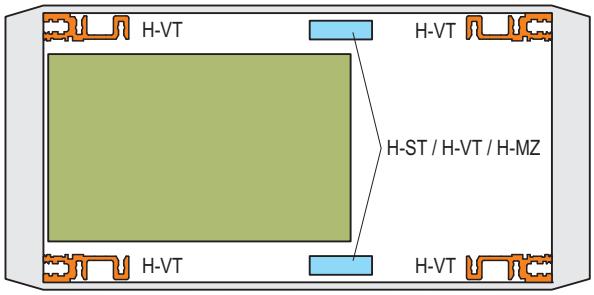

02004074

Case, 6 U

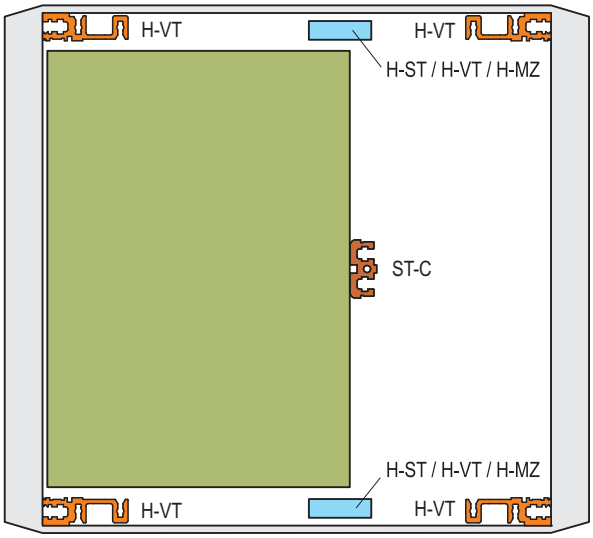

02004076

Case 2 x 3 U (6 U)

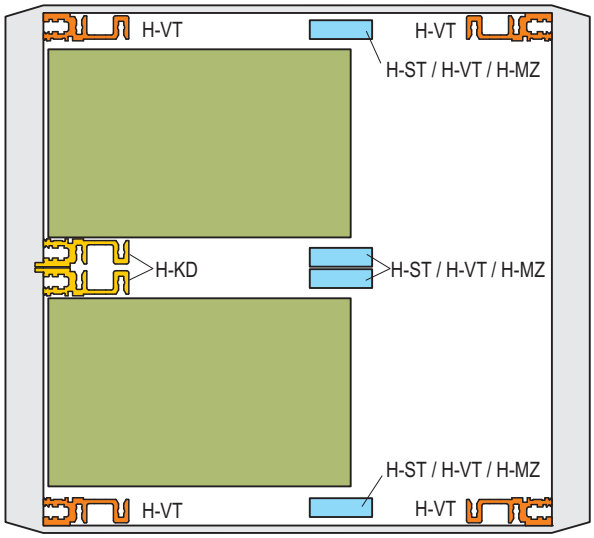

02004077

Horizontal rails

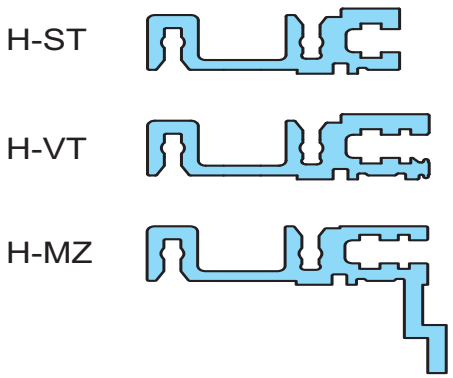

02004078

Desk-top cases – compacPRO

Horizontal rails to front/centre/rear

Order Information

		For indirect backplane fixing with insulation strip	For direct backplane fixing	For direct fixing of connectors in accordance with EN 60603-2 (DIN 41612)	Front horizontal rails
		04400001	04400002	04400003	
		"heavy" Type H-ST standard	"heavy" Type H-VT long lip	"heavy" Type H-MZ with Z-rail	"heavy" Type H-KD short lip
		06197011	06197013	06197015	06197008
		Al extrusion, anodised finish, conductive contact surface, with printed HP markings	Al extrusion, anodised finish, conductive contact surface, with printed HP markings	Al extrusion, anodised finish, conductive contact surface, with printed HP markings	Al extrusion, anodised finish, conductive contact surface, with printed HP markings
Usable length HP	Length mm	1 piece (SPQ 10)[1]	1 piece (SPQ 10)[1]	1 piece (SPQ 10)[1]	1 piece (SPQ 10)[1]
28	147.32	**34560-528**	**34560-728**	**34560-928**	**34560-228**
42	218.44	**34560-542**	**34560-742**	**34560-942**	**34560-242**
63	325.12	**34560-563**	**34560-763**	**34560-963**	**34560-263**
84	431.80	**34560-584**	**34560-784**	**34560-984**	**34560-284**
Torx countersunk screw, , M4 × 14, St, zinc-plated, PU 100 pieces		**24571-371**	**24571-371**	**24571-371**	**24571-371**
Torx countersunk screw, , M4 × 10, St, zinc-plated, required if guide rail is screwed to slot 1, PU 100 pieces		–	–	**24571-372**	**24571-372**
Z-rail for connector mounting without insulation strip see page		5.91	–	–	–
Insulation strips see page		–	5.90	–	–
Threaded inserts see page		5.90	5.90	5.90	5.90

1) SPQ (standard pack quantity): Order number includes 1 piece, but delivery is exclusively made in standard pack quantity (SPQ); please order at least the SPQ quantity or a multiple thereof

Note

- Further horizontal rails, see from page 6.27
- Fitting options, see page 5.88

Horizontal rail, centre, type ST-C

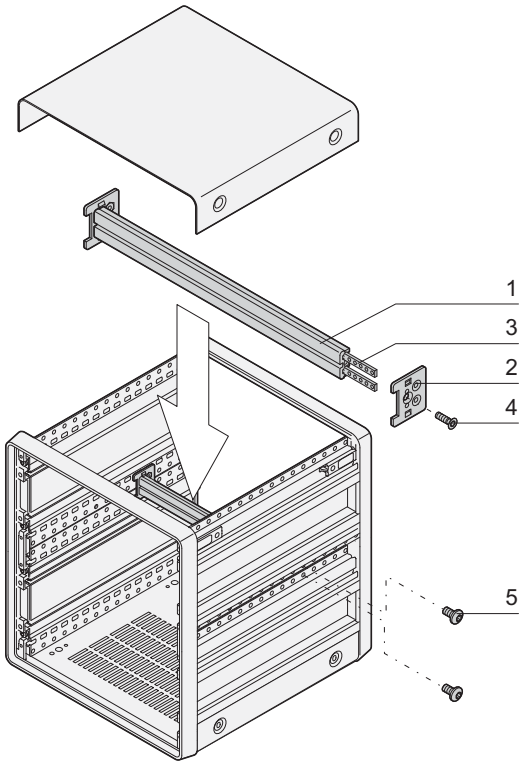

- For indirect backplane mounting (with insulation strip)
- For 6 U compacPRO case

Delivery comprises (Kit, items 1 to 4 are pre-mounted)

Item	Qty	Description
1	1	Horizontal rail, Al extrusion, anodised, contact surfaces conductive
2	2	Adaptor plate, Al
3	2	Threaded insert, M2.5, St, zinc-plated
4	2	Countersunk screw, M4 x 14
5	4	Panhead screw, M4 x 6

Order Information

Usable width HP	Length mm	Part no.
63	325.1	**24575-454**
84	431.8	**24575-474**

Threaded inserts, perforated strips, insulation strips

Order Information

Threaded insert

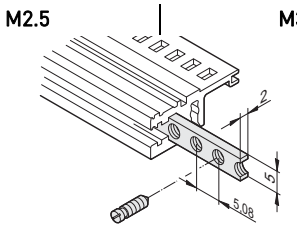

06103056

required for fixing the front panel to the horizontal rail; St, zinc-plated; Use collar screw 12.3 mm, see page 6.64

Insulation strip

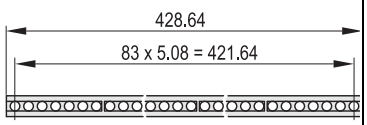

BZ6749

for insulated mounting of backplane; PBT UL 94 V-0, grey

Usable length HP	Threaded insert Length mm	1 piece (SPQ 10)[1]	1 piece (SPQ 10)[1]	Insulation strip Length mm	PU 10 pieces
28	146.82	**34561-328**	–	144.20	**24560-828**
42	217.94	**34561-342**	–	210.40	**24560-842**
63	324.62	**34561-363**	–	316.88	**24560-863**
84	431.30	**34561-384**	**34561-484**	428.64	**24560-884**
Accessories					
Grub screw M2.5 x 8, PU 100 pieces		**21100-276**	–		–
Grub screw M3 x 8, PU 100 pieces		–	**21100-646**		–

1) SPQ (standard pack quantity): Order number includes 1 piece, but delivery is exclusively made in standard pack quantity (SPQ); please order at least the SPQ quantity or a multiple thereof

2) Part no. includes one packing unit (PU); delivery is exclusively made in PU

Desk-top cases – compacPRO

Z-rails, perforated rails

Order Information

		Z-rail for connectors		Perforated rail
		DIN EN 60603-2, DIN 41612 item 1	31-pin, DIN 41617	EN 606032, DIN 41612 item 1
		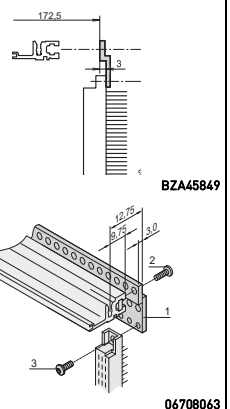	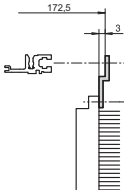	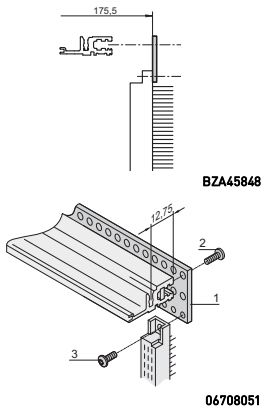
		for connector mounting on ST horizontal rails, please order threaded insert and screw separately	for connector mounting on ST horizontal rails, please order threaded insert and screw separately	for connector mounting on VT horizontal rails, please order threaded insert and screw separately
Usable length HP	Length mm	1 piece	1 piece	PU 4 pieces
28	142.24	**30822-033**	–	**20822-049**
42	213.36	**30822-047**	–	**20822-050**
60	304.80	**30822-065**	**30819-783**	**20822-047**
84	426.70	**30822-089**	**30819-808**	**20822-048**
Item 3, Torx panhead screw to fix connector to perforated rail,, M2.5 × 7, PU 100 pieces		**24560-147**	**24560-147**	**24560-147**
Item 2, Torx panhead screw, to fix perforated rails to horizontal rail, M2.5 × 10, PU 100 pieces		**24560-148**	**24560-148**	**24560-148**

Guide rails for plug-in units and modules, one-piece, groove width 2 mm and 2.5 mm

Order Information

Assembly
- can be clipped into Al extruded horizontal rails
- can be clipped into 1.5 mm thick plates

Storage temperature
from -40 °C ... 130 °C

Board length	Groove width	Colour	For plug-in units and frame type plug-in units	
			standard	standard, with DIN connector fixing
			06102002	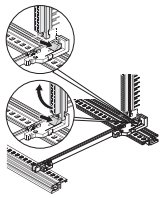 06101501
			up to 220 mm length, PBT, UL 94 V-0; from 280 mm length, multi-piece, end piece PBT, UL 94 V-0, central section Al extrusion	PBT, UL 94 V-0, red, connector is clipped directly onto the guide rails; for euroboards, 100 x 160 mm or 100 x 220 mm only
mm	mm	mm	PU 10 pieces	1 pair (SPQ 10)[1]
70	2	red	–	–
70	2	grey	–	–
160	2	red	**24560-351**	**64560-074**
220	2	red	**24560-353**	**64560-075**
280	2	red	**24560-379**	–
340	2	red	**24560-380**	–
160	2.5	red	–	–
220	2.5	red	–	–
Dimension drawings see page			6.40	6.40

Accessories

Retention screw, PU 100 pieces 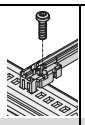	**24560-141**	**24560-141**
ESD clip, PU 50 pieces	**24560-255**	**24560-255**

1) SPQ (standard pack quantity): Order number includes 1 piece, but delivery is exclusively made in standard pack quantity (SPQ); please order at least the SPQ quantity or a multiple thereof

2) Part no. includes one packing unit (PU); delivery is exclusively made in PU

Description of accessories see from page 6.41

Desk-top cases – compacPRO

Guide rails type "accessory", one-piece, groove width 2 mm and 2.5 mm

Order Information

Assembly
- can be clipped into horizontal rails in Al extrusion
- can be clipped into 1.5 mm thick plate

Storage temperature
from -40 °C ... +130 °C

Board length mm	Groove width mm	Colour mm	Guide rails type: accessory 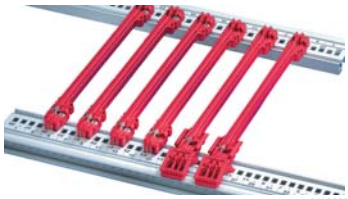 06102002 up to 280 mm length, PBT, UL 94 V-0; > 280 mm length, multi-piece, end piece PBT, UL 94V-0, middle section Al extrusion PU 10 pieces	accessory, strengthened 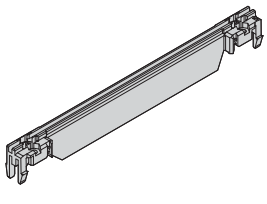 bza46554 PBT UL 94 V?0, red support beam of guide rails adds to strengthening 1 piece (SPQ 50)	for heavy modules, Al extrusion, silver, robust version 06102005 Al extrusion; is screwed to horizontal rail "heavy" with retention screws 1 piece (SPQ 10)[1]
100	2	red	–	–	–
160	2	red	**24560-373**	**64560-076**	–
160	2	grey	–	–	**34562-881**
220	2	red	**24560-374**	**64560-078**	–
220	2	grey	–	–	**34562-882**
280	2	red/ silver	**24560-375**	**64560-080**	**34562-883**
340	2	red/ silver	**24560-376**	–	**34562-884**
400	2	red/ silver	–	–	**34562-885**
160	2.5	silver	–	–	**34564-881**
220	2.5	silver	–	–	**34564-882**
280	2.5	silver	–	–	**34564-883**
340	2.5	silver	–	–	**34564-884**
400	2.5	silver	–	–	**34564-885**
Dimension drawings see page			6.40	6.40	6.40

Accessories

Retention screw, PU 100 pieces 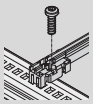	**24560-141**	**24560-141**	**24560-157**
ESD clip, PU 50 pieces	**24560-255**	**24560-255**	–
Board locking C, red, PU 10 pieces	**24560-377**	**24560-377**	–
Board handleC , red, PU 10 piecesdescription	**24560-378**	**24560-378**	–
Identification strips for board handle, red, PU 1 sheet = 438 pieces	**60817-228**	**60817-228**	–
Coding see page	see page 6.41		–

1) SPQ (standard pack quantity): Order number includes 1 piece, but delivery is exclusively made in standard pack quantity (SPQ); please order at least the SPQ quantity or a multiple thereof

2) Part no. includes one packing unit (PU); delivery is exclusively made in PU

Further guide rails see page 6.35

Mounting plates

Order Information

Width W		Board length	Mounting plate for fixing of heavy components	
			Mounting plate over **full width**: mounting is onto the side panels; mounting plate over **partial width**: mounting is onto one side panel and fixing strip or onto 2 fixing strips	**Assembly strip for partial widths**
			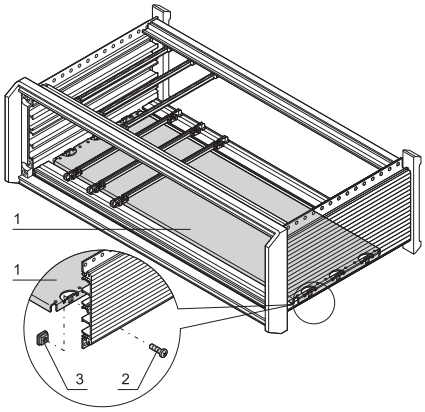	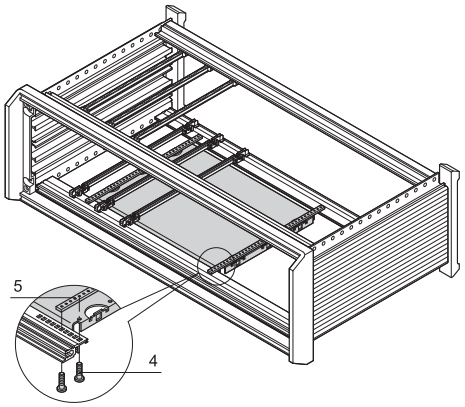
			Al, 1.5 mm; for mounting over partial width, please order assembly strips separately	St, 2 mm, zinc-plated; is bolted from front to rear onto the horizontal rails; to fix mounting plates
HP	**W**	**mm**		
28	146.88	160	**34562-745**	**30840-021**
28	146.88	220	**34562-749**	**30840-033**
28	146.88	280	**34562-753**	**30840-045**
28	146.88	340	**34562-757**	**30840-057**
42	217.99	160	**34562-746**	**30840-021**
42	217.99	220	**34562-750**	**30840-033**
42	217.99	280	**34562-754**	**30840-045**
42	217.99	340	**34562-758**	**30840-057**
63	324.67	160	**34562-747**	**30840-021**
63	324.67	220	**34562-751**	**30840-033**
63	324.67	280	**34562-755**	**30840-045**
63	324.67	340	**34562-759**	**30840-057**
84	431.35	160	**34562-748**	**30840-021**
84	431.35	220	**34562-752**	**30840-033**
84	431.35	280	**34562-756**	**30840-045**
84	431.35	340	**34562-760**	**30840-057**
Assembly kit for mounting plate PU 1 kit (Torx countersunk screw M4 x 5, St, zinc-plated, 12 pieces; screw M4 x 6, St, zinc-plated, 10 pieces; M4 square nut, St, zinc-plated, 10 pieces)			**24560-184**	–
Assembly kit for assembly strips of mounting plate, Torx screw M2.5 × 5, St, zinc-plated, PU 100 pieces M2.5 × 5, St, zinc-plated, PU 100 pieces			–	**24560-146**

Note

- For installation and assembly of heavier components
- The mounting plate is as wide as the case and is fixed to the side panels
- A guide rail can be mounted on the first and last slot positions
- 4.4" and "strengthened" guide rails cannot be used

Desk-top cases – compacPRO

Combined mountings (6 U and 2 x 3 U one above the other)

Order Information

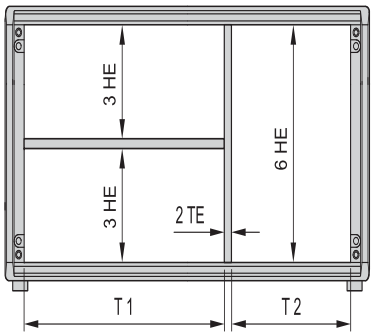 05806108	Combined mounting: horizontal and vertical subdivision (incl. front panel for stainless steel EMC gasket)	unshielded front panel, 6 U, 2 HP item 6	front panel for textile EMC gasket, 6 U, 2 HP item 6	Splitting extrusion for combined mounting Item 2
	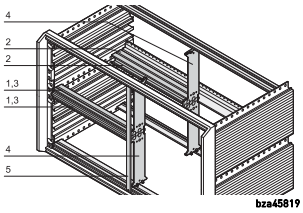 bza45819	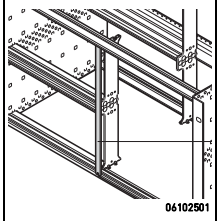 06102501	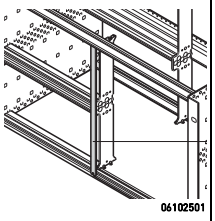 06102501	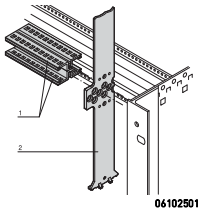 06102501
	item 1: 2 front horizontal rails (H-KD), Al extrusion, anodised; item 2: 2 rear horizontal rails (AB), Al extrusion, anodised; item 3: threaded insert, St, zinc-plated; item 4: Zn die-cast support member; item 6: front panel 2 HP, 6 U, shielded; with EMC stainless steel gasket (84:0 without items 4, 6)	Al, 2.5 mm, front anodised, rear iridescent green chromated	Al, 2.5 mm, U-profile with notch, 6 U, 2 HP	6 U, die-cast zinc; splitting extrusion is inserted in the grid holes of the horizontal rail; the splitting extrusion can be bolted
Width pitch T1:T2 HP	**PU 1 kit**	**1 piece (SPQ 5)**	**1 piece (SPQ 5)[1)]**	**1 piece**
20:62	**24562-420**	**30847-472**	**30849-140**	**64560-010**
40:42	**24562-440**			
42:40	**24562-442**			
63:19	**24562-463**			
84:0	**24562-484**			
Torx countersunk screw M4 × 14, zinc-plated, PU 100 pieces fixing splitting extrusion/horizontal rail	–	–	–	**24560-145**
Panhead screw M2.5 × 10, St, zinc-plated, PU 100 pieces finxing horizontal rail/splitting extrusion	–	–	–	**24560-179**
Pozidrive/slotted collar screw M2.5 x 12.3, St, nickel-plated, PU 100 pieces	–	**21101-101**	**21101-101**	–
Pozidrive/slotted collar screw M2.5, black, zinc-plated, PU 100 pieces	–	**21101-102**	**21101-102**	–
Washer 2.7 x 5 x 1, plastic PA 6, PU 100 pieces	–	**21101-121**	**21101-121**	–
Textile gasket, core: foam, sleeve: textile cladding with CuNi coating, UL 94 V-0, PU 10 pieces	–	–	**21101-855**	–

- Subdivision of the 6 U assembly area into:
  - 2 x 3 U
  - 1 x 6 U
- Designed to accept Euroboards (100 mm high) and double Euroboards (233.35 mm high)

Note

- Please order perforated strips for horizontal rails separately, see page 5.90
- Please order rear centre horizontal rail separately, see page 5.89

Horizontal board installation

Order Information

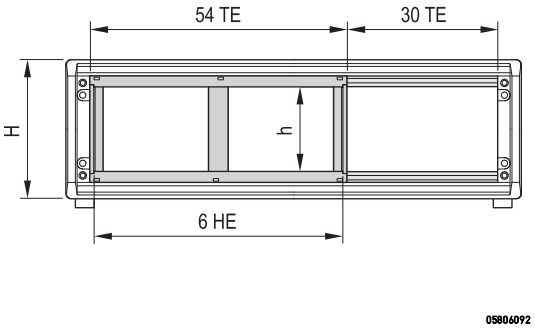

H = usable height (1 TE = 1 HP, 1 HE = 1 U)

Height U	Usable height h HP	Other dimensions and options Horizontal rail, front	Horizontal rail, rear	Horizontal board installation: Board cage	Front frame for EMC shielding	Front frame, unshielded
				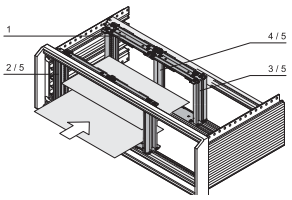 05806091 Struts die-cast zinc; horizontal rails front and rear; threaded insert, St, zinc-plated; fixing material kit; for horizontal mounting of double-height euroboards in 3 or 4 U high subracks/cases; 54 HP space required; **please order front front frame for EMC shielding separately**	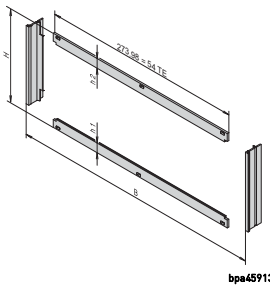 bpa45913 2 horizontal covers, Al 2.5 mm, front anodised, rear iridescent green chromated; 2 vertical trims, Al extrusion, clear passivated; stainless steel EMC gasket; front frame forms the contact between subrack and the sub-assemblies	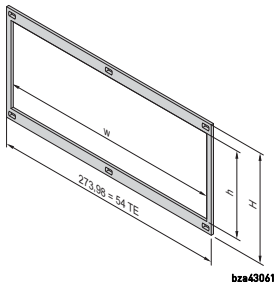 bza43061 Al, 2.5 mm, clear anodised; front frame with cut-out, clear internal width w = 266.35 mm
				PU 1 kit	PU 1 kit	1 piece
3	20			**24564-117**	**24564-109**	34564-108
3	20			**24564-118**	**24564-109**	34564-109
4	28			**24564-217**	**24564-209**	**34564-208**
Assembly tool, for mounting the EMC gasket (stainless steel)				–	**24560-270**	–

* For direct backplane mounting

Desk-top cases – compacPRO

Air baffle for slots

Order Information

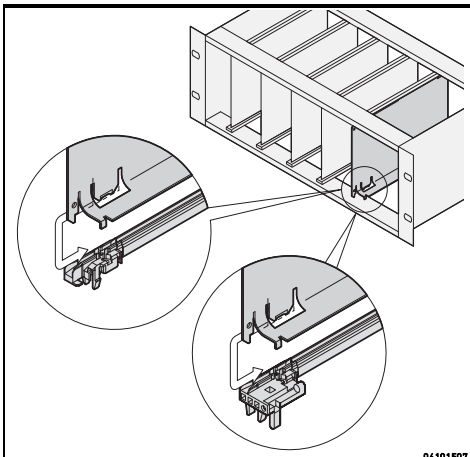

Air baffle without front panel

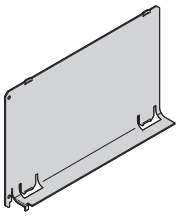

Al, 1 mm, incl. assembly kit; prevents an air short circuit in unoccupied slot positions; is pushed into the groove of the guide rails

Depth mm	Width HP	Height U	1 piece
160	4	3	**34562-823**
160	4	6	
160	8	3	**34562-833**
160	8	6	**34562-836**
160	12	3	**34562-843**
160	12	6	**34562-846**
220	4	3	**34562-824**
220	4	6	34562-827
220	8	3	34562-834
220	8	6	34562-837
220	12	3	34562-844
220	12	6	34562-847

Dimensions

Extruded side panel 2 U

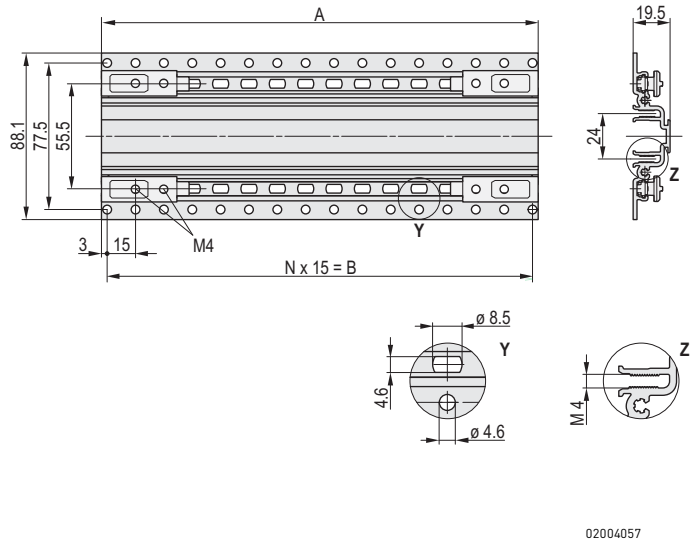

Extruded side panel 3 U

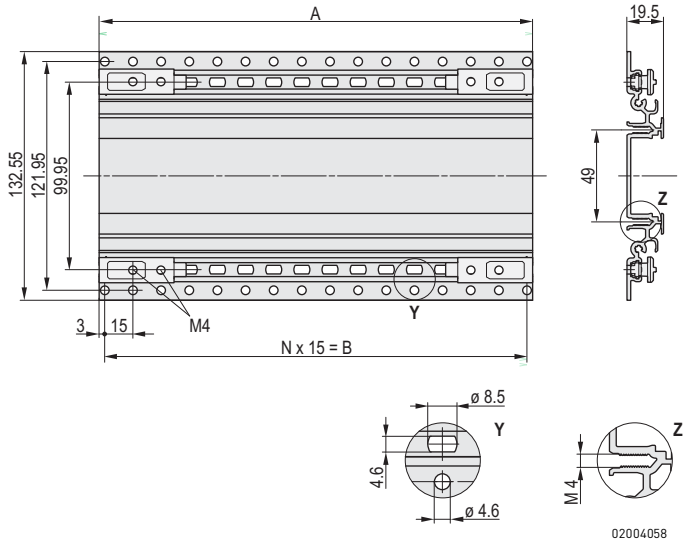

Extruded side panel 4 U

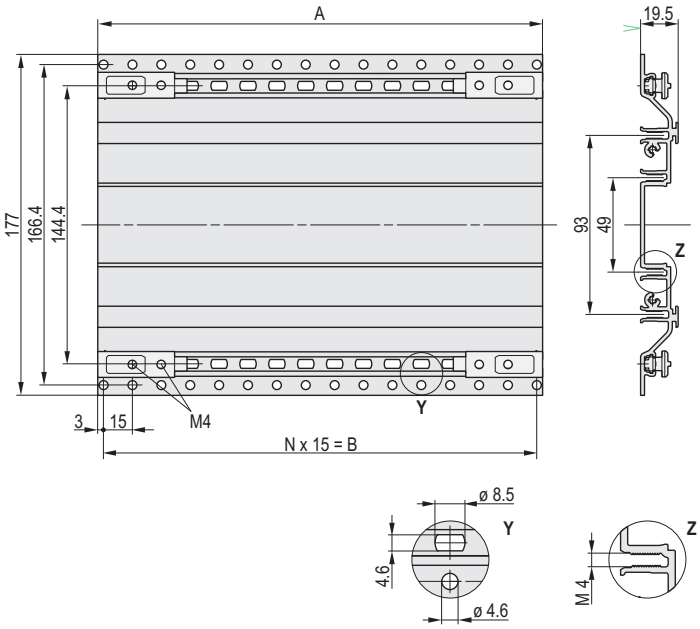

Extruded side panel 6 U

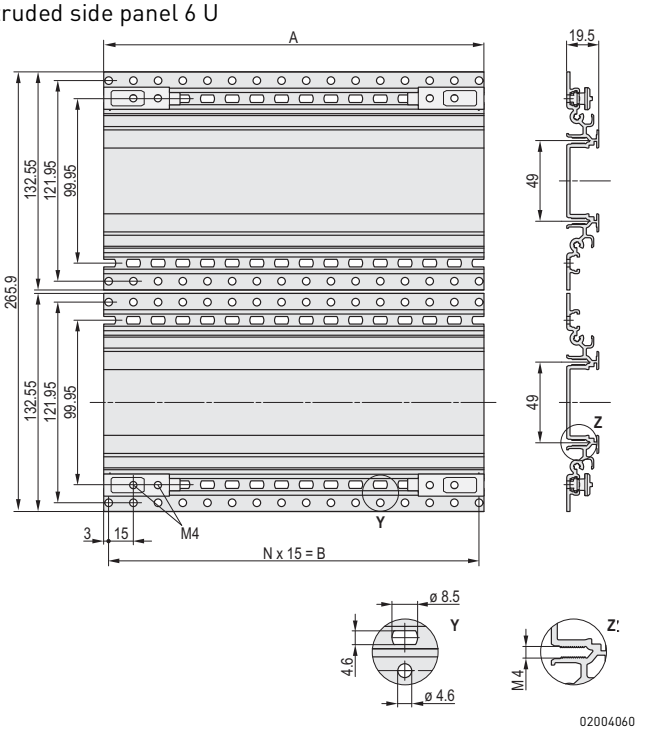

Dimensions

For case depth	Max. mounting depth	Dimensions	
mm	mm	A in mm	B in mm
271	250	231	15 15 = 225
331	310	291	19 15 = 285
391	370	351	23 15 = 345
451	430	411	27 15 = 405
511	490	471	31 15 = 465

Note

Side panel for 6 U case consists of two 3 U extruded side panels

Desk-top cases – compacPRO

Content

Cabinets 1

Wall mounted cases 2

Accessories for cabinets and wall mounted cases . 3

Climate control . 4

Electronics cases 5

Subracks/ 19" chassis 6

Front panels, plug-in units . . . 7

Systems 8

Power supply units 9

Backplanes . . . 10

Connectors, front panel component system 11

Appendix 12

Desk-top cases – comptec

02202003

Standards

- Internal dimensions in accordance with IEC 60297-3-100
- Type of protection IP 20 in accordance with IEC 60529
- Protective ground connections in accordance with:
  DIN EN 50178/VDE 0160
  DIN EN 60950/VDE 0805
  DIN EN 61010-1/VDE 0411 part 1
  DIN EN 61010-1A2/VDE 0411 part 1/A1

Desk-top cases – comptec

Overview 5.100

Case to accept 19" subracks or 19" chassis

- Internal assemblies of up to 40 kg
- Up to six rows of ventilation slots in the base plate for optimal air inlet
- High stability
- Front and rear identical, depth-symmetrical construction
- With handle strip or recessed grip

02202004

02202005

Case

- Al die-cast frame front and rear
- Top cover and base plate can be subsequently removed
- Top cover and base plate fitted with hidden GND/earth connections
- Case height 3, 4, 6, 7 and 9 U (cladding parts in steel)
- Case height 9 U and 12 U (cladding parts in aluminium)

30407004

ServicePLUS from page 5.4

e.g. modifications (cut-outs, special colours)
e.g. custom solutions (special sizes)

e.g. assembly service from 1 piece

www.schroff.biz/ServicePLUS

comptec
3, 4 U, St 5.102
6, 7, 9 U, St 5.103
9, 12 U, Al 5.104

Accessories
Folding handle ... 5.105
Slide rails 5.105
Earthing kit 5.106
Assembly kit 5.106
Tip-up feet 5.107

ServicePLUS ... 5.4

19" case, 3 U, 4 U

02202001

- Desk-top case (pre-fitted)
- Top cover, base plate and rear panel in steel
- Front and rear frames in die-cast Al
- Ventilation slits in base plate
- Ventilation gills in rear panel
- Side panel with integral handle function

Delivery comprises (kit)

Item	Qty	Description
1	1	Front frame, Al die-cast, RAL 7016, with 19" grid
2	1	Rear frame, Al die-cast, RAL 7016, with 19" grid
5	2	Side panel, Al extrusion, RAL 7016
7	1	Cover plate, Al, 1 mm, RAL 9006, with GND/earthing tag
8	1	Base plate, Al, 1 mm, RAL 9006, with GND/earthing tag
9	1	Rear panel, St, 1 mm, RAL 9006, with GND/earthing tag
10	4	Case foot with anti-slip protection, PC, black, UL 94 V-0
11	1	Assembly kit

Items 1, 2, 5 and 9 fitted.

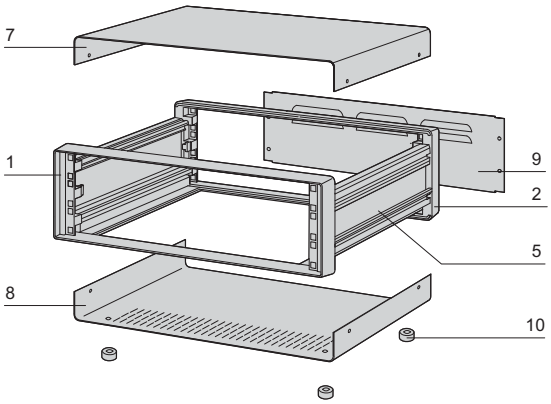

CTTP0001

Front view

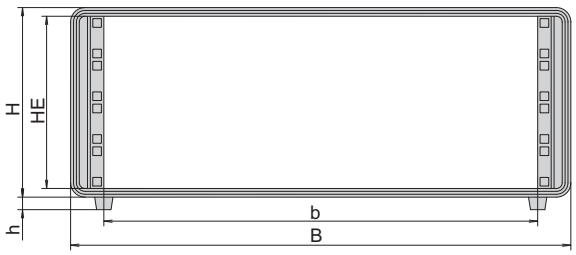

CTA30677

h = case foot height, HE = U, internal usable height

Side view

CTA42313

Usable width b = B - 69 mm, h = height of case foot

Order Information

Height H		h	Depth D	Usable depth d	Width B	Part no.
U	mm	mm	mm	mm	mm	
3	153	13.0	300	276	520	**10225-601**
3	153	13.0	400	376	520	**10225-612**
3	153	13.0	500	476	520	**10225-623**
4	198	13.0	300	276	520	**10225-602**
4	198	13.0	400	376	520	**10225-613**
4	198	13.0	500	476	520	**10225-624**

Note

- Please order GND/earthing kit separately, see page 5.106
- The case foot, item 10, can be replaced by a tip-up foot, see page. 5.107
- Please order slide rails separately, see page 5.105

ServicePLUS see page 5.4

Desk-top cases – comptec

19" case, 6 U, 7 U, 9U

02202002

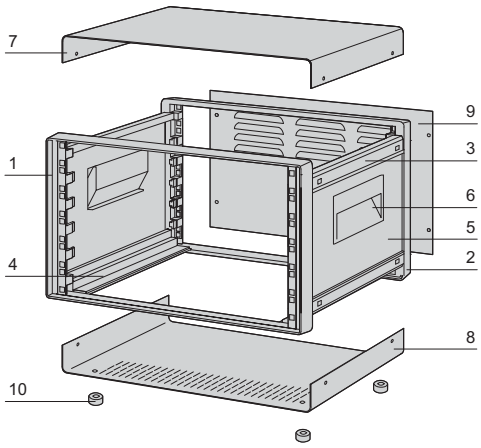

CTTP0002

Front view

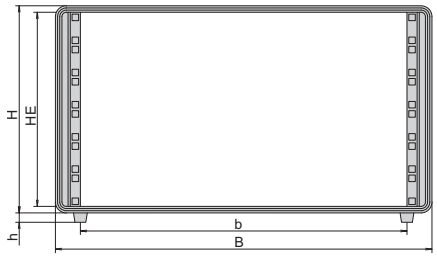

CTA30676

h = case foot height, HE = U, internal usable height

Side view

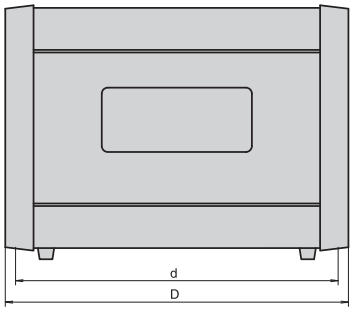

CTA42312

Usable depth d = D - 24 mm

- Desk-top case (pre-fitted)
- With handle shell
- Top cover, base plate and rear panel in steel
- Front and rear frames in die-cast Al
- Ventilation slits in rear panel and base

Delivery comprises (kit)

Item	Qty	Description
1	1	Front frame, Al die-cast, RAL 7016, with 19" grid
2	1	Rear frame, Al die-cast, RAL 7016, with 19" grid
3	2	Side profile at top, Al extrusion, RAL 7016
4	2	Side profile at bottom, Al extrusion, RAL 7016
5	2	Side panel, St, 1.5 mm, RAL 9006, with GND/earthing tag
6	2	Handle shell, PC, RAL 7016, UL 94 V-0, load-carrying capacity: 60 kg/pair
7	1	Cover plate, St, 1 mm, RAL 9006, with GND/earthing tag
8	1	Base plate, St, 1 mm, RAL 9006, with GND/earthing tag
9	1	Rear panel, St, 1 mm, RAL 9006, with GND/earthing tag
10	4	Case foot with anti-slip protection, PC, black, UL 94 V-0
11	1	Assembly kit

Items 1, 2, 3, 4, 5, 6 and 9 fitted.

Order Information

Height H		h	Depth D	Usable depth d	Width B	Part no.
U	mm	mm	mm	mm	mm	
6	286	13	300	276	520	**10225-604**
6	286	13	400	376	520	**10225-615**
6	286	13	500	476	520	**10225-626**
6	286	13	600	576	520	**10225-637**
7	331	13	400	376	520	**10225-616**
7	331	13	500	476	520	**10225-627**
7	331	13	600	576	520	**10225-638**
9	420	13	400	376	520	**10225-618**
9	420	13	500	476	520	**10225-629**
9	420	13	600	576	520	**10225-640**

Note

- Please order GND/earthing kit separately, see page 5.106
- The case foot, item 10, can be replaced by a tip-up foot, see page 5.107
- Please order slide rails separately, see page 5.105
- Handle shell, item 6, can be replaced by a folding handle, see page 5.105

ServicePLUS see page 5.4

19" cases 9 and 12 U, aluminium

02202006

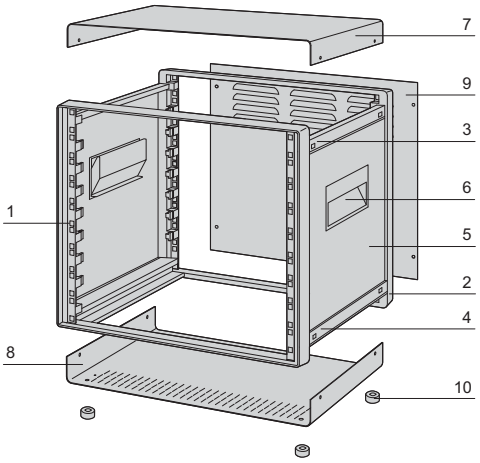

CTTP0003

- Desk-top case (pre-fitted)
- With handle shell
- Top cover, base plate and rear panel in Al
- Front and rear frames in die-cast Al
- Ventilation slots in base plate
- Air vents in rear panel

Delivery comprises (kit)

Item	Qty	Description
1	1	Front frame, Al die-cast, RAL 7016, with 19" grid
2	1	Rear frame, Al die-cast, RAL 7016, with 19" grid
3	2	Side profile at top, Al extrusion, RAL 7016
4	2	Side profile at bottom, Al extrusion, RAL 7016
5	2	Side panel, Al, 1.5 mm, RAL 9006, with GND/earthing tag
6	2	Handle shell, PC, RAL 7016, UL 94 V-0, load-carrying capacity: 60 kg/pair
7	1	Cover plate, Al, 1 mm, RAL 9006, with GND/earthing tag
8	1	Base plate, Al, 1 mm, RAL 9006, with GND/earthing tag
9	1	Rear panel, Al, 1 mm, RAL 9006, with GND/earthing tag
10	4	Case foot with anti-slip protection, PC, black, UL 94 V-0
11	1	Assembly kit

Items 1, 2, 3, 4, 5, 6 and 9 fitted.

Front view

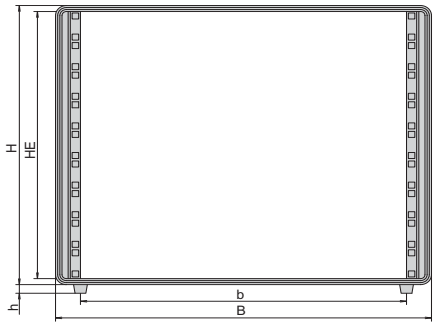

CTA30679

Usable width b = B - 69 mm, h = height of case foot

Side view

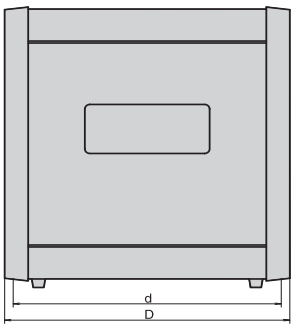

CTA42314

Usable depth d = D - 24 mm

Order Information

Height H		h	Depth D	Usable depth d	Width B	Part no.
U	mm	mm	mm	mm	mm	
9	420	13	400	376	520	**10225-667**
9	420	13	500	476	520	**10225-682**
9	420	13	600	576	520	**10225-693**
12	553	13	400	376	520	**10225-670**
12	553	13	500	476	520	**10225-685**
12	553	13	600	576	520	**10225-696**

Note

- Please order GND/earthing kit separately, see page 5.106
- The case foot, item 10, can be replaced by a tip-up foot, see page 5.107
- Please order slide rails separately, see page 5.105
- Handle shell, item 6, can be replaced by a folding handle, see page 5.105

ServicePLUS see page 5.4

Desk-top cases – comptec

Folding handle

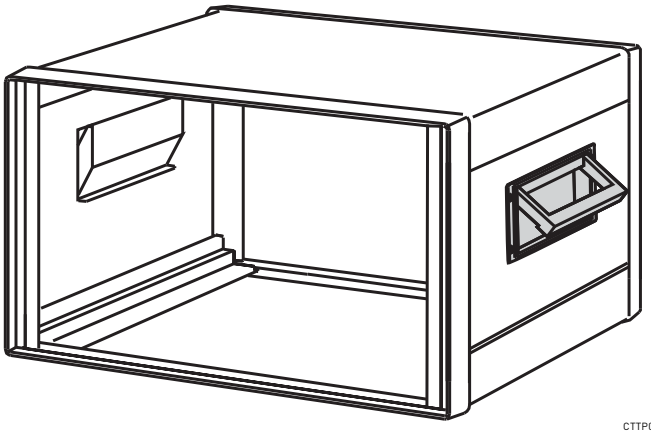

- Folding handles can be used instead of the pre-fitted handle shells
- Load-carrying capacity: 50 kg/pair

Delivery comprises (kit)

Item	Qty	Description
1	2	Folding handle, Al die-cast, RAL 7016
2	1	Assembly kit

Order Information

Description	Part no.
Folding handle	**20225-439**

Slide rails

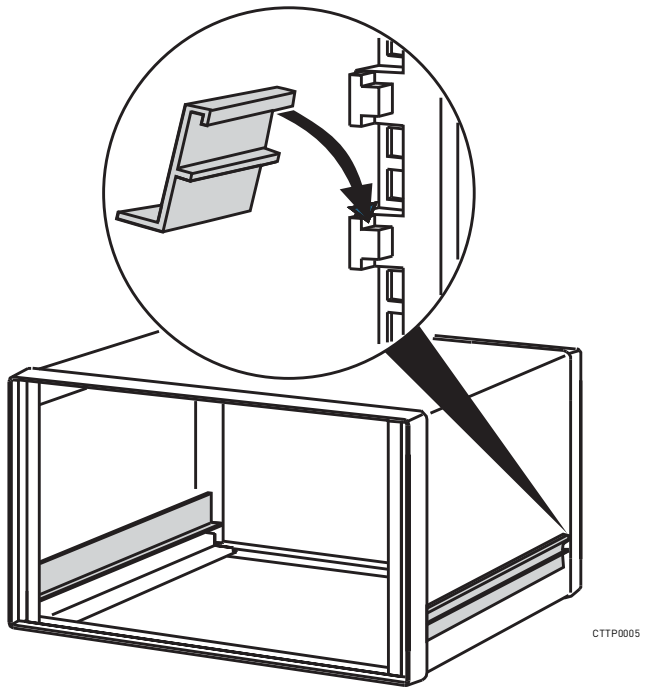

- Slide rails are suitable as support for 19" subracks and 19" chassis

Delivery comprises

Item	Qty	Description
1	1	Slide rail, Al extrusion, anodised, cut edges plain, static load-carrying capacity 10 kg

Order Information

For case depth mm	Part no.
300	**30225-089**
400	**30225-090**
500	**30225-091**
600	**30225-092**

Note

- 2 slide rails are required per subrack or 19" chassis
- Slide rail cannot be used for shielded 19" subracks; special slide rails available on request

GND/earthing kit

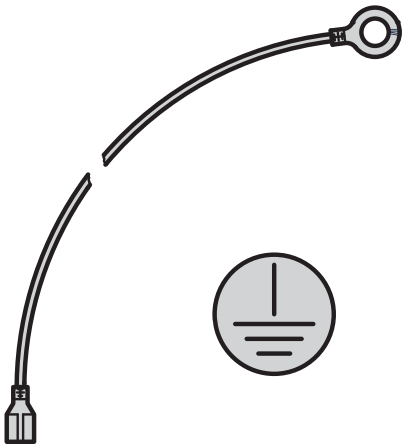

aza43284

- The GND/earthing kit allows VDE compliant earthing of cases in accordance with:
  EN 50178/VDE 0160
  EN 60950/VDE 0805
  EN 61010-1/VDE 0411 part 1
  EN 61010-1A2/VDE 0411 part 1/A
- VDE tested

Delivery comprises (kit)

Item	Qty	Description
1	1	GND/earthing kit, Cu wire, 1.5 mm^2, PVC sheathing, green/yellow, connects side panels, cover, base plate and rear panel

Order Information

Description	Up to 4 U Part no.	bigger than 4 U Part no.
GND/earthing kit for cases with steel covers	21100-490	21100-448
GND/earthing kit for cases with aluminium covers	–	21100-347

19" fixing

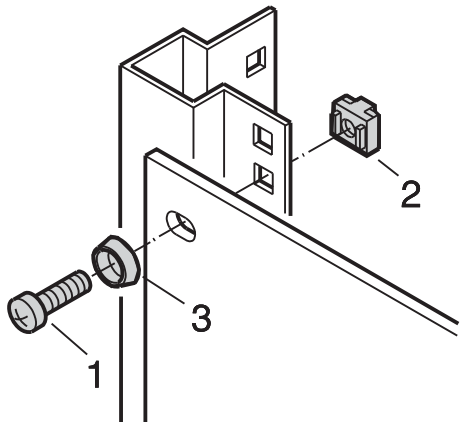

SC128XXX

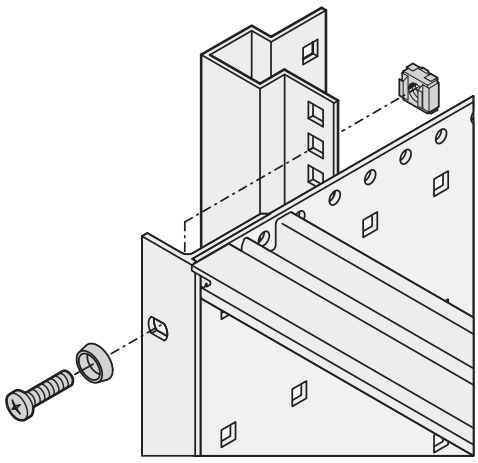

06108055

- For fitting subracks or 19" chassis in a comptec case
- For fixing 19" front panels

Delivery comprises

Item	Description
1	Screw M6 × 16, zinc-plated with Pozidrive
2	Cage nut M6, zinc-plated
3	Plastic washer, ABS, black

Order Information

Description	Part no.
PU = 8 × screw, washer, nut	21100-435
PU = 50 each of M6 screw, washer and cage nut	21101-809
PU = 100 each of M6 screw, washer and cage nut	21101-810

Desk-top cases – comptec

Plastic tip-up feet

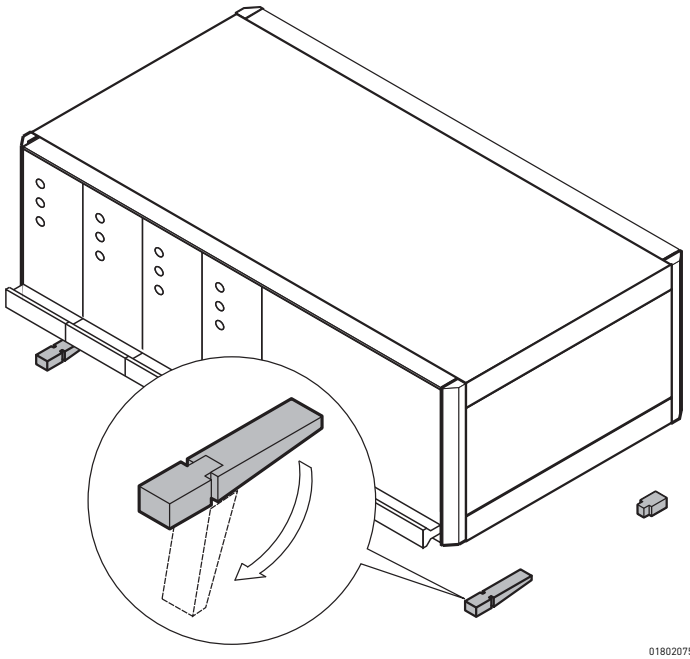

- Static load-carrying capacity 25 kg per foot
- Tip-up feet can be used instead of the case feet fitted as standard
- Fixing holes provided in bottom of case

Delivery comprises (kit)

Item	Qty	Description
1	4	Foot, PA, UL 94 V-0
2	4	Anti-slip protection, TPE
3	2	Tip-up device, PA, UL 94 V-0
4	1	Assembly kit

Order Information

Description	RAL 7016 anthracite Part no.	RAL 9006 silver Part no.
Plastic tip-up foot	**20603-002**	**20603-001**

Tip-up foot in die-cast Al

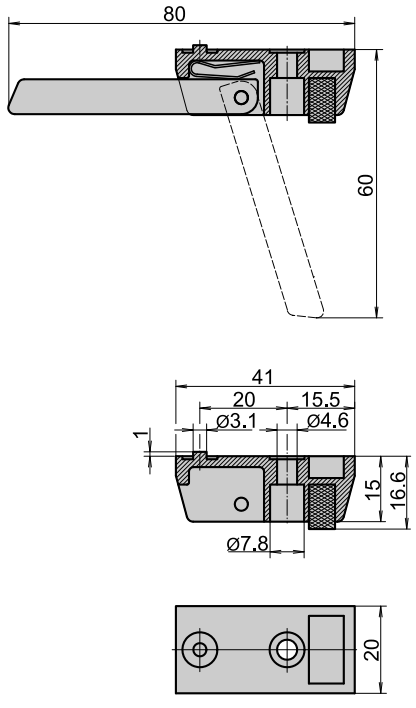

- Static load-carrying capacity 50 kg per foot
- Tip-up feet can be used instead of the case feet fitted as standard
- Fixing holes provided in bottom of case

Order Information

Description	Qty	Part no.
Foot with tip-up, Al die-cast, silver	1 piece (SPQ 10)[1)]	**10603-002**
Foot without tip-up, Al die-cast, silver	1 piece (SPQ 10)[1)]	**10603-001**
Cheesehead screw with slot M4 × 12, St, zinc-plated, PU 100 pieces		**21101-211**
Hexagon nut M4, St, zinc-plated, PU 100 pieces		**21100-211**
Spring washer A4, St, zinc-plated, PU 100 pieces		**21100-207**

1) Part no. comprises 1 piece;
delivery is in standard pack quantity (SPQ):
please order a minimum of 10 feet or a multiple

Desk-top cases – Accessories

Contents

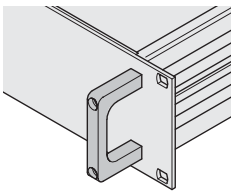

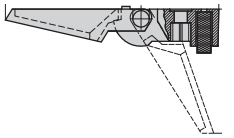

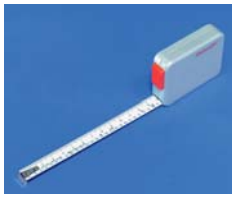

- Front handles see page 5.108
- Strap handles see page 5.111
- Tip-up carrying handles, see page 5.112
- Folding handles see page 5.113
- Tray handle see page 5.114
- Feet, see page 5.115
- Screwdriver (Torx) 5.117
- Measuring tape, see page 5.117

Front handle, one-piece, width 7 mm

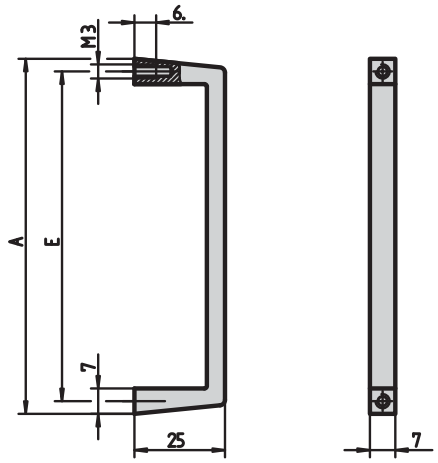

- Static load-carrying capacity 10 kg/pair
- Bolted from rear

Delivery comprises (kit)

Item	Qty	Description
1	1	Front handle, Al extrusion, anodised

Order Information

A mm	E mm	Part no.
48	40	**10501-001**
98	90	**10501-002**

Delivery is exclusively in Standard Pack Quantity (SPQ):
Please order at least 10 pieces or a multiple.
Pricing is per individual item.

Front handle, one-piece, width 9 mm

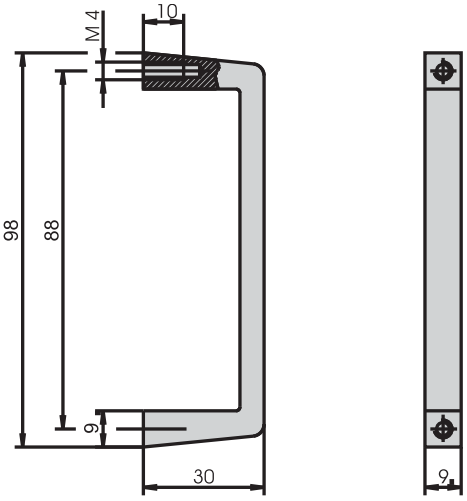

- Static load-carrying capacity 30 kg/pair
- Bolted from rear

Delivery comprises (kit)

Item	Qty	Description
1	1	Front handle, Al extrusion, anodised

Order Information

Description	Part no.
Front handle	**10501-003**
Pozidrive countersunk screw 14 × 10, zinc-plated, PU 100 pieces	**21101-381**

Delivery is exclusively in Standard Pack Quantity (SPQ):
Please order at least 10 front handles or a multiple.
Pricing is per individual item.

Desk-top cases – Accessories

Front handle, one-piece, width 10 mm

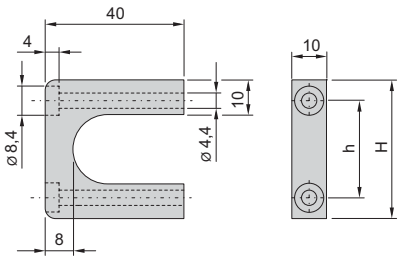

02905050

H = 1 U

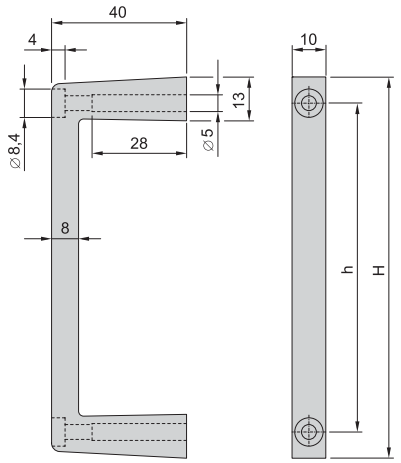

02905051

H ⩾ 2 U

- Static load-carrying capacity 30 kg/pair
- Bolted from front

Delivery comprises (kit)

Item	Qty	Description
1	2	Front handle, Al extrusion, anodised
2	1	Assembly kit

Order Information

Height H U	Height H mm	Height h mm	Part no.
1	40	28	**20860-256**
2	69	53	**20860-257**
3	113	97.5	**20860-258**
4	157.45	141.9	**20860-259**
5	201.9	186.4	**20860-260**

Front handle, one-piece, width 12.2 mm

1 U

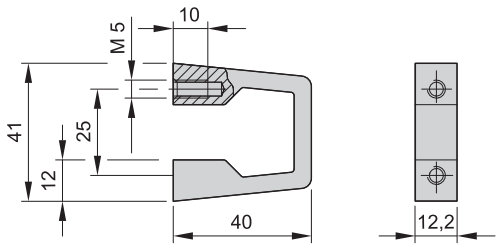

BZA42316

2 U ... 6 U

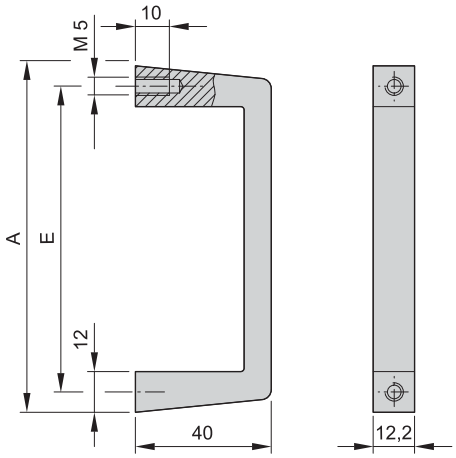

BZA42327

- Static load-carrying capacity 30 kg/pair
- Bolted from rear

Delivery comprises

Item	Qty	Description
1	1	Front handle, Al extrusion, anodised

Order Information

A mm	E mm	clear anodised Part no.	black anodised Part no.
41	25	**10501-116**	–
57.5	44.5	**10501-016**	–
69	55	**10501-004**	**10501-025**
102	88	**10501-005**	**10501-026**
132	120	**10501-006**	**10501-027**
146.4	133.4	**10501-018**	–
194	180	**10501-007**	**10501-028**
249	235	**10501-008**	**10501-029**
Panhead pozidrive screw self-locking, M5 × 12, zinc-plated, PU 100 pieces			**21100-788**
Torx countersunk screw M5 × 12, zinc-plated, 100 pieces			**24560-183**

Delivery is exclusively in Standard Pack Quantity (SPQ):
Please order at least 10 front handles or a multiple. Pricing is per individual item.

Note

- Please order panhead screws separately

Desk-top cases – Accessories

Front handle, multi-piece, width 12 mm

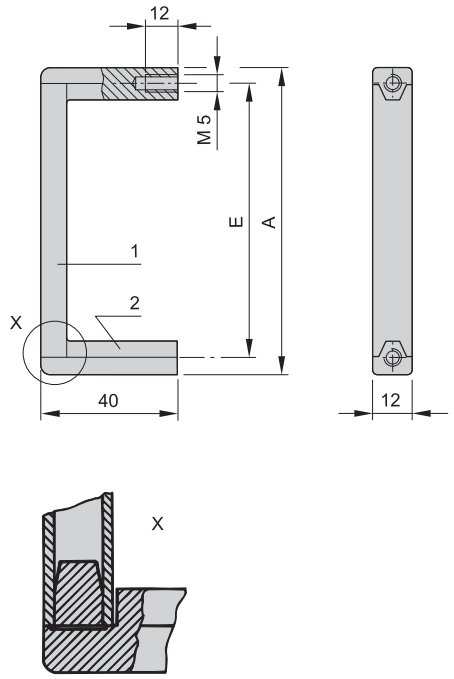

A3-227

- Static load-carrying capacity 10 kg/pair
- In three parts, middle section in Al extrusion, end pieces in glass fibre reinforced plastic
- Bolts on from front

Delivery comprises (kit)

Item	Qty	Description
1	1	Front handle, Al extrusion, anodised
2	2	End piece, PA, black

Order Information

A mm	E mm	Part no.
87.5	73.5	**10502-050**
102.0	88	**10502-057**
134.0	120	**10502-059**
194.0	180	**10502-063**
249	235	**10502-065**
Panhead screw pozidrive self-locking, M5 × 12, zinc-plated, PU 100 pieces		**21100-788**

Delivery is exclusively in Standard Pack Quantity (SPQ):
Please order at least 10 front handles or a multiple.
Pricing is per individual item.

Note

- Please order panhead screws separately

Front handle, multi-piece, width 12 mm

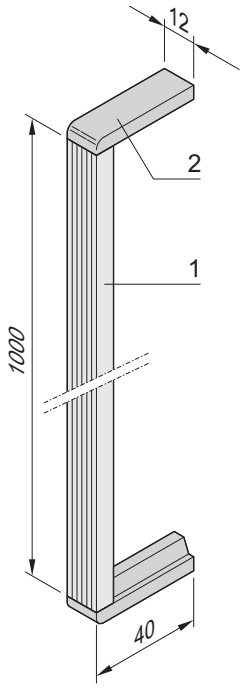

02908050

Order Information

Description	Qty/PU	Part no.
Item 1, front handle, Al extrusion, anodised,1 m long	1	**30502-051**
Item 2, end piece, PA, black, 2 pieces each required	1	**60502-003**
Panhead pozidrive screw self-locking, M5 × 12, zinc-plated, PU 100 pieces		**21100-788**

Item 1: front handle; item 2: end piece

Desk-top cases – Accessories

Strap handle, width 25 mm

05895003

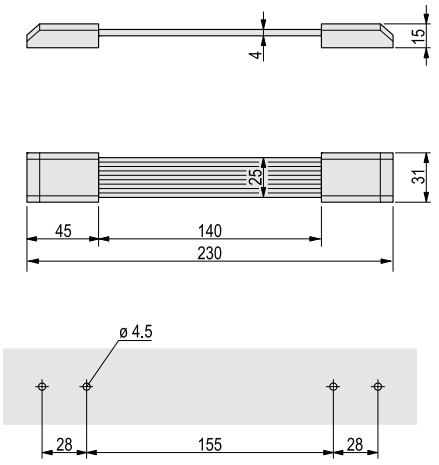

02902050

■ Static load-carrying capacity 20 kg

Delivery comprises (kit)

Item	Qty	Description
1	1	Band, spring steel, handle, flexible plastic, grey, RAL 7016
2	2	Cover, grey, RAL 7016
3	1	Assembly kit

Order Information

Length mm	Part no.
230	**20850-249**

Strap handle, width 22 mm

02992006

Length 240 mm/170 mm

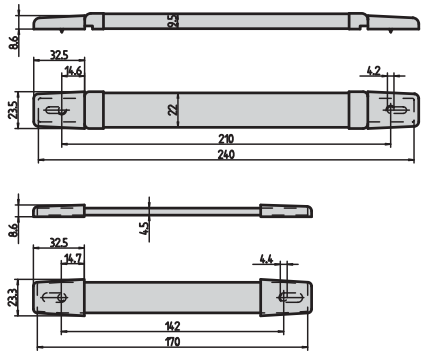

BZA42368

■ Static load-carrying capacity 20 kg

Delivery comprises (kit)

Item	Qty	Description
1	1	Band, spring steel, plastic-coated, black
2	2	Cover cap, St, chrome-plated
3	1	Assembly kit

Order Information

Length mm	Part no.
170	**10504-002**
240	**10504-003**

Desk-top cases – Accessories

Tip-up carrying handle in separate parts

02992002

02992001

- Static load-carrying capacity 25 kg (with handle bars of 450 mm length)

Lateral handle parts

02992002

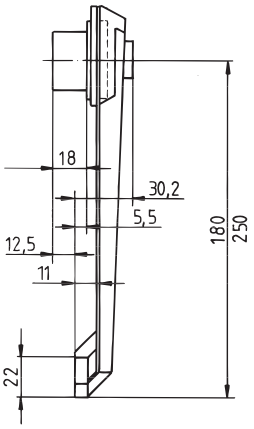

A4-2361

- Handle can be adjusted in 30° grid by pressing button

Delivery comprises (kit)

Item	Qty	Description
1	2	Lateral parts, die-cast zinc, painted (chrome decor)
2	2	Safety inserts, St, 1.5 mm, black
3	2	Adaptor/locking brackets
4	1	Assembly kit

Order Information

Length mm	Part no.
180	10502-297
250	10502-296

Handle bar

02992001

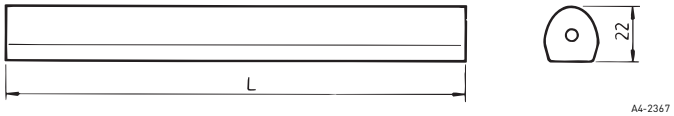

A4-2367

Delivery comprises (kit)

Item	Qty	Description
1	1	Handle bar, Al, black anodised

Order Information

Length mm	Part no.
1000	30502-191

Desk-top cases – Accessories

Folding metal handle

02992004

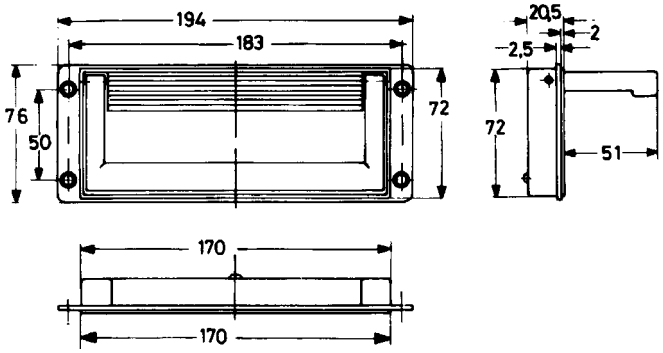

A4-2369

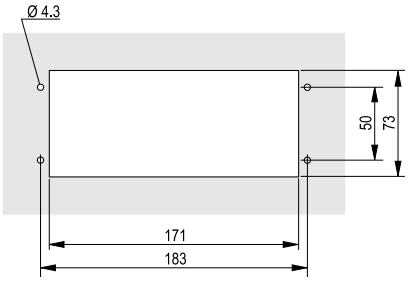

A4-2370

- Static load-carrying capacity 30 kg/pair
- For case ingress protection to IP 40
- Locks in folded and opened positions
- Equal cut-out for fitting in front of or behind case wall

Delivery comprises (kit)

Item	Qty	Description
1	1	Handle, Al die-cast, RAL 9005, black
2	1	Handle shell, Al die-cast, RAL 9006, silver

Order Information

Description	Part no.
Folding metal handle	**20505-032**

Delivery is exclusively in Standard Pack Quantity (SPQ): Please order at least 10 pieces or a multiple. Pricing is per individual item.

Folding plastic handle

02992005

Folding plastic handle

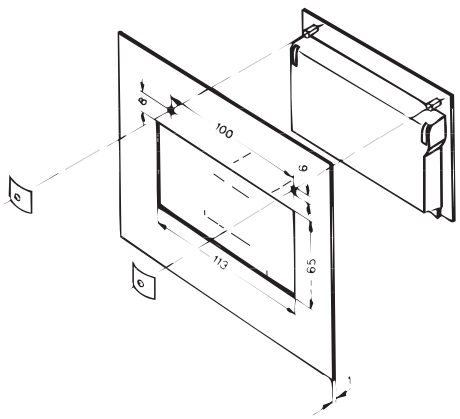

A2-123

- Static load-carrying capacity 20 kg/pair
- For case ingress protection to IP 40
- Locks in folded and opened positions
- External mounting only

Delivery comprises (kit)

Item	Qty	Description
1	1	Handle, PA, light grey
2	1	Handle shell, PA, dark grey
3	1	Assembly kit

Order Information

Description	Part no.
Folding plastic handle	**10505-014**

Delivery is exclusively in Standard Pack Quantity (SPQ): Please order at least 10 pieces or a multiple. Pricing is per individual item.

Desk-top cases – Accessories

Tray handle

02992003

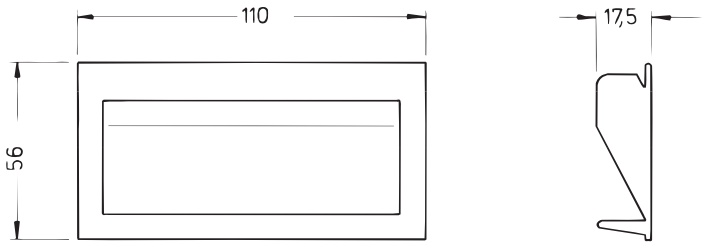

Size 1, case cut-out 49 × 104 mm

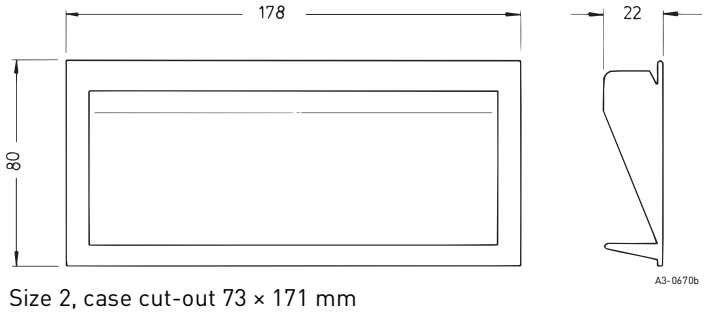

Size 2, case cut-out 73 × 171 mm

- Static load-carrying capacity 30 kg/pair

Delivery comprises

Item	Qty	Description
1	1	Handle shell, PC, UL 94 V-0

Order Information

Colour	Size 1 for material thickness 1.5 mm Part no.	Size 2 for material thickness 1.5 mm Part no.
black	**60229-004**	**60225-012**
Spring clip PU 20 pieces		**21100-089**
Spring clip PU 100 pieces		**21100-093**

Delivery is exclusively in Standard Pack Quantity (SPQ):
Please order a minimum of 10 tray handles or a multiple.
Pricing is per individual item.

Note

- Please order spring clips for fixing to the case separately
  Required:
  - for handle size 1: 2 spring clips
  - for handle size 2: 3 spring clips

Desk-top cases – Accessories

Plastic foot

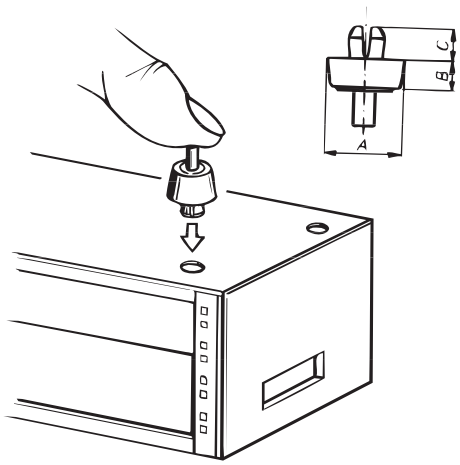

A4-330

Delivery comprises

Pos.	Menge	Beschreibung
1	1	Plastic foot, PC, UL 94 V-0, black

Order Information

Description	Dimensions A mm	B mm	C mm	Hole diameter mm	Part no.
For material thickness 1 ... 3	16	7.2	4	7	**60224-009**
For material thickness 1.5 ... 3	21	15	7	7.7	**60224-011**

Delivery is exclusively in Standard Pack Quantity (SPQ):
Please order at least 50 pieces or a multiple. Pricing is per individual item.

Note

- Foot is inserted into mounting hole and then fixed by pressing in the expanding pin

Rubber foot

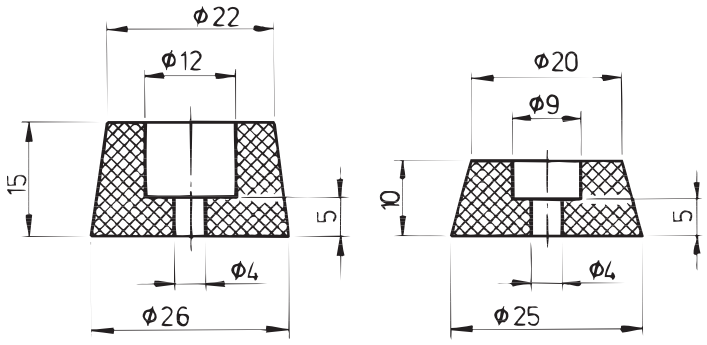

A4-2315

Order Information

Dimensions Height mm	Hole diameter mm	Material	Colour	Qty	Part no.
10	25	Rubber	grey	1	**60200-001**
15	26	Rubber	grey	1	**60200-027**

Delivery is exclusively in Standard Pack Quantity (SPQ):
Please order at least 50 pieces or a multiple. Pricing is per individual item.

Desk-top cases – Accessories

Plastic tip-up foot

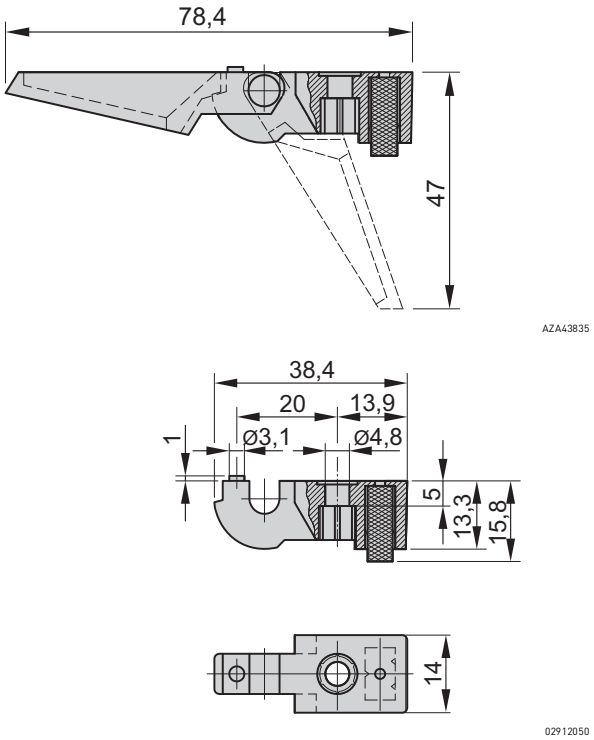

- Static load-carrying capacity 25 kg per foot
- Can be used instead of standard feet
- Fixing holes provided in bottom of case

Order Information

Description	Qty/PU	grey Part no.	black Part no.
Foot with tip-up, PA, UL 94 HB	1	**10603-023**	**10603-025**
Foot without tip-up, PA, UL 94 HB	1	**10603-024**	**10603-026**
Pozidrive flathead screw M4 × 10, St, zinc-plated, PU 100 pieces			**21100-513**
Hexagon nut M4, St, zinc-plated, PU 100 pieces			**21100-211**
Spring washer A4, St, zinc-plated, PU 100 pieces			**21100-207**

Delivery is exclusively in Standard Pack Quantity (SPQ):
Please order a minimum of 10 feet or a multiple.
Pricing is per individual item.

Note

- Please order assembly kit separately.

Plastic tip-up feet

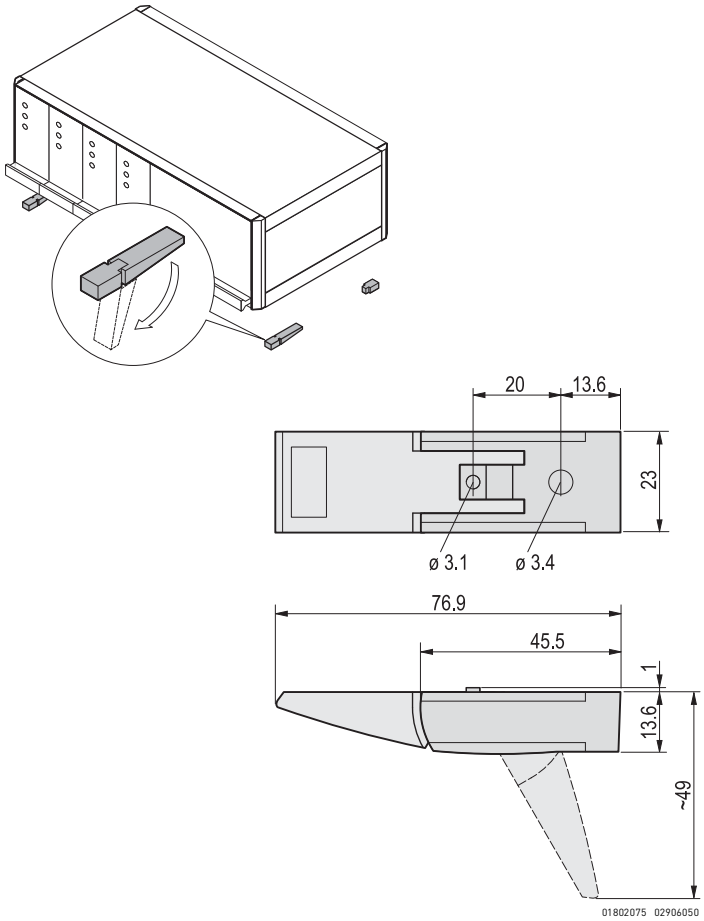

- Static load-carrying capacity 25 kg per foot
- Can be used instead of standard feet
- Fixing holes provided in bottom of case

Delivery comprises (kit)

Item	Qty	Description
1	4	Foot, PA, UL 94 V-0
2	4	Anti-slip protection, TPE
3	2	Tip-up device, PA, UL 94 V-0
4	1	Assembly kit

Order Information

Description	RAL 7016 anthracite Part no.	RAL 9006 silver Part no.
Plastic tip-up foot	**20603-002**	**20603-001**

Desk-top cases – Accessories

Al die-cast tip-up foot

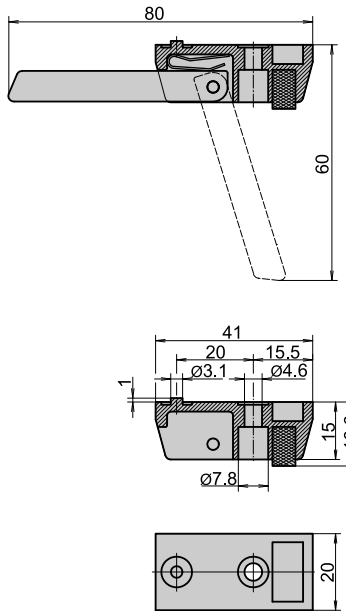

AZA43836

- Static load-carrying capacity 50 kg per foot
- Can be used instead of standard feet
- Fixing holes provided in bottom of case

Order Information

Description	Qty	Part no.
Foot without tip-up, Al die-cast, silver	1 piece (SPQ 10)[1)]	**10603-001**
Foot with tip-up, Al die-cast, silver	1 piece (SPQ 10)[1)]	**10603-002**
Accessories		
Cheesehead screw with slot M4 × 12, St, zinc-plated, PU 100 pieces		**21101-211**
Hexagon nut M4, St, zinc-plated, PU 100 pieces		**21100-211**
Spring washer A4, St, zinc-plated, PU 100 pieces		**21100-207**

1) Delivery is exclusively in Standard Pack Quantity (SPQ): Please order at least 10 pieces or a multiple. Pricing is per individual item.

Screwdriver

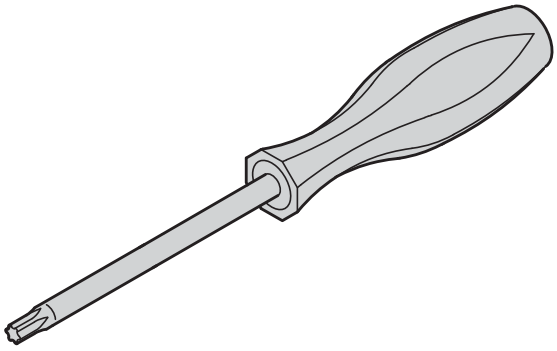

AZA45925

- T8: For mounting guide rails to horizontal rails
- T20: For mounting horizontal rails and rear hoods to side panels, cover plates, support brackets and front handles

Order Information

Torx screwdriver	Qty/PU pieces	Part no.
M2.5 T 8 Torx	1	**64560-026**
M4 T 20 Torx	1	**64560-027**

Measuring tape

32506001

- Measuring tape with cm, U-, HP-division (lenght 2 m)
- Plastic cases, metal measuring tape with automatic collection

Order Information

Description	Qty/PU	Part no.
Measuring tape	1	**89009-001**

Small Form Factor Cases – Interscale

Interscale passive or convection cooled

02613002

02613014

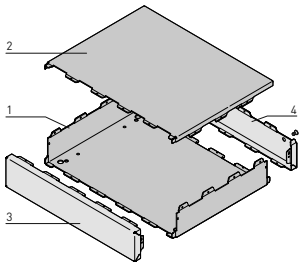

02613050

Plain case

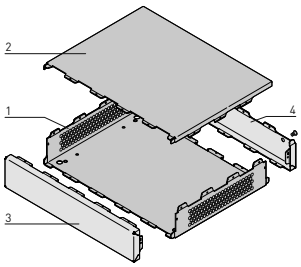

02613051

Perforated case

- Available plain or perforated for forced cooling with fans
- Modular case consisting of 4 easy to assemble parts
- Integrated EMC protection
- Ingress protection IP 30 (plain version)
- Color RAL 7016
- Small form factor or 19" rack mount
- Rigid construction only requires two screws
- Other dimensions, cutout shapes or locations, and screen printing available

Delivery includes (assembled)

Item	Qty	Description
1	1	Base with 2 side panels (plain or perforated), St, 1 mm, AlZn coated, RAL 7016 (anthracite gray); 19"-angle, 1,5 mm St, AlZn coated, RAL 7016 (only on 19" version case)
2	1	Top cover, Al, 1 mm, RAL 7016
3	1	Front panel, Al, 1 mm, RAL 7016
4	1	Rear panel, Al, 1 mm, RAL 7016
5	1	User manual

Order Information

Desktop cases

Height		Width	Depth	Desktop case plain	Desktop case perforated
U	mm	mm	mm	Part no.	Part no.
1	43.65	132.55	132.55	**14820-133**	–
1	43.65	132.55	177.00	**14820-134**	–
1	43.65	221.45	177.00	**14820-154**	**14825-154**
1	43.65	221.45	221.45	**14820-155**	**14825-155**
1	43.65	310.35	221.45	**14820-175**	**14825-175**
1	43.65	399.25	221.45	**14820-195**	**14825-195**
1	43.65	399.25	310.35	**14820-197**	**14825-197**
2	88.10	221.45	177.00	**14820-254**	**14825-254**
2	88.10	221.45	221.45	**14820-255**	**14825-255**
2	88.10	310.35	221.45	**14820-275**	**14825-275**
2	88.10	399.25	221.45	**14820-295**	**14825-295**
2	88.10	399.25	310.35	**14820-297**	**14825-297**
3	132.55	310.35	221.45	**14820-375**	**14825-375**
3	132.55	399.25	221.45	**14820-395**	**14825-395**
3	132.55	399.25	310.35	**14820-397**	**14825-397**

19" cases

Height		Width	Depth	19" case plain	19" case perforated
U	mm	mm	mm	Part no.	Part no.
1	43.65	443.70	221.45	**14821-105**	**14826-105**
1	43.65	443.70	310.35	**14821-107**	**14826-107**
2	88.10	443.70	221.45	**14821-205**	**14826-205**
2	88.10	443.70	310.35	**14821-207**	**14826-207**
3	132.55	443.70	221.45	**14821-305**	**14826-305**
3	132.55	443.70	310.35	**14821-307**	**14826-307**

Accessories

Fan mount with fans, 80 mm height	Page 5.124	Stacking aid	Page 5.130
Clip for horizontal rail mounting	Page 5.129	Rubber feet	Page 5.130
Wall or Desktop mounting bracket	Page 5.129	Plastic feet	Page 5.131
Plastic tip-up feet	Page 5.130	Assembly tool	Page 5.131

Small Form Factor Cases – Interscale

Interscalefor Embedded NUC

02615019

- Perforated side panels for passive cooling (convection)
- Compliant with the SDT.03 embeddedNUC standard http://www.sget.org/standards.html
- Modular case consisting of 3 easy to assemble parts; body, top cover and front panel
- Rigid construction requires only two screws
- Board mounting studs installed
- Integrated EMC protection
- Color RAL 7016
- Max. heat dissipation without fan about 8 Watt
- Cutouts specific for IES (http://en.ies.de/) MB95 embedded NUC board
- Other dimensions, cutout shapes or locations and screen printing available

Delivery includes (assembled)

Item	Qty	Description
1	1	Base with 2 side panels (perforated) and rear panel, Al, 1 mm, RAL 7016 (anthracite gray)
2	1	Top cover, Al, 1 mm, RAL 7016
3	1	Front panel, Al, 1 mm, RAL 7016
4	4	Pre-installed studs with M2.5 Torx T8 screws for board mounting
5	1	User manual

Order Information

Height mm	Width mm	Depth mm	Part no.
34.00	112.00	106.50	14820-701
Accessories			
Horizontal rail mounting bracket			**Page 5.129**
Wall or Desktop mounting bracket			**Page 5.129**
Rubber feet			**Page 5.130**
Assembly tool			**Page 5.131**
Screwdriver			**Page 5.131**

Note

- Only the listed Interscale accessories are compatible

Fan mount with fans, 80 mm height

02617001

1 fan

02617002

2 fans

- Fan mount for installation in the Interscale

Delivery includes (assembled)

Item	Qty.	Description
1a	1	Fan mount (1 fan), height 83 mm, width 83 mm
1b	1	Fan mount (2 fans), height 83 mm, width 165 mm
2a	1	Fan, 80 mm height, 80 mm width, 25.4 mm depth
2b	2	Fan, 80 mm height, 80 mm width, 25.4 mm depth
3	1	Mounting material 4 x M3x6 countersunk screw
4	1	Fan attachment (with cord)

Order Information

Description	Qty/PU piece	Qty	Part no.
1 fan	1	PU 1 kit	**24830-101**
2 fans	1	PU 1 kit	**24830-102**

Technical data of one fan

Voltage [VDC]	12
Dimensions H x W x D (mm)	80 x 80 x 25.4
Air capacity (free blowing) [m^3/h]	109.44
Noise level [dB (A)]	44.62
Max. stat. pressure [Pa]	95.41
Max. ambient temperatures [°C]	70

Small Form Factor Cases – Interscale

Interscale for embedded NUC, conduction cooled

02615021

Application: Case with connectors

02615009

Application: Case with connectors

- Integrated heat sink on top cover with 5 mm heat fins
- Compliant with the SDT.03 embeddedNUC standard http://www.sget.org/standards.html
- Modular case consisting of 3 easy to assemble parts; body, top cover and front panel
- Rigid construction requires only two screws
- Board mounting studs installed
- Integrated EMC protection
- Color RAL 7016
- Cutouts specific for IES (http://en.ies.de/) MB95 embedded NUC board
- Other dimensions, cutout shapes or locations, and screen printing available

Standardization Group for Embedded Technologies SGeT Member

Delivery includes (assembled)

Item	Qty	Description
1	1	Base with 2 side panels and rear panel, Al, 1 mm, RAL 7016 (anthracite gray)
2	1	Top cover with integrated heat sink, Al, 1 mm, RAL 7016
3	1	Front panel, Al, 1 mm, RAL 7016
4	4	Pre-installed M2.5 studs with Torx T8 screws for board mounting
5	1	User manual

Order Information

Height mm	Width mm	Depth mm	Part no.
43.65	112.00	106.50	14830-002

Accessories	
Flexible Heat Conductor (FHC), 20 mm	**Page 5.127**
Aesthetic Design Elements	**Page 5.127**
Rubber feet	**Page 5.130**
Assembly tool	**Page 5.131**
Screwdriver	**Page 5.131**

Note

- Only the listed Interscale accessories are compatible

Small Form Factor Cases – Interscale

Interscale for Mini-ITX, conduction cooled

02615011

Application: Case with connectors

02615010

Application: Case with connectors

- Integrated heat sink on top cover with 10 mm or 20 mm heat fins
- Modular case consisting of 3 easy to assemble parts; body, top cover and front panel
- Rigid construction requires only four screws
- Board mounting studs installed
- Integrated EMC protection
- Color RAL 7016
- Cutout for Mini ITX I/O panel, power connector (Phoenix Contact, 0710028) and power switch (Schurter, MCS 18 Front)
- Other dimensions, cutout shapes or locations, and screen printing available

Delivery includes (assembled)

Item	Qty	Description
1	1	Base with 2 side panels and rear panel, Al, 1 mm, RAL 7016 (anthracite gray)
2	1	Top cover with integrated heat sink, Al, 1 mm, RAL 7016
3	1	Front panel, Al, 1 mm, RAL 7016
4	4	Pre-installed M2.5 studs with Torx T8 screws for board mounting
5	1	User manual

Order Information

Height	Width	Depth	With 10 mm fins	With 20 mm fins
mm	mm	mm	Part no.	Part no.
94.00	184.00	189.00	14830-005	**14830-006**
Accessories				
Flexible Heat Conductor (FHC), 70 mm				**Page 5.128**
Aesthetic Design Elements				**Page 5.127**
Horizontal rail mounting bracket				**Page 5.129**
Wall or Desktop mounting bracket				**Page 5.129**
Plastic tip-up feet				**Page 5.130**
Rubber feet				**Page 5.130**
Assembly tool				**Page 5.131**
Screwdriver				**Page 5.131**

Note

- Only the listed Interscale accessories are compatible

Small Form Factor Cases – Interscale Accessories

Aesthetic Design Elements for conduction cooled

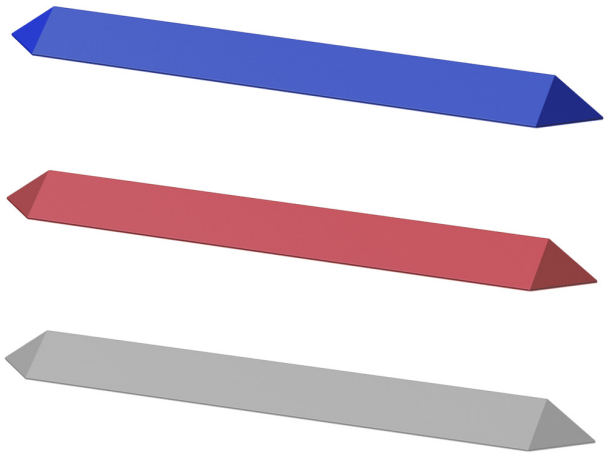

- Designs created to compliment the various heat fin heights
- Compatible with all Interscale C enclosures

Delivery includes

Item	Qty	Description
1	2	Aesthetic design element, Al

Order Information

	For case width mm	Colour, finish	Heat fin height 5 mm Part no.	10 mm Part no.	20 mm Part no.
For embedded NUC case	112	Blue (RAL 5010)	24830-010	–	–
	112	Red (RAL 3027)	24830-011	–	–
	112	Siver (RAL 9006)	24830-012	–	–
For Mini-ITX case	184	Blue (RAL 5010)	–	24830-013	24830-016
	184	Red (RAL 3027)	–	24830-014	24830-017
	184	Silver (RAL 9006)	–	24830-015	24830-018

Flexible Heat Conductor (FHC), 20 mm

- Patent pending conduction cooling solution for small form factor electronics
- Conductor block expands/contracts vertically to compensate for tolerance stack up and optimizes surface contact and pressure along the thermal path; eliminates the need for a thermal gap pad
- Provides industry leading conduction cooling performance, 10 % improvement over current conduction cooling methods
- Designed for Intel, AMD, Via, Freescale, NVidia and Texas Instrument processors that employ a BGA socket
- Secured to PCB with thermally conductive adhesive tape
- Compatible with Interscale C enclosures

Delivery includes (assembled)

Item	Qty	Description
1	1	Flexible heat conductor, assembled; thermal grease included
2	1	Adhesive tape, thermally conductive

Order Information

Height	Width mm	Depth mm	Part no.
19.75 ± 1.5 mm	22	22	24830-005

Small Form Factor Cases – Interscale Accessories

Flexible Heat Conductor (FHC), 70 mm

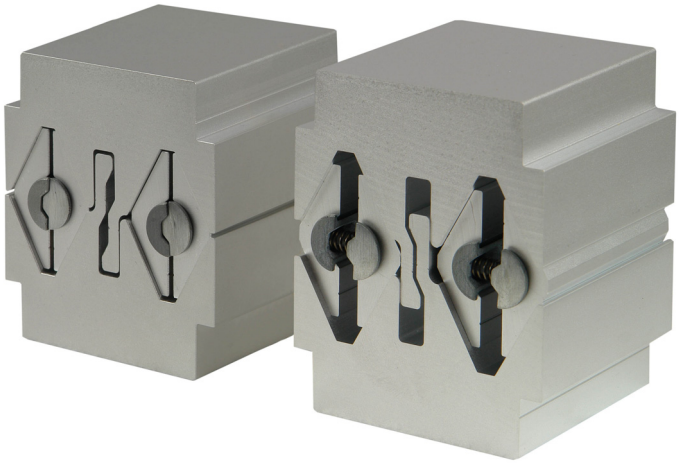

02615017

- Patent pending conduction cooling solution for small form factor electronics
- Conductor block expands/contracts vertically to compensate for tolerance stack up, and optimizes surface contact and pressure along the thermal path; eliminates the need for a thermal gap pad
- Provides industry leading conduction cooling performance, 70 % improvement over current conduction cooling methods
- Designed for ATX/ITX/Mini ITX & COM using Intel core-i processors and AMD processors with the following sockets: Intel: LGA775, LGA1150, LGA1155, LGA1156, LGA1366, LGA2011 AMD: AM2, AM2(+), AM3, AM3(+), FM1, FM2, FM2(+)
- Secured to PCB with mounting brackets, sold seperately
- Compatible with Interscale C enclosures

Item	Qty	Description
1	1	Flexible heat conductor, assembled; thermal grease included
2	1	Frame, Al

Order Information

Height	Width mm	Depth mm	Part no.
68.50 ± 2.5 mm	50	50	24830-001
Accessories			
Intel mounting brackets for 70 mm FHC			24830-002
AMD mounting brackets for 70 mm FHC			24830-003

Note

- Please order the mounting bracket (Intel or AMD, listed under accessories) to assemble the FHC to the board

Mounting brackets for 70 mm FHC

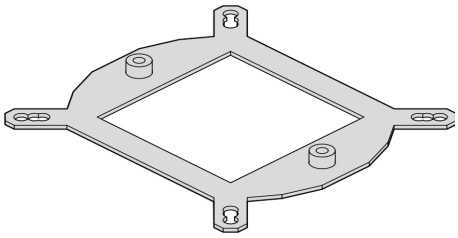

02615053

Bracket for Intel

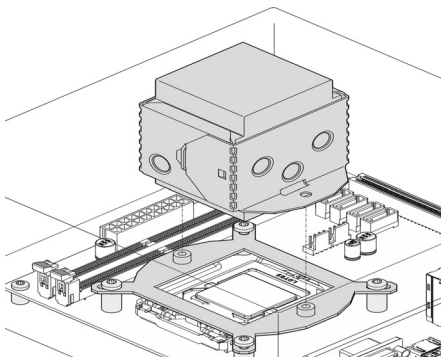

02615054

Application: Intel mounting bracket

- Designed to secure the 70 mm Flexible Heat Conductor to PCB
- Utilizes keep out zones to not interfere with other board components
- Designed for ATX/ITX/Mini ITX & COM using Intel core-i processors and AMD processors with the following sockets: Intel: LGA775, LGA1150, LGA1155, LGA1156, LGA1366, LGA2011 AMD: AM2, AM2(+), AM3, AM3(+), FM1, FM2, FM2(+)

Delivery includes (assembled)

Item	Qty	Description
1	1	Mounting bracket with associated hardware

Order Information

Description	Part no.
Intel mounting brackets for 70 mm FHC	24830-002
AMD mounting brackets for 70 mm FHC	24830-003

Small Form Factor Cases – Interscale Accessories

Clip for horizontal rail mounting

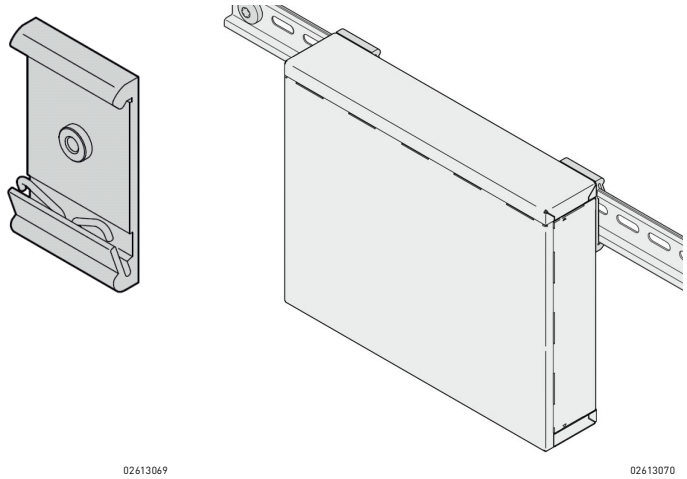

Example: Clip for horizontal rail mounted on case

- The clip can be used to fix the case to a horizontal rail
- The clip is bolted to the case instead of the feet and can then be fitted onto the rail

Delivery includes

Item	Qty	Description
1	2	Clip, Al profile, clear anodized, width 30 mm, 52 mm, snap mounting for 35 mm DIN rails EN 50022; M4 self-clinching nut
2	2	Screw, T20, M4 x 6
3	1	User manual

Order Information

Description	Qty/PU piece	Part no.
Clip for horizontal rail mounting	2	**24820-002**

Note

- Not compatible with embedded NUC cases or Interscale 19" cases

Wall or Desktop mounting bracket

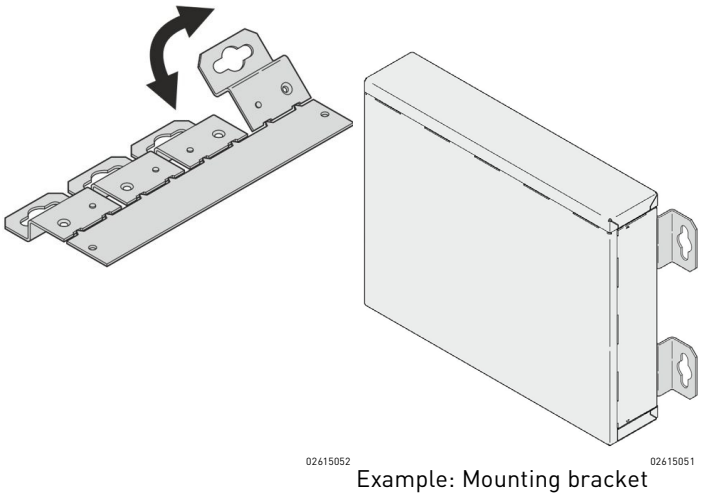

Example: Mounting bracket mounted on the case

- Bracket for wall or desktop mounting
- Provides 14 mm clearance from mounting surface for cable management
- Able to assemble / disassemble case while mounted

Delivery includes

Item	Qty	Description
1	4	Mounting bracket, St, 1.5 mm, finish AlZn

Order Information

Description	Qty/PU piece	Part no.
Wall or Desktop mounting bracket	4	**24820-005**

Note

- Not compatible with embedded NUC cases or Interscale 19" cases

Small Form Factor Cases – Interscale Accessories

Plastic tip-up feet

01810004

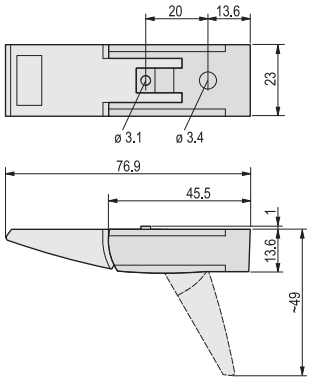

02613008 02906050

Application example

- Can be used instead of standard feet
- Carrying capacity: 25 kg per foot
- Mounting holes in bottom of casing

Delivery includes (kit)

Item	Qty	Description
1	4	Foot, PA, UL 94 V-0
2	4	Anti-slip protection, TPE
3	2	Tip-up device, PA, UL 94 V-0
4	1	Assembly kit

Order Information

Description	Qty/PU piece	Part no.
Tip-up feet, anthracite, similar to RAL 7016	4	**20603-002**

Note

- Not compatible with embedded NUC cases or Interscale 19" cases

Stacking aid

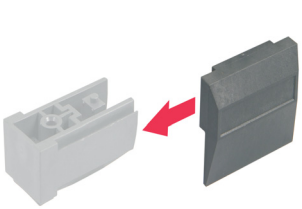

01810005 02613020

Application example Interscale

- Stacking aid is clipped onto tip-up feet (please order tip-up feet separately)

Delivery includes (kit)

Item	Qty	Description
1	4	Stacking aid, PA ,UL 94 V-0

Order Information

Description	Qty/PU piece	Part no.
Stacking aid, anthracite, similar to RAL 7016	4	**20603-003**
Accessories		
Plastic tip-up feet anthracite, similar to RAL 7016, 4 pieces		**20603-002**

Note

- A plastic tip-up feet are required for mounting, please order separately
- Not compatible with Interscale 19" cases, Interscale for embedded NUC cases or Interscale conduction cooled cases

Rubber feet

02615020

- Toolless installation; secures via adhesive
- Compatible with all Interscale cases

Delivery includes (assembled)

Item	Qty	Description
1	4	Rubber feet, height 2.2 mm, Ø 7.9 mm

Order Information

Description	Part no.
Rubber feet	21102-025

Small Form Factor Cases – Interscale Accessories

Plastic feet

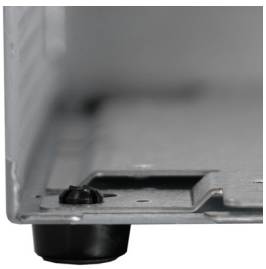

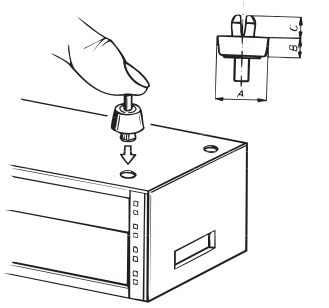

02613010 A4-330

Illustration shows mounting of feet

Dimensions			Hole diameter
A	B	C	
mm	mm	mm	mm
16	7.2	4	7

- Plastic feet with rubberized base
- Toolless installation; fixed by pressing in the expanding pin

Delivery includes

Item	Qty	Description
1	1	Plastic foot, PC, UL 94 V-0, black, with anti-slip protection

Order Information

Description	Qty	Part no.
Plastic feet	SPQ 50 [1]	**60224-009**
Plastic feet	PU 4 [2]	**24820-004**

1) SPQ (standard pack quantity): Part number includes 1 piece, but delivery is exclusively made in standard pack quantity (SPQ); please order at least the SPQ quantity or a multiple

2) PU - Part no. includes one packing unit (PU); delivery is exclusively made in PU

Note

- Not compatible with Interscale 19" cases, Interscale for embedded NUC cases or Interscale conduction cooled cases

Assembly tool

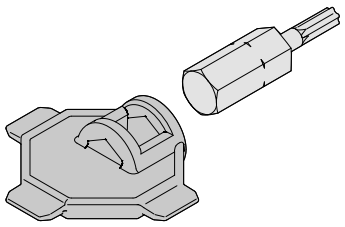

02613064

- Plastic tool with bit can be used for bolting together and opening the case
- Compatible with all Interscale M and C enclosures

Delivery includes

Item	Qty	Description
1	1	Assembly tool (plastic)
2	1	Bit, Torx, T10

Order Information

Description	Part no.
Assembly tool	**24820-001**

Screwdriver

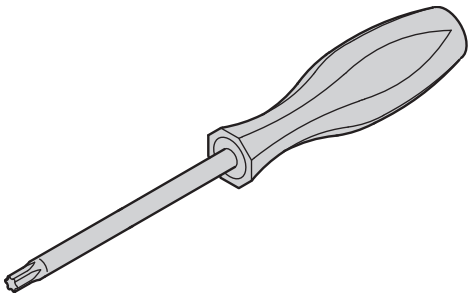

AZA45925

- Used for securing PCBs to studs
- Compatible with all Interscale M and Interscale C enclosures

Order Information

Description	Part no.
Torx screwdriver, M2.5, T 8 Torx	**64560-026**

Content

Cabinets 1
Wall mounted cases 2
Accessories for cabinets and wall mounted cases . 3
Climate control . 4
Electronics cases 5
Subracks/ 19" chassis 6
Front panels, plug-in units . . . 7
Systems 8
Power supply units 9
Backplanes . . . 10
Connectors, front panel component system 11
Appendix 12

Small Form Factor Cases – minipac

04812001

Small aluminium extrusion cases to hold PCBs

- For applications e.g. in industry, railway technology, test and measurement, communications and network technology

Fixing options

04812006

04811015

04812003

Various dimensions/colours

04812023

04812024

04812025

Individual shapes

04812026

04812027

04812028

Small Form Factor Cases – minipac

Overview 5.138

Convenient small case - flexible enough for all your requirements

- To accomodate standardised and non-standardised PCBs
- As desktop enclosure, for bolting (e.g. to a mounting plate) or for mounting on DIN support rail (DIN 43880)
- High level of heat dissipation through large aluminimum surface of case
- High stability
- Type of protection: IP 40

04811014

Trapezium shape

- Accommodates up to 3 PCBs of different heights - 50, 60 or 65 mm and board depth 100 or 160 mm
- As desktop enclosure, for wall mounting or for mounting on DIN support rail (DIN 43880)

Trapezium shape 5.140

04812002

Rectangular shape

- Accommodates up to 4 standardised PCBs in euroboard format, height 100 mm (3 U) or up to 8 non-standardised PCBs, height 60 mm and board depth 160 mm
- Versions as desktop enclosure or for wall mounting

Rectagonal shape 5.141

30407004

Individual cases in aluminium extrusion - our minipac variety to your specifications

- Other case lengths
- Other case shapes
- Cut-outs for lamps, switches, connectors, cable ducting, etc.
- Individual printing of cover plates
- Surface finish anodised or powder-coated

FRONT PANEL EXPRESS

30402151

Small Form Factor Cases – minipac

Trapezium shape

04812004

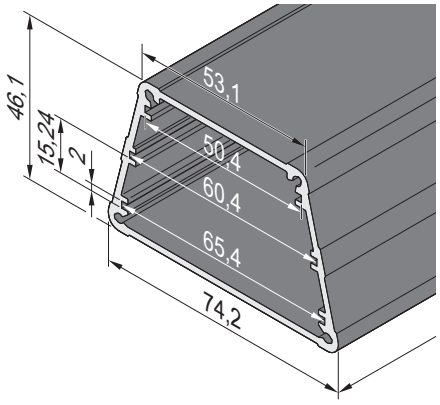

04811053

Dimensions of body tube

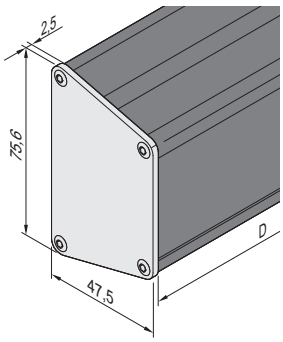

04812053

Desktop version

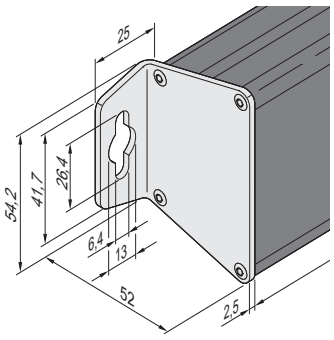

04812052

Wall mounting
(on short side of trapezoid)

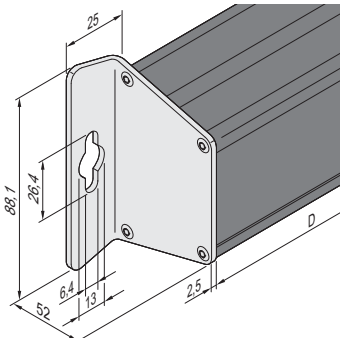

04812051

Wall mounting
(on long side of trapezoid)

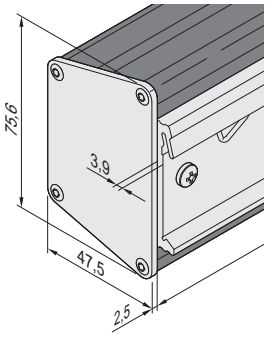

04812057

For mounting on a DIN support rail (DIN 43880)

- Accommodates 3 non-standardised PCBs (height 50, 60 and 65 mm, depth 100/160 mm)
- PCB thickness 1.6 mm, spacing 15.24 mm (3 HP)
- Different versions
  - Wall mounting
  - For mounting on a DIN support rail (DIN 43880)
  - Desktop version

Delivery comprises

Item	Qty	Description
1	1	Case, trapeziform, Al extrusion
2	2	Lateral cover plate, 2.5 mm, anodised
3	1	Fixing material kit, user manual

Order Information

Description	Length mm	Part no.
Case, trapeziform, Al extrusion, black anodised; lateral cover plates anodised, thickness 2.5 mm (no mounting option)	100.5	24814-008
Case, trapeziform, Al extrusion, black anodised, lateral cover plates anodised, thickness 2.5 mm (for wall mounting on long side of trapezoid)	100.5	24814-010
Case, trapeziform, Al extrusion, anodised; lateral cover plates anodised, thickness 2.5 mm (for wall mounting on short side of trapezium)	100.5	24814-011
Case, trapeziform, Al extrusion, black anodised; for DIN support rail mounting (DIN 43880); lateral cover plates anodised, thickness 2.5 mm (for mounting on a DIN support rail, DIN 43880)	160.5	24814-014
Accessories		
Rubber foot for desktop version, PU 4 pieces		21102-025

Note

- **On request:**
  - Other case lengths
  - Cut-outs for LEDs, switches, connectors or couplings (USB, SUB-D)
  - Individual printing on cover plate

Small Form Factor Cases – minipac

Rectangular shape

04812002

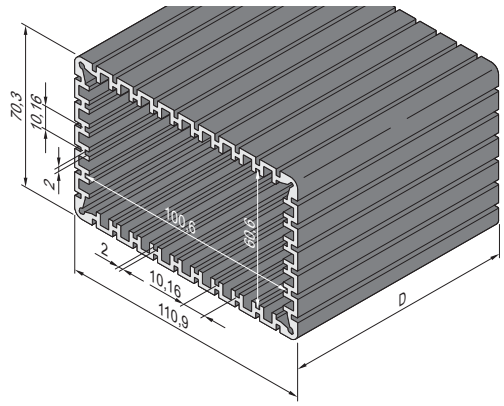

04812050

Dimensions of body tube

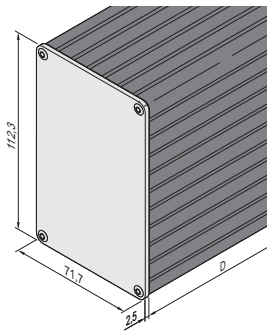

04812056

Desktop version

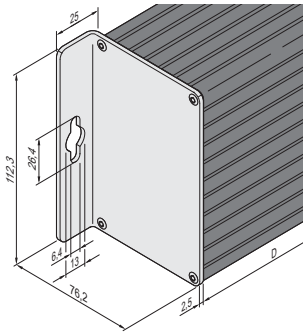

04812055

Wall mounting
(on long side of rectangle)

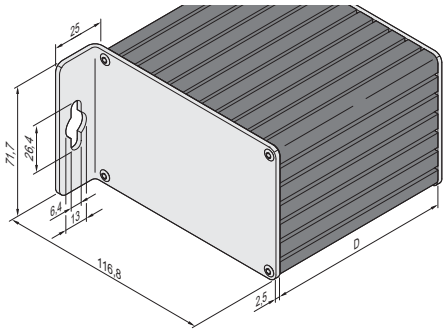

04812054

Wall mounting (on short side of rectangle)

- Accommodates 4 standardised PCBs (height 100 mm, depth 160 mm) or rotated by 90° to accomodate 8 non-standardised PCBs (height 60 mm, depth 160 mm)
- PCB thickness 1.6 mm, spacing 15.24 mm (2 HP)
- Different versions
  - Wall mounting
  - Desktop version

Delivery comprises

Item	Qty	Description
1	1	Case, rectangular, Al extrusion
2	2	Lateral cover plate, 2.5 mm, anodised
3	1	Fixing material kit, user manual

Order Information

Description	Length mm	Part no.
Case, rectangular, Al extrusion, black anodised; lateral cover plates anodised, thickness 2.5 mm (desktop version)	160.5	24814-024
Case, rectangular, Al extrusion, anodised; lateral cover plates anodised, thickness 2.5 mm (for wall mounting on long side)	160.5	24814-025
Case, rectangular, Al extrusion, anodised; lateral cover plates anodised, thickness 2.5 mm (for wall mounting on short side)	160.5	24814-027
Accessories		
Rubber foot for desktop version, PU 4 pieces		21102-025

Note

- **On request:**
  - Other case lengths
  - Cut-outs for LEDs, switches, connectors or couplings (USB, SUB-D)
  - Individual printing on cover plate

Content

Cabinets 1

Wall mounted cases 2

Accessories for cabinets and wall mounted cases . 3

Climate control . 4

Electronics cases 5

Subracks/ 19" chassis 6

Front panels, plug-in units . . . 7

Systems 8

Power supply units 9

Backplanes . . . 10

Connectors, front panel component system 11

Appendix 12

Subracks/19" chassis – Overview

europac PRO

19" subrack with high flexibility
in accordance with IEC 60297-3-103 and IEEE 1101.10/11

For different applications:

- Kits, individual configuration and an extensive accessory range
- Industrial applications
- Shock and vibration resistance up to 5 g, e.g. for mobile railway applications
- Shock and vibration resistance up to 25 g for rugged environments, e.g. mobile military applications

36106005 (06109001 06108006 06112002 06112020)

Subracks/19" chassis – Overview

Overview 6.0

multipacPRO

19" chassis for non-standard components and horizontal board construction
Versions in aluminium and steel plate (AlZn coated)
Kits from stock or to individual configuration

europacPRO . . . 6.2

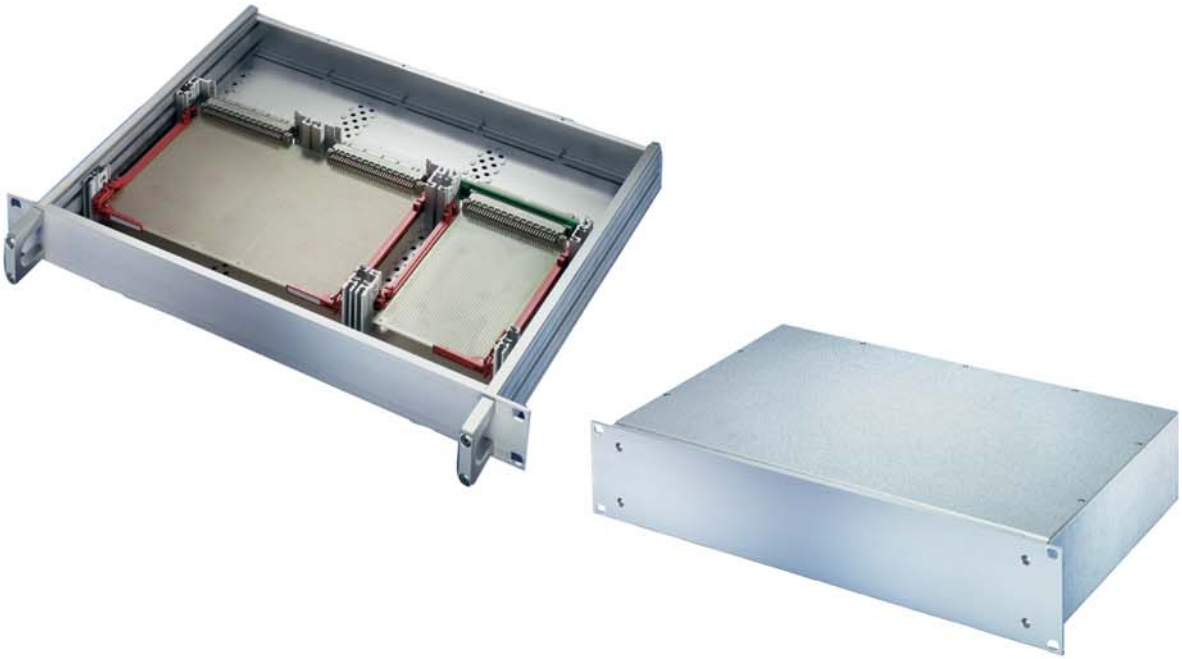

multipac 6.112

inpac 6.128

Application examples
europacPRO . . . 6.69
Subracks for mobile railway applications 6.70
multipac 6.112

inpac

19" chassis with high mechanical stability
Flexible construction for standard board formats or individual solutions
Can be used as a desk-top enclosure

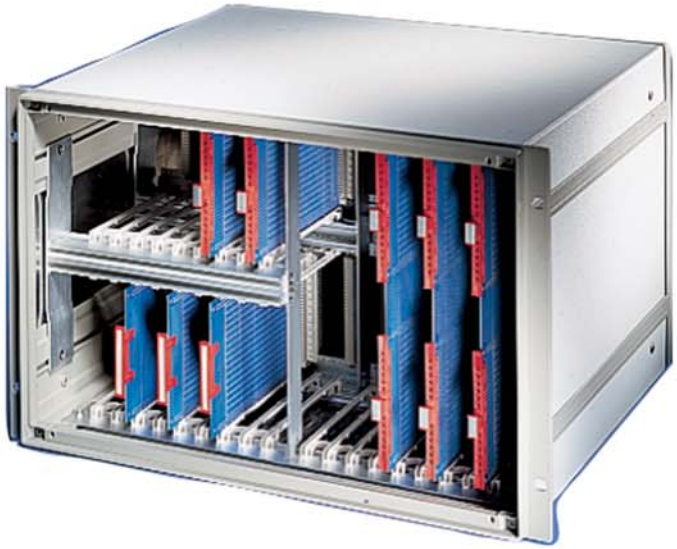

36106006 (06002001 06002003 02192004)

Cabinets 1

Wall mounted cases 2

Accessories for cabinets and wall mounted cases . 3

Climate control . 4

Electronics cases 5

Subracks/ 19" chassis 6

Front panels, plug-in units . . . 7

Systems 8

Power supply units 9

Backplanes . . . 10

Connectors, front panel component system 11

Appendix 12

europacPRO standard

- 19" subrack with high flexibility
- EMC shielding upgradable
- In accordance with IEC 60297-3-103 and IEEE 1101.10/11
- Kit from stock or individual configuration

europacPRO for mobile railway applications

- Over and above the europacPRO standard range additional shock and vibration properties for up to 5 g in accordance with the standards:
  - IEC 61587-1, EN 50155
  - BN 411002 and BN 411003
  - NF F 61-005 / NF F 60-002

36112001 (06109001 06103001 06108006)

Subracks – europacPRO

Overview 6.2

europacPRO for industrial applications

- Over and above the europacPRO standard range additional kits for wall mounting or for installation of supply modules to DIN 43880

europacPRO for rugged applications

- Over and above the europacPRO standard range additional shock and vibration properties for up to 25 g in accordance with the standards:
  MIL 167, IEC 61587 DL 3, MIL 810 G, MIL 901

europacPRO accessories

- Extensive range of accessories for europacPRO products
- Side panels, horizontal rails, guide rails, cover plates, front/rear covers, handles and shielding components
- Interior assembly: combined mounting 6 or 2 x 3 U, horizontal board mounting, mounting plates, panel mounting, central locking, telescopic slides, divider plates, air deflectors, 19" module support and extensive fixing material kit

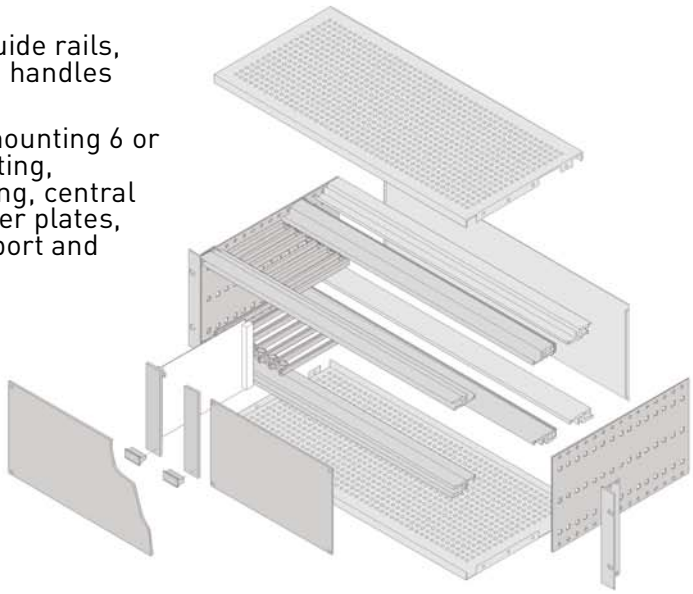

36112002 (01494031 06112002 06112001 06112020)

Introduction 6.4
europacPRO ... 6.6
Subracks for mobile railway applications 6.70
europacPRO for industrial applications 6.86
europacPRO for rugged applications 6.92
Accessories 6.17

Subracks – europacPRO Introduction

Platform-based standard solutions for individual requirements

Practical technology without time-consuming assembly. The modular europacPRO product platform allows a wide range of possible applications with only a few components. The intelligent design of all components results in remarkably simple and fast management in assembly and components.

Two ways of reaching your desired product:

- Kits
- Individual configuration

Simple assembly with europacPRO kits:

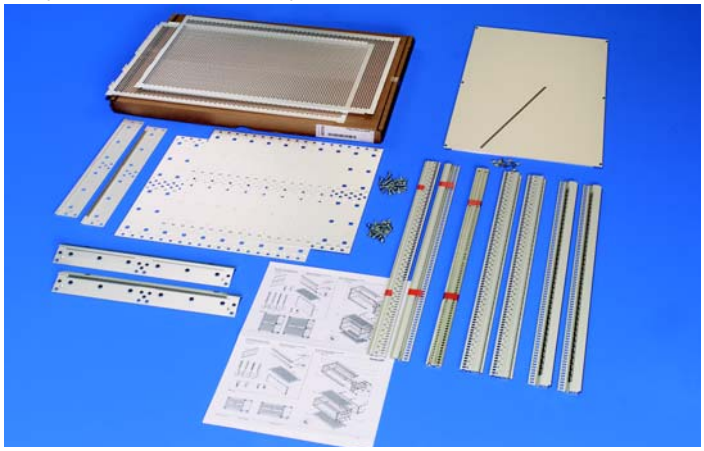

06107001

Delivered in space-saving flat packs. The threaded inserts or EMC gasket (depending on selected kit) are already pre-mounted on the horizontal rail.

Individual configuration:

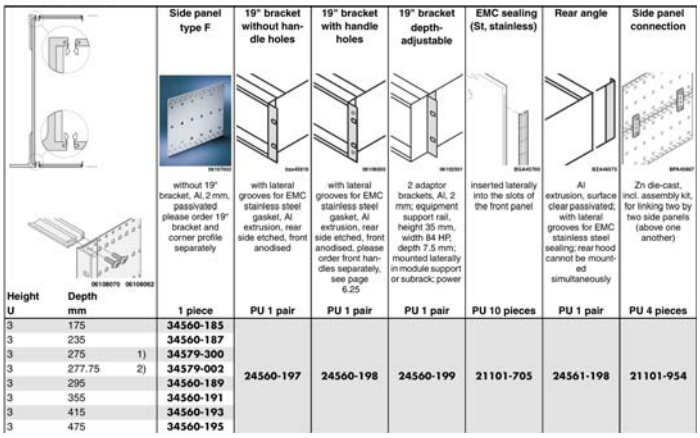

Height U	Depth mm		Side panel type F	19" bracket without handle holes	19" bracket with handle holes	19" bracket depth-adjustable	EMC sealing (St, stainless)	Rear angle	Side panel connection
			without 19" bracket, Al, 2 mm, passivated please order 19" bracket and corner profile separately	with lateral grooves for EMC stainless steel gasket, Al extrusion, rear side etched, front anodised	with lateral grooves for EMC stainless steel gasket, Al extrusion, rear side etched, front anodised, please order front handles separately, see page 6.25	2 adaptor brackets, Al, 2 mm; equipment support rail, height 35 mm, width 84 HP, depth 7.5 mm; mounted laterally in module support or subrack; power	inserted laterally into the slots of the front panel	Al extrusion, surface clear passivated; with lateral grooves for EMC stainless steel sealing; rear hood cannot be mounted simultaneously	Zn die-cast, incl. assembly kit, for linking two by two side panels (above one another)
			1 piece	PU 1 pair	PU 1 pair	PU 1 pair	PU 10 pieces	PU 1 pair	PU 4 pieces
3	175		34560-185						
3	235		34560-187						
3	275	1)	34579-300						
3	277.75	2)	34579-002	24560-197	24560-198	24560-199	21101-705	24561-198	21101-954
3	295		34560-189						
3	355		34560-191						
3	415		34560-193						
3	475		34560-195						

06109052

You design your subrack as you wish, then receive it fully assembled via our **ServicePLUS assembly service** (even for orders of just one). We can also carry out individual modifications and cut-outs; and when time is short can do so very fast via ServicePLUS express.

Horizontal rails and side panels for different load-carrying classes

06197007

Light

06197008

Heavy

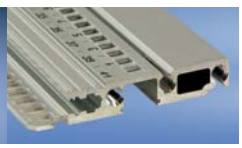

06112004

Rugged

Horizontal rails are available for three load classes:

- "light" (load up to approx. 7.5 kg)
- "heavy" (load > 7.5 kg)
- "rugged" (load 15 kg)

06197002

Type Light

06197003

Type Flexible

06197004

Type Heavy

06112021

Type Rugged

Side panels for 4 different load classes

- Light: low-cost version with built-in 19" mounting bracket
- Flexible: with separate, depth-adjustable 19" mounting bracket
- Heavy: with integrated, tox-cold welded 19" mounting bracket, e.g. for shock and vibration environments up to 5 g
- Rugged: with integrated, tox-cold welded 19" mounting bracket and higher material thicknesses for extreme mechanical stresses, e.g. for increased shock and vibration environments up to 25 g
- The combination of the 3 horizontal rail variants with the 4 types of side panel results in an almost unlimited variety of potential applications for various market requirements

Subracks – europacPRO Introduction

Guide rails from plastic and aluminium profiles

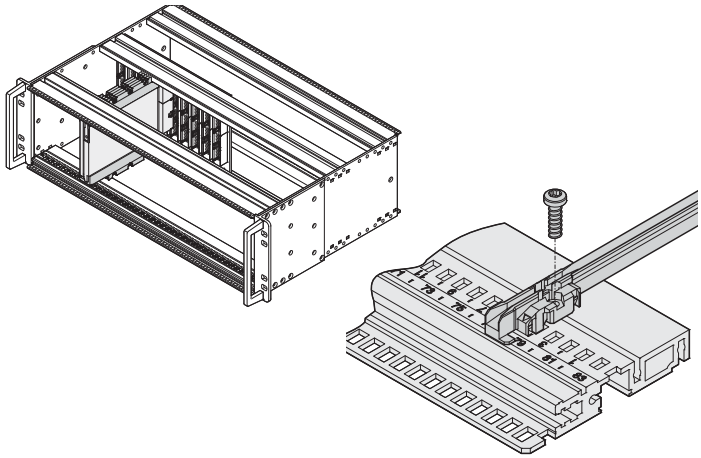

06112052 06111059

Guide rails form the interface between the subrack mechanics and the assemblies (boards, plug-in units, frame type plug-in units, drive unit modules, ...).

Robust snap-in fixings on the plastic rails assure a secure grip, even when exposed to vibrations. In the case of H and R-type horizontal rails the guide rails can also be bolted on. For extreme stresses, guide rails in aluminium extrusion are used.

To ensure that the wrong subassembly is not inserted into the wrong space we offer a mechanical coding to IEEE 1101.10/11 and IEC 60297-3-103.

The continuous numbering on the horizontal rail (from 28 HP) and the markings on the guide rails facilitate quick fitting in the correct position.

We offer the appropriate adaptors for accommodating VPX or CompactPCI boards with strengthening frame or conduction-cooled assemblies (CCA) installed in a subrack.

Electromagnetic shielding and ESD

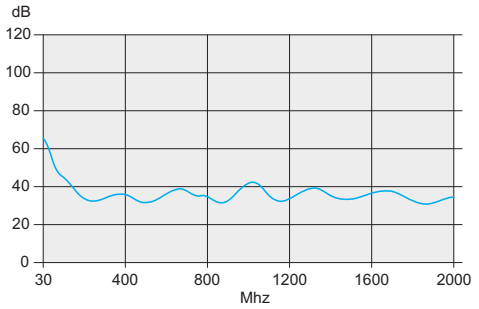

06108081

The product platform europacPRO offers a variety of off-the-shelf solutions to assure electromagnetic compatibility (EMC) and to avoid electrostatic discharge (ESD).

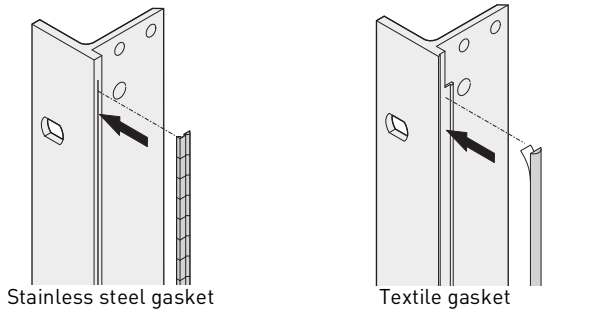

06108074 06108073

Two shielding concepts

It can't be more secure!

Two types of shielding concepts to front/rear of the subrack allow the use all Schroff frontpanels.

The shielding at the front of the subrack is by means of stainless steel or textile EMC gaskets.

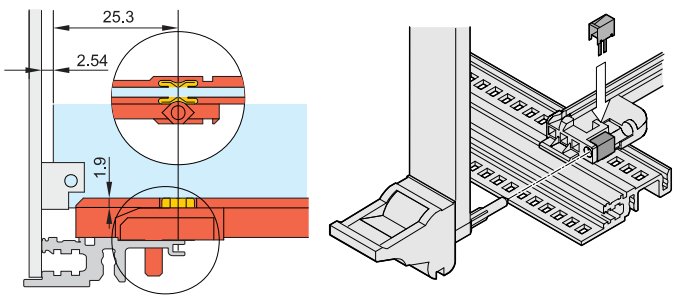

04503050 06103052

ESD (electrostatic discharge)

To avoid electrostatic discharge when inserting PCBs, ESD contacts are clipped into the guide rails. These establish a conductive connection between PCB and subrack-earth. Under IEC 60297-3-101 two ESD areas are defined on the euroboard. The ESD clips of the guide rail of the europacPRO subrack allow the assembly of both following variants:

- ESD area (bottom and top) over the complete board length
- ESD area (bottom/top) begins at the front from 70 mm to end of board)

Content

Cabinets 1
Wall mounted cases 2
Accessories for cabinets and wall mounted cases . 3
Climate control . 4
Electronics cases 5
Subracks/ 19" chassis 6
Front panels, plug-in units . . . 7
Systems 8
Power supply units 9
Backplanes . . . 10
Connectors, front panel component system 11
Appendix 12

Subracks – europac PRO

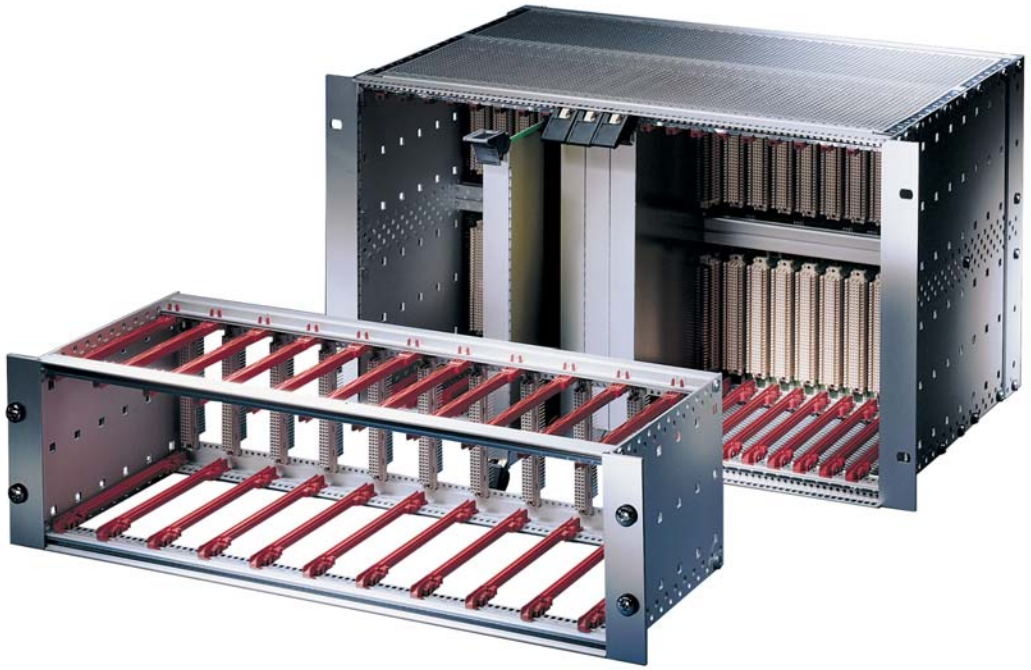

06197001

06112014

Different horizontal rails for various applications

04602002

The IEEE handles and shielded front panels are designed for the construction of CompactPCI and VME64x subrack systems

06

Sequential numbering on horizontal rails (> 28 HP) and markings on the guide rails provide quick optical positioning aids. ESD clips can be used at front or rear, to protect electronics from electrostatic discharge

Standards/certifications

- Inner and outer dimensions meet: IEC 60297-3-100, -101, - 102, -103, -104, -105 IEEE 1101.1 and IEEE 1101.10/11
- Type of protection IP 20 to IEC 60529
- EMC testing to IEC 61587-3
- Shock and vibration test reports: German "Bahn" standards BN 411002, BN 411003; NF F 60002, NF F 67012 IEC 61587-2, EN 50155
- Nuclear plants KTA 1401

EMC curve

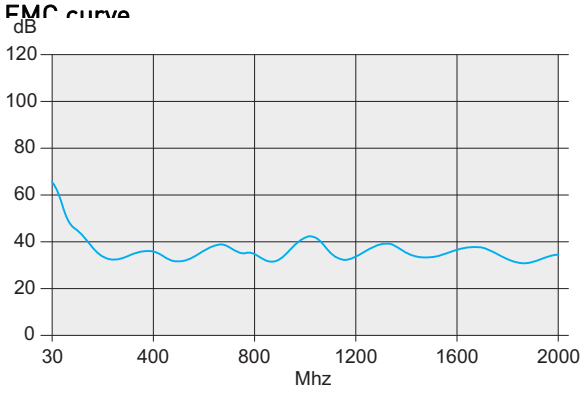

06108081

Subracks – europacPRO

Overview 6.6

19" subracks

- Kits or individual configuration
- One product and accessories platform for every kind of customer requirement and application
- Suitable for CompactPCI and VME64x insertion and extractor handles
- EMC shielding can easily be retrofitted if needed
- Shock and vibration resistant up to 5 g
- 3D PDF or CAD 3D data available for download

Introduction.... 6.4

06102008

Kits

- All required parts available under one order number, some pre-fitted
- Most popular dimensions and versions available from stock
- For installed loads up to 7.5 kg, up to 11 kg and up to 15 kg
- As unshielded or shielded version
- Supplied as space-saving flat-pack

Kits
Light 6.8
Flexible 6.9
Heavy 6.14
CompactPCI..... 6.16

ServicePLUS ... 6.16

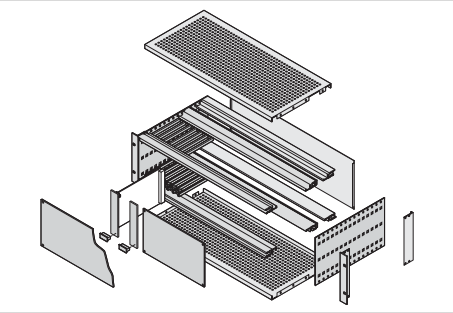

06105058

ServicePLUS individual configuration

- Single parts may individually be configured, respectively assembled on request (from quantity 1)
- Very wide range of variants in heigth, width and depth
- Guide rails for different applications
- EMC shielding material to improve EMC performance
- Interior assembly options with mounting plate or combined mounting (3 + 6 U segments)
- Other accessories and assembly kits

ServicePLUS configuration
Side panels 6.21
Horizontal rails, threaded inserts, perforated strips . 6.29
Guide rails 6.37
Cover plates 6.44
EMC shielding ... 6.54
Interior assemblies 6.59
Assembly kits 6.65

Application examples 6.71

Subracks for mobile railway applications 6.70

europacPRO for industrial applications 6.86

30407004

ServicePLUS from page 6.16

e.g. individual configuration and assembly
e.g. modification (cut-outs)
e.g. downloads (CAD drawings, user manuals, test reports)
e.g. custom solutions

www.schroff.biz/ServicePLUS

europacPRO for rugged applications 6.92

Kit, "light", unshielded, for backplane mounting

06111002

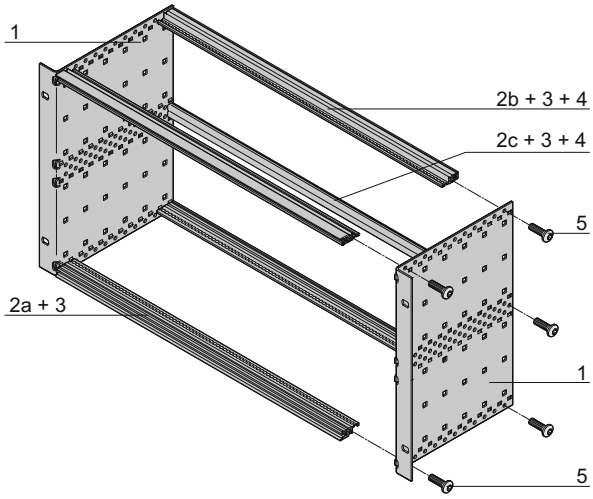

06111056

6 U

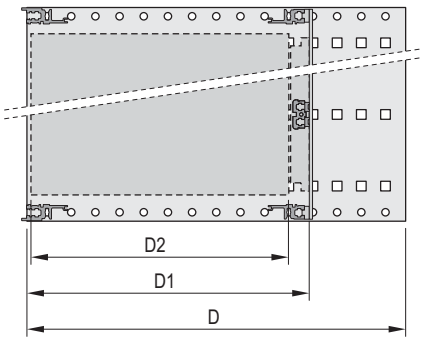

06108051

D = overall depth, D1 = insertion depth,
D2 = board depth = D1 - 15 mm

04400001

Rear horizontal rail for backplane mounting with insulation strip

- Subrack with side panel type L ("light") with firmly fixed 19" brackets
- Rear horizontal rails for backplane mounting with insulation strip
- Installed load up to 7.5 kg
- Cost-optimised

NEW

Delivery comprises (Kit)

Item	Qty 3 U	Qty 6 U	Description
1	2	2	Side panel type L, Al, 2 mm, passivated, with built-in 19" support bracket
2a	2	2	Front horizontal rail (L-KD)
2b	2	2	Rear horizontal rail (L-ST)
2c	-	1	Rear horizontal rail centre (ST)
3	4	6	Threaded insert, front and rear (pre-fitted)
4	2	4	Insulation strip (pre-fitted)
5	1	1	Fixing material kit, user manual

Order Information

Height U	Width HP	Depth D mm	Depth D1 mm	Part no.
3	84	175	175	**24564-131**
3	84	235	175/235	**24564-132**
3	84	295	175/235/295	**24564-133**
6	84	175	175	**24564-431**
6	84	235	175/235	**24564-432**
6	84	295	175/235/295	**24564-433**

Accessories

19" assembly kit (screw, washer, nut) (8 × screws, 8 × plastic washers, 8 × cage nuts)	**21100-435**

Guide rails (standard), ESD clips

Depth D2 mm	Qty/PU piece	Part no.
160	10	**24560-351**
220	10	**24560-353**
280	10	**24560-379**
ESD clips for guide rails PU 50 pieces		**24560-255**

Cover plates for insertion in horizontal rails (type L)

Depth D2 mm	Width HP	Qty/PU piece	Part no.
160	84	2	**24561-051**
220	84	2	**24561-052**

Note

- Subrack is not prepared for shielding
- ServicePLUS configuration from page 6.16

ServicePLUS see page 6.16

Subracks – europac PRO

Kit, "flexible", unshielded, for connector mounting

06105001

Photo: 3 U subrack

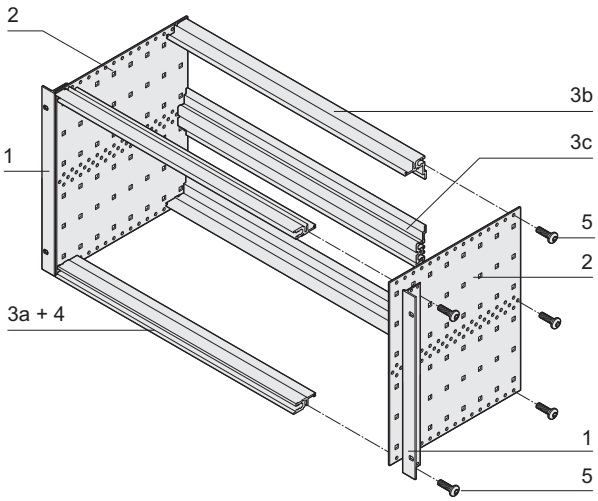

06105054

6 U

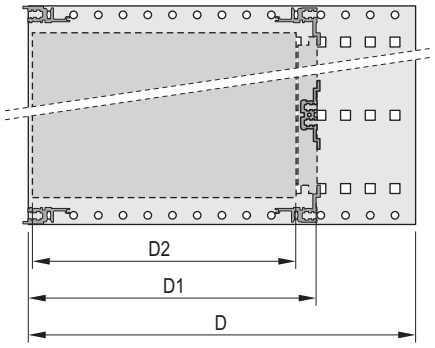

06108050

D = overall depth, D1 = insertion depth,
D2 = board depth = D1 - 15 mm

04400003

Horizontal rail to rear for connector mounting

ServicePLUS see page 6.16

- Subrack with side panel type F ("flexible"), 19" bracket is depth-adjustable
- Rear horizontal rails for connector mounting (IEC 60603-2 / DIN 41612)
- Installed load up to 11 kg

Delivery comprises (kit)

Item	Qty 3 U	Qty 6 U	Description
1	2	2	19" support bracket, Al extrusion, for EMC gasket (St, stainless)
2	2	2	Side panel type F, Al, 2 mm
3a	2	2	Front horizontal rail (L-KD)
3b	2	2	Rear horizontal rail (L-MZ) for connector mounting
3c	-	1	Centre horizontal rail (MZ)
4	2	2	Threaded insert to front (pre-fitted)
5	1	1	Fixing material kit, user manual

Order Information

Height U	Width HP	Depth D mm	Depth D1 mm	Part no.
3	84	175	175	**24563-191**
3	84	235	175/235	**24563-192**
3	84	295	175/235/295	**24563-193**
3	84	355	175/235/295/355	**24563-194**
6	84	175	175	**24563-491**
6	84	235	175/235	**24563-492**
6	84	295	175/235/295	**24563-493**
6	84	355	175/235/295/340	**24563-494**

Accessories

19" assembly kit (screw, washer, nut) (8 × screws, 8 × plastic washers, 8 × cage nuts)	**21100-435**

Guide rails (standard), ESD clips

Depth D2 mm	Qty/PU piece	Part no.
160	10	**24560-351**
220	10	**24560-353**
280	10	**24560-379**
340	10	**24560-380**
ESD clip for guide rails PU 50 pieces		**24560-255**

Cover plates for insertion in horizontal rails (type L)

Depth D2 mm	Width HP	Qty/PU piece	Part no.
160	84	2	**24561-051**
220	84	2	**24561-052**

Note

- ServicePLUS configuration from page 6.16

Subrack kit, unshielded for connector, assembly on slide rail

06105001

Photo: 3 U subrack

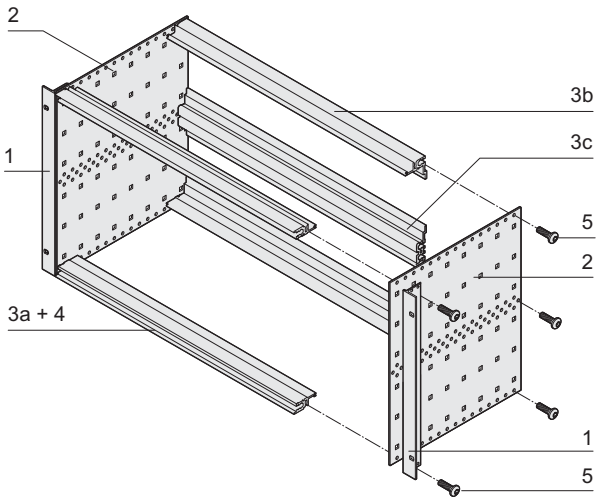

06105054

6 U

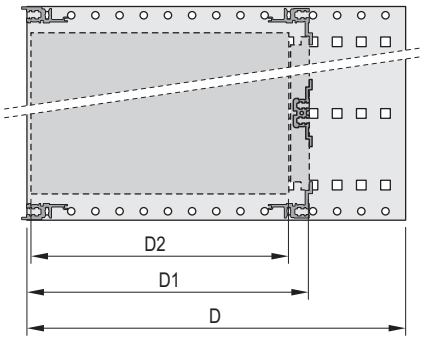

06108050

D=overall depth, D1=insertion depth,
D2=board depth = D1 - 15 mm

04400003

Rear horizontal rail for connector mounting

- Subrack can be used with slide rails
- Subrack with side panel type F ("flexible"), 19" bracket is depth-adjustable
- Horizontal rails, rear, for connector mounting (IEC 60603-2 / DIN 41612)
- Installed load up to 11 kg

Delivery includes (Kit, flat pack)

Item	Qty 3 U	Qty 6 U	Description
1	2	2	19" support bracket, Al extrusion, for EMC sealing (St, stainless)
2	2	2	Side panel type F, Al, 2 mm
3a	2	2	Front horizontal rail (L-KD)
3b	2	2	Rear horizontal rail (L-MZ) for connector mounting
3c	-	1	Center horizontal rail (MZ)
4	2	2	Threaded insert to front (pre-fitted)
5	1	1	Fixing materials kit, user manual

Order Information

Height U	Width HP	Depth D mm	Depth D1 mm	Part no.
3	84	235	175/235	24553-192
3	84	295	175/235/295	24553-193
3	84	355	175/235/295/355	24553-194
6	84	235	175/235	24553-492
6	84	295	175/235/295	24553-493
6	84	355	175/235/295/355	24553-494

Accessories

19" fixing material kit (screw, washer, nut) (8 × screws, 8 × plastic washers, 8 × cage nuts)	**21100-435**

Guide rails (standard), ESD clips

Depth D2 mm	Qty/PU piece	Part no.
160	10	**24560-351**
220	10	**24560-353**
280	10	**24560-379**

ESD clip for guide rails Spring steel, tin-plated, silver, PU 50 pieces	**24560-255**

Cover plates for insertion into horizontal rail type L

Depth D2 mm	Width HP	Qty/PU piece	Part no.
160	84	2	**24561-051**
220	84	2	**24561-052**

Note

- Alternative product for older europac lab and europacRational subrack series
- ServicePLUS configuration from page 6.18

Subracks – europacPROKits

Subrack kit, unshielded, flexible for backplane, assembly on slide rail

06102007

Photo: 3 U subrack

- Subrack can be used with slide rails
- Subrack with side panel type F ("flexible"), 19" bracket is depth-adjustable
- Rear horizontal rails for backplane mounting with insulation strip
- Installed load up to 11 kg

Delivery includes (Kit, flat pack)

Item	Qty 3 U	Qty 6 U	Description
1	2	2	19" support bracket, Al extrusion, for EMC sealing (St, stainless)
2	2	2	Side panel type F, Al, 2 mm
3a	2	2	Front horizontal rail (L-KD)
3b	2	2	Rear horizontal rail (L-ST) for backplane mounting
3c	-	1	Rear center horizontal rail (ST)
4	4	6	Threaded inserts, front and rear (pre-fitted)
5	2	4	Insulation strip (pre-fitted)
6	1	1	Fixing materials kit, user manual

6 U

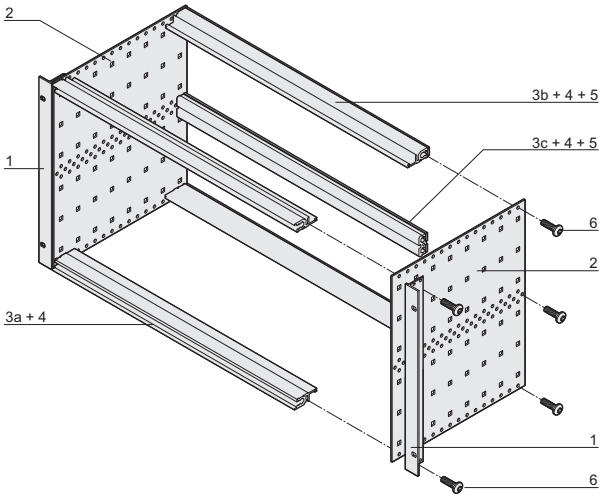

06102081

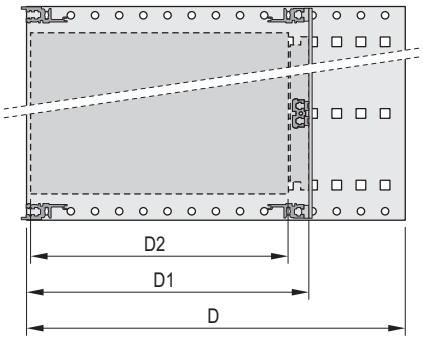

06108051

D=overall depth, D1=insertion depth,
D2=board depth = D1 - 15 mm

04400001

Rear horizontal rail for backplane mounting with insulation strip

Order Information

Height U	Width HP	Depth D mm	Depth D1 mm	Part no.
3	84	235	175/235	24553-132
3	84	295	175/235/295	24553-133
3	84	355	175/235/295/355	24553-134
6	84	235	175/235	24553-432
6	84	295	175/235/295	24553-433
6	84	355	175/235/295/355	24553-434

Accessories

19" fixing material kit (screw, washer, nut) (8 × screws, 8 × plastic washers, 8 × cage nuts)	**21100-435**

Guide rails (standard), ESD clips

Depth D2 mm	Qty/PU piece	Part no.
160	10	**24560-351**
220	10	**24560-353**
280	10	**24560-379**
340	10	**24560-380**

ESD clip for guide rails Spring steel, tin-plated, silver, PU 50 pieces	**24560-255**

Cover plates for insertion into horizontal rail type L

Depth D2 mm	Width HP	Qty/PU piece	Part no.
160	84	2	**24561-051**
220	84	2	**24561-052**

Note

- Alternative product for older europac lab and europacRational subrack series
- ServicePLUS configuration from page 6.18

Kit, "flexible", unshielded, for backplane mounting

06102007

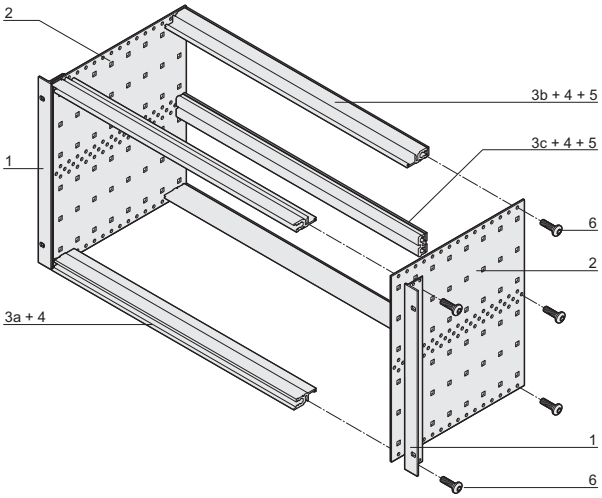

06102081

6 U

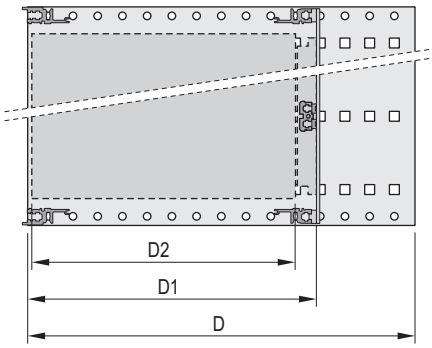

06108051

D = overall depth, D1 = insertion depth,
D2 = board depth = D1 - 15 mm

04400001

Rear horizontal rail for backplane mounting with insulation strip

- Subrack with side panel type F ("flexible"), 19" bracket is depth-adjustable
- Rear horizontal rail for backplane mounting with insulation strip
- Installed load up to 11 kg

Delivery comprises (kit)

Item	Qty 3 U	Qty 6 U	Description
1	2	2	19" support bracket, Al extrusion, for EMC stainless steel gasket
2	2	2	Side panel type F, Al, 2 mm
3a	2	2	Front horizontal rail (L-KD)
3b	2	2	Rear horizontal rail (L-ST) for backplane mounting
3c	-	1	Rear horizontal rail centre (ST)
4	4	6	Threaded insert, front and rear (pre-fitted)
5	2	4	Insulation strip (pre-fitted)
6	1	1	Fixing material kit, user manual

Order Information

Height U	Width HP	Depth D mm	Depth D1 mm	Part no.
3	84	175	175	**24563-131**
3	84	235	175/235	**24563-132**
3	84	295	175/235/295	**24563-133**
3	84	355	175/235/295/355	**24563-134**
3	84	415	175/235/295/355	**24563-135**
3	84	475	175/235/295/355	**24563-136**
6	84	175	175	**24563-431**
6	84	235	175/235	**24563-432**
6	84	295	175/235/295	**24563-433**
6	84	355	175/235/295/355	**24563-434**
6	84	415	175/235/295/355	**24563-435**
6	84	475	175/235/295/355	**24563-436**

Accessories

19" assembly kit (screw, washer, nut) (8 × screws, 8 × plastic washers, 8 × cage nuts)	**21100-435**

Guide rails (standard), ESD clips

Depth D2 mm	Qty/PU piece	Part no.
160	10	**24560-351**
220	10	**24560-353**
280	10	**24560-379**
340	10	**24560-380**
ESD clip for guide rails PU 50 pieces		**24560-255**

Cover plates for insertion in horizontal rails (type L)

Depth D2 mm	Width HP	Qty/PU piece	Part no.
160	84	2	**24561-051**
220	84	2	**24561-052**

Note

- ServicePLUS configuration from page 6.16

ServicePLUS see page 6.16

Subracks – europacPROKits

Kit, "flexible", shielded, for backplane mounting

06102008

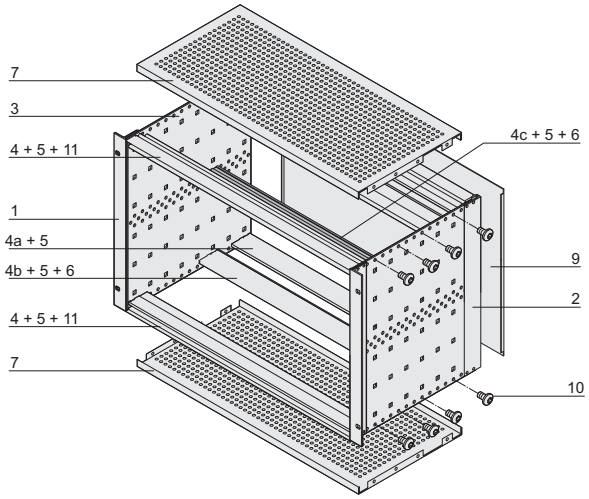

6 U

06102075

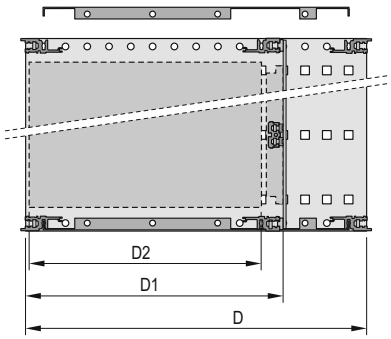

06113056

D = overall depth, D1 = insertion depth,
D2 = board depth = D1 - 15 mm

04400001

Rear horizontal rail for backplane mounting with insulation strip

- Subrack with side panel type F ("flexible"), 19" bracket is depth-adjustable
- Rear horizontal rail for backplane mounting with insulation strip
- Shielding typically 40 dB at 1 GHz, 30 dB at 2 GHz, assuming that the front is closed with shielded front panels
- Installed load up to 11 kg

Delivery comprises ((kit))

Item	Qty 3 U	Qty 6 U	Description
1	2	2	19" support bracket for **EMC textile gasket**
2	2	2	Rear corner profile for **EMC textile gasket**
3	2	2	Side panel type F
4	2	2	Front horizontal rail (L-KD)
4 a	2	2	Rear horizontal rail (L-KD)
4 b	2	2	Rear horizontal rail (L-ST) for backplane mounting with insulation strip
4 c	-	1	Centre horizontal rail (ST)
5	6	8	Threaded insert (pre-fitted)
6	2	4	Insulation strip, fixed
7	2	2	EMC cover plate
8	1	1	EMC gasketing material (pre-fitted)
9	1	1	Rear panel
10	1	1	Fixing material kit
11	2	2	Perforated strip (pre-fitted)
12	1	1	User manual

Order Information

Height U	Width HP	Depth D mm	Depth D1 mm	Part no.
3	84	235	175/235	**24563-142**
3	84	295	175/235/295	**24563-143**
3	84	355	175/235/295	**24563-144**
3	84	415	175/235/295	**24563-145**
3	84	475	175/235/295	**24563-146**
6	84	235	175/235	**24563-442**
6	84	295	175/235/295	**24563-443**
6	84	355	175/235/295	**24563-444**
6	84	415	175/235/295	**24563-445**
6	84	475	175/235/295	**24563-446**

Accessories

19" assembly kit (screw, washer, nut) (8 × screws, 8 × plastic washers, 8 × cage nuts)	**21100-435**

Guide rails (standard), ESD clips

Depth D2 mm	Qty/PU piece	Part no.
160	10	**24560-351**
220	10	**24560-353**
280	10	**24560-379**
340	10	**24560-380**
ESD clip for guide rails PU 50 pieces		**24560-255**

Note

- ServicePLUS configuration from page 6.16

ServicePLUS see page 6.16

Kit, 'heavy', unshielded, for backplane mounting

06102007

Without front handle

06111003

With front handle

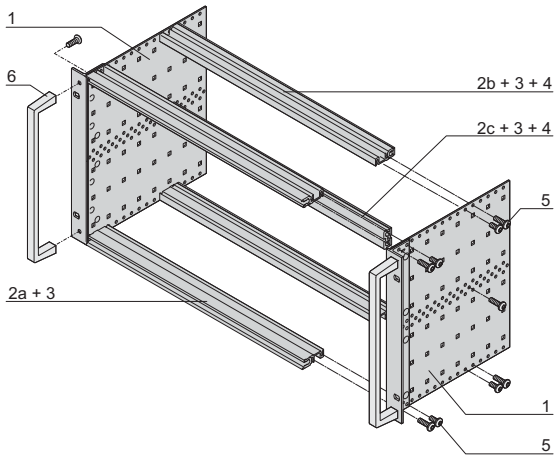

06111057

6 U

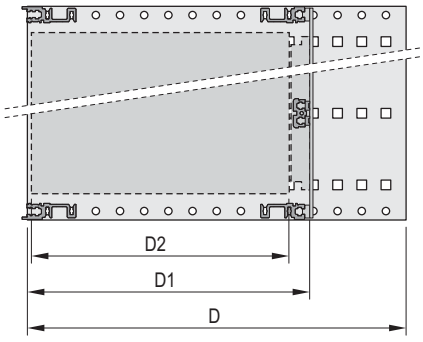

06108052

D = overall depth, D1 = insertion depth, D2 = board depth

04400001

Rear horizontal rail for backplane mounting with insulation strip

ServicePLUS see page 6.16

- Subrack with side panel type H ("heavy"), 19" bracket is firmly fixed to side panel (tox-cold welded)
- Rear horizontal rail for backplane mounting with insulation strip
- Shock and vibration resistance up to 5 g
- Installed load up to 15 kg
- Versions with/without front handles

NEW

Delivery comprises (Kit)

Item	Qty 3 U	Qty 6 U	Description
1	2	2	Side panel type H, Al, 2 mm, passivated, with 19" support bracket (tox-cold welded) for textile EMC gasket
2a	2	2	Front horizontal rail (H-KD)
2b	2	2	Rear horizontal rail (H-ST)
2c	-	1	Rear horizontal rail centre (H-ST)
3	4	6	Threaded insert, front and rear (pre-fitted)
4	2	4	Insulation strip (pre-fitted)
5	1	1	Fixing material kit, user manual
6	2	2	Front handle (on version with front handle only)

Order Information

Height U	Width HP	Depth D mm	Depth D1 mm	Part no. with front handle	Part no. without front handle
3	84	175	175	**24567-161**	**24563-161**
3	84	235	175/235	**24567-162**	**24563-162**
3	84	295	175/235/295	**24567-163**	**24563-163**
3	84	355	175/235/295/355	**24567-164**	**24563-164**
6	84	175	175	**24567-461**	**24563-461**
6	84	235	175/235	**24567-462**	**24563-462**
6	84	295	175/235/295	**24567-463**	**24563-463**
6	84	355	175/235/295/355	**24567-464**	**24563-464**

Accessories

19" assembly kit (screw, washer, nut) (8 × screws, 8 × plastic washers, 8 × cage nuts)	**21100-435**

Guide rails (standard), ESD clips

Depth D2 mm	Qty/PU piece	Part no.
160	10	**24560-351**
220	10	**24560-353**
280	10	**24560-379**
340	10	**24560-380**

ESD clip for guide rails PU 50 pieces	**24560-255**
Torx panhead screw , for extra bolting of the guide rails, 2.5 × 9.3, zinc-plated, PU 100 pieces; torque max. 0.2 Nm	**24560-141**

Cover plates for bolting to side panel

Depth D2 mm	Width HP	Qty/PU piece	Part no.
160	84	2	**24560-078**
220	84	2	**24560-079**
280	84	2	**24560-080**
340	84	2	**24560-081**

Note

- ServicePLUS configuration from page 6.16

Subracks – europac PRO Kits

Kit, "heavy", shielded, for backplane mounting

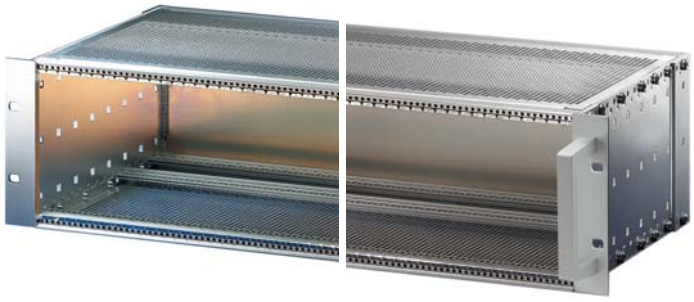

06102008 06111001

Without front handle With front handle

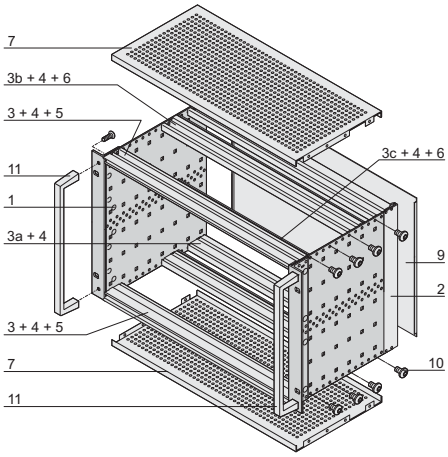

6 U 06111058

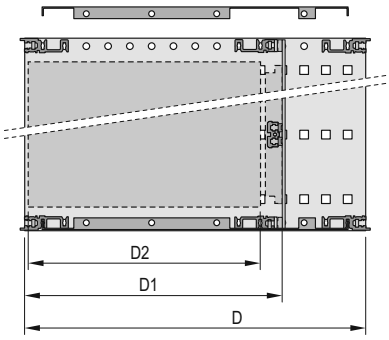

06113055

D = overall depth, D1 = insertion depth,
D2 = board depth = D1 - 15 mm

04400001

Rear horizontal rail for backplane mounting with insulation strip

ServicePLUS see page 6.16

- Subrack with side panel type H ("heavy"), 19" bracket is firmly fixed to side panel (tox-cold welded)
- Rear horizontal rail for backplane mounting with insulation strip
- Shielding typically 40 dB at 1 GHz, 30 dB at 2 GHz, assuming that the front is closed with sealed front panels
- Shock and vibration resistance up to 5 g
- Installed load up to 15 kg
- Versions with/without front handles

NEW

Delivery comprises (Kit)

Item	Qty 3 U	Qty 6 U	Description
1	2	2	Side panel type H, Al, 2 mm, passivated, with 19" support bracket (tox-cold welded); for textile EMC gasket
2	2	2	Rear corner profile for textile EMC gasket
3	2	2	Front horizontal rail (H-KD)
3 a	2	2	Rear horizontal rail (H-KD)
3 b	2	2	Rear horizontal rail (H-ST)
3 c	-	1	Rear horizontal rail centre (ST)
4	6	8	Threaded insert (pre-fitted)
5	2	2	Perforated strip (pre-fitted)
6	2	4	Insulation strip (pre-fitted)
7	2	2	EMC cover plate
8	1	1	EMC gasketing material (pre-fitted)
9	1	1	EMC rear panel
10	1	1	Fixing material kit, user manual
11	2	2	Front handle (on version with front handle only)

Order Information

Height U	Width HP	Depth D mm	Depth D1 mm	Part no. with front handle	Part no. without front handle
3	84	235	175/235	**24567-172**	**24563-172**
3	84	295	175/235/295	**24567-173**	**24563-173**
3	84	355	175/235/295	**24567-174**	**24563-174**
6	84	235	175/235	**24567-472**	**24563-472**
6	84	295	175/235/295	**24567-473**	**24563-473**
6	84	355	175/235/295	**24567-474**	**24563-474**

Accessories

19" assembly kit (screw, washer, nut) (8 × screws, 8 × plastic washers, 8 × cage nuts)	**21100-435**

Guide rails (standard), ESD clips

Depth D2 mm	Qty/PU piece	Part no.
160	10	**24560-351**
220	10	**24560-353**
280	10	**24560-379**

ESD clip for guide rails PU 50 pieces	**24560-255**
Torx panhead screw , for extra bolting of the guide rails, 2.5 × 9.3, zinc-plated, PU 100 pieces; torque max. 0.2 Nm	**24560-141**

Note

- ServicePLUS configuration from page 6.16

Kit, for CompactPCI, for backplane mounting, without rear I/O, shielded

06102009

- Subrack with side panel type F ("flexible") for CompactPCI plug-in units with high insertion and withdrawal forces
- Rear horizontal rail for backplane mounting with insulation strip
- Shielding typically 40 dB at 1 GHz, 30 dB at 2 GHz, assuming that the front is covered with shielded front panels
- Installed load up to 11 kg

Delivery comprises (kit)

Item	Qty 3 U	Qty 6 U	Description
1	2	2	19" support bracket for **EMC textile gasket**
2	2	2	Rear corner profile for **EMC textile gasket**
3	2	2	Side panel type F
4	1	-	Front horizontal rail (H-KD)
4 a	1	2	Front horizontal rail IEEE (H-LD)
4 b	2	2	Rear horizontal rail (L-KD)
4 c	2	2	Rear horizontal rail (H-ST), for backplane mounting with insulation strip
4 d	-	1	Centre horizontal rail (ST)
5	6	8	Threaded insert (pre-fitted)
6	2	4	Insulation strip (pre-fitted)
7	2	2	EMC cover plate
8	1	1	EMC gasketing material (pre-fitted)
9	1	1	Rear panel
10	1	1	Fixing material kit
11	2	2	Perforated strip (pre-fitted in item 4+4a)
12	1	1	User manual

6 U

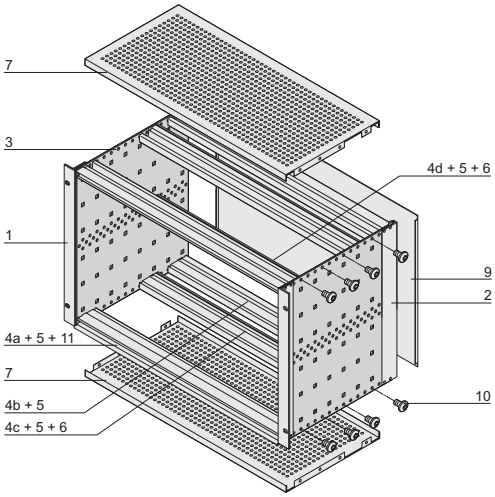

06102078

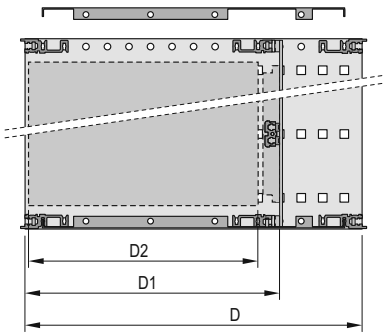

06113055

D = overall depth, D1 = insertion depth,
D2 = board depth = D1 - 15 mm

Order Information

Height U	Width HP	Depth D mm	Depth D1 mm	Part no.
3	84	235	175	**24563-152**
6	84	235	175	**24563-452**

Accessories

Guide rail with coding, red 160 mm deep, PBT, UL 94 V-0, groove width 2 mm, PU 10 pieces	**24560-356**
Guide rail with coding, grey 160 mm deep, PBT, UL 94 V-0, groove width 2 mm, PU 10 pieces	**24560-358**
Guide rail with coding, green, offset 160 mm deep, PBT, UL 94 V-0, groove width 2 mm, PU 10 pieces	**24560-359**
ESD clip for guide rails PU 50 pieces	**24560-255**
ESD clip for alignment pin of CPCI/VME64x handle PU 50 pieces	**24560-256**
Torx panhead screw 2.5 × 9.3, zinc-plated, PU 100 pieces; torque max. 0.2 Nm	**24560-141**
Coding peg PC, UL 94 V-0, RAL 7035, PU 100 pieces	**20817-501**
19" assembly kit (screw, washer, nut) (8 × screws, 8 × plastic washers, 8 × cage nuts)	**21100-435**

Note

- ServicePLUS configuration from page 6.16

04400001

Rear horizontal rail for backplane mounting with insulation strip

ServicePLUS see page 6.16

Subracks – europacPROKits

Kit, for CompactPCI, for backplane mounting, for rear I/O, shielded

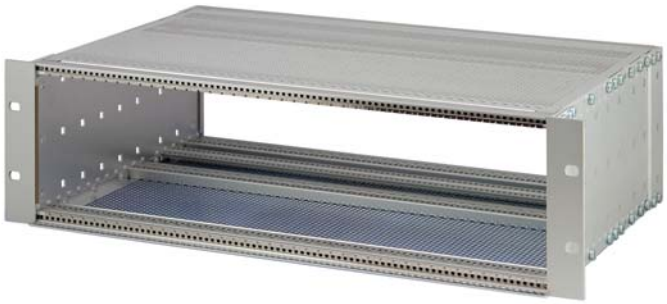

06108007

- Subrack with side panel type F ("flexible") for CompactPCI plug-in units with high insertion and withdrawal forces
- For rear I/O boards (depth 80 mm)
- Rear horizontal rail for backplane mounting with insulation strip
- Shielding typically 40 dB at 1 GHz, 30 dB at 2 GHz, assuming that the front is covered with shielded front panels
- Installed load up to 11 kg

6 U

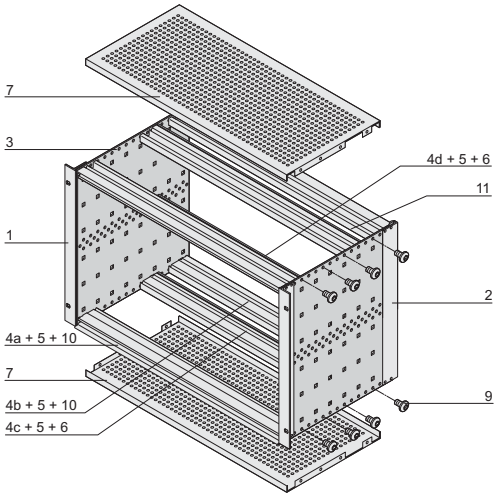

06105076

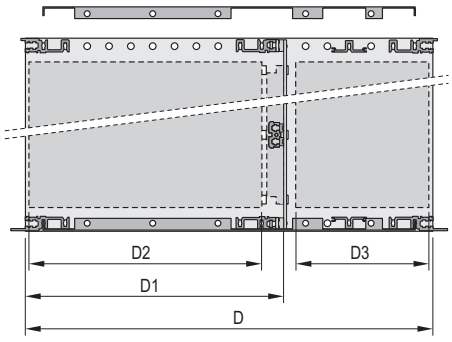

06108075

D = overall depth, D1 = insertion depth,
D2 = board depth = D1 - 15 mm, D3 = rear I/O board depth

04400001

Rear horizontal rail for backplane mounting with insulation strip

Delivery comprises (kit)

Item	Qty 3 U	Qty 6 U	Description
1	2	2	19" support bracket for **EMC textile gasket**
2	2	2	Rear corner profile for **EMC textile gasket**
3	2	2	Side panel type F
4	1	-	Front horizontal rail (H-KD)
4 a	1	2	Front horizontal rail IEEE (H-LD)
4 b	2	2	Rear horizontal rail (H-KD)
4 c	2	2	Rear horizontal rail (H-ST), with insulation strip for backplane mounting
4 d	-	1	Centre horizontal rail (ST)
5	6	8	Threaded insert (pre-fitted)
6	2	4	Insulation strip, fixed
7	2	2	EMC cover plate
8	1	1	EMC gasketing material (pre-fitted)
9	1	1	Fixing material kit
10	2	2	Perforated strip (pre-fitted)
11	2	2	Horizontal rail type AB
12	1	1	User manual

Order Information

Height U	Width HP	Depth D mm	Depth D1 mm	Depth D3 mm	Part no.
3	84	275	175	80	**24563-157**
6	84	275	175	80	**24563-457**

Accessories

Guide rail with coding, red 160 mm deep, PBT, UL 94 V-0, groove width 2 mm, PU 10 pieces	**24560-356**
Guide rail with coding, grey 160 mm deep, PBT, UL 94 V-0, groove width 2 mm, PU 10 pieces	**24560-358**
Guide rail with coding, green, offset 160 mm deep, PBT, UL 94 V-0, groove width 2 mm, PU 10 pieces	**24560-359**
ESD clip for guide rails PU 50 pieces	**24560-255**
ESD clip for alignment pin of CPCI/VME64x handle PU 50 pieces	**24560-256**
Guide rail with coding, red 70 mm deep, PU 10 pieces	**24560-355**
Guide rail with coding, grey 70 mm deep, PU 10 pieces	**24560-360**
Torx panhead screw 2.5 × 9.3, zinc-plated, PU 100 pieces; torque max. 0.2 Nm	**24560-141**
Coding peg PC, UL 94 V-0, RAL 7035, PU 100 pieces	**20817-501**
19" fixing material kit (screw, washer, nut) (8 × screws, 8 × plastic washers, 8 × cage nuts)	**21100-435**

Note

- ServicePLUS configuration from page 6.16

ServicePLUS see page 6.16

Subracks – europac PRO ServicePLUS

configuration

Components can be varied and combined freely

Simple. Fast. To the ideal product.

- Configuration tables from page 6.19
- Online configuration: www.schroff.co.uk/configuration

assembly

Fitting of all mechanical, electrical and electronic components by our specialists

Assembled by professionals. Double benefit!

- Professional and reliable from quantity 1
- Ready for despatch within 5 working days

modification

Custom drillings, cut-outs and special colours for off-the-shelf products

Small changes. Large impact.

- Custom modifications from quantity 1
- Ready for despatch within 10 working days

solution

Integration and custom developments

Simple. Fast. From one source.

- Special sizes (depth and width)
- Individual heat dissipation concepts
- Ready for despatch within 10 working days

express

Delivery time to customer's request

When fast has to be faster.

- Express logistics

academy

Knowledge transfer and partnership

Knowledge. Sharing. Partnerships.

- Seminars, CAD drawings, test reports, user reports

Subracks – europac PRO ServicePLUS

Overview of individual components for shielded or unshielded subracks

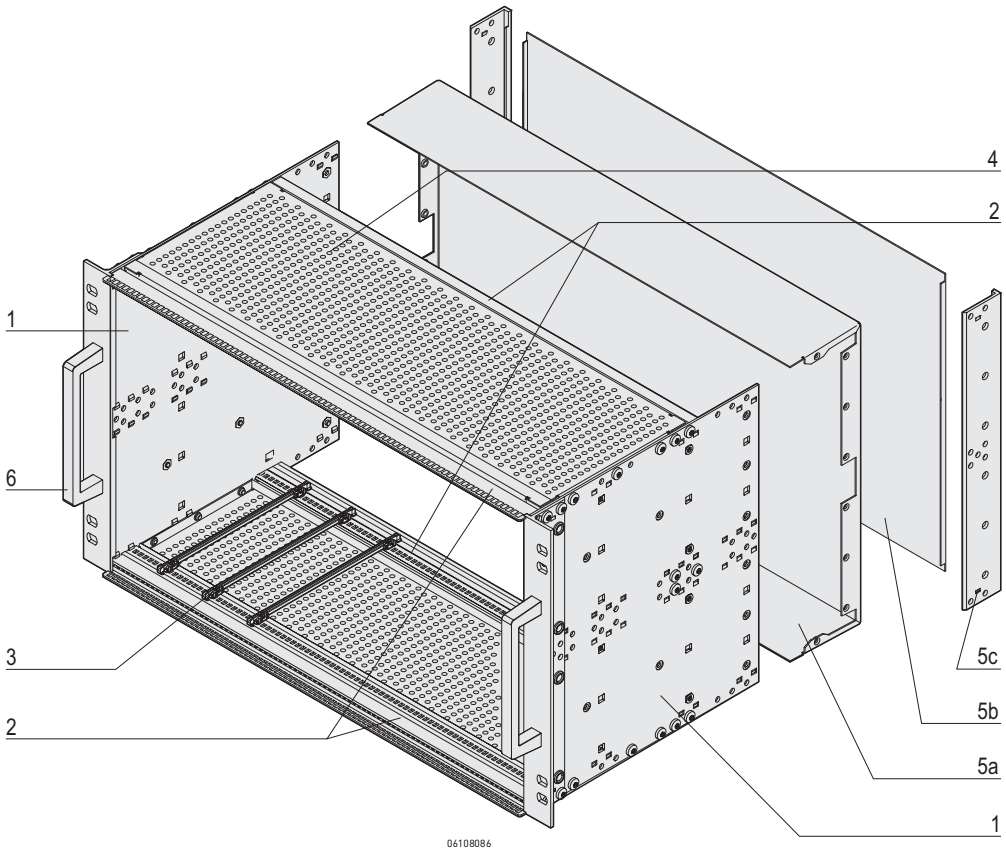

Item	Description	Description	page
Item 1	Side panel	Establishes the height and depth of the subrack; Al, 2 mm, with universal hole positions for assembly of accessories. Three versions: The "flexible" one with separate 19" brackets as well as two others with integrated 19" brackets for "light" and "heavy" applications.	6.21
Item 2	Horizontal rail	Establishes the width of the subrack; Al extrusion, with defined hole positions for guide rails, grooves for threaded inserts, M4 thread, functional rail shapes, basically differing with regard to their mechanical loading capacity: "light" (load up to 7.5 kg) and "heavy" (load > 7.5 kg).	6.29
Item 3	Guide rails	Act as interface between subracks and boards, for different board formats, are available in plastic or metal, optionally codable and can be fitted with ESD clips to allow electrostatic discharge, also optionally.	6.37
Item 4	Cover plates	Provide mechanical protection and/or EMC shielding and are perforated.	6.44
Item 5	Rear/front	Rear hood (5a) or front panel (5b) with corner profile (5c) act as support for EMC shielding gaskets used in conjunction with shielded front panels. Note: Rear hood and corner profile cannot be fitted simultaneously.	6.49
Item 6	Handles	Can be mounted on the 19" brackets.	6.27
–	EMC shielding (without illustration)	Extensive component range for specific shielding of subracks with respect to their application.	6.54
–	Interior assemblies (without illustration)	Universal assemblies, e.g. for horizontal and vertical assembly and for mounting plates.	6.59

Subrack dimensions

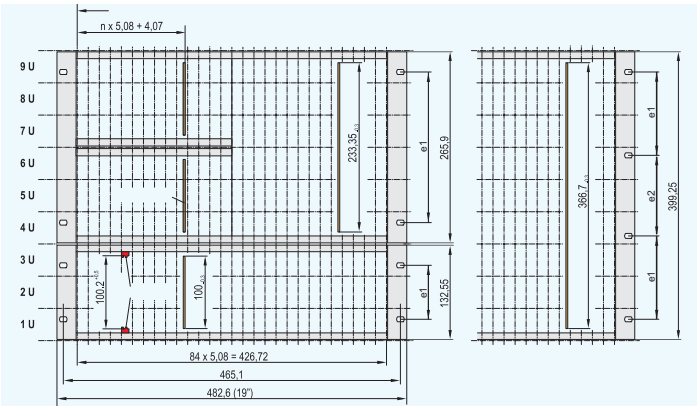

20304051

- Dimensions in accordance with international standards EC 60297-3-100, IEEE 1101.1/.10/.11; please see the Schroff Standards Summary for details
- Side panels
  - Aluminium, 2 mm
  - Round holes for mounting horizontal rails (depth grid 15 mm)
  - Impressions on the inner side of the side panel act as an anti-rotation guard and positioning aid for the horizontal rails
  - Square holes (6 x 6 mm) provide universal fixing for components such as backplane shielding; version without square holes available on request

06197003

Depth grid

The depth grid is 15 mm, the mounting holes in the side panel are decisive for the configurability of individual components; thus any combination of various individual parts is possible

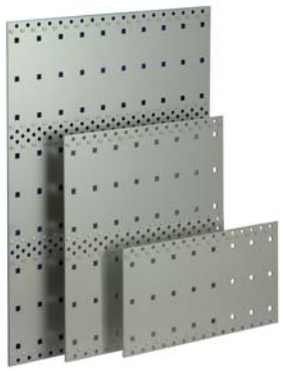

06108008

Side panel 3 U, 6 U and 9 U

3 and 6 U side panels have the same hole positions (the 6 U is a doubling vertically of the 3 U); thus subdivisions can be made in the vertical dimension (6 U: 2 x 3 U; 9 U: 3 x 3 U)

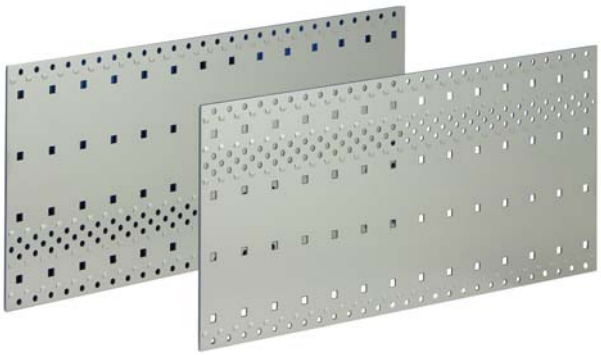

06108011

Side panel 4 U

4 U side panels have the same hole positions as 3 U and additionally 1 U (above or beneath the 3 U installation); this height allows the construction of a 3 U unit with 1 U clearance for cabling or airflow

Subracks – europac PRO ServicePLUS

Side panels

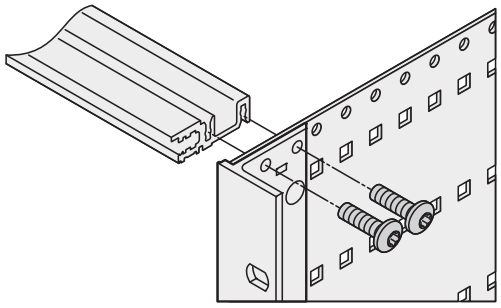

06108062

Side panel - horizontal rail assembly

- Aluminium
- Round holes for mounting horizontal rails (depth grid 15 mm)
- Impressions on the inner side of the side panel act as an anti-rotation guard and positioning aid for the horizontal rails
- Square holes (6 x 6 mm) provide universal fixing for components such as backplane shielding; version without square holes available on request
- Only one type of screw driver is needed for the assembly (torx panhead screw, M4 x 14; torque side panel - horizontal rail 2.4 Nm; torque side panel - cover plate 1.3 Nm)
- 4 versions of the side panel:
  - Type F = flexible
  - Type H = heavy
  - Type L = light
  - Type R = rugged

Note

- Type R - rugged side panels see "Rugged Subracks" section, page 6.97

06197003

Type F (flexible)

- Universal version: 19" bracket (please order separately) can be fitted variably to front, rear or depth-offset
- Heights: 3, 4, 6 and 9 U
  Depths: 175, 235, 275, 277.75, 295, 355, 415 and 475 mm;
  Other dimensions on request
- 2 EMC shielding concepts for the front/rear: stainless steel or textile EMC gasket
- Installed load up to 11 kg

06197004

Type H (heavy)

- 19" bracket is tox-cold welded to side panel; particularly designed for mechanically demanding environments (vibration resistance, applications requiring high levels of shock and vibration, e.g. IEC 61587-2)
- Heights: 3 and 6 U
  Depths: 175, 235, 295 and 355 mm
  Other dimensions on request
- 2 EMC shielding concepts for the front/rear: with stainless steel or textile EMC gasekt
- Installed load up to 15 kg

06197002

Type L (light)

- Side panel with moulded 19" bracket, for standard applications, unshielded
- Particularly cost-effective version (not suitable for EMC applications)
- Heights: 3 and 6 U
  Depths: 175, 235 and 295 mm
  Other dimensions on request
- Installed load up to 7.5 kg

Side panels type F for stainless steel gasket

Order Information

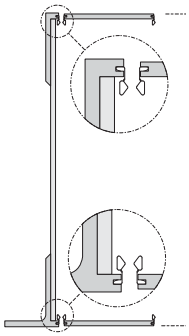

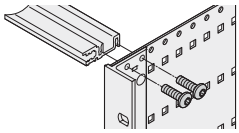

06108070 06108062

Height U	Depth mm		Side panel type F	19" bracket without handle holes	19" bracket with handle holes	19" bracket depth-adjustable	EMC gasket (stainless steel)	Rear angle	Side panel connection
			06197003	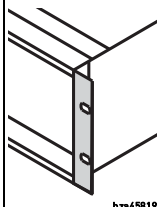 bzm45819	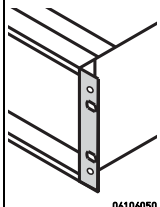 06106050	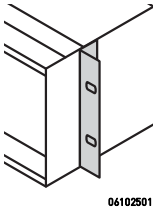 06102501	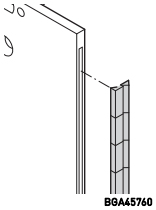 BGA45760	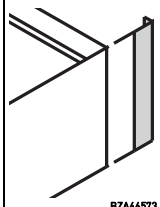 BZA46573	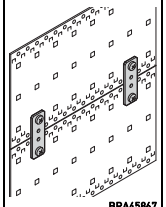 BPA45867
			without 19" bracket, Al, 2 mm, passivated, please order 19" bracket and corner profile separately	with lateral grooves for stainless steel EMC gasket, Al extrusion, rear side etched, front anodised	with lateral grooves for stainless steel EMC gasket, Al extrusion, rear side etched, front anodised please order front handles separately, see page 6.27	Al extrusion, passivated	inserted laterally into the grooves of the front panel	Al extrusion, surface clear passivated; with lateral grooves for stainless steel EMC gasekt; rear hood cannot be mounted simultaneously	Zn die-cast, incl. fixing material kit, for connecting two by two side panels (on top of each other)
U	mm		1 piece	PU 1 pair	PU 1 pair	PU 1 pair	PU 10 pieces	PU 1 pair	PU 4 pieces
3	175		34560-185	24560-197	24560-198	24560-199	21101-705	24561-198	21101-954
3	235		34560-187						
3	275	1)	34579-300						
3	277.75	2)	34579-002						
3	295		34560-189						
3	355		34560-191						
3	415		34560-193						
3	475		34560-195						
4	175	3)	34560-285	24560-297	24560-298	24560-299	21101-713	24561-298	21101-954
4	235	3)	34560-287						
4	295	3)	34560-289						
4	355	3)	34560-291						
4	415	3)	34560-293						
4	475	3)	34560-295						
6	175		34560-485	24560-497	24560-498	24560-499	21101-707	24561-498	21101-954
6	235		34560-487						
6	275	1)	34579-038						
6	277.75	2)	34579-012						
6	295		34560-489						
6	355		34560-491						
6	415		34560-493						
6	475		34560-495						
6	970		34560-496						
9	175		34560-785	24560-797	24560-798	24560-799	21101-709	24561-798	21101-954
9	235		34560-787						
9	295		34560-789						
9	355		34560-791						
9	415		34560-793						
Screw, M4 x 14, PU 100 pieces, for fastening horizontal rail to side panel			24560-130	24560-130	24560-130	24560-130	–	24560-130	–
Screw, M4 x 10, required if guide rails are screwed to slot 1, PU 100 pieces			24560-155	24560-155	24560-155	24560-155	–	24560-155	–

1) CompactPCI 2) VME64x 3) Grid holes of side panel 3 + 1 U

■ View of side panels 3, 4, 6, 9 U see page 6.20

Subracks – europac PRO ServicePLUS

Side panels type F for textile EMC gasket

Order Information

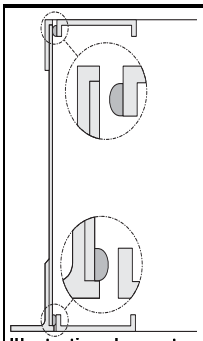

Illustration shows standard assembly, not VME or CompactPCI bus with rear I/O

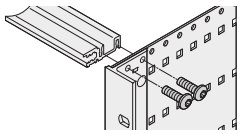

06108054 06108062

Height U	Depth mm		Side panel type F	19" bracket without handle holes	19" bracket with handle holes	19" bracket depth-adjustable	EMC gasket (textile)	Rear angle	Side panel connection
			06197003	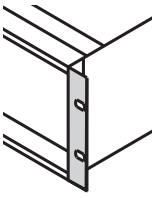 bza45819	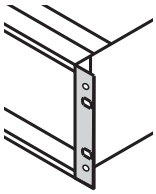 06106050	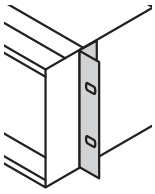 06102501	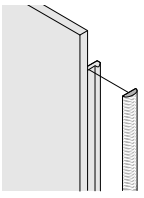 04602054	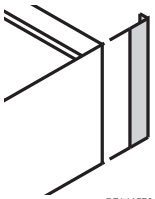 BZA46573	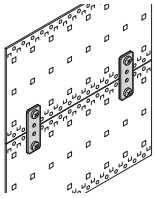 BPA45867
			without 19" bracket, Al, 2 mm, passivated, please order 19" bracket and corner profile separately	Al extrusion for textile EMC gasket rear side etched, front anodised	Al extrusion for textile EMC gasket, rear side etched, front anodised, please order front handles separately, see page 6.27	Al extrusion, passivated	textile gasket, core: foam, sleeve: textile cladding with CuNi coating, UL 94 V-0	Al extrusion, etched; for textile EMC gasket	Zn die-cast, incl. fixing material kit, for connecting two by two side panels (on top of each other)
			1 piece	PU 1 pair	PU 1 pair	PU 1 pair	PU 10 pieces	PU 1 pair	PU 4 pieces
3	175		**34560-185**	**24564-197**	**24564-198**	**24560-199**	**21101-853**	**24564-199**	**21101-954**
3	235		**34560-187**						
3	275	1)	**34579-300**						
3	277.75	2)	**34579-002**						
3	295		**34560-189**						
3	355		**34560-191**						
3	415		**34560-193**						
3	475		**34560-195**						
4	175	3)	**34560-285**	**24564-297**	**24564-298**	**24560-299**	**21101-858**	**24564-299**	**21101-954**
4	235	3)	**34560-287**						
4	295	3)	**34560-289**						
4	355	3)	**34560-291**						
4	415	3)	**34560-293**						
4	475	3)	**34560-295**						
6	175		**34560-485**	**24564-497**	**24564-498**	**24560-499**	**21101-855**	**24564-499**	**21101-954**
6	235		**34560-487**						
6	275	1)	**34579-038**						
6	277.75	2)	**34579-012**						
6	295		**34560-489**						
6	355		**34560-491**						
6	415		**34560-493**						
6	475		**34560-495**						
6	970		**34560-496**						
9	175		**34560-785**	**24564-797**	**24564-798**	**24560-799**	**21101-859**	**24564-799**	**21101-954**
9	235		**34560-787**						
9	295		**34560-789**						
9	355		**34560-791**						
9	415		**34560-793**						
Screw, M4 x 14, PU 100 pieces, for fastening horizontal rail to side panel			**24560-130**	**24560-130**	**24560-130**	**24560-130**	–	**24560-130**	–
Screw, M4 x 10, required if guide rails are screwed to slot 1, PU 100 pieces			**24560-155**	**24560-155**	**24560-155**	**24560-155**	–	**24560-155**	–

1) CompactPCI 2) VME64x 3) Grid holes of side panel 3 + 1 U

Side panels type H for stainless steel EMC gasket

Order Information

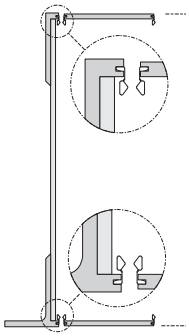 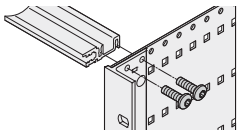 06108070 06108062	Side panel type H for stainless steel EMC gasket			Rear angle	Side panel connection
	without handle holes	with handle holes	EMC gasket (stainless steel)		
	06197004	06107001	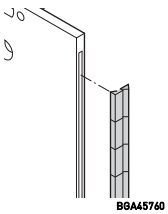 BGA45760	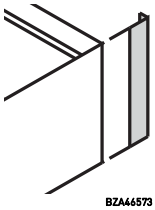 BZA46573	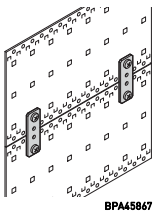 BPA45867
	for high mechanical demands, 19" bracket, tox-cold welded, Al, 2 mm, clear passivated, front anodised	for high mechanical demands, 19" bracket, tox-cold welded, Al, 2 mm, clear passivated, front anodised, please order front handles separately see page 6.27	inserted laterally into the grooves of the front panel	Al extrusion, surface clear passivated; with lateral grooves for stainless steel EMC gasekt; rear hood cannot be mounted simultaneously	Zn die-cast, incl. fixing material kit, for connecting two by two side panels (on top of each other)
Height U	Depth mm	PU 1 pair	PU 1 pair	PU 10 pieces	PU 1 pair	PU 4 pieces
3	175	**24566-125**	**24567-125**			
3	235	**24566-127**	**24567-127**			
3	275 1)	–	–			
3	277.75 2)	–	–	**21101-705**	**24561-198**	**21101-954**
3	295	**24566-129**	**24567-129**			
3	355	**24566-131**	**24567-131**			
3	415	–	–			
3	475	–	–			
4	175 3)					
4	235 3)					
4	295 3)					
4	355 3)	–	–	–	–	–
4	415 3)					
4	475 3)					
6	175	**24566-425**	**24567-425**			
6	235	**24566-427**	**24567-427**			
6	275 1)	–	–			
6	277.75 2)	–	–			
6	295	**24566-429**	**24567-429**	**21101-707**	**24561-498**	**21101-954**
6	355	**24566-431**	**24567-431**			
6	415	–	–			
6	475	–	–			
6	970	–	–			
9	175					
9	235					
9	295					
9	355	–	–	–	–	–
9	415					
Screw, M4 x 14, PU 100 pieces, for fastening horizontal rail to side panel		**24560-130**	**24560-130**	–	**24560-130**	–
Screw, M4 x 10, required if guide rails are screwed to slot 1, PU 100 pieces		**24560-155**	**24560-155**	–	**24560-155**	–

1) CompactPCI 2) VME64x 3) Grid holes of side panel 3 + 1 U

Subracks – europac PRO ServicePLUS

Side panels type H for textile EMC gasket

Order Information

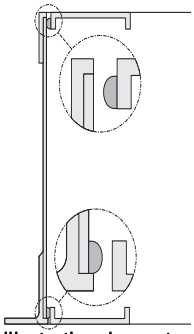

Illustration shows standard assembly, not VME or CompactPCI bus with rear I/O

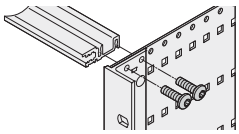

06108070 06108062

Height	Depth	Side panel type H for textile EMC gasket without handle holes	Side panel type H for textile EMC gasket with handle holes	EMC gasket (textile)	Rear angle	Side panel connection
		06197004	06107001	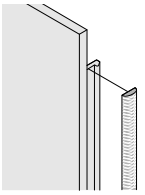 04602054	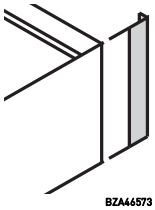 BZA46573	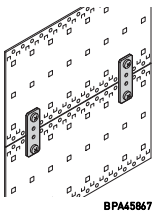 BPA45867
		for high mechanical demands, 19" bracket, tox-cold welded, Al, 2 mm, clear passivated, front anodised	for high mechanical demands, 19" bracket, tox-cold welded, Al, 2 mm, clear passivated, front anodised, please order front handles separately see page 6.27	textile gasket, core: foam, sleeve: textile cladding with CuNi coating, UL 94 V-0	Al extrusion, etched; for textile EMC gasket	Zn die-cast, incl. fixing material kit, for connecting two by two side panels (on top of each other)
U	mm	PU 1 pair	PU 1 pair	PU 10 pieces	PU 1 pair	PU 4 pieces
3	175	**24564-145**	**24566-145**	**21101-853**	**24564-199**	**21101-954**
3	235	**24564-147**	**24566-147**			
3	275 1)	–	–			
3	277.75 2)	–	–			
3	295	**24564-149**	**24566-149**			
3	355	**24564-151**	**24566-151**			
3	415	–	–			
3	475	–	–			
4	175 3)	–	–	–	–	–
4	235 3)					
4	295 3)					
4	355 3)					
4	415 3)					
4	475 3)					
6	175	**24564-445**	**24566-445**	**21101-855**	**24564-499**	**21101-954**
6	235	**24564-447**	**24566-447**			
6	275 1)	–	–			
6	277.75 2)	–	–			
6	295	**24564-449**	**24566-449**			
6	355	**24564-451**	**24566-451**			
6	415	–	–			
6	475	–	–			
6	970	–	–			
9	175	–	–	–	–	–
9	235					
9	295					
9	355					
9	415					
Screw, M4 x 14, PU 100 pieces, for fastening horizontal rail to side panel		**24560-130**	**24560-130**	–	**24560-130**	–
Screw, M4 x 10, required if guide rails are screwed to slot 1, PU 100 pieces		**24560-155**	**24560-155**	–	**24560-155**	–

1) CompactPCI 2) VME64x 3) Grid holes of side panel 3 + 1 U

Side panels type L

Order Information

			Side panel type L	Front cover	Collar screw with slot for assembly of front cover	Sleeves for assembly of front cover	Side panel connection
			06197002	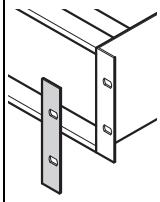 BZA45810	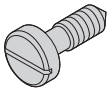 06708055	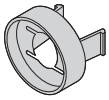 00508056	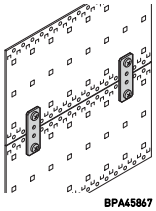 BPA45867
			Al, 2 mm, passivated	for decorative finish of 19" bracket, Al, 2 mm, anodised	M6 x 16, St, nickel-plated	PPE, black	Zn die-cast, incl. fixing material kit, for connecting two by two side panels (on top of each other)
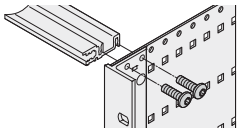 06108062							
Height U	Depth mm		1 piece		PU 100 pieces	PU 100 pieces	PU 4 pieces
3	175		34561-185	34561-197	21100-565	21100-566	21101-954
3	235		34561-187				
3	275	1)	–				
3	277.75	2)	–				
3	295		34561-189				
3	355		–				
3	415		–				
3	475		–				
4	175	3)	–	–	–	–	–
4	235	3)					
4	295	3)					
4	355	3)					
4	415	3)					
4	475	3)					
6	175		34561-485	34561-497	21100-565	21100-566	21101-954
6	235		34561-487				
6	275	1)	–				
6	277.75	2)	–				
6	295		34561-489				
6	355		–				
6	415		–				
6	475		–				
6	970		–				
9	175		–	–	–	–	–
9	235						
9	295						
9	355						
9	415						
Screw, M4 x 14, PU 100 pieces, for fastening horizontal rail to side panel			24560-130	–	–	–	–
Screw, M4 x 10, required if guide rails are screwed to slot 1, PU 100 pieces			24560-155	–	–	–	–

1) CompactPCI 2) VME64x 3) Grid holes of side panel 3 + 1 U

Subracks – europac PRO ServicePLUS

Front handles, wall-mounting brackets

Order Information

Height U	Depth mm	H mm	E mm	Front handle clear anodised 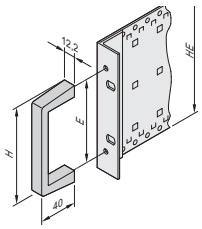 06102068 Al extrusion, anodised load-carrying capacity 30 kg 1 piece (SPQ 10)[1)]	Front handle black anodised 1 piece (SPQ 10)[1)]	Universal front handle 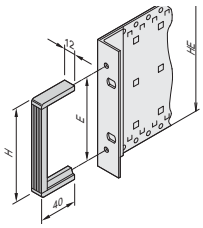 06102069 3 parts: Al extrusion, clear anodised, 2 end pieces, plastic, PA, black; width 12 mm, depth 40 mm load-carrying capacity 10 kg 1 piece (SPQ 10)[1)]	Wall-mounting bracket 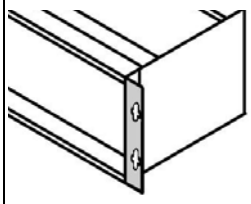 06104063 Al, 2.5 mm, passivated; bolted to subrack in place of the 19" bracket PU 1 pair
3	175	102	88.0	**10501-005**	**10501-026**	**10502-057**	**24562-197**
3	235	102	88.0				
3	275	102	88.0				
3	277.75	102	88.0				
3	295	102	88.0				
3	355	102	88.0				
3	415	102	88.0				
3	475	102	88.0				
4	175	146	133.4	**10501-018**	–	**10502-060**	24562-297
4	235	146	133.4				
4	295	146	133.4				
4	355	146	133.4				
4	415	146	133.4				
4	475	146	133.4				
6	175	249	235.0	**10501-008**	**10501-029**	**10502-065**	**24562-497**
6	235	249	235.0				
6	275	249	235.0				
6	277.75	249	235.0				
6	295	249	235.0				
6	355	249	235.0				
6	415	249	235.0				
6	475	249	235.0				
6	970	249	235.0				
9	175	249	235.0	**10501-008**	**10501-029**	**10502-065**	24562-797
9	235	249	235.0				
9	295	249	235.0				
9	355	249	235.0				
9	415	249	235.0				
Screw M5 x 12, PU 100 pieces				**24560-183**	**24560-183**	**24560-183**	–
Screw M5 x 12, PU 4 pieces				**24560-182**	**24560-182**	**24560-182**	–
Screw, M4 x 14, PU 100 pieces				–	–	–	**24560-130**

1) SPQ (standard pack quantity): Part number includes 1 piece, but delivery is exclusively made in standard pack quantity (SPQ); please order at least the SPQ quantity or a multiple

Horizontal rails

light

heavy

rugged

- Aluminium profile, surface anodised, conductive contact surfaces for EMC gaskets
- The horizontal rail is marked with sequential numbering (for sizes > 28 HP) to facilitate positioning of the guide rails
- Horizontal rails are fixed to the side panel using M4 bolts with torx 20 drive
- There are 3 different horizontal rails for different loading levels
  - light, for up to 7.5 kg
  - heavy, for 7.5 kg to 15 kg
  - rugged, for 15 kg to approx. 60 kg

Mounting position of the horizontal rails

	PCB as deep as side panel front rear	Cabling space behind backplane front rear	Rear I/O installation (CompactPCI, VME64x applications) front rear
3 U	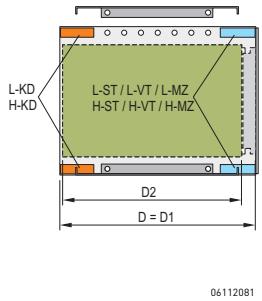	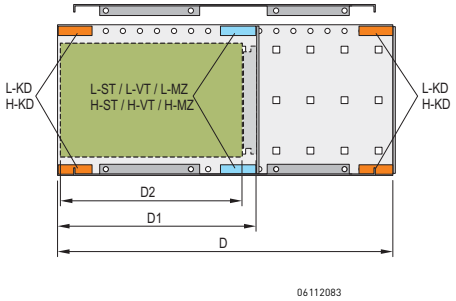	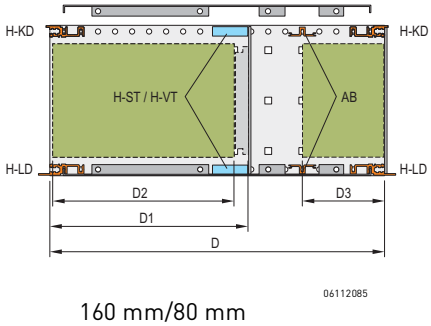
	160, 220, 280 mm, ...	160, 220, 280 mm, ...	160 mm/80 mm
6 U = 3 U + 3 U	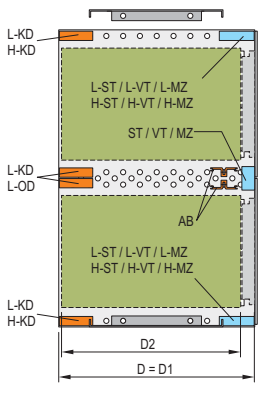	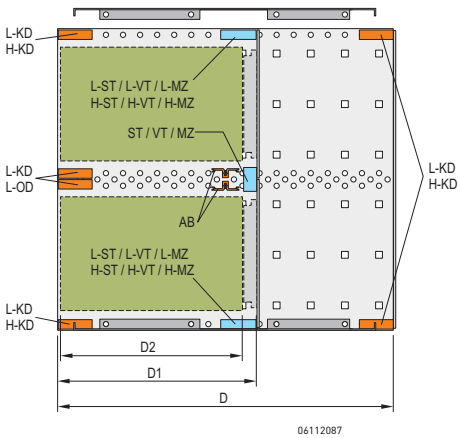	
	160, 220, 280 mm, ...	160, 220, 280 mm, ...	
6 U	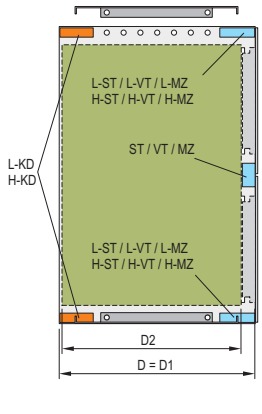	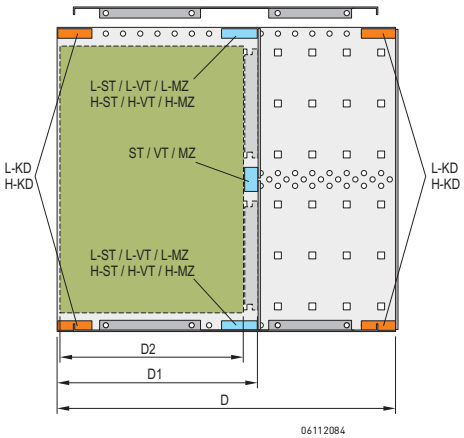	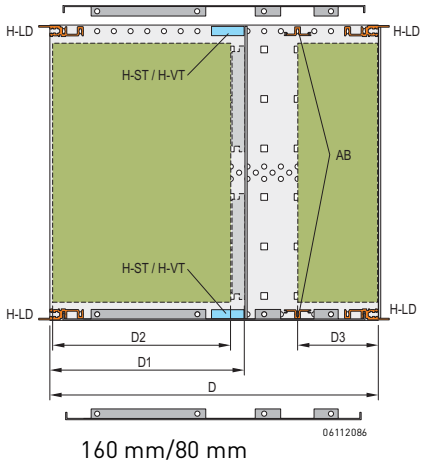
	160, 220, 280 mm, ...	160, 220, 280 mm, ...	160 mm/80 mm

Subracks – europac PRO ServicePLUS

Front horizontal rails

Assembly 3 U, 2 x 3 U, 6 U

"light" (L)

06197007

"heavy" (H)

06197008

"heavy" (H)

06197009

3 U/6 U

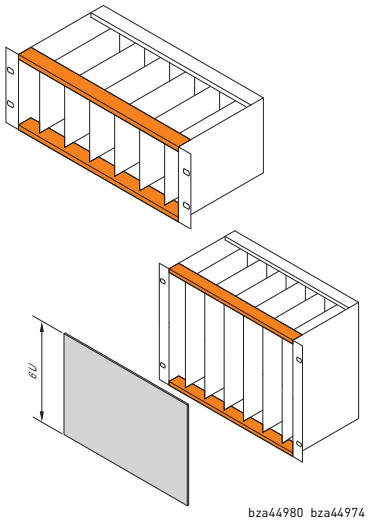

bza44980 bza44974

Short lip

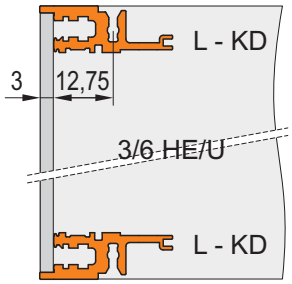

06105060

Short lip

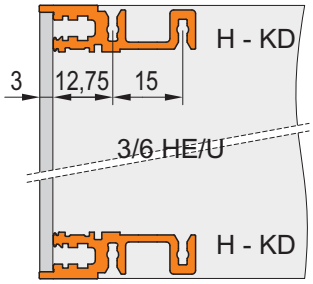

06105061

Long lip

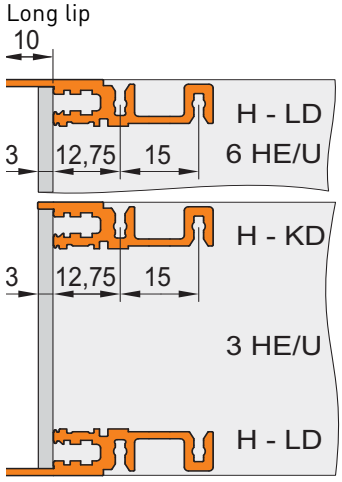

06108063

2 x 3 U

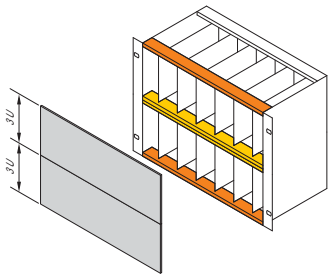

bza44972

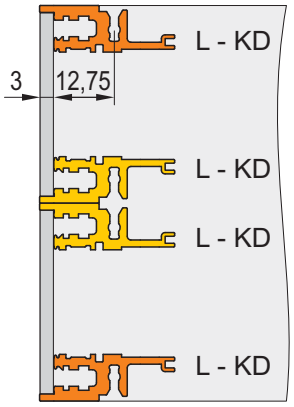

06105062

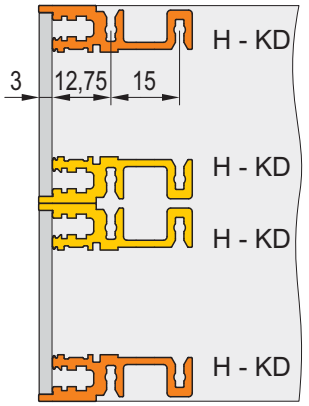

06105063

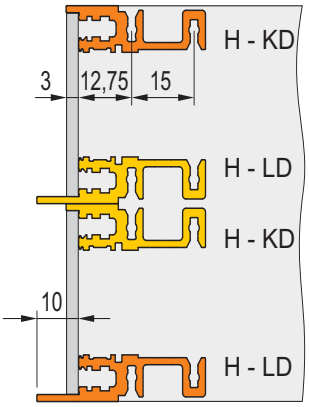

06108064

2 x 3 U, 6 U

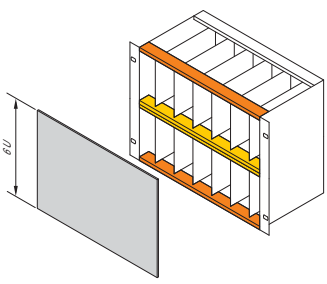

06105059

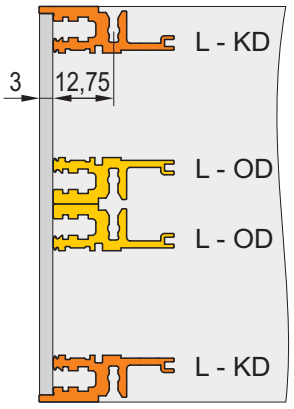

06105064

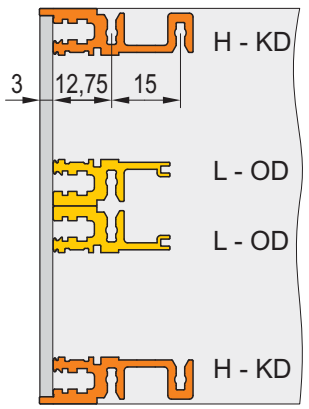

06105065

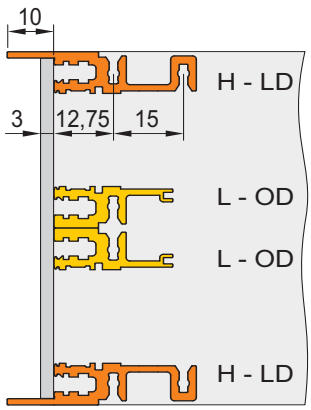

06108065

L-OD = Light - without lip, L-KD = Light - short lip, H-KD = Heavy - short lip, H-LD = Heavy - long lip

Front horizontal rails

Order Information

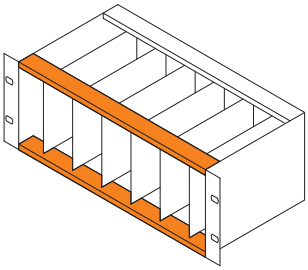 bza44980	"light" Type L-OD without lip	"light" Type L-KD short lip	"heavy" Type H-KD short lip	With long lip for insertion/ extraction of CompactPCI and VME64x boards "heavy" Type H-LD long lip
	06197006	06197007	06197008	06197009
With HP markings from 28 HP, Al extrusion, anodised finish, conductive contact surface	Al extrusion, anodised finish, conductive contact surface, with printed HP markings without lip: 2 x 3 U installation and continuous 6 U front panel	Al extrusion, anodised finish, conductive contact surface, with printed HP markings short lip: horizontal rail and front panel form a single plane	Al extrusion, anodised finish, conductive contact surface, with printed HP markings short lip: horizontal rail and front panel form a single plane	Al extrusion, anodised finish, conductive contact surface, with printed HP markings long lip: for insertion/extraction of CompactPCI or VME64x boards
Usable length HP / **Length mm**	**1 piece (SPQ 10)[1)]**	**1 piece (SPQ 10)[1)]**	**1 piece (SPQ 10)[1)]**	**1 piece (SPQ 10)[1)]**
20 / 106.68	**34560-020**	**34560-120**	**34560-220**	**34560-320**
28 / 147.32	**34560-028**	**34560-128**	**34560-228**	**34560-328**
40 / 208.28	**34560-040**	**34560-140**	**34560-240**	**34560-340**
42 / 218.44	**34560-042**	**34560-142**	**34560-242**	**34560-342**
63 / 325.12	**34560-063**	**34560-163**	**34560-263**	**34560-363**
84 / 431.80	**34560-084**	**34560-184**	**34560-284**	**34560-384**
– / 1000	**34560-001**	**34560-101**	**34560-201**	**34560-301**
Screw, M4 x 14, PU 100 pieces	**24560-130**	**24560-130**	**24560-130**	**24560-130**
Screw, M4 x 10, required if guide rails are screwed to slot 1, PU 100 pieces	–	–	**24560-155**	**24560-155**
Threaded inserts see page	6.35	6.35	6.35	6.35

1) SPQ (standard pack quantity): Part number includes 1 piece, but delivery is exclusively made in standard pack quantity (SPQ); please order at least the SPQ quantity or a multiple
"light": loading capacity up to approx. 7.5 kg; "heavy": loading capacity > 7.5 kg

Note

- 1000 mm version without M4 thread to front, without printed markings and without notch for 19"-bracket
- Rugged horizontal rails with 3 fixing holes see section "Rugged Subracks", page 6.99

Subracks – europacPROServicePLUS

Rear horizontal rails

Indirect backplane mounting (with insulation strip)

04400001

Direct backplane mounting

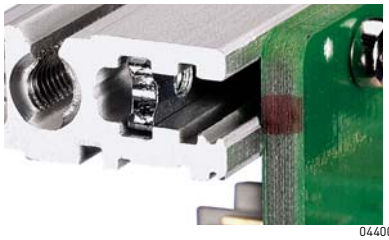

04400002

Connector fitting with Z

04400003

"light"

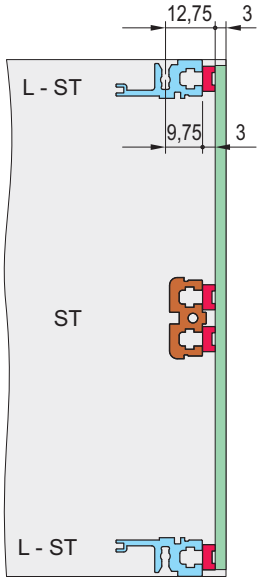

06105072

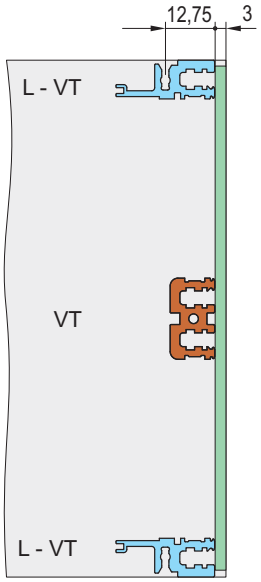

06105073

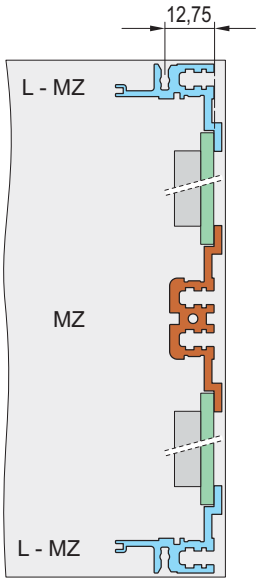

06105071

"heavy"

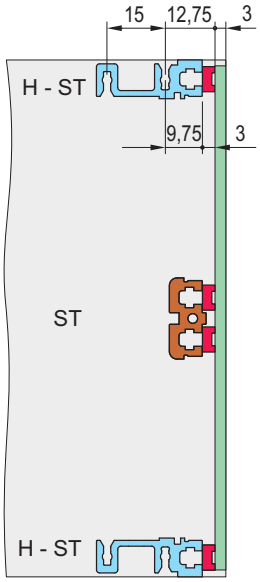

06108066

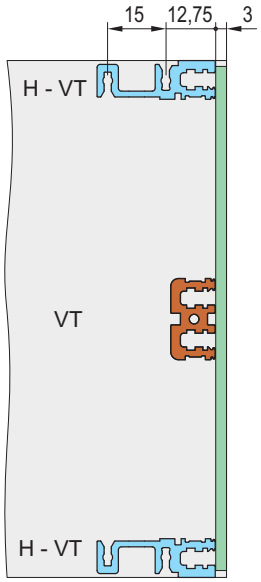

06108067

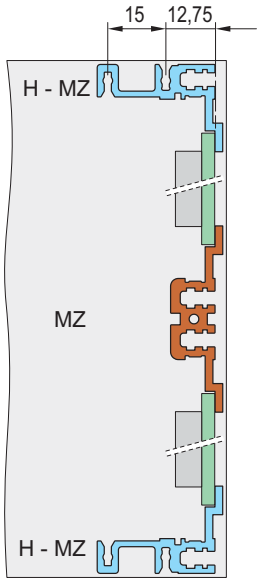

06108068

ST = standard, L = light, H = heavy

VT = depth-offset, L = light, H = heavy

MZ = with Z-rail, L = light, H = heavy

Rear horizontal rails, top and bottom

Order Information

		For indirect backplane mounting with insulation strip		For direct backplane mounting		For direct fixing of connectors in accordance with EN 60603-2 (DIN 41612)	
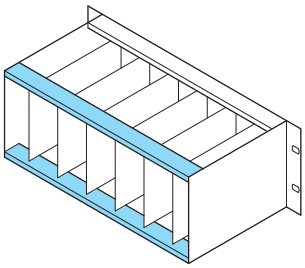 06105074		04400001		04400002		04400003	
		"light" Type L-ST standard	"heavy" Type H-ST standard	"light" Type L-VT + 3 mm	"heavy" Type H-VT + 3 mm	"light" Type L-MZ with Z-rail	"heavy" Type H-MZ with Z-rail
		06197010	06197011	06197011	06197009	06197014	06197015
With HP markings from 28 HP, Al extrusion, anodised finish, conductive surface		Al extrusion, anodised surface, conductive contact surface, with printed HP markings	Al extrusion, anodised surface, conductive contact surface, with printed HP markings	Al extrusion, anodised surface, conductive contact surface, with printed HP markings	Al extrusion, anodised surface, conductive contact surface, with printed HP markings	Al extrusion, anodised surface, conductive contact surface, with printed HP markings	Al extrusion, anodised surface, conductive contact surface, with printed HP markings
Usable length HP	**Length mm**	**1 piece (SPQ 10)[1)]**	**1 piece (SPQ 10)[1)]**	**1 piece (SPQ 10)[1)]**	**1 piece (SPQ 10)[1)]**	**1 piece (SPQ 10)[1)]**	**1 piece (SPQ 10)[1)]**
20	106.68	**34560-420**	**34560-520**	**34560-620**	**34560-720**	**34560-820**	**34560-920**
28	147.32	**34560-428**	**34560-528**	**34560-628**	**34560-728**	**34560-828**	**34560-928**
40	208.28	**34560-440**	**34560-540**	**34560-640**	**34560-740**	**34560-840**	**34560-940**
42	218.44	**34560-442**	**34560-542**	**34560-642**	**34560-742**	**34560-842**	**34560-942**
63	325.12	**34560-463**	**34560-563**	**34560-663**	**34560-763**	**34560-863**	**34560-963**
84	431.80	**34560-484**	**34560-584**	**34560-684**	**34560-784**	**34560-884**	**34560-984**
–	1000	**34560-401**	**34560-501**	**34560-601**	**34560-701**	**34560-801**	–
Screw, M4 x 14, PU 100 pieces, for fastening horizontal rail to side panel		**24560-130**	**24560-130**	**24560-130**	**24560-130**	**24560-130**	**24560-130**
Screw, M4 x 10, required if guide rails are screwed to slot 1, PU 100 pieces		–	**24560-155**	–	**24560-155**	–	**24560-155**
Perforated rail for connector mounting with insulation strip see page		6.36	6.36	–	–	–	–
Z-rail for connector mounting without insulation strip see page		6.36	6.36	–	–	–	–
Insulation strips see page		6.35	6.35	–	–	–	–
Threaded inserts see page		6.35	6.35	6.35	6.35	6.35	6.35

1) SPQ (standard pack quantity): Part number includes 1 piece, but delivery is exclusively made in standard pack quantity (SPQ); please order at least the SPQ quantity or a multiple
"light": loading capacity up to approx. 7.5 kg; "heavy": loading capacity > 7.5 kg

Note

- 1000 mm version without M4 thread to front, without printed markings and without notch for 19"-bracket
- Rugged horizontal rails with 3 fixing holes see section "Rugged Subracks", page 6.99

Subracks – europac PRO ServicePLUS

Rear horizontal rails, centre, for 6 U

Order Information

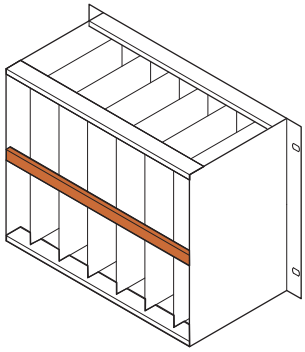
06108090

	For indirect backplane mounting with insulation strip	For direct backplane mounting	For direct fixing of connectors in accordance with EN 60603-2 (DIN 41612)
	04400001	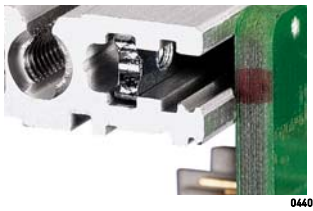 04400002	04400003
	Typ ST	Typ VT	Typ MZ
	06197016	06197017	06197018
	Al extrusion, anodised surface, conductive contact surface, without printed markings	Al extrusion, anodised surface, conductive contact surface, without printed markings	Al extrusion, anodised surface, conductive contact surface, without printed markings
Usable length HP / Length mm	1 piece (SPQ 10)[1]	1 piece (SPQ 10)[1]	1 piece (SPQ 10)[1]
20 / 106.68	**34561-020**	**34561-120**	**34561-220**
28 / 147.32	**34561-028**	**34561-128**	**34561-228**
40 / 208.28	**34561-040**	**34561-140**	**34561-240**
42 / 218.44	**34561-042**	**34561-142**	**34561-242**
63 / 325.12	**34561-063**	**34561-163**	**34561-263**
84 / 431.80	**34561-084**	**34561-184**	**34561-284**
– / 1000	**34561-001**	**34561-101**	**34561-201**
Screw, M4 x 14, PU 100 pieces, for fastening horizontal rail to side panel	**24560-130**	**24560-130**	**24560-130**
Insulation strips see page	6.35	–	–
Threaded inserts see page	6.35	6.35	6.35

1) SPQ (standard pack quantity): Part number includes 1 piece, but delivery is exclusively made in standard pack quantity (SPQ); please order at least the SPQ quantity or a multiple
"light": loading capacity up to approx. 7.5 kg; "heavy": loading capacity > 7.5 kg

Note

- All horizontal rails without printed markings
- 1000 mm version without M4 thread to front

Horizontal rails (type AB) for rear I/O applications

Order Information

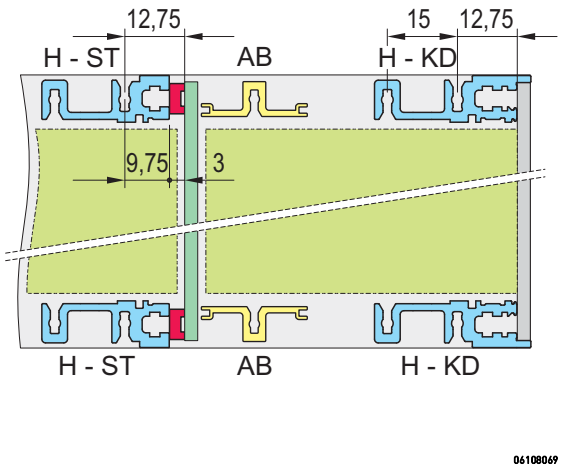

06108069

For CompactPCI in rear I/O area

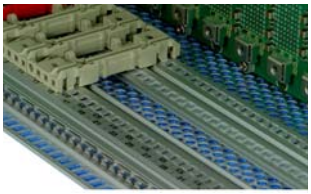

06108009

Typ AB

06197019

Al extrusion, anodised surface,
conductive contact surface;
horizontal rail type AB (AB = support)
is required to fix the 80 mm rear I/O boards;
without printed markings

Usable length HP	Length mm	1 piece (SPQ 10)[1]
20	106.68	**34561-520**
28	147.32	**34561-528**
40	208.28	**34561-540**
42	218.44	**34561-542**
63	325.12	**34561-563**
84	431.80	**34561-584**
–	1000	**34561-501**
Screw, M4 x 14, PU 100 pieces, for fastening horizontal rail to side panel		**24560-130**

1) SPQ (standard pack quantity): Part number includes 1 piece, but delivery is exclusively made in standard pack quantity (SPQ);
please order at least the SPQ quantity or a multiple
"light": loading capacity up to approx. 7.5 kg; "heavy": loading capacity > 7.5 kg

Note

- All horizontal rails without printed markings
- 1000 mm version without M4 thread to front

Subracks – europac PRO ServicePLUS

Threaded inserts, perforated strips, insulation strips

Order Information

Threaded insert

M2.5 | M3

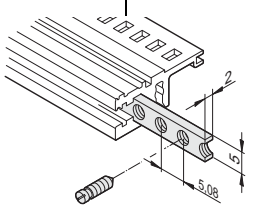

required for fixing the front panel to the horizontal rail; St, zinc-plated; use collar screw 12.3 mm, see page 6.66

Perforated strip (item 1)

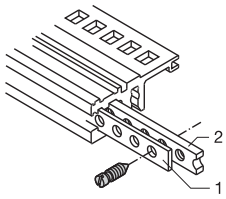

for centring shielded plug-in units, Al, 1 mm, please order grub screw separately

Insulation strip

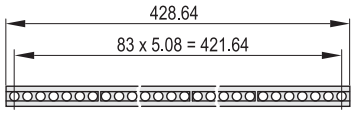

for insulated backplane mounting; PBT UL 94 V-0, grey

Usable length HP	Threaded insert Length mm	1 piece (SPQ 10)[1]	1 piece (SPQ 10)[1]	Perforated strip Length mm	1 piece (SPQ 10)[1]	Insulation strip Length mm	PU 10 pieces
20	106.18	**34561-320**	–	106.48	**30845-189**	101.50	**24560-820**
28	146.82	**34561-328**	–	147.12	**30845-197**	144.20	**24560-828**
40	207.78	**34561-340**	–	208.08	**30845-209**	205.12	**24560-840**
42	217.94	**34561-342**	–	218.24	**30845-211**	210.40	**24560-842**
63	324.62	**34561-363**	–	324.92	**30845-232**	316.88	**24560-863**
84	431.30	**34561-384**	**34561-484**	431.60	**30845-253**	428.64	**24560-884**
196	1000.26	**34565-196**	–	1000.56	**34565-396**		–
Accessories							
Grub screw M2.5 x 8, PU 100 pieces		**21100-276**	–		–		–
Grub screw M2.5 x 9, PU 100 pieces		–	–		**21101-359**		–
Grub screw M3 x 8, PU 100 pieces		–	**21100-646**		–		–

1) SPQ (standard pack quantity): Part number includes 1 piece, but delivery is exclusively made in standard pack quantity (SPQ); please order at least the SPQ quantity or a multiple

2) Part no. includes one packing unit (PU); delivery is exclusively made in PU

Z-rails, perforated rails

Order Information

		Z-rail for connectors		Perforated rail
		DIN EN 60603-2, DIN 41612 item 1	31-pin, DIN 41617	EN 606032, DIN 41612 item 1
		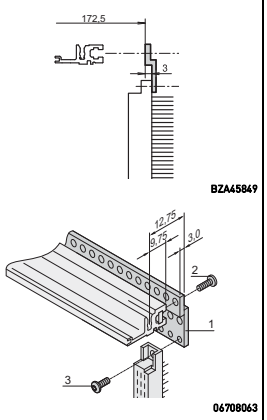	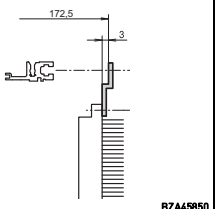	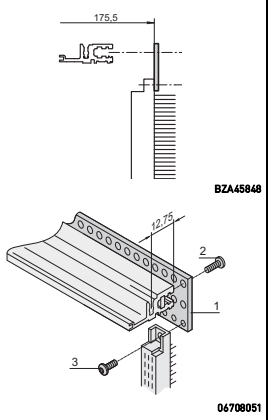
		for connector mounting on ST horizontal rails, please order threaded inserts and screw separately	for connector mounting on ST horizontal rails, please order threaded inserts and screw separately	for connector mounting on VT horizontal rails, please order threaded inserts and screw separately
Usable length HP	**Length mm**	**1 piece**	**1 piece**	**PU 4 pieces**
20	101.60	**30822-025**	–	**20822-051**
28	142.24	**30822-033**	–	**20822-049**
40	203.20	**30822-045**	**30819-763**	**20822-046**
42	213.36	**30822-047**	–	**20822-050**
60	304.80	**30822-065**	**30819-783**	**20822-047**
84	426.72	**30822-089**	**30819-808**	**20822-048**
Item 3, torx panhead screw to fix connector to perforated rail,, M2.5 × 7, PU 100 pieces		**24560-147**	**24560-147**	**24560-147**
Item 2, torx panhead screw, to fix perforated rails to horizontal rail, M2.5 × 10, PU 100 pieces		**24560-148**	**24560-148**	**24560-148**

Subracks – europac PRO ServicePLUS

Guide rails

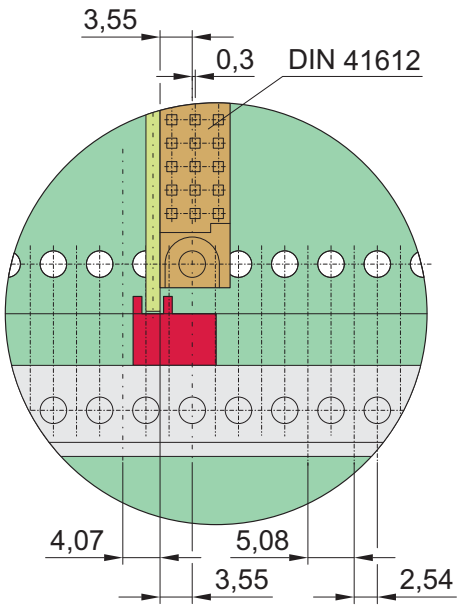

Front view: position of guide rails to connector (EN 60603-2/ DIN 41612)

Guide rails form the interface between the subrack mechanics and the sub-assemblies (PCBs, plug-in units, frame-type plug-in units, ...).

Guide rails for standard applications are 2 HP wide. Guide rails with coding (e.g. for CompactPCI or VME64bus applications) are 4 HP wide.

There are groove widths of 2 mm and 2.5 mm.

The guide rails are clipped into the rectangular cut-outs of the horizontal rails. They can additionally be bolted to the horizontal rail (type H only) for higher shock and vibration requirements.

The printed HP markings on the horizontal rail (28 HP and above) allow the rails to be fitted in the correct position easily (position of sub-assembly = "number in viewing window" or in front of the arrow
marking on the guide rails).

Applications for guide rails

06102001

For plug-in units and frame-type plug-in units (with front panels) (standard type)

06102002

06102005

For plug-in units and frame type plug-in units or for PCBs without their own front panel (accessory type or robust version)

06106001

For CompactPCI or VME64x plug-in units (type IEEE with coding; frame-type plug-in units cannot be fitted)

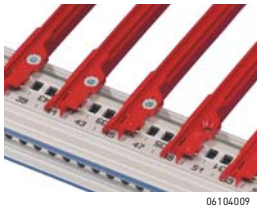
06104009

For plug-in drive unit modules or PCBs in 4.4" (111.7 mm) height (type 4.4")

06112022

Rugged guide rails to accommodate conduction cooled assembly (CCA) adaptor

Accessories:
- ESD clip
- Keying/coding pegs
- Board locking

Guide rails for plug-in units and modules, one-piece, groove width 2 mm and 2.5 mm

Order Information

Assembly
- can be clipped into Al extruded horizontal rails
- can be clipped into 1.5 mm thick plates

Storage temperature
from -40 °C ... 130 °C

Board length	Groove width	Colour	For plug-in units and frame type plug-in units standard type		standard type, with DIN connector fixing
			06102001		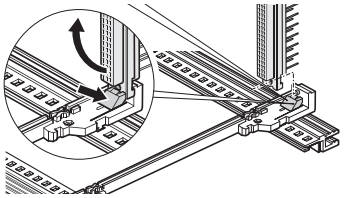 06101501
			up to 220 mm length, PBT, UL 94 V-0; from 280 mm length, multi-piece, end piece PBT, UL 94 V-0, central section Al extrusion	PBT, UL 94 V-0	PBT, UL 94 V-0, red, connector is clipped directly onto the guide rails; for euroboards only, 100 x 160 mm or 100 x 220 mm
mm	mm	mm	PU 10 pieces[2]	1 piece (SPQ 50)[1]	1 pair (SPQ 10)[1]
70	2	red	–	**34579-230**	–
70	2	grey	–	**34579-231**	–
160	2	red	**24560-351**	**64560-001**	**64560-074**
220	2	red	**24560-353**	**64560-002**	**64560-075**
280	2	red	**24560-379**	–	–
340	2	red	**24560-380**	–	–
160	2.5	red	–	**64560-096**	–
220	2.5	red	–	**64560-098**	–

Accessories

Retention screw, PU 100 pieces; Torque max. 0.2 Nm 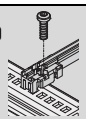	**24560-141**	–	**24560-141**
ESD clip, PU 50 pieces	**24560-255**		**24560-255**

1) SPQ (standard pack quantity): Part number includes 1 piece, but delivery is exclusively made in standard pack quantity (SPQ); please order at least the SPQ quantity or a multiple

2) Part no. includes one packing unit (PU); delivery is exclusively made in PU

Description of accessories see from page 6.43

Subracks – europac PRO ServicePLUS

Guide rails type "accessory", one-piece, groove width 2 mm and 2.5 mm

Order Information

Assembly
- can be clipped into Al extruded horizontal rails
- can be clipped into 1.5 mm thick plates

Storage temperature
from -40 °C ... +130 °C

Board length mm	Groove width mm	Colour	Guide rails accessory type PU 10 pieces[2]	Guide rails accessory type 1 piece (SPQ 50)	"Accessories" with DIN connector mounting PU 10 pairs[2]	accessory type, strengthened 1 piece (SPQ 50)	for heavy modules, Al extrusion, silver, robust version 1 piece (SPQ 10)[1]
			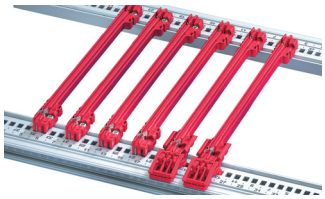 06102002		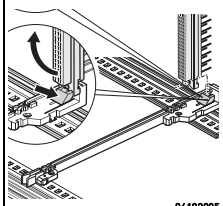 06102005	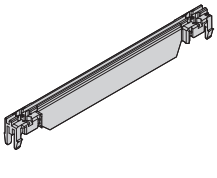 06102005	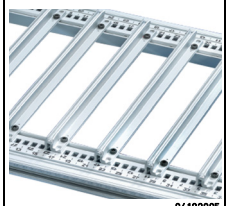 06102005
			up to 280 mm length, PBT, UL 94 V-0; > 280 mm length, multi-piece, end piece PBT, UL 94 V-0, middle section Al extrusion		PBT, UL 94 V-0, connector is bolted directly onto the guide rails, only suitable for euroboards 100 x 160 mm or 100 x 220 mm	PBT UL 94 V-0, red; support beam of guide rails adds to strengthening	Al extrusion; is screwed to horizontal rail "heavy" with retention screws
100	2	red	–	**64560-082**	–	–	–
160	2	red	**24560-373**	**64560-005**	24560-274	**64560-076**	–
160	2	grey/silver	–	**64560-055**	24560-276	–	**34562-881**
220	2	red	**24560-374**	**64560-006**	24560-275	**64560-078**	–
220	2	grey/silver	–	**64560-166**	24560-277	–	**34562-882**
280	2	red/silver	**24560-375**	–	–	**64560-080**	**34562-883**
340	2	red/silver	**24560-376**	–	–	–	**34562-884**
400	2	red/silver	–	–	–	–	**34562-885**
160	2.5	silver	–	–	–	–	**34564-881**
220	2.5	silver	–	–	–	–	**34564-882**
280	2.5	silver	–	–	–	–	**34564-883**
340	2.5	silver	–	–	–	–	**34564-884**
400	2.5	silver	–	–	–	–	**34564-885**

Accessories

Retention screw, PU 100 pieces; torque max. 0.2 Nm 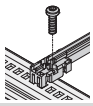	**24560-141**	**24560-141**	**24560-141**	**24560-141**	**24560-157**
ESD clip, PU 50 pieces	**24560-255**	**24560-255**	**24560-255**	**24560-255**	–
Board locking C, red, PU 10 pieces	**24560-377**	**24560-377**	**24560-377**	**24560-377**	–
Board handle C, red, PU 10 pieces	**24560-378**	**24560-378**	**24560-378**	**24560-378**	–
Identification strips for board handle, red, PU 1 sheet = 438 pieces	**60817-228**	**60817-228**	**60817-228**	**60817-228**	–
Coding see page	6.43				–

1) SPQ (standard pack quantity): Part number includes 1 piece, but delivery is exclusively made in standard pack quantity (SPQ); please order at least the SPQ quantity or a multiple

2) Part no. includes one packing unit (PU); delivery is exclusively made in PU

Description of accessories see from page 6.43

Subracks – europac PRO ServicePLUS

Guide rails for CompactPCI, VME64x with coding, 4.4" PCBs, groove width 2 mm and 2.5 mm

Order Information

Assembly
- can be clipped into Al extruded horizontal rails
- can be clipped into1.5 mm thick plates

Storage temperature
from -40 °C ... 130 °C

			For CompactPCI, VME64x with coding				For 4.4" PCBs	
			In accordance with IEEE 1101.10 and IEC 60297-3-103		Offset 0.1" for power supply units in accordance with IEEE 1101.10 and IEC 60297-3-103			
			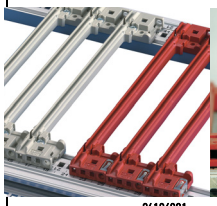 06106001	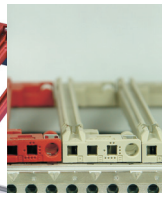 04611009	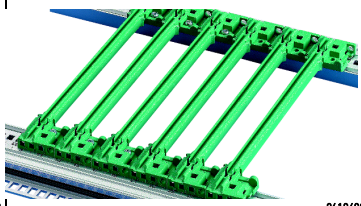 06106002		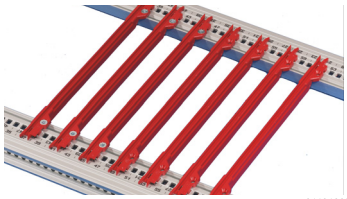 06104009	
			One-piece for groove width 2 mm, PBT, UL 94 V-0; multi-piece at groove width 2,5 mm, end-piece PBT, UL 94 V-0, center piece Al	PBT, UL 94 V-0	PBT, UL 94 V-0, for installation of power supplies in CompactPCI systems or plug-in units with SMD placement		One-piece, PBT, UL 94 V-0; for 4.4" PCBs or drive unit modules	
Board length mm	**Groove width** mm	**Colour** mm	**PU 10 pieces**	**1 piece (SPQ 50)[1)]**	**PU 10 pieces**	**1 piece (SPQ 50)[1)]**	**PU 10 pieces**	**1 piece (SPQ 50)[1)]**
70	2	red	24560-355	64560-085	–	–	–	–
70	2	grey	24560-360	64560-086	–	–	–	–
160	2	red	24560-356	64560-089	–	–	24560-361	64560-143
160	2	grey	24560-358	64560-090	–	–	–	–
160	2	green	–	–	24560-359	64560-071	–	–
220	2	red	–	64560-091	–	–	24560-362	64560-144
220	2	grey	–	64560-092	–	–	–	–
220	2	green	–	–	–	64560-072	–	–
160	2.5	red	–	–	–	–	–	64560-145
220	2.5	red	24561-330	–	–	–	–	64560-146
220	2.5	grey	24561-340	–	–	–	–	–
280	2.5	red	24561-331	–	–	–	–	–
280	2.5	grey	24561-341	–	–	–	–	–
340	2.5	red	24561-332	–	–	–	–	–
340	2.5	grey	24561-342	–	–	–	–	–

Accessories

ESD clip, PU 50 pieces	24560-255	24560-255	–	–	–	–
ESD clips, for alignment pin, PU 50 pieces	24560-256	24560-256	24560-256	24560-256	–	–
Retention screw, PU 100 pieces; torque max. 0.2 Nm	24560-141	24560-141	24560-141	24560-141	24560-158	24560-158
Coding peg, PU 100 pieces	20817-501	20817-501	20817-501	20817-501	–	–

1) SPQ (standard pack quantity): Part number includes 1 piece, but delivery is exclusively made in standard pack quantity (SPQ); please order at least the SPQ quantity or a multiple

2) Part no. includes one packing unit (PU); delivery is exclusively made in PU

Description of accessories see from page 6.43

Subracks – europac PRO ServicePLUS

Guide rails, multi-piece, groove width 2 mm

Order Information

PCBs:
Fixed lengths for 160, 220, 280, 340 mm; length 1000 mm for special dimensions

Mounting: pluggable into horizontal rails

Storage temperature :
End piece -40°C ... +130°C
PVC profile 0°C ... +60°C

Description	Length mm	Groove width mm	For plug-in units and modules standard type		Accessories type		For 4.4" PCBs	
			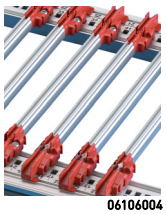 06106004		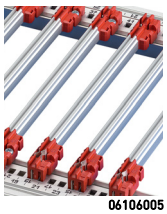 06106005		06106006	
			end piece, PBT, UL 94 V-0, middle section Al extrusion	end piece, PBT, UL 94 V-0, middle section plastic extrusion (PVC, RAL 7035)	end piece, PBT, UL 94 V-0, middle section Al extrusion	end piece, PBT, UL 94 V-0, middle section plastic extrusion (PVC, RAL 7035)	end piece, PBT, UL 94 V-0, middle section Al extrusion	end piece, PBT, UL 94 V-0, middle section plastic extrusion (PVC, RAL 7035)
			1 piece (SPQ 10)[1]	1 piece (SPQ 10)[1]	1 piece (SPQ 10)[1]	1 piece (SPQ 10)[1]	1 piece (SPQ 10)[1]	1 piece (SPQ 10)[1]
End piece, red, 1 pair		2	**64560-004**	**64560-004**	**64560-008**	**64560-008**	**64560-057**	**64560-057**
Al extrusion, for 160 mm board length	95	2	**34560-891**	**34564-891**	**34560-891**	**34564-891**	**34560-891**	**34564-891**
Al extrusion, for 220 mm board length	155	2	**34560-892**	**34564-892**	**34560-892**	**34564-892**	**34560-892**	**34564-892**
Al extrusion, for 280 mm board length	215	2	**34560-893**	**34564-893**	**34560-893**	**34564-893**	**34560-893**	**34564-893**
Al extrusion, for 340 mm board length	275	2	**34560-894**	–	**34560-894**	–	**34560-894**	–
Al extrusion, for any board length	1000	2	**34560-900**	–	**34560-900**	–	**34560-900**	–
Plastic extrusion, for any board length	1000	2	–	**34564-900**	–	**34564-900**	–	**34564-900**

Accessories

ESD clip, PU 50 pieces			**24560-255**	**24560-255**	**24560-255**	**24560-255**	–	–
Retention screw, PU 100 pieces; torque max. 0.2 Nm			**24560-141**	**24560-141**	**24560-141**	**24560-141**	**24560-158**	**24560-158**
Board locking C, red, PU 10 pieces			–	–	**24560-377**	**24560-377**	–	–
Board handle C, red, PU 10 pieces			–	–	**24560-378**	**24560-378**	–	–
Identification strips for board handle, red, PU 1 sheet = 438 pieces			–	–	**60817-228**	**60817-228**	–	–
Coding see page			–	–	see page 6.43		–	–

1) SPQ (standard pack quantity): Part number includes 1 piece, but delivery is exclusively made in standard pack quantity (SPQ); please order at least the SPQ quantity or a multiple

2) Part no. includes one packing unit (PU); delivery is exclusively made in PU

Description of accessories see from page 6.43

Note

- Strengthening for middle section (plastic extrusion) available on request

Dimension drawings of guide rails

Standard

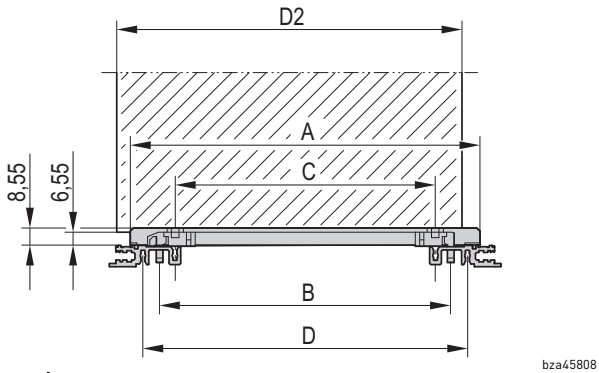

Robust version

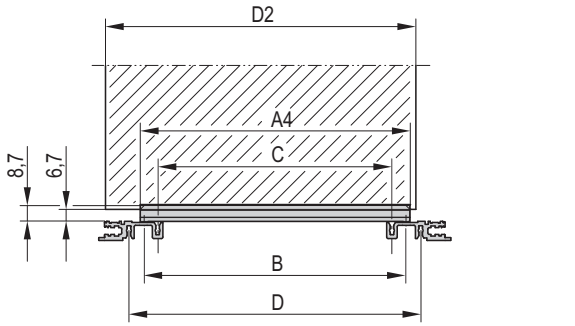

For accessories

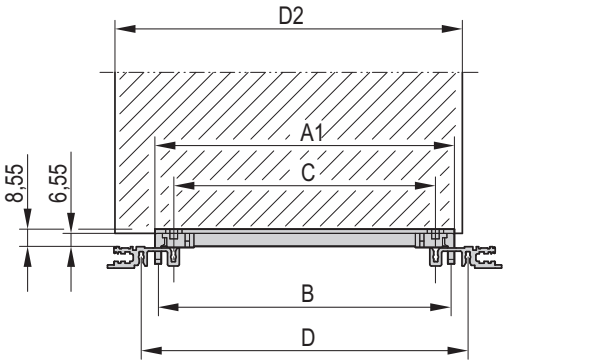

For accessories, strengthened

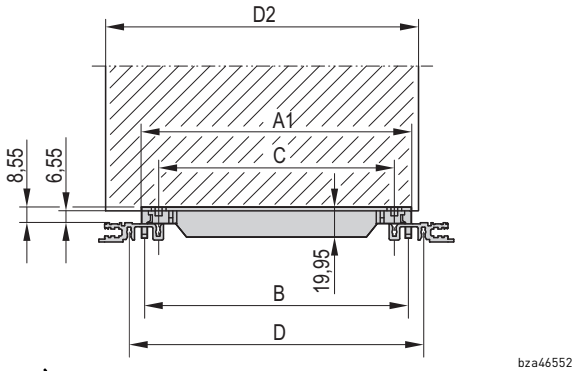

CompactPCI, VME64x

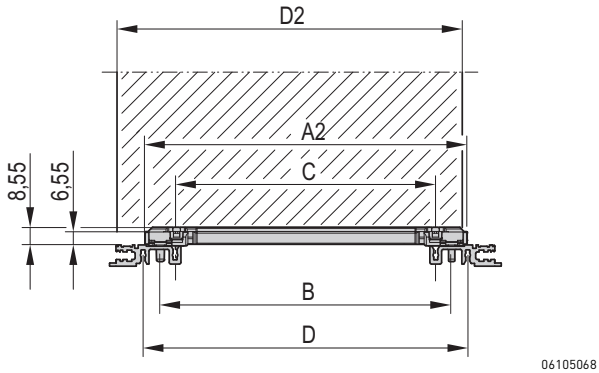

4.4" (111.7 mm)

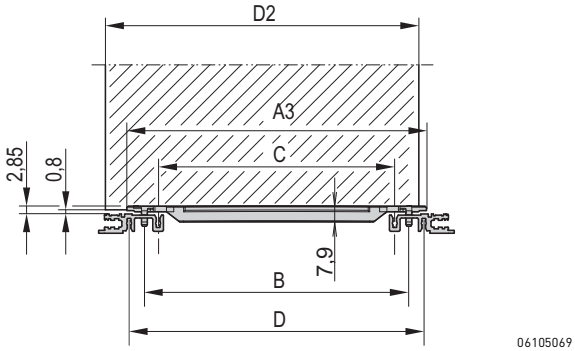

Dimensions table

Board length	Dimensions							
L	A	A1	A2	A3	A4	B	C	D
mm	mm	mm	mm	mm	mm	mm	mm	mm
70	71.5	47.9	59.39	63	49	45	30	60
100	101.5	77.9	89.39	93	79	75	60	90
160	161.5	137.9	149.39	153	139	135	120	150
220	221.5	197.9	209.39	213	199	195	180	210
280	281.5	257.9	269.39	273	259	255	240	270
340	341.5	317.9	322.39	333	319	315	300	330
400	401.5	377.9	389.39	393	379	375	360	390

A, A1, A2, A3, A4: Length of rail
B: Pitch of snap-in fixing
C: Pitch of guide rail retention screws
D: Pitch of horizontal rail retention screws

Subracks – europac PRO ServicePLUS

Guide rail accessories

Order Information

Assembly	Colour	ESD clips, CompactPCI/VME 64 alignment pin for guide rails	Coding for subracks: Keying/coding block for guide rails accessory type	Coding for subracks: Keying/coding for CompactPCI, VME64x handles to IEEE 1011.10 and IEC 60297-3-103
		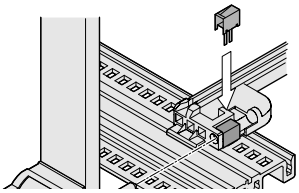 06103052	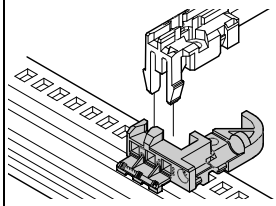 06103051	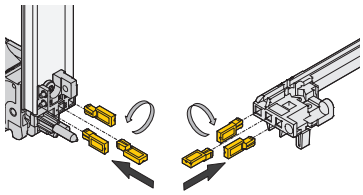 04612052
		Spring steel, tin-plated, ESD clip, for alignment pin in accordance with IEEE; can be plugged into the guide rails with coding and into the keying/coding block; provides conductive contact between the alignment pin of the insertion/extractor handle (IEL or IET handle) and the horizontal rail	PBT, UL 94 V-0, keying/coding block is clipped into the horizontal rail next to the guide rail; please order keying/coding pegs separately	Keying/coding peg, PBTP, UL 94 V-0, RAL 7035 The keying/coding pegs prevent plug-in units to be mounted in wrong slots. They are inserted in the chambers of the codable card guides as well as in the insertion/extractor handles IEL or IET (4 possible positions), resulting in 64 codings per card guide; when coding the upper and lower card guide, 4096 codings will result;
		PU 50 pieces	1 piece (SPQ 50)	PU 100 pieces
above	red	–	**34579-232**	–
	grey	–	**34579-233**	**20817-501**
	silver	**24560-256**	–	–
below	red	–	**34579-234**	–
	grey	–	**34579-235**	**20817-501**
	silver	**24560-256**	–	–

1) SPQ (standard pack quantity): Part number includes 1 piece, but delivery is exclusively made in standard pack quantity (SPQ); please order at least the SPQ quantity or a multiple

2) Part no. includes one packing unit (PU); delivery is exclusively made in PU

Guide rail accessories

Order Information

Assembly / Colour / mm	ESD clips for guide rails	Board locking C for PCBs without front panel; for accessory type guide rails	PCB handle C for board locking; for accessory type guide rails	Identification strips
	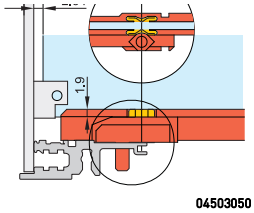 04503050	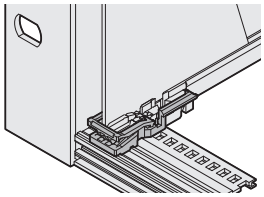 04805050	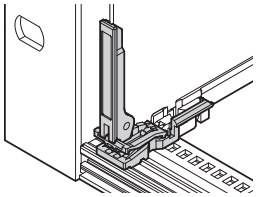 04805051	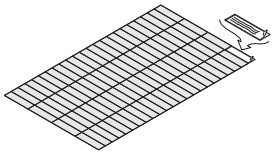 06108076
	Spring steel, tin-plated, provides conductive contact between board and horizontal rail, on both the solder side and the component side	PBT, UL 94 V-0, red, to fix the PCB in the subrack (also slot 1), can also be used without board handle, minimum distance 3 HP	PBT, UL 94 V-0, red, insertion/extraction function with connection to board locking (also slot 1), mounting directly behind front panel (above and below), minimum distance 3 HP	Polyester film, 31 x 4 mm, self-adhesive, white/matt (1 A4 sheet contains 438 pieces)
	silver	**red**	**red**	**white/matt**
	PU 50 pieces	PU 10 pieces	PU 10 pieces	1 piece
above/below	**24560-255**	**24560-377**	**24560-378**	**60817-228**

Shielding for top and bottom

Cover plates can be used for electromagnetic shielding (with EMC contact springs) or as mechanical protection (without EMC springs)

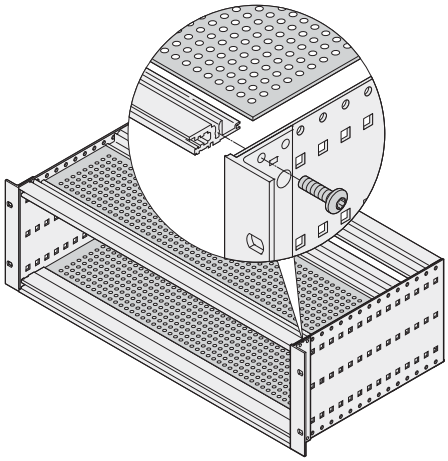

06108077

Cover plates for mechanical protection

- Cover plates are inserted into the grooves of the front and rear horizontal rails, type L "light"

see page 6.45

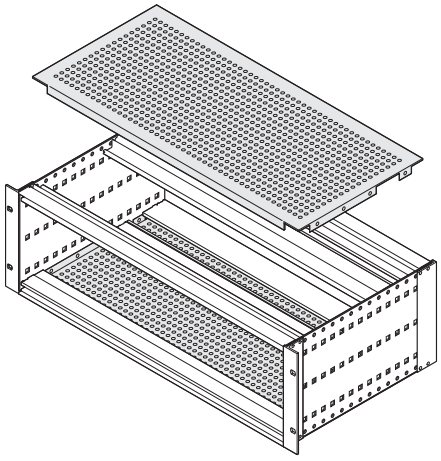

06102084

Cover plates with EMC shielding and mechanical protection

EMC cover plates for top and bottom

- Inserted in the groove of the front and rear horizontal rails; shielding with contact springs, lateral contact by bolting the bracket to the side panel
- Used when standard-depth PCBs (160, 220, 280, ...) are fitted

see page 6.46

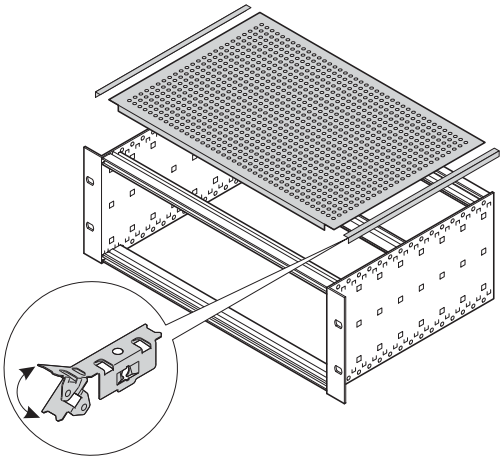

06105082

Universal EMC cover plates for top and bottom

- Inserted in the groove of the front and rear horizontal rails; shielding with contact springs, lateral contact by bolting to the side panel with special contact springs
- Used when PCBs with special dimensions are fitted

see page 6.47

Subracks – europac PRO ServicePLUS

Cover plates for mechanical protection (insertion into horizontal rail type L

Order Information

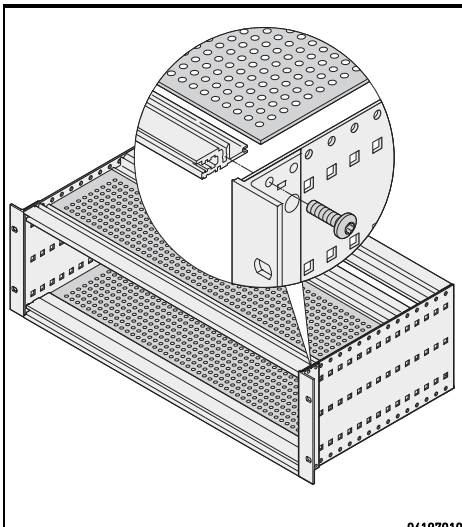

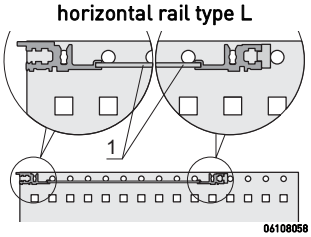

Cover plates for insertion into horizontal rail type L

Perforated Al plate, 1.2 mm, hole diameter 3.8 mm, Al, untreated, perforation degree 60 %; for insertion into the groove of the light horizontal rails (type L)

Width HP	Depth mm	Application	PU 1 pair
42	175	160 mm board depth	**24561-031**
63	175	160 mm board depth	**24561-041**
84	175	160 mm board depth	**24561-051**
84	235	220 mm board depth	**24561-052**

Note

- Other dimensions on request

EMC cover plates and mechanical protection

- Cover plate for bolting to side panel
- Used when standard-depth PCBs (160, 220, 280, ...) are fitted

Order Information

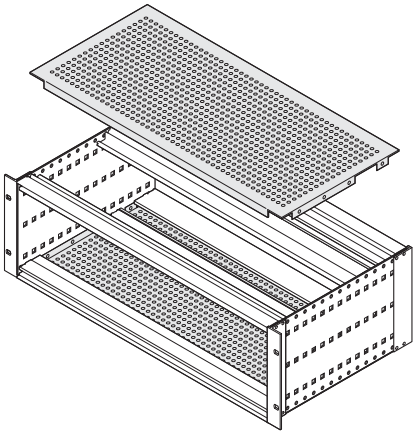

06197010

Cover plate for bolting to side panel

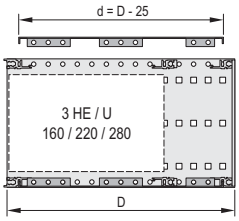

06102082

Al, 1.0 mm, hole diameter 4.0 mm, passivated, perforation degree 58 %, incl. fixing screws; for shielding 4 stainless steel EMC gaskets are required per subrack

Stainless steel EMC gasket, between cover plate and horizontal rail

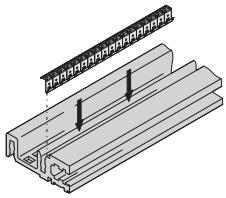

06106052

stainless steel EMC gasket, clips into the horizontal rail and forms the contact with the cover plate; suitable for all horizontal rails

Width HP	Depth mm	Application	PU 1 pair	PU 10 pieces	PU 100 pieces
42	175	160 mm board depth	24560-064	24560-241	–
42	235	160, 220 mm board depth	24560-065		
42	275	160, 220 mm board depth CompactPCI (275 mm)	24560-061		
42	277.75	160, 220 mm board depth VME64x (277.75 mm)	24579-090		
42	295	160, 220, 280 mm board depth	24560-066		
63	175	160 mm board depth	24560-071	24560-243	–
63	235	160, 220 mm board depth	24560-072		
63	275	160, 220 mm board depth CompactPCI (275 mm)	24560-062		
63	295	160, 220, 280 mm board depth	24560-073		
84	175	160 mm board depth	24560-078	24560-245	24560-246
84	235	160, 220 mm board depth	24560-079		
84	275	160, 220 mm board depth CompactPCI (275 mm)	24560-063		
84	277.75	160, 220 mm board depth VME64x (277.75 mm)	24579-092		
84	295	160, 220, 280 mm board depth	24560-080		
84	355	160, 220, 280 mm board depth	24560-081		
84	415	160, 220, 280 mm board depth	24560-082		
84	475	160, 220, 280 mm board depth	24560-083		
Assembly tool, for EMC gasket, stainless steel (horizontal rails), 1 piece 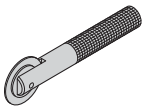			–	24560-271	

Note

- Cover plates without perforation available on request

Subracks – europacPROServicePLUS

Universal EMC cover plates and mechanical protection

■ Used when PCBs with special dimensions are fitted

Order Information

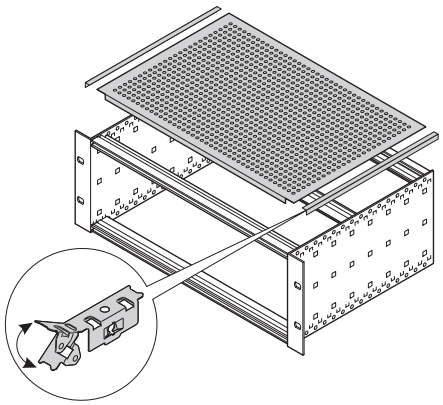

06105082

Universal cover plate

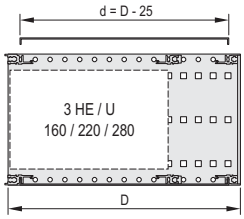

06108079

Al, 1.0 mm, hole diameter 4.0 mm, passivated, perforation degree 58 %, incl. lateral EMC sealing, incl. fixing screws

Stainless steel EMC gasket, between cover plate and horizontal rail

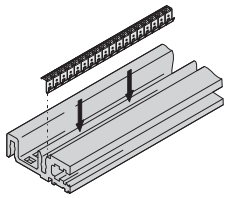

06106052

stainless steel EMC gasket, clips into the horizontal rail and forms the contact with the cover plate; suitable for all horizontal rails

Width HP	Depth mm	Application	PU 1 pair	PU 10 pieces	PU 100 pieces
42	175	160 mm board depth	**24560-031**	**24560-241**	–
42	235	160, 220 mm board depth	**24560-032**		
42	295	160, 220, 280 mm board depth	**24560-033**		
63	175	160 mm board depth	**24560-041**	**24560-243**	–
63	235	160, 220 mm board depth	**24560-042**		
63	295	160, 220, 280 mm board depth	**24560-043**		
84	175	160 mm board depth	**24560-051**	**24560-245**	**24560-246**
84	235	160, 220 mm board depth	**24560-052**		
84	295	160, 220, 280 mm board depth	**24560-053**		
84	355	160, 220, 280 mm board depth	**24560-054**		
84	415	160, 220, 280 mm board depth	**24560-055**		
84	475	160, 220, 280 mm board depth	**24560-056**		
Assembly tool, for EMC gasket, stainless steel (horizontal rails), 1 piece 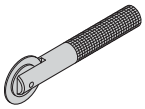			–	**24560-271**	

Cover/shielding to front and rear

- The front and rear sides of the subrack can be shielded by a hinged front panel or by a fixed front panel and 19" brackets
- The rear can be shielded with a front panel and a corner profile

Rear hood

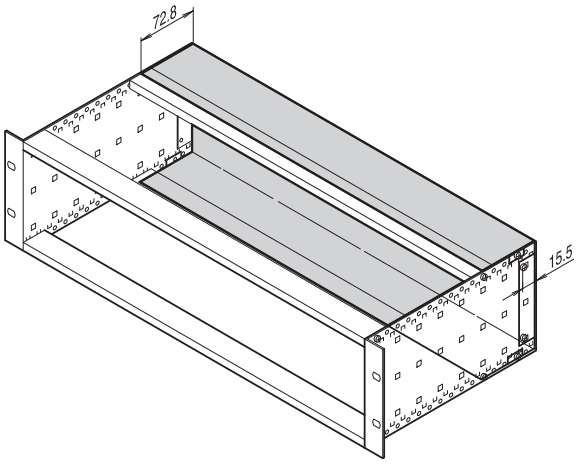

BZA45814

Front panel for front and rear

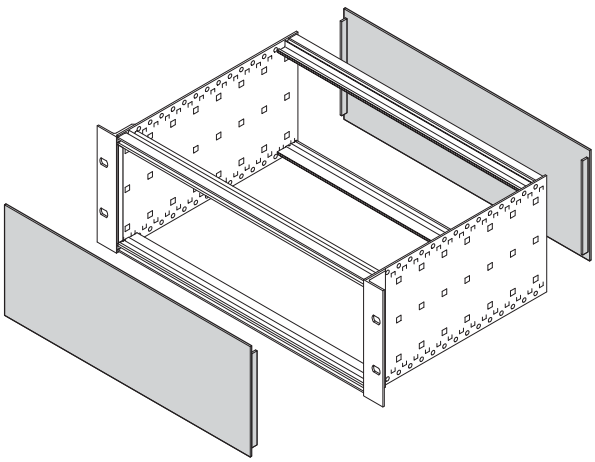

06112089

Front panel, hinged/pivoted

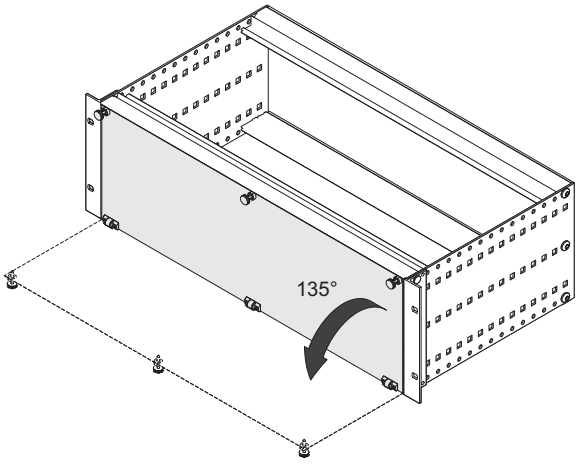

06112090

Subracks – europac PRO ServicePLUS

Rear hood for 3 U and 6 U subracks (for stainless steel EMC gasket)

Order Information

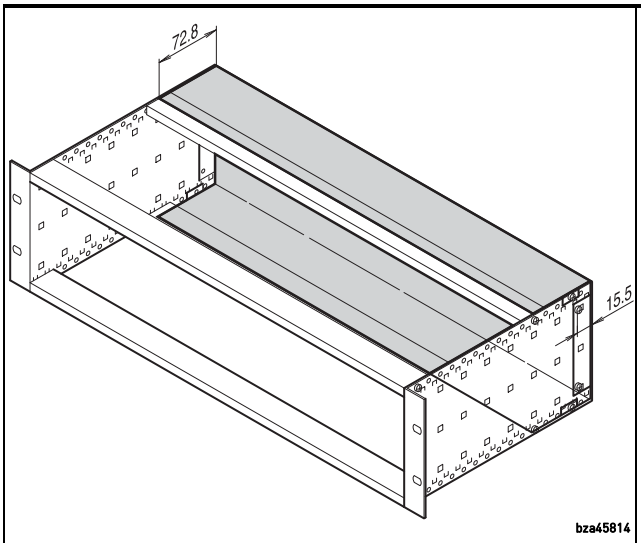

Rear hood

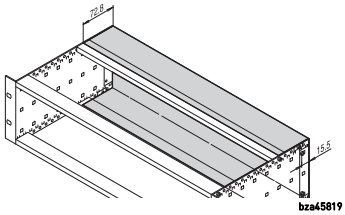

Al, 1 mm, clear passivated;
60 mm additional side panel depth required (board depth + 60 mm);
for shielding please order EMC gasket for horizontal rail separately;
cannot be used simultaneously with rear corner profile

Stainless steel EMC gasket, between cover plate and horizontal rail

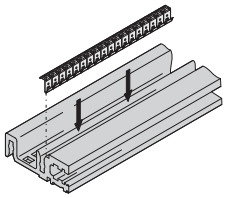

stainless steel EMC gasket,
clips into the horizontal rail and forms the contact with the cover plate;
suitable for all horizontal rails

Height U	Width HP	1 piece	PU 10 pieces	PU 100 pieces
3	42	**34561-750**	**24560-241**	–
3	84	**34561-752**	**24560-245**	**24560-246**
6	63	**34561-763**	**24560-243**	–
6	84	**34561-764**	**24560-245**	**24560-246**
Torx panhead screw, M4 × 6, St, zinc-plated, PU 100 pieces		**24560-135**	–	
Assembly tool, for EMC gasket, stainless steel (horizontal rails), 1 piece 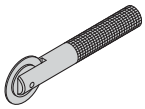		–	**24560-271**	

Note

- Other dimensions of rear hood available on request

Front/rear panels, unshielded

FRONT PANEL EXPRESS

Order Information

04292001

Height U	Height mm	Width HP	Front panel: pre-anodised, cut edges plain, Al, 2.5 mm – 1 piece	Front panel: pre-anodised, cut edges plain, Al, 2.5 mm – 1 piece (SPQ 5)[1]	Front panel: anodised, Al, 2.5 mm – 1 piece	Front panel: anodised, Al, 2.5 mm – 1 piece (SPQ 5)[1]	Front anodised, rear iridescent green chromated, Al, 2.5 mm – 1 piece	Front anodised, rear iridescent green chromated, Al, 2.5 mm – 1 piece (SPQ 5)[1]
1	44.45	28	–	–	–	–	20850-423	–
1	44.45	42	–	–	–	–	20850-424	–
1	44.45	63	–	–	–	–	20850-425	–
1	44.45	84	–	–	–	–	20850-426	–
2	84.0	84	30818-271	–	30807-416	–	30847-461	–
3	128.4	2	–	30810-433	–	30810-432	–	30847-470
3	128.4	3	–	30818-272	–	30807-508	–	30847-471
3	128.4	4	–	30818-273	–	30807-481	–	30838-043
3	128.4	5	–	30818-274	–	30807-510	–	30838-044
3	128.4	6	–	30818-275	–	30807-482	–	30838-045
3	128.4	7	–	30818-276	–	30807-509	–	30838-046
3	128.4	8	–	30818-277	–	30807-484	–	30838-047
3	128.4	10	–	30818-279	–	30807-483	–	30838-049
3	128.4	12	–	30818-281	–	30807-485	–	30838-051
3	128.4	14	–	30818-282	–	30807-501	–	30838-053
3	128.4	21	–	30818-289	–	30807-487	–	30838-060
3	128.4	28	–	30818-296	–	30807-496	–	30838-067
3	128.4	42	30818-310	–	30807-494	–	30838-081	–
3	128.4	63	30818-331	–	30808-067	–	30838-102	–
3	128.4	84	30818-352	–	30807-506	–	30838-123	–
4	172.9	42	–	–	–	–	30847-463	–
4	172.9	63	–	–	–	–	30847-464	–
4	172.9	84	30818-434	–	30807-596	–	30847-465	–
6	261.8	2	–	30818-747	–	30818-741	–	30847-472
6	261.8	4	–	30818-518	–	–	–	30838-124
6	261.8	5	–	–	–	–	–	30838-125
6	261.8	6	–	–	–	–	–	30838-126
6	261.8	7	–	–	–	–	–	30838-127
6	261.8	8	–	30818-522	–	–	–	30838-128
6	261.8	10	–	30818-524	–	30807-753	–	30838-130
6	261.8	12	–	30818-526	–	–	–	30838-132
6	261.8	14	–	30818-528	–	30807-758	–	30838-134
6	261.8	16	–	30818-530	–	–	–	30838-136
6	261.8	21	–	30818-535	–	30807-757	–	30838-141
6	261.8	28	–	30818-542	–	30807-766	–	30838-148
6	261.8	42	30818-556	–	30807-764	–	30838-162	–
6	261.8	63	30818-577	–	30807-771	–	30838-183	–
6	261.8	84	30818-598	–	30807-776	–	30838-204	–
9	395.1	4	–	–	–	–	–	30847-476
9	395.1	8	–	–	–	–	–	30847-480
9	395.1	10	–	–	–	–	–	30847-482
9	395.1	12	–	–	–	–	–	30847-484
9	395.1	84	–	–	–	–	30847-556	–

■Front panel assembly kits, sleeves, collar screws, quick-release fasteners see page 6.65

1) SPQ (standard pack quantity): Part number includes 1 piece, but delivery is exclusively made in standard pack quantity (SPQ); please order at least the SPQ quantity or a multiple

Subracks – europac PRO ServicePLUS

Front/rear panels shieldable with stainless steel EMC gasket

FRONT PANEL EXPRESS

Order Information

04292001

Height U	Height mm	Width HP	Front panel: Front panel for shielding with EMC gasket (stainless steel) – Al, 2.5 mm, front anodized, rear iridescent green chromated, 2 alignment pins pressed-in, St, stainless: 1 piece	1 piece (SPQ 5)[1]	Stainless steel EMC gasket – inserted laterally into the grooves of the front panel, suited for temperatures above 70 °C: PU 10 pieces	PU 100 pieces
2	84	84	**30846-588**	–	**21101-775**	**21101-776**
3	128.4	2	–	**30846-864**	**21101-705**	**21101-706**
3	128.4	3	–	**20846-425**		
3	128.4	4	–	**20846-426**		
3	128.4	5	–	**20846-427**		
3	128.4	6	–	**20846-428**		
3	128.4	7	–	**20846-429**		
3	128.4	8	–	**20846-430**		
3	128.4	10	–	**20846-431**		
3	128.4	12	–	**20846-432**		
3	128.4	14	–	**20846-433**		
3	128.4	21	–	**20846-434**		
3	128.4	28	–	**20846-436**		
3	128.4	42	**20846-437**	–		
3	128.4	63	**20846-438**	–		
3	128.4	84	**30846-676**	–		
4	172.9	42	**30846-681**	–	**21101-713**	**21101-714**
4	172.9	63	**30846-682**	–		
4	172.9	84	**30846-683**	–		
6	261.8	2	–	**30846-865**	**21101-707**	**21101-708**
6	261.8	4	–	**20846-443**		
6	261.8	5	–	**20846-444**		
6	261.8	6	–	**20846-445**		
6	261.8	7	–	**20846-446**		
6	261.8	8	–	**20846-447**		
6	261.8	10	–	**20846-448**		
6	261.8	12	–	**20846-449**		
6	261.8	14	–	**20846-450**		
6	261.8	16	–	**20846-456**		
6	261.8	21	–	**20846-451**		
6	261.8	28	–	**20846-452**		
6	261.8	42	**20846-453**	–		
6	261.8	63	**20846-454**	–		
6	261.8	84	**30846-771**	–		
9	395.1	84	**30846-859**	–	**21101-709**	**21101-710**
Assembly tool, for stainless steel EMC gasket					**24560-270**	

■Front panel assembly kits, sleeves, collar screws, quick-release fasteners see page 6.65

1) SPQ (standard pack quantity): Part number includes 1 piece, but delivery is exclusively made in standard pack quantity (SPQ); please order at least the SPQ quantity or a multiple

Front/rear panels shieldable with textile EMC gasket

FRONT PANEL EXPRESS

Order Information

04292001

Height U	Height mm	Width HP	Front panel: Front panel for shielding with EMC sealing (textile) Al extrusion, 2.5 mm, front anodised,rear conductive; 3, 6 U with alignment pin (not 84 HP) 1 piece	Front panel: Front panel for shielding with EMC sealing (textile) Al extrusion, 2.5 mm, front anodised,rear conductive; 3, 6 U with alignment pin (not 84 HP) 1 piece (SPQ 5)[1]	Front panel: Textile EMC gasket textile gasket, core: foam, sleeve: textile cladding with CuNi coating, UL 94 V-0 PU 10 pieces	Front panel: Textile EMC gasket textile gasket, core: foam, sleeve: textile cladding with CuNi coating, UL 94 V-0 PU 100 pieces
2	84	84	20848-262	–	–	21101-856
3	128.4	2	–	30849-001	21101-853	21101-854
3	128.4	3	–	30849-004		
3	128.4	4	–	30848-354		
3	128.4	5	–	30848-378		
3	128.4	6	–	30848-380		
3	128.4	7	–	30848-382		
3	128.4	8	–	30848-356		
3	128.4	10	–	30848-386		
3	128.4	12	–	30848-358		
3	128.4	14	–	20848-013		
3	128.4	21	–	20848-020		
3	128.4	28	–	20848-027		
3	128.4	42	20848-047	–		
3	128.4	63	20848-068	–		
3	128.4	84	20848-097	–		
4	172.9	28	–	20848-268	21101-858	–
4	172.9	42	20848-269	–		
4	172.9	63	20848-270	–		
4	172.9	84	20848-271	–		
6	261.8	2	–	30849-002	21101-855	21101-856
6	261.8	4	–	30848-355		
6	261.8	5	–	30848-379		
6	261.8	6	–	30848-381		
6	261.8	7	–	30848-383		
6	261.8	8	–	30848-357		
6	261.8	10	–	30848-387		
6	261.8	12	–	30848-359		
6	261.8	14	–	20848-106		
6	261.8	16	–	20848-108		
6	261.8	21	–	20848-113		
6	261.8	28	–	20848-120		
6	261.8	42	20848-139	–		
6	261.8	63	20848-160	–		
6	261.8	84	20848-189	–		
9	395.1	84	20848-280	–	21101-859	21101-904

■Front panel assembly kits, sleeves, collar screws, quick-release fasteners see page 6.65

1) SPQ (standard pack quantity): Part number includes 1 piece, but delivery is exclusively made in standard pack quantity (SPQ); please order at least the SPQ quantity or a multiple

Subracks – europac PRO ServicePLUS

Front panels, hinged and pivoted

Order Information

Height	Width	Front panel, bottom-hinged		Front panel, pivoted
		shielded	unshielded	
		04295001		04295002
		Al, 2.5 mm, front anodised, rear iridescent green chromated; hinge, Zn die-cast, nickel-plated; 2 x sleeve, PA; 2 x knurled screws M2.5 x 12.3, St, nickel-plated; 1 x textile EMC gasket	Al, 2.5 mm, anodised, cut edges plain; hinge, Zn die-cast, nickel-plated; 2 x sleeve, PA; 2 knurled screws M2.5 x 12.3, St, nickel-plated	Al, 2.5 mm, front anodised, rear iridescent green chromated; hinge, die-cast zinc, chrome-plated; textile EMC gasket
U	HP	1 piece	1 piece	1 piece
3	28	**20848-608**	**20838-280**	–
3	42	**20848-599**	**20838-271**	–
3	63	**20848-600**	**20838-272**	–
3	84	**20848-601**	**20838-273**	**20848-611**
4	42	**20848-605**	**20838-277**	–
4	63	**20848-606**	**20838-278**	–
4	84	**20848-607**	**20838-279**	–
6	28	**20848-696**	–	–
6	42	**20848-602**	**20838-274**	–
6	63	**20848-603**	**20838-275**	–
6	84	**20848-604**	**20838-276**	**20848-617**

Note

- Front panel can be removed in opened position (> 135°)

Shielding is required between the following components of a subrack

- Front panel/rear panel and horizontal rail, see page 6.55
- Front panel and 19" bracket/corner profile or in case of depth-offset installation, see page 6.55
- Cover plate/horizontal rail, see page 6.44
- Cover plate/side panel, see from page 6.44
- Horizontal rail/horizontal rail in combined mounting (3 U + 3 U and 6 U), see page 6.59
- Shielding for backplane and side panel see page 6.55

EMC shielding concepts

- Shielding concepts in accordance with IEEE and IEC
- Shielding effectiveness has been determined in various series of measurements in accordance with IEC 61587-3 and can be found online together with the relevant standard product
- The combined use of stainless steel and textile EMC gaskets is functionally possible without any problems

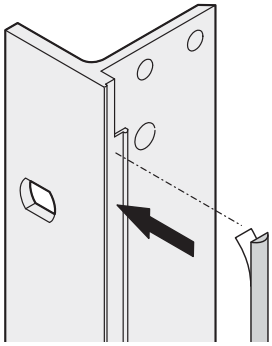

06108073

EMC shielding concept with EMC textile gaskets

- The seal is affixed to the left-hand side of the subrack (viewed from front) or to the front panel profile, respectively
- An EMC gasket with CuNi coating assures a long-term high level of shielding, typically 40 dB at 2 GHz
- Temperature-resistant adhesive layer is protected by a removable film
- Rear shielding is obtained using front panels or a rear hood
- Temperature range -40° C ... +70° C
- **Note:** rear hood and corner profile cannot be used simultaneously

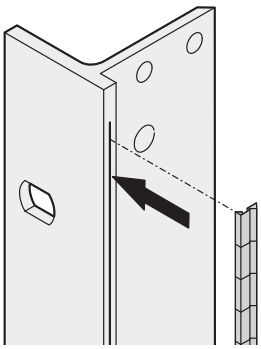

06108074

EMC shielding concept with stainless steel EMC gaskets)

- Symmetrical arrangement of EMC gaskets on the left and right hand sides of subrack and front panel
- Shielding: typically 40 dB at 2 GHz
- Can be used for temperatures above +70° C
- **Note:** rear hood and corner profile cannot be used simultaneously

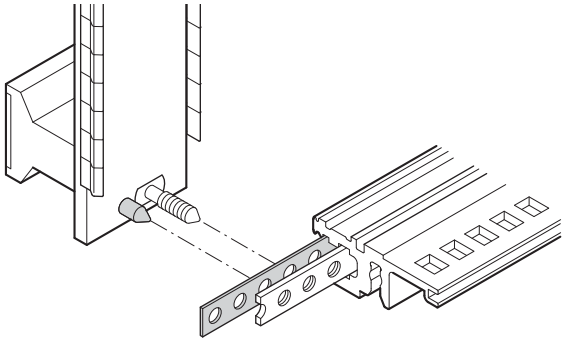

06112091

Front panel shielding concept

- Front panels are available for textile or stainless steel EMC gasket options
- Alignment pins are pressed-in in the front panel to position the gaskets securely and to compress them evenly
- An alignment pin positions the perforated strip in the horizontal rail
- Alignment pin and perforated strip provide an optimal positioning of the shielded assemblies; the front panels are not forced sideways by the shielding elements (Schroff patent)

Subracks – europac PRO ServicePLUS

EMC gaskets between front/rear panel and horizontal rail

Order Information

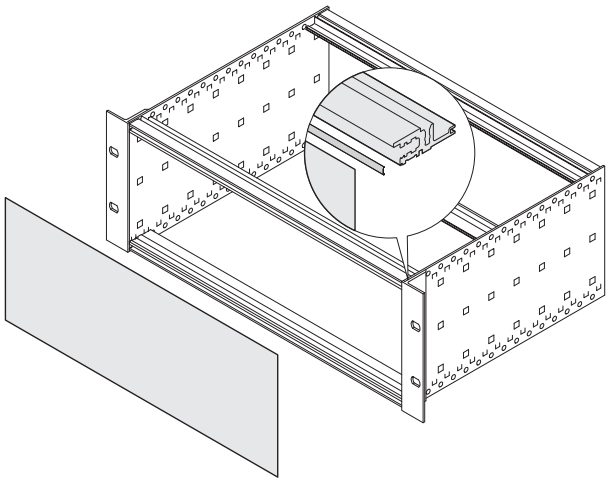

Stainless steel EMC gasket between front panel/rear panel and horizontal rail

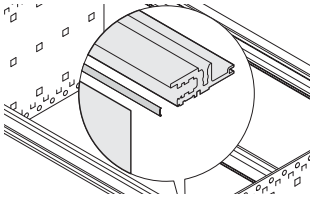

stainless steel; for front and rear horizontal rails (type VT)

Width HP	Depth mm	PU 10 pieces	PU 100 pieces
28	131.8	**24560-229**	–
42	202.9	**24560-231**	–
63	304.5	**24560-233**	–
84	416.6	**24560-235**	**24560-236**

EMC gaskets between front panel and 19" bracket/corner profile

Order Information

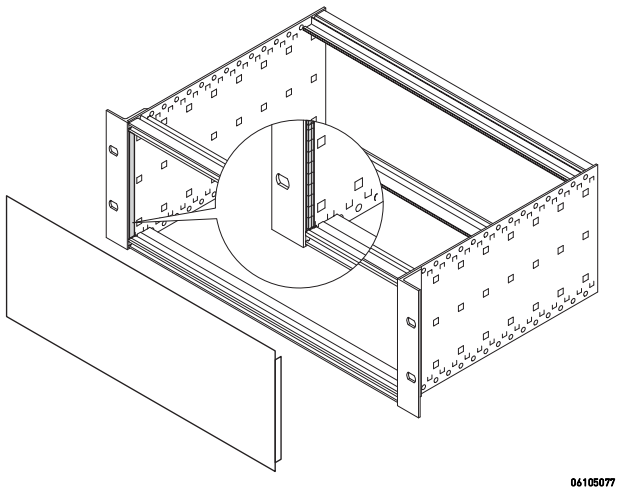

Stainless steel EMC gasket between front panel/rear panel and 19" bracket/corner profile

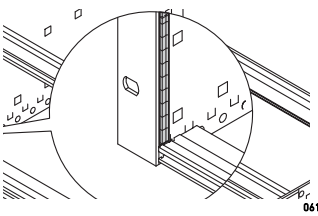

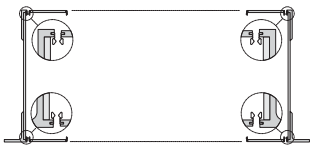

inserted laterally into the grooves of the front panel

Textile EMC gasket between front panel/rear panel and 19" bracket/corner profile

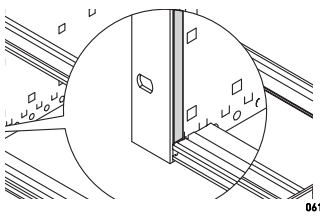

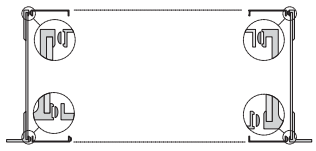

textile gasket, core: foam, sleeve: textile cladding with CuNi coating, UL 94 V-0

Height U	Depth mm	PU 10 pieces	PU 100 pieces	PU 10 pieces	PU 100 pieces
3	97.5	**21101-705**	**21101-706**	**21101-853**	**21101-854**
4	142.5	**21101-713**	**21101-714**	**21101-858**	–
6	232.5	**21101-707**	**21101-708**	**21101-855**	**21101-856**
9	365.0	**21101-709**	**21101-710**	**21101-859**	**21101-904**
Assembly tool, for stainless steel EMC gasket 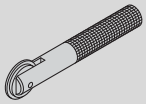		**24560-270**		–	

EMC gaskets between horizontal rail and horizontal rail

Order Information

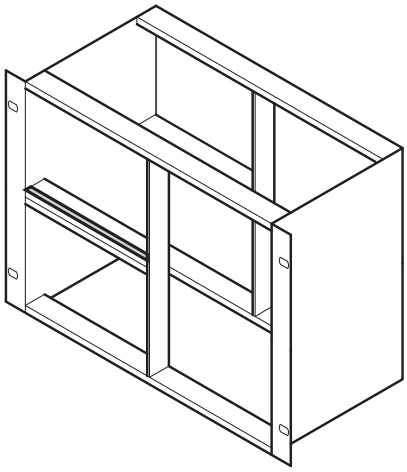

Stainless steel EMC gasket between horizontal rail and horizontal rail

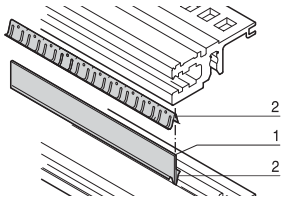

Item 1: cover strip, Al, 1 mm,
item 2: 2 x EMC seals (stainless steel);
for shielding of 2 horizontal rails positioned directly one above the other
if assembly area is divided vertically

Width HP	Depth mm	PU 1 kit
20	107.0	**24562-520**
28	147.0	**24562-528**
40	208.0	**24562-540**
42	218.0	**24562-542**
63	325.0	**24562-563**
84	431.0	**24562-584**

1) SPQ (standard pack quantity): Part number includes 1 piece, but delivery is exclusively made in standard pack quantity (SPQ);
please order at least the SPQ quantity or a multiple

EMC gaskets between front panel and side panel (depth-offset installation)

Order Information

Stainless steel EMC gasket between front panel and side panel (depth-offset installation)

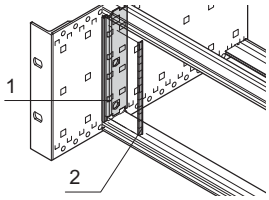

Item 1: 2 x support profiles, Al extrusion;
item 2: 2 x stainless steel EMC gasket;
fixing material kit for vertical EMC shielding between depth-offset shielded front panels and side panel

Textile EMC gasket between front panel and side panel (depth-offset installation)

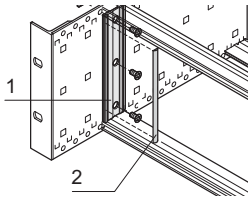

Item 1: 2 x support profiles, Al extrusion;
item 2: 1 x EMC textile gasket;
fixing material kit for vertical EMC shielding between depth-offset shielded front panels and side panel

Height U	Depth mm	PU 1 kit	PU 1 kit
3	97.5	**24562-199**	**24560-180**
4	142.5	24562-299	**24560-280**
6	187.5	**24562-499**	**24560-480**
Assembly tool, for stainless steel EMC gasket 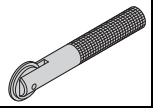		**24560-270**	–

Subracks – europacPROServicePLUS

EMC gaskets between backplane and side panel

Order Information

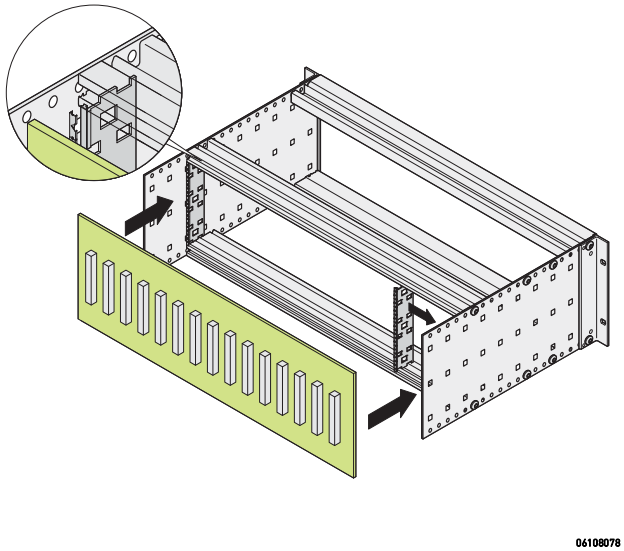

Stainless steel EMC gasket
between backplane and side panel (depth-offset installation)

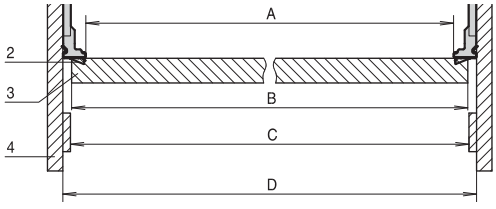

2 x support profile, Al extrusion,
2 x EMC gasket (stainless steel)
Fixing materials kit and user manual;
for vertical EMC shielding between shielded backplane and side panel;

dimensions (84 HP):
A = 425.8 mm,
B < 429.9 mm,
C = 429.8 mm,
D = 431.8 mm

Height U	PU 1 kit
3	**24561-199**
6	**24561-499**

- With an appropriate design the backplane can be used as shielding rear panel; for that purpose a rear horizontal rail (type L-VT or H-VT) for depth-offset installation must be used to ensure the horizontal contact
- For vertical contact the support profile can be fixed to the europacPRO side panel (depth grid 30 mm)

Special interior mounting parts

- Combined mounting: 3 U + 3 U and 6 U, see page 6.59
- Horizontal board mounting, see page 6.60
- Mounting plates, see page 6.61
- Central locking for PCBs, see page 6.62
- Divider plates, see page 6.62
- Air baffles, see page 6.63
- Telescopic slides, see page 6.64
- Fixing parts (bolts, nuts, assembly tools), see page 6.63

Subracks – europacPROServicePLUS

Combined mounting (6 U and 2 x 3 U one above the other)

Order Information

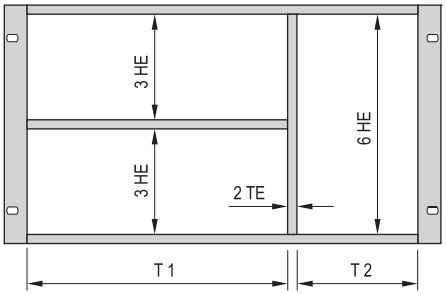 bza42182 **Width pitch T1:T2**	**Combined mounting:** **horizontal and vertical subdivision (incl. front panel for stainless steel EMC gasket)** 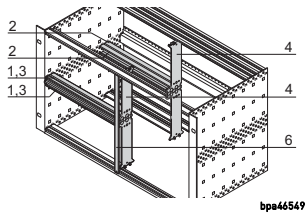 bpa46549 Item 1: 2 front horizontal rails (H-KD), Al extrusion, anodised; item 2: 2 rear horizontal rails (AB), Al extrusion, anodised; item 3: threaded inserts, St, zinc-plated; item 4: Zn die-cast support members; item 6: front panel 2 HP, 6 U, with EMC stainless steel gasket; 84:0 without items 4, 5 Note see below 2)	**Alternative front panels for combined mounting** **unshielded front panel, 6 U, 2 HP item 6** 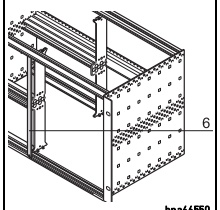 bpa46550 Al, 2.5 mm, front anodised, rear iridescent green chromated	**front panel for textile EMC gasket, 6 U, 2 HP item 6** 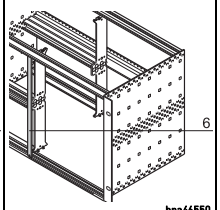 bpa46550 Al, 2.5 mm, U-profile with notch, 6 U, 2 HP	**Splitting extrusion** **for combined mounting item 2** 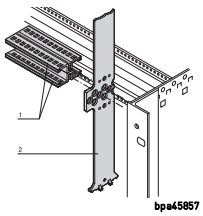 bpa45857 6 U, die-cast zinc; splitting extrusion is inserted in the grid holes of the horizontal rail; the splitting extrusion can be bolted
HP	**PU 1 kit**	**1 (SPQ 5)**	**1 piece (SPQ 5)[1)]**	**1 piece**
20:62	**24562-420**	**30847-472**	**30849-140**	**64560-010**
40:42	**24562-440**			
42:40	**24562-442**			
63:19	**24562-463**			
84:0	**24562-484**			
Torx countersunk screw M4 × 14, zinc-plated, PU 100 pieces to fixsplitting extrusion/horizontal rail	–	–	–	**24560-145**
Panhead screw M2.5 × 10, St, zinc-plated, PU 100 pieces to fix horizontal rail/splitting extrusion	–	–	–	**24560-179**
Pozidrive/slotted collar screw M2.5 x 12.3, St, nickel-plated, PU 100 pieces	–	**21101-101**	**21101-101**	–
Pozidrive/slotted collar screw M2.5, black, zinc-plated, PU 100 pieces	–	**21101-102**	**21101-102**	–
Washer 2.7 x 5 x 1, PA 6, PU 100 pieces	–	**21101-121**	**21101-121**	–
Textile gasket, core: foam, sleeve: textile cladding with CuNi coating, UL 94 V-0 PU 10 pieces	–	–	**21101-855**	–

2) The following guide rails cannot be used: type "accessory", type "accessory, strengthened" and type "for 4.4" PCB"

- Subdivision of the 6 U assembly area into:
  - 2 x 3 U
  - 1 x 6 U
- Designed to accomodate euroboards (100 mm high) and double euroboards (233.35 mm high)

Note

- Please order EMC gasketing kit for horizontal rails separately, see page 6.56
- Please order perforated strips for horizontal rails separately, see page 6.35
- Please order rear centre horizontal rail separately, see page 6.33

Subracks – europac PRO ServicePLUS

Horizontal board mounting in 3 or 4 U subrack

Order Information

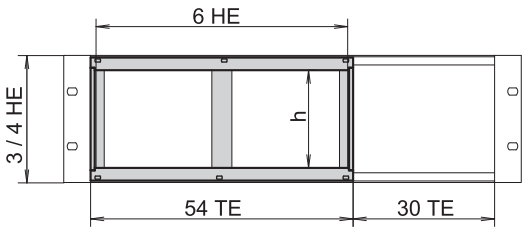

(1 TE = 1 HP, 1 HE = 1 U)

bpa45914

Height U	Usable height h HP	Mounting variants: Horizontal rail, front	Mounting variants: Horizontal rail, rear	Horizontal board mounting in 3 or 4 U subrack: Board cage	Front frame for EMC shielding	Front frame, unshielded
				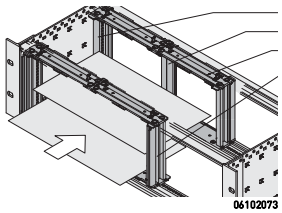 06102073	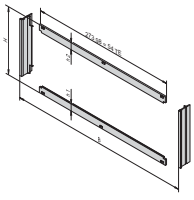 bpa45913	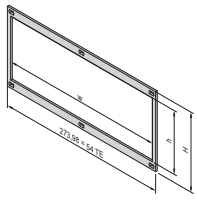 bza43061
				Struts, die-cast zinc; horizontal rails front and rear; threaded inserts, St, zinc-plated; fixing material kit; for horizontal mounting of double-height euroboards in 3 or 4 U high subracks/cases; 54 HP space required; **please order front frame for EMC shielding separately**	2 horizontal covers, Al 2.5 mm, front anodised, rear iridescent green chromated; 2 vertical trims, Al extrusion, passivated; stainless steel EMC gasket; front frame provides the contact between subrack and the sub-assemblies	Al, 2.5 mm, clear anodised; front frame with cut-out, clear internal width w = 266.35 mm
				PU 1 kit	PU 1 kit	1 piece
3	20			**24564-117**	**24564-109**	34564-108
3	20			**24564-118**	**24564-109**	34564-109
4	28			**24564-217**	**24564-209**	**34564-208**
Assembly tool, for stainless steel EMC gasket		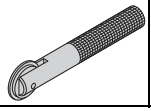		–	**24560-270**	–

* For direct backplane mounting

Note

- Please order front frame for EMC shielding separately

Subracks – europac PRO ServicePLUS

Mounting plates

Order Information

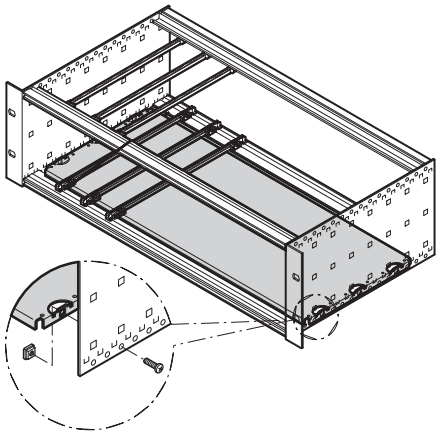 bpa45875			Mounting plate can be used in combination with cover plate 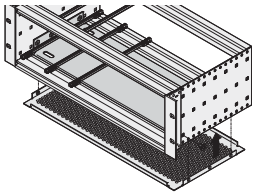 06108080	Mounting plate for use without cover plate 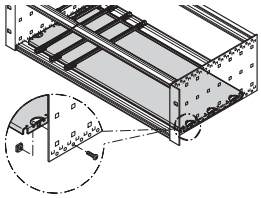 bpa45875	Fixing strip for partial widths 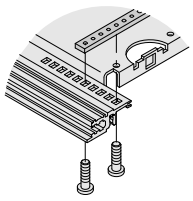 bpa46557
Width W HP	W mm	Board length mm	1 piece	1 piece	1 piece
28	146.88	160	34563-001	**34562-745**	**30840-021**
28	146.88	220	**34563-009**	**34562-749**	**30840-033**
28	146.88	280	–	**34562-753**	**30840-045**
28	146.88	340	–	**34562-757**	**30840-057**
42	217.99	160	**34563-002**	**34562-746**	**30840-021**
42	217.99	220	**34563-014**	**34562-750**	**30840-033**
42	217.99	280	–	**34562-754**	**30840-045**
42	217.99	340	–	**34562-758**	**30840-057**
63	324.67	160	**34563-003**	**34562-747**	**30840-021**
63	324.67	220	**34563-019**	**34562-751**	**30840-033**
63	324.67	280	–	**34562-755**	**30840-045**
63	324.67	340	–	**34562-759**	**30840-057**
84	431.35	160	**34563-004**	**34562-748**	**30840-021**
84	431.35	220	**34563-024**	**34562-752**	**30840-033**
84	431.35	280	–	**34562-756**	**30840-045**
84	431.35	340	–	**34562-760**	**30840-057**
Assembly kit for mounting plate, PU 1 kit (Torx countersunk screw M4 x 5, St, zinc-plated, 12 pieces; screw M4 x 6, St, zinc-plated, 10 pieces; square nut M4, St, zinc-plated, 10 pieces)			**24560-184**	**24560-184**	–
Assembly kit for fixing strips for partial width mounting plates Torx screw M2.5 × 5, St, zinc-plated, PU 100 pieces			–	–	**24560-146**

Al, 1.5 mm;
mounting is only possible over the entire width between the side panels; width of mounting plate = W - 9.71 mm

Al, 1.5 mm;
for mounting over partial width, please order fixing strips separately

St, 2.5 mm, zinc-plated;
is bolted from front to rear onto the horizontal rails;
to fix mounting plates

Note

- For installation and fixing of heavy components
- In addition to the mounting plate, (EMC) cover plates can also be fitted to the subrack
- The mounting plate is as wide as the subrack or system case and is fixed to the side panels
- A guide rail can be fitted on the first and last slot
- Guide rails type "4.4" and type "strengthened" cannot be used

Central locking

Order Information

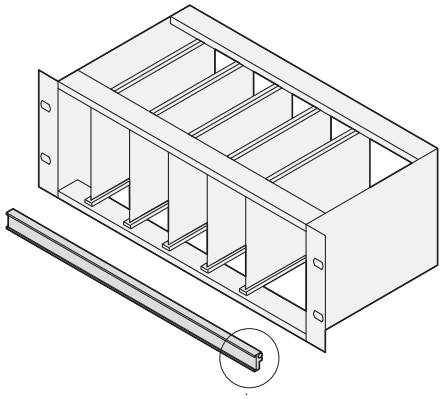

06197010

Central locking
for PCBs without front panels

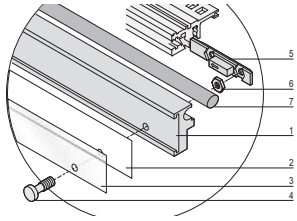

bza45819

Item 1: central rail, Al, anodised;
item 2: ID cardboard, white;
item 3: transparent cover strip, plastic;
item 4: 2 x knurled screw;
item 5: 2 x slide nut;
item 6: 2 x hexagon nut M2.5;
item 7: rubber gasket;
central locking allows joint locking of PCBs and serves as identification strip;
can be fitted to front and rear horizontal rails,
suitable for 84 HP width

Width HP	Length mm	1 piece
84	426.0	24560-167

Divider plate

Order Information

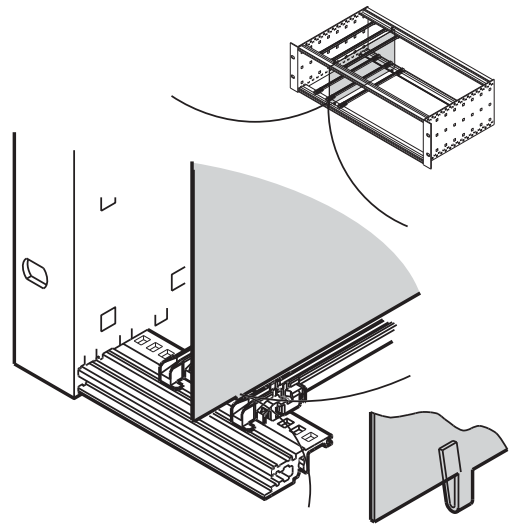

bpa45912

Divider plate

Mounting position when stainless steel EMC gasket is used

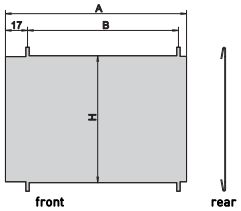

bpa45911

Mounting position when textile EMC gasket is used

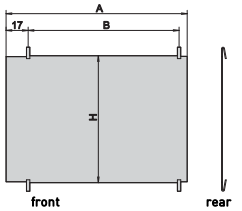

06105078

Stainless steel, 1 mm, is mounted by clipping onto horizontal rail,
space requirement on component side 2 mm;
mounting direction varies with shielding design (EMC stainless steel or textile gasket);
retrofitting the divider plate in an already-assembled subrack/case
will first require dismantling of the horizontal rails;
where front panels are unshielded, both mounting directions are possible

Height U	Depth mm	A mm	B mm	H mm	PU 10 pieces
3	160	158.3	135.0	113.5	34562-761
3	220	218.3	195.0	113.5	34562-762
6	160	158.3	135.0	246.9	34562-763
6	220	218.3	195.0	246.9	34562-764

Subracks – europac PRO ServicePLUS

Air baffles for slots

Order Information

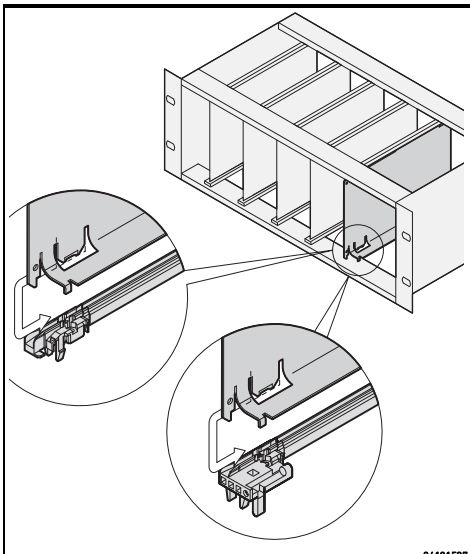

Depth mm	Width HP	Height U	Air baffle without front panel	Air baffle with front panel: Front panel with lateral groove for stainless steel EMC gasket	Air baffle with front panel: U front panel for textile EMC gasket
			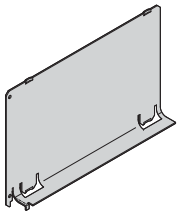 06108085	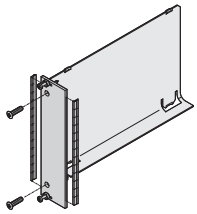 06108087	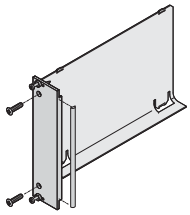 06108088
			Al, 1 mm, incl. fixing material kit; prevents an air short circuit in unused slot positions; is pushed into the groove of the guide rail	Air baffle, Al, 1 mm; front panel, Al, 2.5 mm, front anodised, rear conductive; stainless steel EMC gasket; fixing material kit prevents an air short circuit in unused slot positions; is pushed into the groove of the guide rail	Air baffle, Al, 1 mm, front panel, Al extrusion, 2.5 mm, front anodised, rear conductive; textile EMC gasket, fixing material kit prevents an air short circuit in unused slot positions; is pushed into the groove ofthe guide rail
			1 piece	1 piece	1 piece
160	4	3	**34562-823**	**20848-712**	**20848-728**
160	4	6	**34562-826**	**20848-720**	**20848-736**
160	8	3	**34562-833**	20848-714	20848-730
160	8	6	**34562-836**	20848-722	20848-738
160	12	3	**34562-843**	20848-716	20848-732
160	12	6	**34562-846**	20848-724	20848-740
220	4	3	**34562-824**	20848-713	20848-729
220	4	6	34562-827	20848-721	20848-737
220	8	3	34562-834	20848-715	20848-731
220	8	6	34562-837	20848-723	20848-739
220	12	3	34562-844	20848-717	20848-733
220	12	6	34562-847	20848-725	20848-741
Assembly tool for stainless steel EMC gasket, 1 piece 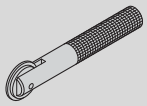			–	**24560-270**	–

Note

- Air baffle for 280 mm deep and for 80 mm rear I/O boards available on request

Subracks – europac PRO ServicePLUS

Simple telescopic slide for assembly of subracks in cabinets

- For mounting 84 HP wide subracks in the 19" plane
- Loading capacity: 25 kg per pair
- The guiding profile is matched to the fixing dimension in the cabinet (it is bolted to the 19" profile of the cabinet); the adaptor rail is matched to the depth and fixing dimension on the subrack (it is inserted into the guiding profile like a telescopic slide)
- Safety note:
  No protection against extraction, no stop at full extension

Order Information

Telescopic slides with guiding profile for fitting in cabinets

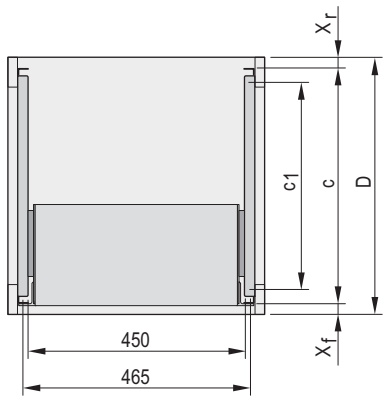

Description	Depth D mm	x_f mm	x_r mm	C mm	c1 mm	Part no.
VARISTAR	600	50	50	500	369	**24562-464**
VARISTAR	800	50	50	700	569	**24562-466**
VARISTAR	900	50	50	800	669	**24562-467**
VARISTAR	1000	50	50	900	769	**24562-468**
VARISTAR	1100	50	50	1000	869	**24562-472**
VARISTAR	1200	50	50	1100	969	**24562-473**
eurorack	600	60	60	480	397	**24562-449**
eurorack	800	60	60	680	597	**24562-451**
eurorack	900	60	60	780	697	**24562-452**
NOVASTAR	500	33	60	407	350	**24562-460**
NOVASTAR	600	33	60	507	450	**24562-461**
NOVASTAR	800	33	60	707	650	24562-474
Lab rack	250	0	0	250	162	**24562-446**

x_f, x_r: Distance of 19" plane to cabinet edge (front, rear)
c: Distance of 19" planes from each other,
c1: Fixing dimension of guiding profile on 19" panel/slide mounts

Order Information

Telescopic slides with adaptor rail for subracks

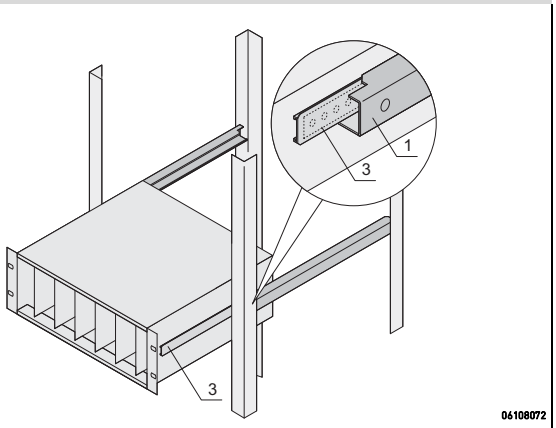

For subrack depth mm	Part no.
175	**24562-453**
235	**24562-454**
295	**24562-455**
355	**24562-456**
415	**24562-457**
475	**24562-458**

Subracks – europacPROServicePLUS

Assembly parts

- Quick-release fasteners
- Sleeves
- Screws
- Cage nuts
- Tools

Quick-release fasteners

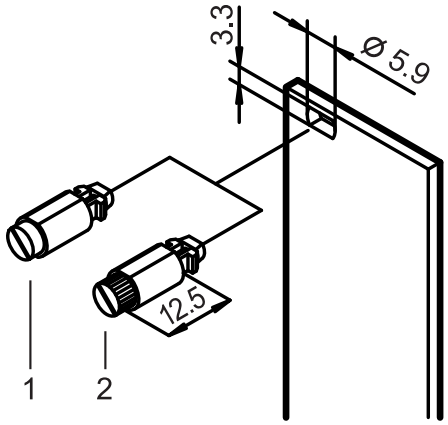

06702062

- Vibration and shock proof
- 1/4 rotary lock with defined stop
- Detection of locking position through slot position

Delivery comprises

Qty	Description
1	Locking pin, St, locking, Zn die-cast
1	Press-in sleeve, POM

Order Information

Item	Description	Qty/PU	Part no.
1	With slotted head, grey	100	**21101-847**
1	With slotted head, black	100	**21101-848**
2	With knurled and slotted head, grey	100	**21101-849**
2	With knurled and slotted head, black	100	**21101-850**

Note

Quick-release fasteners: mounting without threaded inserts

Sleeves

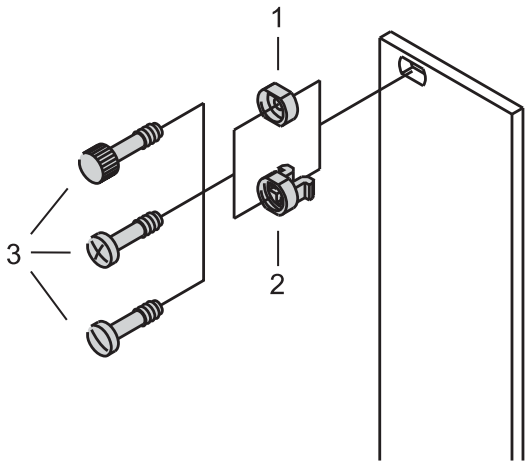

06702061

Order Information

Item	Description	Qty/PU	Part no.
2	Plastic sleeve, PA, grey	100	**21100-464**
2	Plastic sleeve, PA, black	100	**21100-591**
1	Metal sleeve, brass, nickel-plated	10	**21100-659**
1	Metal sleeve, brass, nickel-plated	100	**21100-660**
1	Metal sleeve, brass, black	100	**21100-886**
1	Metal sleeve, stainless steel	10	**21100-661**
1	Metal sleeve, stainless steel	100	**21100-662**

Note

- Metal sleeves must be pressed-in in front panels
- Sleeve does not fit in 2 HP wide front panels

Collar screws

Order Information

	Description	Application	Material	Dimension	Qty/PU	Part no.
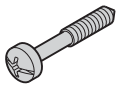 AZA46586	Collar screw with pozidrive/slot	For mounting of front panels when using threaded inserts	St, nickel-plated	M2.5 x 12.3	100	**21101-101**
			St, zinc-plated, black	M2.5 x 12.3	100	**21101-102**
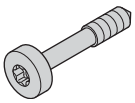 AZA45941	Torx collar screw	For mounting of front panels when using threaded inserts	St, nickel-plated	M2.5 x 12.3	100	**21101-782**
			St, zinc-plated, black	M2.5 x 12.3	100	**21101-783**
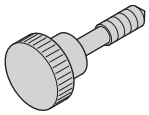 aza45929	Collar screw with knurled head	For mounting of front panels when using threaded inserts	Brass, nickel-plated	M2.5 x 12.3	100	**21101-749**
		For mounting of front panels when using threaded inserts for horizontal rails with long lip	Brass, nickel-plated	M2.5 x 12.3	100	**21101-909**

Torx screws, self-forming

Order Information

	Description	Application	Material	Dimension	Qty/PU	Part no.
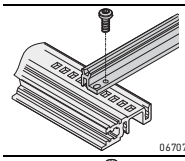 06707058	Torx panhead screw, self-forming	For extra-robust Al guide rails; torque max. 0.2 Nm	St, zinc flake coating, black	2.5 x 7.3	100	**24560-157**
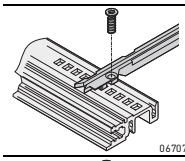 06707058	Torx countersunk screw, self-forming	For 4.4" board height, guide rail on horizontal rail, europacPRO, ratiopacPRO; torque max. 0.2 Nm	St, zinc-plated	2.5 x 7.7	100	**24560-158**
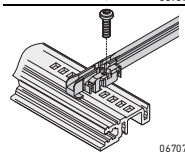 06707058	Torx panhead screw, self-forming	For plastic guide rail on horizontal rail; for panel bracket on horizontal rail; torque max. 0.2 Nm	St, zinc-plated	2.5 x 9.3	100	**24560-141**
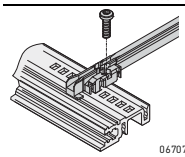 06707058	Torx panhead screw, self-locking	For plastic guide rails on horizontal rails	St, zinc-plated	2.5 × 9.3	100	**21500-039**
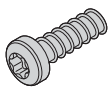 06707058	Torx panhead screw	For 6 U support member, backplane mounting, centre horizontal rail	St, zinc-plated	2.5 × 10	100	**24560-179**

Subracks – europacPROServicePLUS

Countersunk screws

Order Information

	Description	Application	Material	Dimension	Qty/PU	Part no.
AZA46585	Torx screw	For support profiles europacPRO, ratiopacPRO	St, zinc-plated	M4 x 5	100	**24560-139**
		For mixed board assembly and assembly of shortened horizontal rail on support member, with GND/earthing function	St, zinc-plated	M4 x 14	100	**24560-145**

Torx panhead screws

Order Information

	Description	Application	Material	Dimension	Qty/PU	Part no.
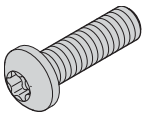 aza45940	Torx panhead screw	For Z-rails and connector assembly	St, nickel-plated	M2.5 x 7	100	**24560-147**
		For perforated rails	St, nickel-plated	M2.5 x 10	100	**24560-148**
		For backplane mounting	St, nickel-plated	M2.5 x 12	100	**24560-161**
			St, nickel-plated	M2.5 x 14	100	**24560-162**
aza45178	Washer	For insulated backplane mounting	Plastic, PA	2.8 x 6.3 x 2	100	**21101-964**
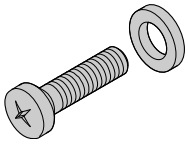 aza45940	Screw + plastic washer (PA)	For backplane mounting	St, nickel-plated	M2.5 x 12	100	**21100-777**
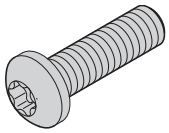 aza45940	Torx panhead screw	To bolt on support bracket, rear hood, corner profile on side panel, lengthening bracket and connecting bracket	St, zinc-plated	M4 x 6	100	**24560-135**
		To bolt-on cover plate or mounting plate, with GND/earthing function	St, zinc-plated	M4 x 6	100	**24560-151**
		To bolt-on cover plate or mounting plate, with GND/earthing function, self-forming thread	St, zinc-plated	M4 × 6	100	**21101-884**
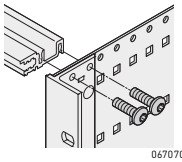 06707058	Torx panhead screw	For horizontal rail on side panel if guide rails are bolted to slot 1	St, zinc-plated	M4 x 10	100	**24560-155**
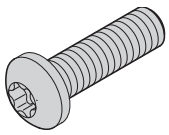 aza45940		For horizontal rail on side panel, with GND/earthing function	St, zinc-plated	M4 × 14	10	**24560-131**
		For horizontal rail on side panel, with GND/earthing function	St, zinc-plated	M4 x 14	100	**24560-130**

Grub screws

Order Information

	Description	Application	Material	Dimension	Qty/PU	Part no.
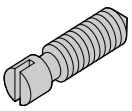 06702053	Grub screw	For threaded inserts M2.5 and perforated strips	Stainless steel	M2.5 x 9	100	**21101-359**
		For threaded inserts M2.5	St, nickel-plated	M2.5 x 8	100	**21100-276**
		For threaded inserts M3	St, zinc-plated	M3.0 x 8	100	**21100-646**

Square nuts

Order Information

	Description	Application	Material	Dimension	Qty/PU	Part no.
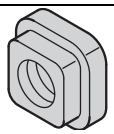 AZA45921	Square nut	For fixing: parts to side panels, support profiles, mounting plates	St, zinc-plated	M4	100	**24560-140**

Assembly kits

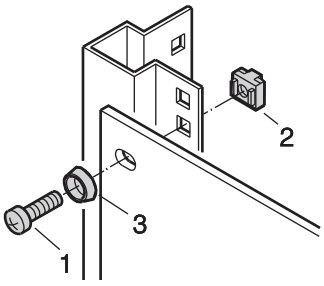

SC128XXX

- For assembly of subracks in cabinets or 19" cases
- For assembly of desk-top cases in cabinets by means of 19" brackets

Delivery comprises (kit)

Item	Qty	Description
1	1	Pozidrive screw M6 × 16, zinc-plated
2	1	Plastic washer, ABS, black
3	1	Cage nut M6, zinc-plated

Order Information

Description	Part no.
PU = 8 × screw, washer, nut	**21100-435**
PU = 50 each of M6 screw, washer and cage nut	**21101-809**
PU = 100 each of M6 screw, washer and cage nut	**21101-810**

- For 19" brackets with material thickness of 1.5 mm, see "Assembly kits" in chapter Cabinet accessories

Subracks – europacPROServicePLUS

Slide, to accomodate 2 nuts

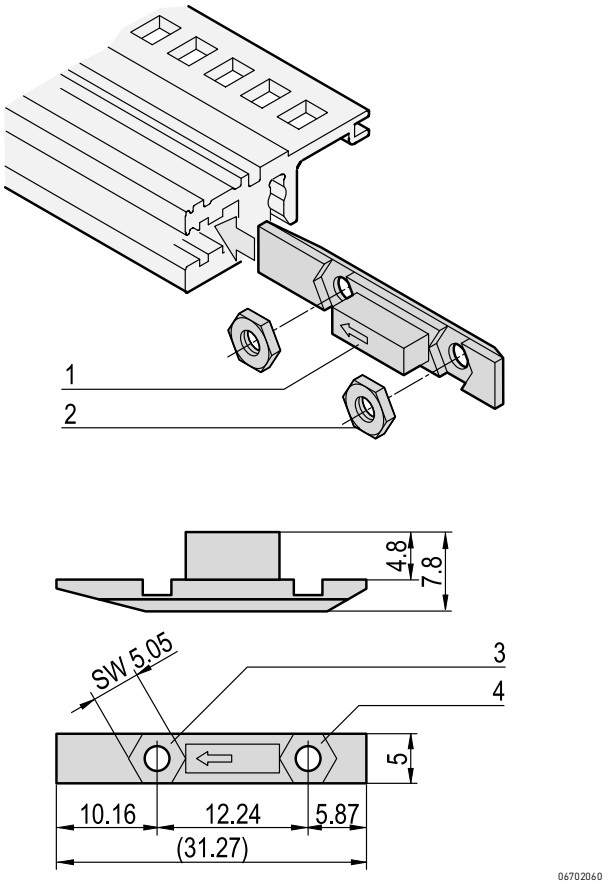

- The slide is pushed into the groove of the horizontal rail to front or rear (type VT)

Delivery comprises (kit)

Item	Qty	Description
1	1	Slide, PBT, red, UL 94 V-0
2	2	Nut, M2.5, St, zinc-plated

Order Information

Description		Part no.
Slide nut kit 1	100 slides/200 nuts	**24560-165**
Slide nut kit 2	12 slides/24 nuts	**24560-166**

Note

- Nuts used in item 3 suitable for:
  - hinged front panels, 84 HP
  - front or rear panels, 84 HP
- Nuts used in item 4 suitable for:
  - hinged front panels
- Nuts used in item 3 and 4 suitable for:
  - two front panels

Assembly tools

Order Information

	Description	Application	Dimension	Qty/PU	Part no.
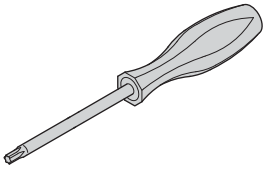 AZA45925	Torx screwdriver	T 8 torx	T8	1	**64560-026**
		T 20 torx	T20	1	**64560-027**
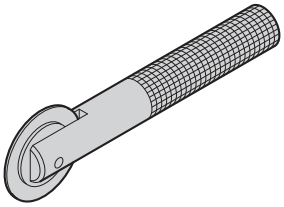 aza45938	Assembly tool	Exclusively to fix stainless steel EMC gaskets in horizontal rails	–	1	**24560-271**
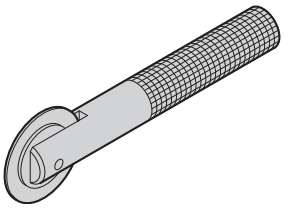 aza45937	Assembly tool	To fix stainless steel EMC gaskets on front panels with lateral slots	–	1	**24560-270**

Note

- Assembly tool to insert keying/coding pegs in guide rails is available on request

Tape measure

32506001

- Measuring tape with cm, U-, HP-division (length 2 m)
- Plastic housing, metal measuring tape with automatic collection

Order Information

Description	Qty/PU piece	Part no.
Tape measure	1	**89009-001**

Subracks – europac PRO ServicePLUS

Application examples

Application: Transportation/defense sectors

06108006

- Mounting frame to accomodate a 36 HP wide railway subrack, frame from stainless steel

06103001

- Robust assembly by double bolt-on fixing
- Lateral ducting in cabinet
- Combined mounting 6 U+ 2 x 3 U

Application: Measurement, control and instrumentation sectors

06108002

- Combined mounting with 2 x 3 U in 6 U
- Divider plate to separate different sections
- Installation with strengthened guide rails

06108003

- Subrack with additional telescopic fan unit
- Adaptation at bottom and top integrated into the side panel

Application: Telecoms sectors

06112023

- Shielded subrack for special applications with mounting plate, cover and base plate
- Mounting plate for heavy assemblies

06101005

- Subrack with plastic cable ducting for fibre optic cables
- Terminal area at top

Content

Cabinets 1
Wall mounted cases 2
Accessories for cabinets and wall mounted cases . 3
Climate control . 4
Electronics cases 5
Subracks/ 19" chassis 6
Front panels, plug-in units . . . 7
Systems 8
Power supply units 9
Backplanes . . . 10
Connectors, front panel component system 11
Appendix 12

Subracks – *europac PRO* for railway applications

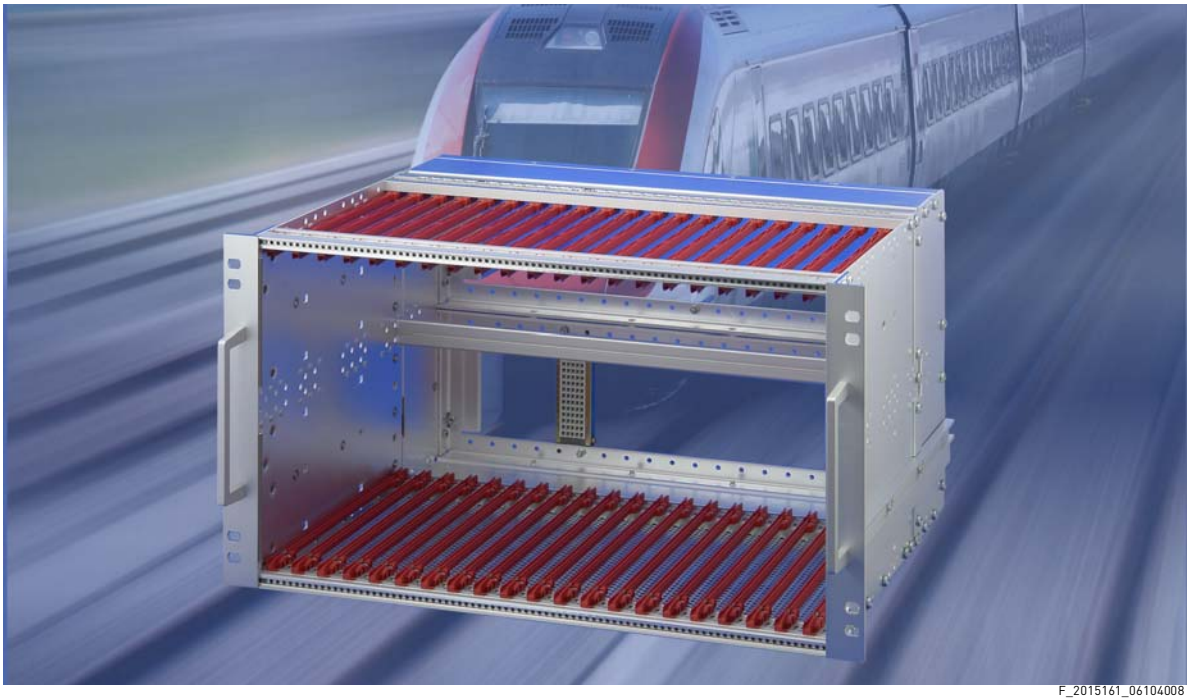

F_2015161_06104008

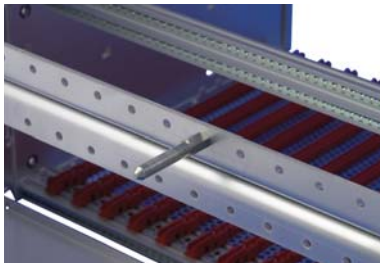

06108013

An alignment pin to NFF standard allows the easy installation of the subracks

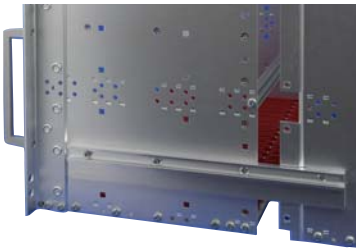

06108014

Lateral support bars to NFF standard facilitate insertion of subrack into the (cabinet) frame

06108015

The 19" bracket is firmly fixed to the side panel (tox-cold welded) and is especially suited for high mechanical stresses(vibration resistance)

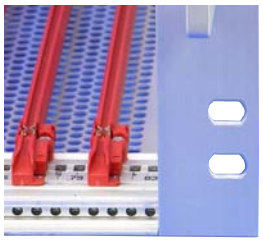

06108016

The double 19" screwing position adds to additionally safety (NFF standard)

06108017

The cut-out in the side panel allows to retrofit the threaded insert, also if the side panels are already assembled

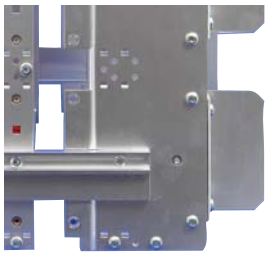

06108015

The rear brackets have two functions:
- push-in aid and
- transport protection for the connectors

The removable rear hood allows a fast cabling between backplane and connector

Subracks – europacPRO for railway applications

Overview 6.70

19" subrack for mobile rail applications

- Shock and vibration resistance to IEC 61587-1, EN 50155, NF F 61-005 / NF F 60-002, BN 411002 and BN 411003
- Versions for CompactPCI applications
- Best suited for high mechanical demands

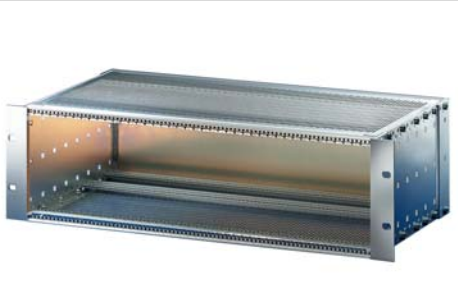

06102008

BN 411002, 411003 subracks

- Height 3 U and 6 U
- Width 84 HP
- Unshielded and shielded versions

BN 411002/-003 subracks
unshielded 6.73
shielded 6.74

06104006

EN 50155 subrack

- Height 3 U and 6 U
- Width 84 HP
- Unshielded and shielded versions
- Shielded versions for CompactPCI applications

EN 50155 subracks
unshielded 6.75
shielded 6.76
shielded, for CompactPCI 6.77

06104003

SNCF subrack

- Height 3 U and 6 U
- Width 9 T (36 HP) and 21 T (84 HP)
- Unshielded and shielded versions
- Shielded versions for CompactPCI applications

SNCF subracks
unshielded 6.78
shielded 6.79
shielded, for CompactPCI 6.80

Accessories
Guide rails 6.81
Cover plates 6.82
General accessories in europacPRO section 6.17

30407004

ServicePLUS from page 6.84

e.g. modification (cut-outs)
e.g. downloads (CAD drawings, user manuals, test reports)
e.g. custom solutions (special depths, electromagnetically shielded applications)

www.schroff.biz/ServicePLUS

ServicePLUS ... 6.84
Application examples 6.85

europacPRO ... 6.6
europacPRO for industrial applications 6.86
europacPRO for rugged applications 6.92

Subracks – europac PRO for railway applications

Subrack for mobile rail applications

Solid mechanical construction

Electronics for mobile applications require robust mechanical construction that can withstand extreme environmental conditions. Our enclosure solutions protect the housed electronics thanks to their high mechanical strength and thus are an important element for secure and trouble-free operation of the entire system. Only dependability, down to the last detail, can make complex safety tasks achievable - and also economic.

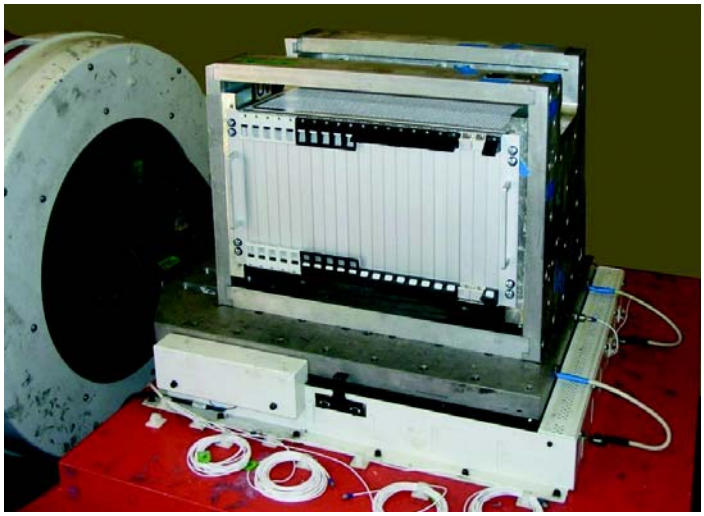

Shock and vibration resistance

Schroff products assure shock and vibration resistance in mobile applications e.g. by suitable material thicknesses and fixing elements. Tested with typical loads, they offer the best conditions for secure and reliable functioning in individual applications and projects.

Certification of mechanics

High-quality, robust and durable products are an important component for the certification of a complete application in accordance with the European Railway Standard DIN EN 50155, the German Railway Standards BN 411002 and BN 411003 and the French Railway Standards NF F 61-005 and NF F 60-002.

Note

fer = ferroviaire (French) = railway
1 T = 4 HP = 20.32 mm

Railway Technology brochure

A large amount of general information on our railway systems solutions can be found at www.schroff.co.uk/railway/ and in our "Railway Systems" brochure.

TÜV test report

Subracks – europac PRO for railway applications

Kit, unshielded, 'heavy', for backplane mounting

06102007

Without front handle

06111003

With front handle

- Subrack with side panel type H ("heavy"), 19" bracket is firmly connected to side panel (tox-cold welded)
- Rear horizontal rail for backplane mounting with insulation strip
- Tested to German Railway Standards BN 411002, BN 411003
- Versions with/without front handles

NEW

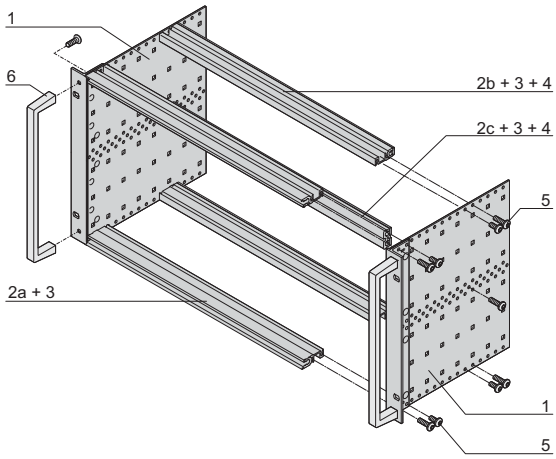

06111057

6 U

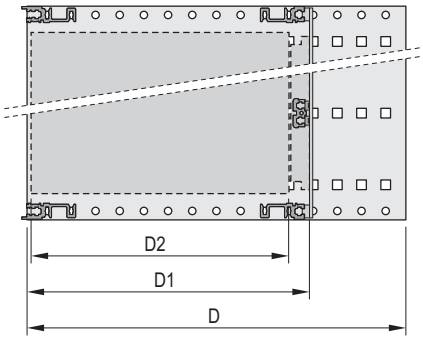

06108052

D=overall depth, D1=insertion depth,
D2=board depth = D1 - 15 mm

04400001

Rear horizontal rail for backplane mounting with insulation strip

ServicePLUS see page 6.84

Delivery comprises (Kit)

Item	Qty 3 U	Qty 6 U	Description
1	2	2	Side panel type H, Al, 2 mm, passivated, with 19" support bracket (tox-cold welded) for textile EMC gasket
2a	2	2	Front horizontal rail (H-KD)
2b	2	2	Rear horizontal rail (H-ST)
2c	-	1	Rear horizontal rail centre (H-ST)
3	4	6	Threaded inserts, front and rear (pre-fitted)
4	2	4	Insulation strip (pre-fitted)
5	1	1	Fixing material kit, user manual
6	2	2	Front handle (on version with front handle only)

Order Information

Height U	Width HP	Depth D mm	Depth D1 mm	Part no. with front handle	Part no. without front handle
3	84	175	175	**24567-161**	**24563-161**
3	84	235	175/235	**24567-162**	**24563-162**
3	84	295	175/235/295	**24567-163**	**24563-163**
3	84	355	175/235/295/355	**24567-164**	**24563-164**
6	84	175	175	**24567-461**	**24563-461**
6	84	235	175/235	**24567-462**	**24563-462**
6	84	295	175/235/295	**24567-463**	**24563-463**
6	84	355	175/235/295/355	**24567-464**	**24563-464**

Accessories

19" assembly kit (screw, washer, nut) (8 × screws, 8 × plastic washers, 8 × cage nuts)	**21100-435**

Guide rails (standard), ESD clips

Depth D2 mm	Qty/PU pieces	Part no.
160	10	**24560-351**
220	10	**24560-353**
280	10	**24560-379**
340	10	**24560-380**
ESD clip for guide rails PU 50 pieces		**24560-255**
Torx panhead screw , for extra bolting of the guide rails, 2.5 × 9.3, zinc-plated, PU 100 pieces		**24560-141**

Note

- Perforated rails, cover plates and assembly kit from page 6.34
- Textile EMC gaskets see page 6.21
- Further accessories from page 6.17
- ServicePLUS configuration from page 6.84

Subracks – europac PRO for railway applications

Kit, shielded, "heavy", for backplane mounting

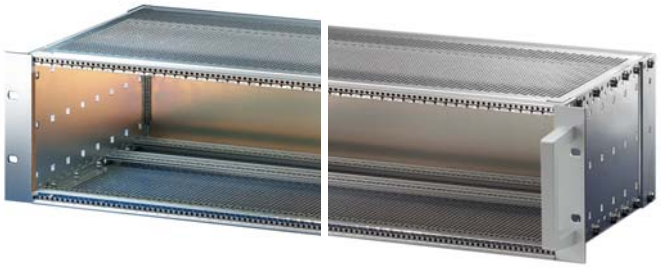

06102008 06111001

Without front handle With front handle

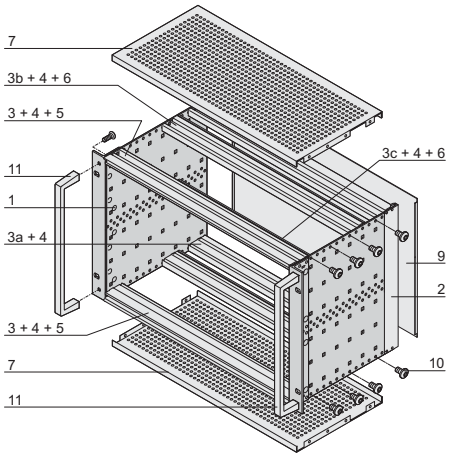

6 U 06111058

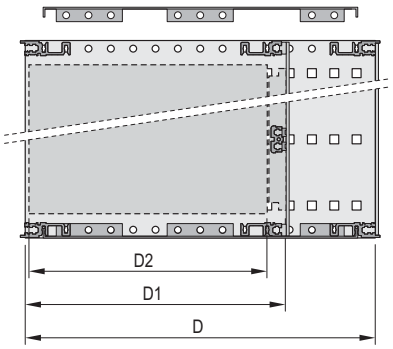

06108060

D = overall depth, D1 = insertion depth,
D2 = board depth = D1 - 15 mm

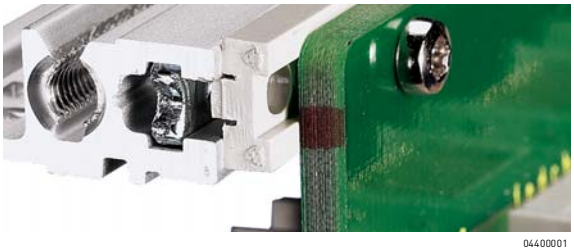

04400001

Rear horizontal rail for backplane mounting with insulation strip

ServicePLUS see page 6.84

- Subrack with side panel type H ("heavy"), 19" bracket is firmly connected to side panel (tox-cold welded)
- Horizontal rail rear for backplane mounting with insulating strip
- Shielding typically 40 dB at 1 GHz, 30 dB at 2 GHz (in accordance with VG 95373, part 15 or IEC 61587, part 3), under the condition that the front is closed with shielded front panels
- Tested to German Railway Standards BN 411002, BN 411003
- Versions with/without front handles

NEW

Delivery comprises (Kit)

Item	Qty 3 U	Qty 6 U	Description
1	2	2	Side panel type H, Al, 2 mm, passivated, with 19" support bracket (tox-cold welded); for textile EMC gasket
2	2	2	Rear corner profile for textile EMC gasket
3	2	2	Front horizontal rail (H-KD)
3 a	2	2	Rear horizontal rail (H-KD)
3 b	2	2	Rear horizontal rail (H-ST)
3 c	-	1	Rear horizontal rail centre (H-ST)
4	6	8	Threaded insert (pre-fitted)
5	2	2	Perforated strip (pre-mounted)
6	2	4	Insulation strip (pre-fitted)
7	2	2	EMC cover plate
8	1	1	EMC gasketing material (pre-fitted)
9	1	1	EMC rear panel
10	1	1	Fixing material kit, user manual
11	2	2	Front handle (on version with front handle only)

Order Information

Height U	Width HP	Depth D mm	Depth D1 mm	Part no. with front handle	Part no. without front handle
3	84	235	175/235	**24567-172**	**24563-172**
3	84	295	175/235/295	**24567-173**	**24563-173**
3	84	355	175/235/295	**24567-174**	**24563-174**
6	84	235	175/235	**24567-472**	**24563-472**
6	84	295	175/235/295	**24567-473**	**24563-473**
6	84	355	175/235/295	**24567-474**	**24563-474**

Accessories

19" assembly kit (screw, washer, nut) (8 × screws, 8 × plastic washers, 8 × cage nuts)	**21100-435**

Guide rails (standard), ESD clips

Depth D2 mm	Qty/PU pieces	Part no.
160	10	**24560-351**
220	10	**24560-353**
280	10	**24560-379**

ESD clip for guide rails PU 50 pieces	**24560-255**
Torx panhead screw , for extra bolting of the guide rails, 2.5 × 9.3, zinc-plated, PU 100 pieces	**24560-141**

- Perforated rail for connectors see page 6.34
- Further accessories from page 6.17
- ServicePLUS configuration from page 6.84

Subracks – europac PRO for railway applications

Kit, EN 50155, unshielded

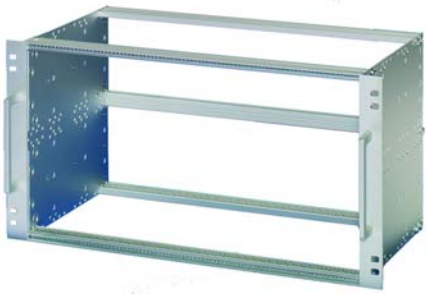

06104005

- Subrack in robust "heavy" version,
  19" bracket is firmly connected to side panel (tox-cold welded)
- For mobile railway applications
- Tested to EN 50155
- 3 U and 6 U, 84 HP, 235 mm deep, for 220 mm board depth

Delivery comprises (kit)

Item	Qty		Description
	3 U	6 U	
1	2	2	Side panel type H with 19" support bracket (tox-cold welded); prepared for EMC textile gasket
2	2	2	Front horizontal rail (H-KD)
2 a	2	2	Rear horizontal rail (H-VT)
2 b	-	1	Rear centre horizontal rail (VT)
3	4	6	Threaded inserts
4	2	2	Handles
5	1	1	Assembly kit with self-locking screws
6	1	1	User manual

3 U

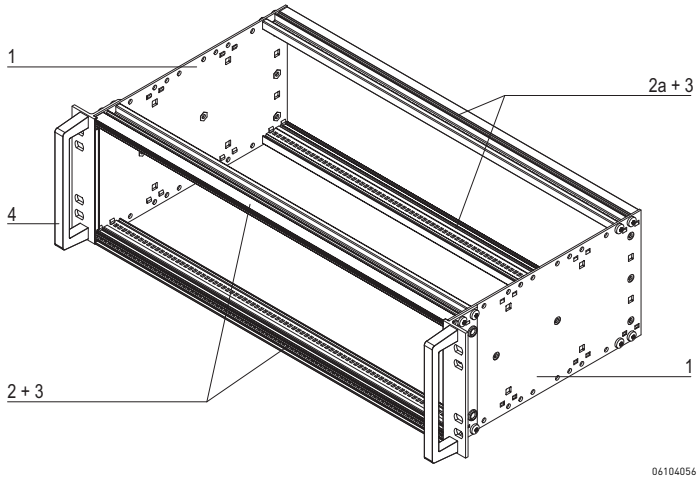

06104056

6 U

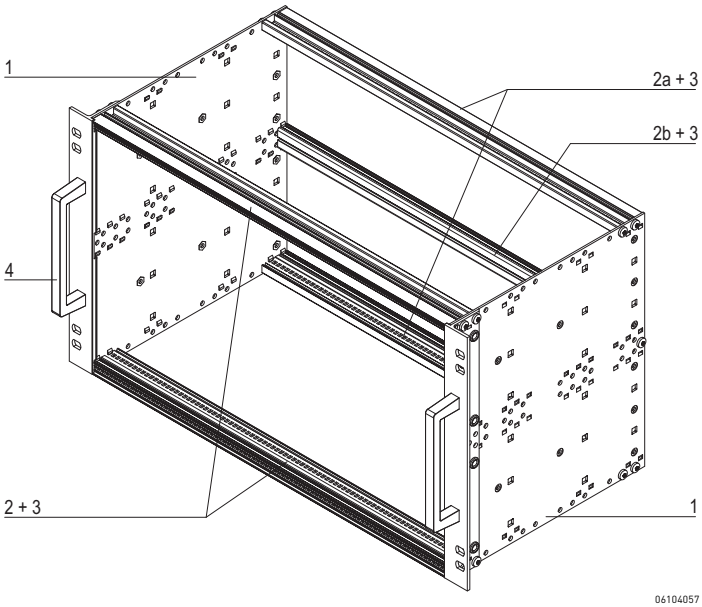

06104057

Order Information

Height	Width	Depth	Part no.
U	HP	mm	
3	84	235	**21500-077**
6	84	235	21500-078
Accessories			
Guide rail, standard, 220 mm deep PBT, UL 94 V-0, red, groove width 2 mm, PU 10 pieces, see page 6.36			**24560-353**
Panhead screw with Torx M2.5 x 9.3, St, zinc-plated, self-locking, PU 100 pieces			**21500-039**
ESD clip for guide rails PU 50 pieces			**24560-255**
Cover plate for screw-fixing onto side panel width 84 HP, depth 220 mm, PU 1 kit			**21500-037**
19" dual fixing materials kit suitable for a subrack with double fixing holes (bolts, washers and nuts), PU 1 kit			**24566-109**

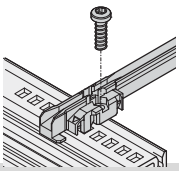

Note

- Test reports online
- ServicePLUS configuration see from page 6.84
- Further accessories see from page 6.17

ServicePLUS see page 6.84

Subracks – *europac PRO* for railway applications

Kit, EN 50155, shielded

06104006

- Subrack in robust "heavy" version,
  19" bracket is firmly connected to side panel (tox-cold welded)
- For mobile railway applications
- Tested to EN 50155
- 3 U and 6 U, 84 HP, 235 mm deep, for 220 mm board depth

3 U

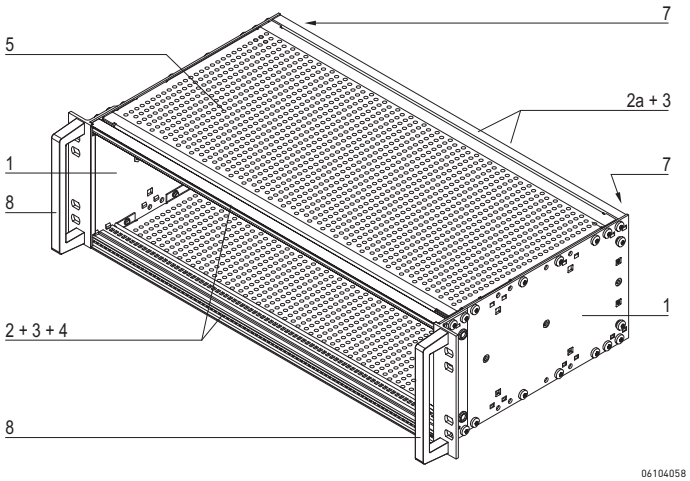

06104058

6 U

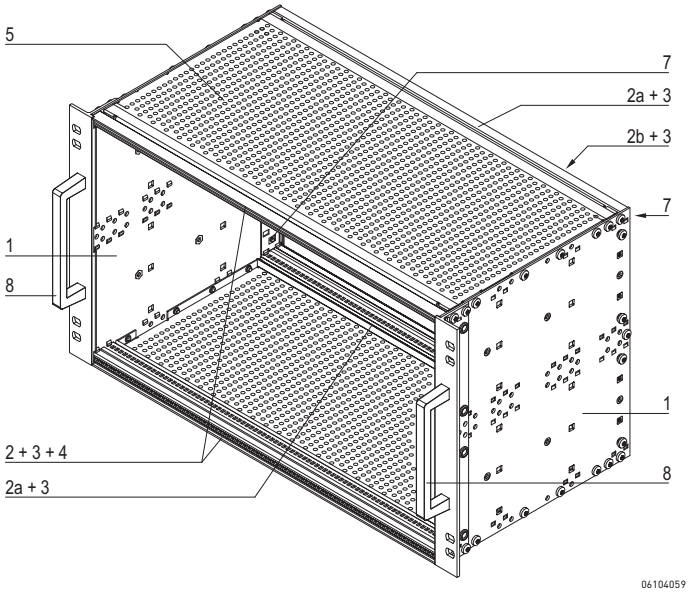

06104059

Delivery comprises (kit)

Item	Qty		Description
	3 U	6 U	
1	2	2	Side panel type H with 19" support bracket (tox-cold welded); for textile EMC gasket
2	2	2	Front horizontal rail (H-KD)
2 a	2	2	Rear horizontal rail (H-VT)
2 b	-	1	Rear centre horizontal rail (VT)
3	4	6	Threaded inserts
4	2	2	Perforated strip
5	2	2	EMC cover plate 235 T
6	1	1	EMC gasketing kit
7	1	2	Backplane kit – EMC shielding material
8	2	2	Handles
9	1	1	Assembly kit with self-locking screws
10	1	1	User manual

Order Information

Height	Width	Depth	Part no.
U	HP	mm	
3	84	235	21500-079
6	84	235	**21500-080**
Accessories			
Guide rail, standard, 220 mm deep PBT, UL 94 V-0, red, groove width 2 mm, PU 10 pieces, see page 6.36	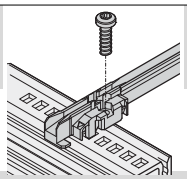		**24560-353**
Panhead screw with Torx M2.5 x 9.3, St, zinc-plated, self-locking, PU 100 pieces			**21500-039**
ESD clip for guide rails PU 50 pieces			**24560-255**
19" dual fixing materials kit suitable for a subrack with double fixing holes (bolts, washers and nuts), PU 1 kit			**24566-109**

Note

- Test reports online
- ServicePLUS configuration see from page 6.84
- Further accessories see from page 6.17

ServicePLUS see page 6.84

Subracks – europac PRO for railway applications

Kit, EN 50155, shielded, for CompactPCI applications

06104007

- Subrack in robust "heavy" version, 19" bracket is firmly connected to side panel (tox-cold welded)
- For mobile railway applications
- Tested to EN 50155
- 3 U and 6 U, 84 HP, 235 mm deep, for 160 mm board depth
- Subrack in accordance with IEEE 1101.10

Delivery comprises (kit)

Item	Qty 3 U	Qty 6 U	Description
1	2	2	Side panel type H with 19" support bracket (tox-cold welded); for textile EMC gasket
2	1	-	Front horizontal rail (H-KD)
2 a	2	2	Rear horizontal rail (H-VT)
2 b	-	1	Rear centre horizontal rail (VT)
2 c	1	2	Front horizontal rail (H-LD)
3	4	6	Threaded inserts
4	2	2	Perforated strip
5	2	2	EMC cover plate, 175 T
6	1	1	EMC gasketing kit
7	1	2	Backplane kit – EMC shielding material
8	2	2	Handles
9	1	1	Assembly kit with self-locking screws
10	1	1	User manual

3 U

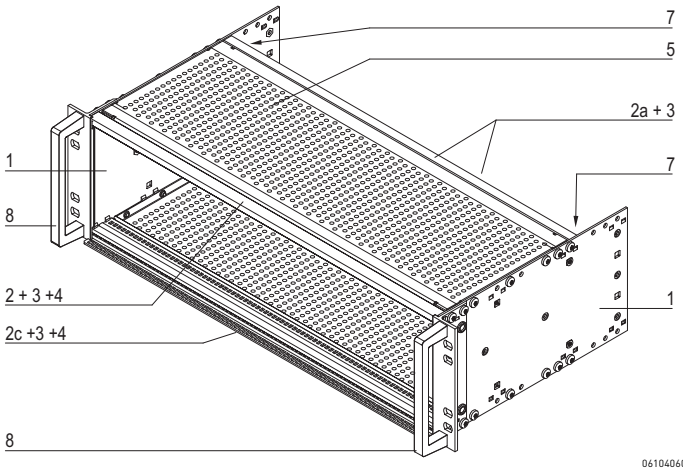

06104060

6 U

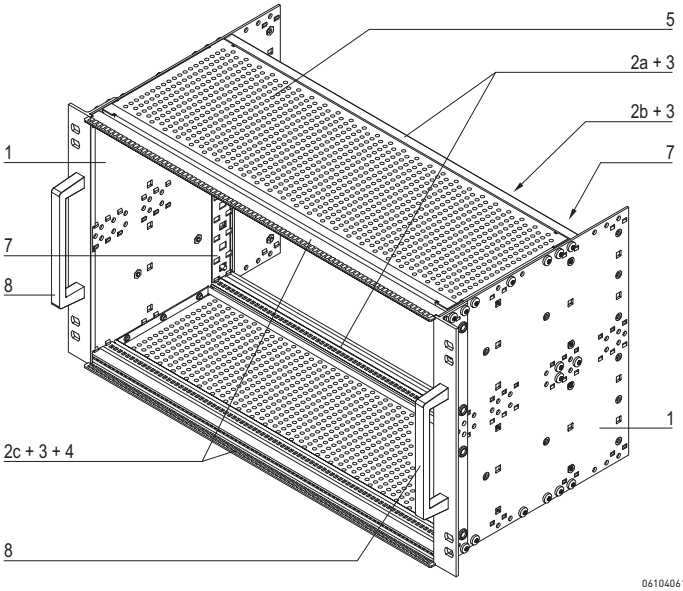

06104061

Order Information

Height U	Width HP	Depth mm	Part no.
3	84	235	21500-081
6	84	235	21500-082
Accessories			
19" dual fixing materials kit suitable for a subrack with double fixing holes (bolts, washers and nuts), PU 1 kit			**24566-109**

Note

- Please order guide rails and ESD clips separately, see page 6.81
- Test reports online
- ServicePLUS configuration see from page 6.84
- Further accessories see from page 6.17

ServicePLUS see page 6.84

Subracks – europacPRO for railway applications

Kit, SNCF, unshielded

06104002

- Subrack, robust "heavy" version, 19" bracket is firmly connected to side panel (tox-cold welded)
- For mobile railway applications
- SNCF listed, europacPRO-fer, tested to NF F 61-005 and NF F 60-002
- 3 U and 6 U, 9 HP and 21 HP, 320 mm deep, for 220 mm board depth

3 U

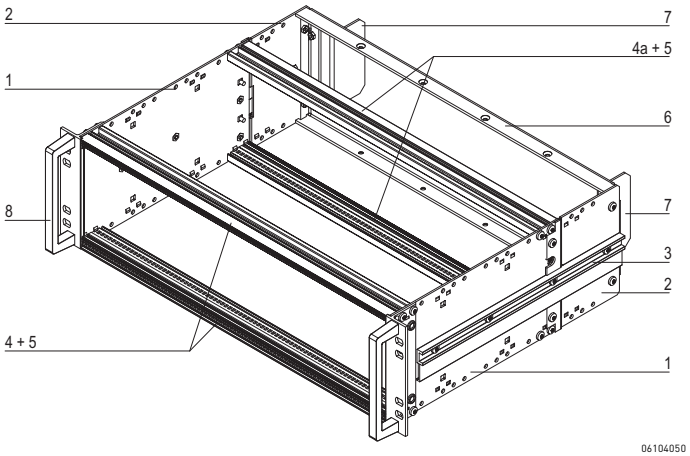

06104050

6 U

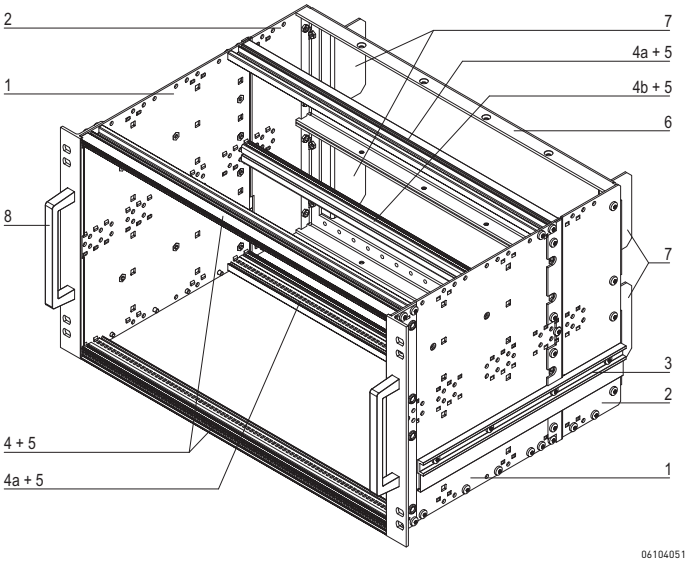

06104051

Coding peg

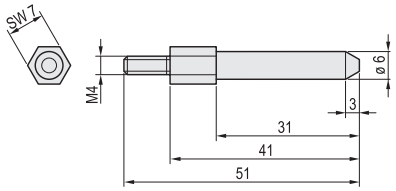

06104062

Delivery comprises (kit)

Item	Qty 3 U	Qty 6 U	Description
1	2	2	Side panel type H with 19" support bracket (tox-cold welded); prepared for textile EMC gasket
2	2	2	Side panel extension
3	2	2	Ducting external
4	2	2	Front horizontal rail (H-KD)
4 a	2	2	Rear horizontal rail (H-VT)
4 b	-	1	Rear centre horizontal rail (VT)
5	4	6	Threaded inserts
6	1	2	Rear frame 3 U, 21 T
7	2	4	Protective bracket SNCF
8	2	2	Handle
9	1	1	Assembly kit with self-locking screws
10	1	1	User manual

Order Information

Width mm	Height U	Depth mm	Part no.
36 HP (9 T)	3	320	21500-067
36 HP (9 T)	6	320	21500-070
84 HP (21 T)	3	320	21500-029
84 HP (21 T)	6	320	21500-027
Accessories			
Guide rail, standard, 220 mm deep PBT, UL 94 V-0, red, groove width 2 mm, PU 10 pieces, see page 6.36	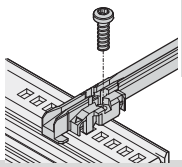		**24560-353**
Panhead screw with Torx M2.5 x 9.3, St, zinc-plated, self-locking, PU 100 pieces			**21500-039**
ESD clip for guide rails PU 50 pieces			**24560-255**
Coding peg for rear frame, St, white zinc-plated, 1 piece			**60895-018**
19" dual fixing materials kit suitable for a subrack with double fixing holes (bolts, washers and nuts), PU 1 kit			**24566-109**

Note

- fer = ferroviaire = French Railways, 1 T = 4 HP = 20.32 mm
- Receptacle/mounting frame for subracks, stainless steel, 9 T or 21 T on request
- Test reports online
- Cover plates for bolting on to side panel see page 6.82
- ServicePLUS configuration see from page 6.84
- Further accessories see from page 6.17

ServicePLUS see page 6.84

Subracks – europacPRO for railway applications

Kit, SNCF, shielded

06104003

- Subrack, robust "heavy" version, 19" bracket is firmly fixed to side panel (tox-cold welded)
- For mobile railway applications
- SNCF listed, europacPRO-fer, tested to NF F 61-005 and NF F 60-002
- 3 U and 6 U, 9 T and 21 T, 320 mm deep, for 220 mm board depth

3 U

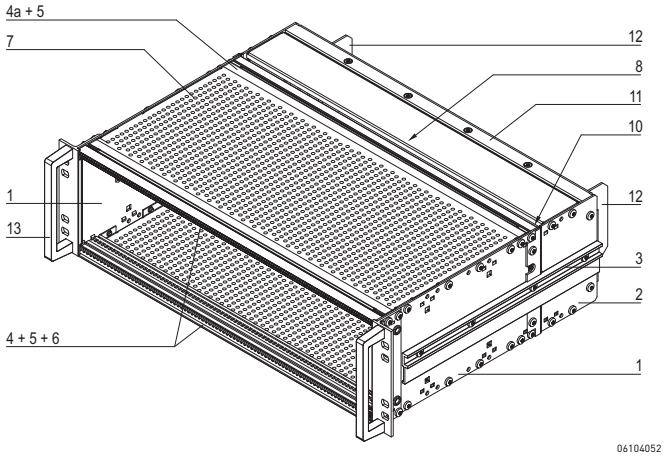

06104052

6 U

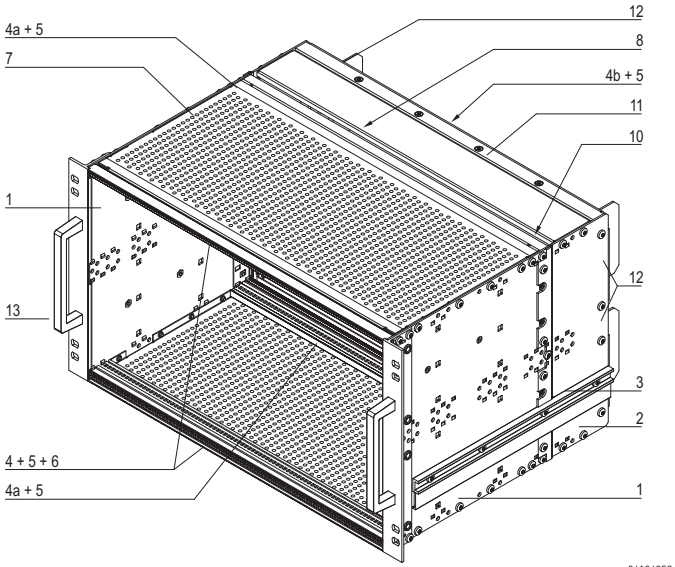

06104053

Coding peg

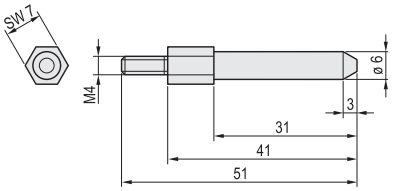

06104062

ServicePLUS see page 6.84

Delivery comprises (kit)

Item	Qty 3 U	Qty 6 U	Description
1	2	2	Side panel type H with 19" support bracket (tox-cold welded); for textile EMC gasket
2	2	2	Side panel extension
3	2	2	Ducting external
4	2	2	Front horizontal rail (H-KD)
4 a	2	2	Rear horizontal rail (H-VT)
4 b	-	1	Rear centre horizontal rail (VT)
5	4	6	Threaded inserts
6	2	2	Perforated strip
7	2	2	EMC cover plate 235 T
8	2	2	Rear cover plate, 55 T
9	1	1	EMC gasketing kit
10	1	2	Backplane kit – EMC shielding material
11	1	2	Rear frame, 3 U, 21 T
12	2	4	Protective bracket SNCF
13	2	2	Handles
14	1	1	Assembly kit with self-locking screws
15	1	1	User manual

Order Information

Width	Height U	Depth mm	Part no.
36 HP (9 T)	3	320	21500-068
36 HP (9 T)	6	320	21500-071
84 HP (21 T)	3	320	21500-030
84 HP (21 T)	6	320	21500-028
Accessories			
Guide rail, standard, 220 mm deep PBT, UL 94 V-0, red, groove width 2 mm, PU 10 pieces, see page 6.36	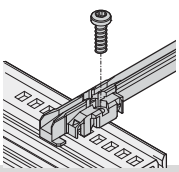		**24560-353**
Panhead screw with Torx M2.5 x 9.3, St, zinc-plated, self-locking, PU 100 pieces			**21500-039**
ESD clip for guide rails PU 50 pieces			**24560-255**
Coding peg for rear frame, St, white zinc-plated, 1 piece			**60895-018**
19" dual fixing materials kit suitable for a subrack with double fixing holes (bolts, washers and nuts), PU 1 kit			**24566-109**

Note

- fer = ferroviaire = French Railways, 1 T = 4 HP = 20.32 mm
- Receptacle/mounting frame for subracks, stainless steel, 9 T or 21 T on request
- Test reports online
- ServicePLUS configuration see from page 6.84
- Further accessories see from page 6.17

Subracks – *europac**PRO*** for railway applications

Kit, SNCF, shielded, for CompactPCI applications

06104004

- Subrack, robust "heavy" version, 19" bracket is firmly fixed to side panel (tox-cold welded)
- For mobile railway applications
- SNCF listed, europacPRO-fer, tested to NF F 61-005 and NF F 60-002
- 3 U and 6 U, 9 HP and 21 HP, 320 mm deep, for 160 mm board depth
- CompactPCI subrack conforming to 1101.10

3 U

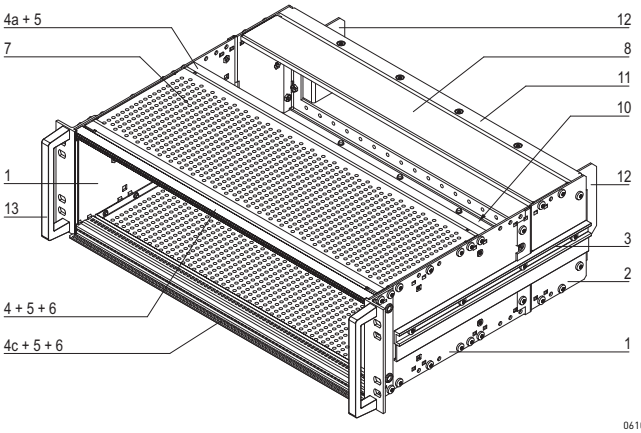

06104054

6 U

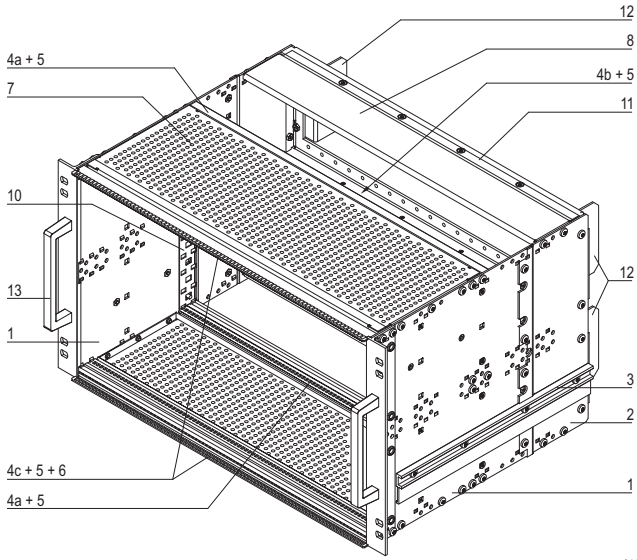

06104055

Coding peg

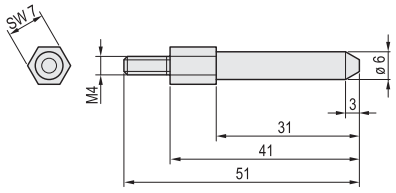

06104062

ServicePLUS see page 6.84

Delivery comprises (kit)

Item	Qty 3 U	Qty 6 U	Description
1	2	2	Side panel type H with 19" support bracket (tox-cold welded); for textile EMC gasket
2	2	2	Side panel extension
3	2	2	Ducting external
4	1	-	Front horizontal rail (H-KD)
4 a	2	2	Rear horizontal rail (H-VT)
4 b	-	1	Rear centre horizontal rail (VT)
4 c	1	2	Front horizontal rail (H-LD)
5	4	6	Threaded inserts
6	2	2	Perforated strip
7	2	2	EMC cover plate, 175 T
8	2	2	Rear cover plate, 55 T
9	1	1	EMC gasketing kit
10	1	2	Backplane kit – EMC shielding material
11	1	2	Rear frame, 3 U, 21 T
12	2	4	Protective bracket SNCF
13	2	2	Handles
14	1	1	Assembly kit with self-locking screws
15	1	1	User manual

Order Information

Width	Height U	Depth mm	Part no.
36 HP (9 T)	3	320	21500-069
36 HP (9 T)	6	320	21500-072
84 HP (21 T)	3	320	21500-047
84 HP (21 T)	6	320	21500-046
Accessories			
Coding peg for rear frame, St, white zinc-plated, 1 piece			**60895-018**
19" dual fixing materials kit suitable for a subrack with double fixing holes (bolts, washers and nuts), PU 1 kit			**24566-109**

Note

- Please order guide rails and ESD clips separately, see page 6.81
- fer = ferroviaire = French Railways, 1 T = 4 HP = 20.32 mm
- Receptacle/mounting frame for subracks, stainless steel, 9 T or 21 T on request
- Test reports online
- ServicePLUS configuration see from page 6.84
- Further accessories see from page 6.17

Subracks – europac PRO for railway applications

Guide rails

- Material PBT, UL 94 V-0, red, groove width 2 mm, for 1.6 mm board thickness

Order Information

Description	Depth mm	Qty/PU	Part no.
Guide rails, accessories, 160 mm deep	160	10	**24560-351**
Guide rails, standard, 220 mm deep	220	10	**24560-353**
ESD clip for guide rails PU 50 pieces			**24560-255**

Guide rails with coding for CompactPCI and VME64x

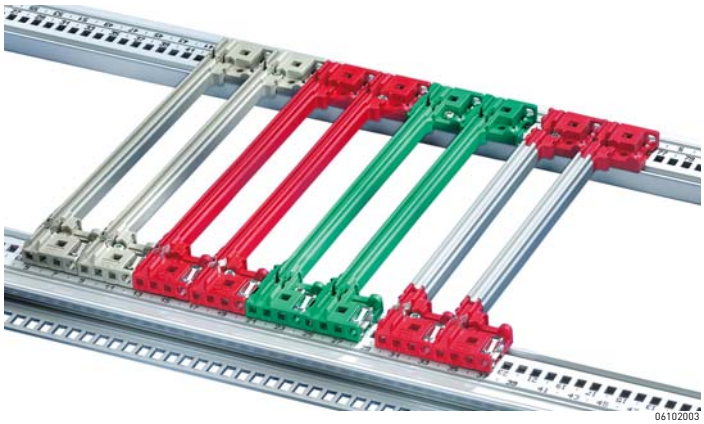

- The guide rails conform to IEC 60297-3-100 and IEEE 1101.10/11, are 4 HP wide and can be fitted with keying/coding pegs
- Material PBT UL 94 V-0, groove width 2 mm, for board thickness 1.6 mm
- Colour:
  - red (CPU board)
  - grey (periphery board)
  - green (CompactPCI power supply unit, 0.1" offset)

Order Information

Description	Depth mm	Qty/PU	Part no.
Guide rails with coding, red	160	10	**24560-356**
Guide rails with coding, grey	160	10	**24560-358**
Guide rails with coding, green, offset	160	10	**24560-359**
Panhead screw with Torx M2.5 x 9.3, St, zinc-plated, self-locking, PU 100 pieces	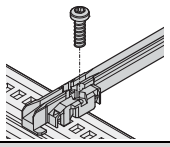		**21500-039**
ESD clip for guide rails PU 50 pieces			**24560-255**
ESD clip for alignment pin of CPCI/VME64x handle PU 50 pieces			**24560-256**
Coding peg PC, UL 94 V-0, RAL 7035, PU 100 pieces			**20817-501**

Guide rails on horizontal rail type H

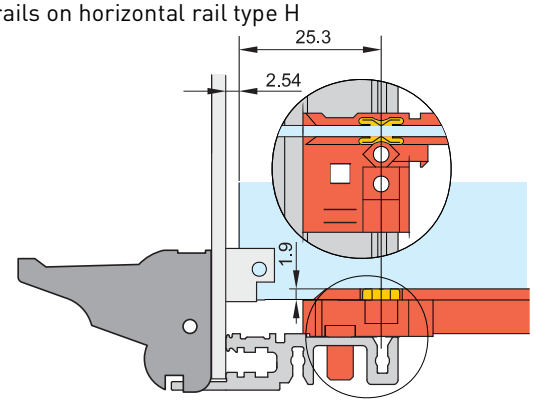

ESD clip for alignment pin

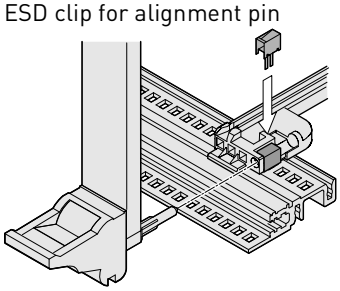

- More guide rails see page 6.36
- For inserter/extractor handle type IEL/IET for CompactPCI or VME64x applications see Subracks/Plug-in units section, page 7.18

Subracks – *europac PRO* for railway applications

Cover plate for screw-fixing onto side panel

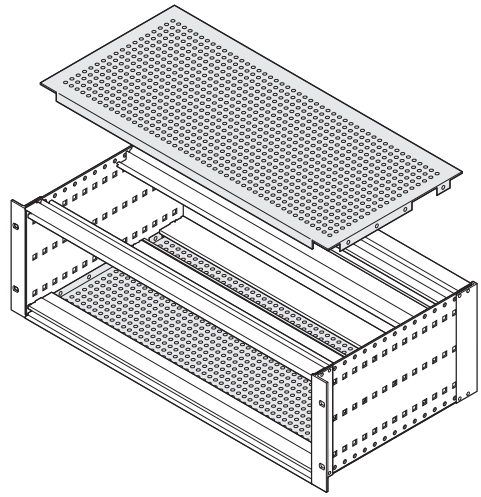

06102084

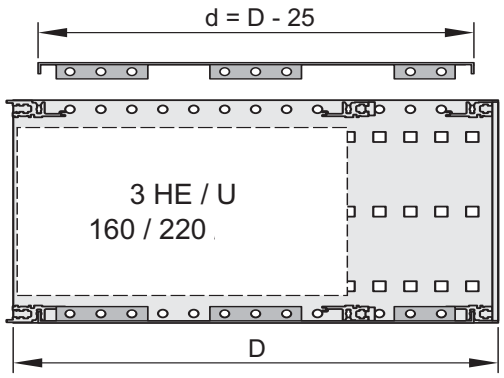

06102082

Side view for 175 mm and 235 mm depths

- Suitable for use with all horizontal rails
- Cover plate for mounting of 160 mm, 220 mm or 280 mm deep PCBs
- Lateral notch to mount the horizontal rails in depths of 160 mm or 220 mm
- Shielding by optional EMC stainless steel contact strips between cover plate and horizontal rail

Delivery comprises

Item	Qty	Description
1	2	Cover plate, Al, 1.0 mm, clear chromated, hole diameter 4.0 mm, (no perforation at 55 mm depth)
2	16/32	Torx M4 x 6 pentaform bolts, St, zinc-plated

Order Information

Width HP	Depth D mm	Application	Part no.
84	55	–	**21500-038**
84	175	160	**21500-048**
84	235	160, 220	**21500-037**
36	55	–	**21500-123**
36	175	160	**21500-124**
36	220	160, 220	**21500-122**

Note

- 4 stainless steel EMC gaskets are necessary per subrack, see page 6.82

EMC gasket (stainless steel) between cover plate and horizontal rail

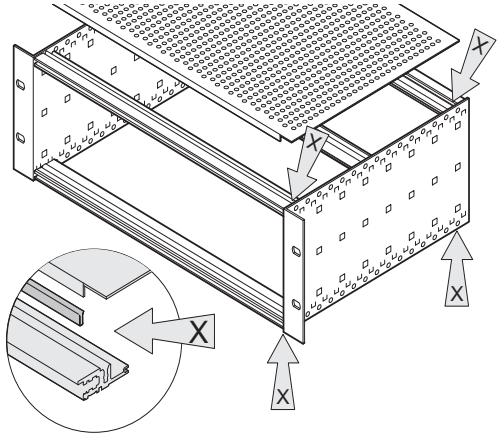

06102052

Assembly tool

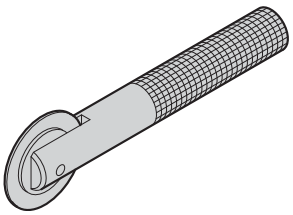

aza45938

- Stainless steel gasket is clipped into horizontal rail and forms the contact cover plate
- Fits all horizontal rails

Order Information

Width HP	Length mm	Qty/PU pieces	Part no.
42	182.4	10	**24560-241**
63	284.0	10	**24560-243**
84	395.7	10	**24560-245**
84	395.7	100	**24560-246**
Assembly tool For mounting of EMC sealing, St, stainless, in horizontal rails, 1 piece			**24560-271**

Note

- When a rear hood is used, the stainless steel EMC gasket ensures the conductive connection between horizontal rail and rear hood

Subracks – europacPRO for railway applications

Coding peg for rear frame (NFF standard)

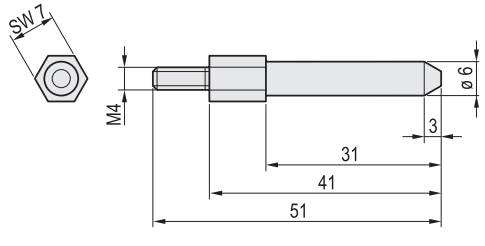

Order Information

Description	Qty/PU	Part no.
Coding peg, St, white zinc-plated	1	**60895-018**

Rear hood for 3 U and 6 U subracks (for stainless steel EMC gasket)

Order Information

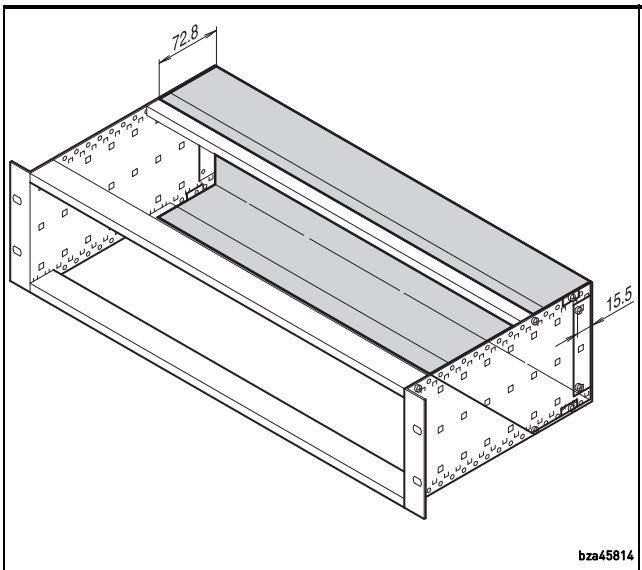

Rear hood

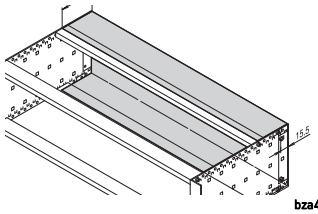

Al, 1 mm, clear passivated;
60 mm additional side panel depth required (board depth + 60 mm);
for shielding please order EMC gasket for horizontal rail separately;
cannot be used simultaneously with rear corner profile

Stainless steel EMC gasket, between cover plate and horizontal rail

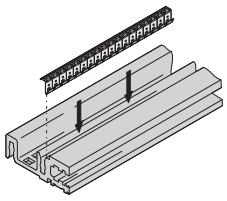

stainless steel EMC gasket,
clips into the horizontal rail and forms the contact with the cover plate;
suitable for all horizontal rails

Height U	Width HP	1 piece	PU 10 pieces
3	42	**34561-750**	**24560-241**
3	84	**34561-752**	**24560-245**
6	63	**34561-763**	**24560-243**
6	84	**34561-764**	**24560-245**
Torx panhead screw, M4 × 6, St, zinc-plated, PU 100 pieces		**24560-135**	–
Assembly tool, For EMC gasket, stainless steel (horizontal rails), 1 piece 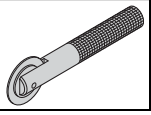		–	**24560-271**

Note

- Other dimensions of rear hood available on request

Subracks – for railway applications ServicePLUS

configuration

Components can be varied and combined freely

Simple. Fast. For the product you want.

- Configuration tables from page 6.17
- Online configuration: www.schroff.co.uk/configuration

assembly

Fitting of all mechanical, electrical and electronic components by our specialists

Assembled by professionals. Double benefit!

- Professional and reliable from quantity 1
- Ready for despatch within 5 working days

modification

Custom drillings, cut-outs and special colours for off-the-shelf products

Small changes. Large impact.

- Custom modifications from quantity 1
- Ready for despatch within 10 working days

solution

Integration and custom developments

Simple. Fast. From one source.

- Special sizes (depth and width)
- Individual heat dissipation concepts
- Ready for despatch within 10 working days

express

Delivery time to customer's request

When fast has to be faster.

- Express logistics

academy

Knowledge transfer and partnership

Knowledge. Sharing. Partnerships.

- Seminars, CAD drawings, test reports, user reports

Subracks – for railway applications ServicePLUS

Application examples

06108006

Application: Subrack receptacle/mounting frame

06108020

Application: Automatic train control system

41108002

Application: Signalling control systems

41108001

Application: Mobile telephony system

Csee_DSCN2296

Application: Control system

01004031

Application: Train control system

Content

Subracks – europac PRO for industrial applications

Cabinets 1
Wall mounted cases 2
Accessories for cabinets and wall mounted cases . 3
Climate control . 4
Electronics cases 5
Subracks/ 19" chassis 6
Front panels, plug-in units . . . 7
Systems 8
Power supply units 9
Backplanes . . . 10
Connectors, front panel component system 11
Appendix 12

06112008

We package your euroboards - even for applications in harsh industrial environments

- A wide range in different dimensions, with finishes for the most diverse applications
- In accordance with the IEC 60297-3-101 and IEEE 1101.1 standards
- Tested to IEC 61587, VG 95373 T15, EN 50155, BN 411002, NF F 67-012, NF F 60-002
- Delivered as a kit in space-saving package or individually assembled and fitted to your specifications

Applications

06112009

Subracks for mounting on mounting plate incl. connection field

06112010

Subracks with special adaptation

Subracks – europacPRO for industrial applications

Overview 6.86

Subrack for industrial applications

- Accommodates electronic boards in industrial applications
- Mounting frame for power distribution modules (connectors, RCD switches, ...)
- Bracket for panel mounting

Introduction 6.4

06112002

Subrack for mounting on a mounting plate

- Height 3 U, width 28 HP, depth 205 mm
- For mounting on mounting plate
- For direct mounting of backplanes or to fit DIN plugs, DIN 41612/EN 60603-2

Subrack for wall mounting .. 6.88

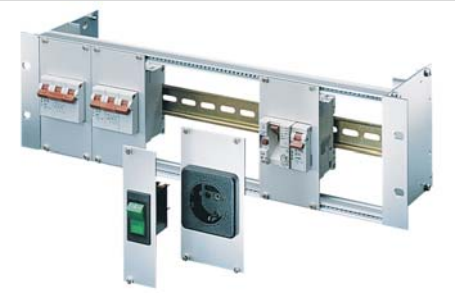

01494031

Module support

- Height 3 U, width 84 HP, depth 115 mm
- Power distribution modules to mount on lipped horizontal rail in accordance with DIN 43880

Module support 6.89

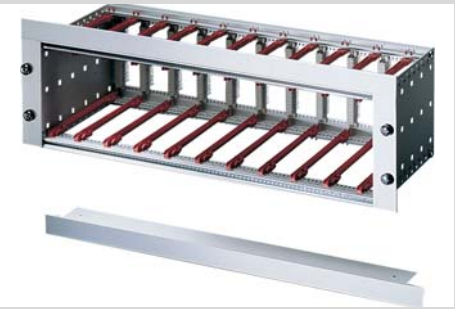

06197021

Bracket for mounting subracks in a panel

- Bracket widths 42 and 84 HP

Bracket for panel mounting 6.90

Accessories

- Accessories (e.g. lipped rail adaptor, horizontal rails)

Accessories 6.91

30407004

ServicePLUS from page 6.18 / 6.84

e.g. modification (cut-outs)
e.g. downloads (CAD drawings, user manuals, test reports)
e.g. custom solutions (special depths, electromagnetically shielded applications)

www.schroff.biz/ServicePLUS

ServicePLUS ... 6.18
Application examples 6.85
europacPRO ... 6.6
Subracks for mobile railway applications 6.70
europacPRO for rugged applications 6.92

europacPRO subrack, unshielded

06112001

Illustration shows subrack without rear hood

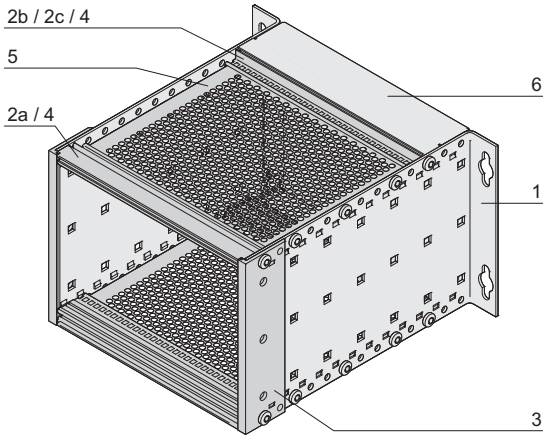

06112050

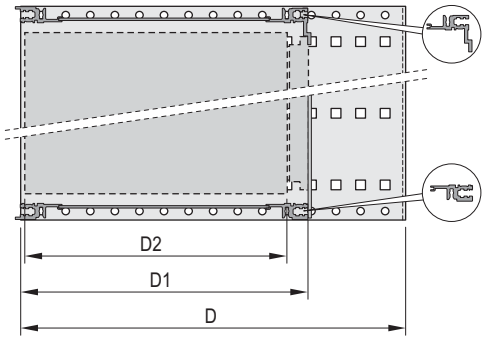

06112051

Connector/backplane mounting;
D=overall depth, D1=insertion depth,
D2=board depth = D1 - 15 mm

04400003

Horizontal rail to rear for connector mounting

04400002

Horizontal rail to rear for direct backplane mounting

- Subrack to mount on the wall or on mounting plate
- For mounting of euroboards to IEC 60297-3-101 in size 3 U, 160 mm deep
- Versions
  - For connector mounting (DIN 41612, EN 60602-3), with/without rear panel
  - For backplane mounting, with/without rear hood

NEW

Delivery comprises

Item	Qty	Description
1	2	Side panel, 3 U, Al, 2 mm with integrated wall-mounting bracket
2a	2	Front horizontal rail (L-KD)
2b	2	Rear horizontal rail (L-RC) for backplane mounting
2c	2	Rear horizontal rail (L-MZ) for connector mounting
3	2	Rear angle
4	2/4	Threaded insert, St, zinc-plated
5	2	Cover plate, pushed in
6	1	Rear hood, Al, 1 mm (only for version with rear hood)
7	1	Fixing materials kit, user manual

Order Information

Description	Height U	Width HP	Depth D mm	Depth D1 mm	Part no.
With rear panel, for connector mounting	3	28	205	175	**24563-110**
Without rear panel, for connector mounting	3	28	205	175	**24563-109**
With rear panel, for direct backplane fixing	3	28	205	175	**24563-108**
Without rear panel, for direct backplane fixing	3	28	205	175	**24563-107**
Accessories					
Guide rails, accessories, 160 mm deep PBT, UL 94 V-0, red, groove width 2 mm, PU 10 pieces					**24560-351**
Front panels					**Page 7.5**
Front panel with handle					**Page 7.16**

Note

- EMC version on request

Subracks – europac PRO for industrial applications

19" module support, support rail to DIN 43880, hood

Order Information

	19" module support			
	to accommodate power distribution modules	Support rails to DIN 43880	Front panel for 19" module support	Hood
01494031	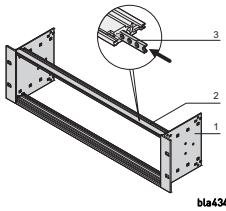 bla43467	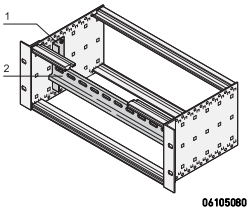 06105080	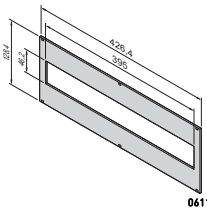 06111053	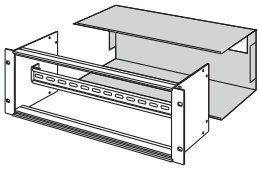 BLA43492
	3 U, 84 HP, 115.5 mm deep; 2 side panels Al, 2 mm; 2 horizontal rails with short lip (L-KD), Al extrusion, surface anodised, contact surfaces conductive; 2 threaded inserts, St, zinc-plated; GND/earthing kit; fixing material kit; Please order support rail separately	2 adaptor brackets, Al, 2 mm; support rail, St, zinc-plated, (35/7.5 mm); for width 84 HP (430.5 mm); Mounted in module support or subrack on the side panel	3 U, 84 HP, Al, 2.5 mm, front anodised, rear iridescent green chromated; GND/earth connection 6.3 mm FASTON; (cut-out 395 mm x 46.2 mm); two blanking plates, plastic, polyester, colour similar to RAL 7035; to cover unused module slots	Al, 1 mm, with brush strip; is bolted to the rear of the module support; GND/earthing kit
	PU 1 kit	PU 1 kit	1 piece	1 piece
	24563-100	**24565-100**	**24563-096**	**24564-100**

Accessories

- Power distribution modules see page 3.34

Subracks – europac PRO for industrial applications

Bracket for panel mounting

Order Information

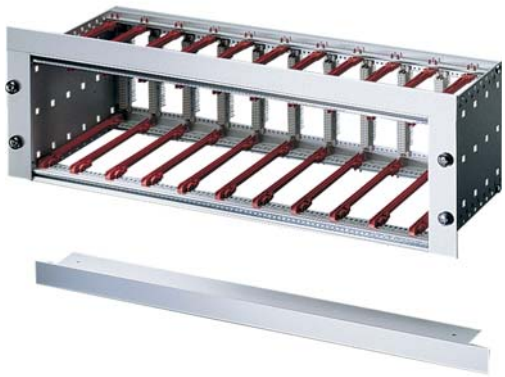

06197021

Bracket (mounting angle)

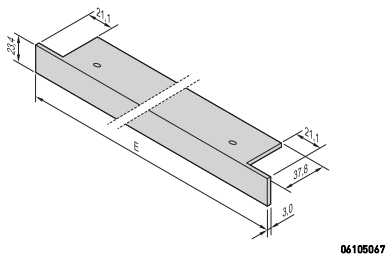

06105067

Al extrusion, anodised; serves as front visual cover of subrack at top and bottom when fitted into a panel; screwed in from the front with the horizontal rail; 2 brackets and 4 screws are required per subrack

Usable width HP	Length mm	1 piece
42	269.2	**34561-777**
84	482.6	**34561-779**
Torx panhead screw 2.5 × 9.3, zinc-plated, PU 100 pieces		**24560-141**

Note

- Further widths available on request

Assembly cut-out

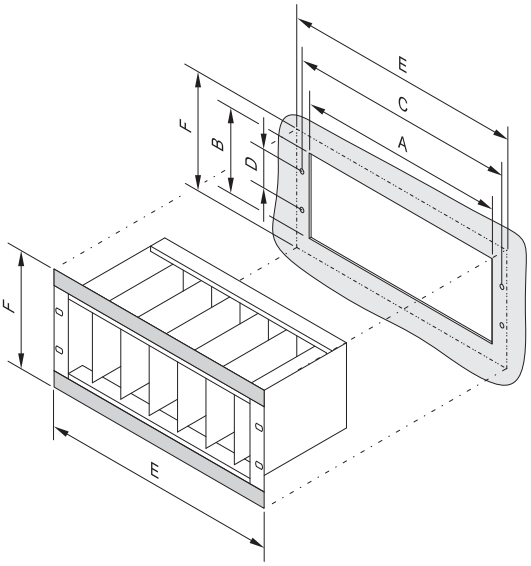

06105066

Dimensions table

U	HP	A mm	B mm	C mm	D mm	E mm	F mm
3	42	237.0	145.0	252.0	57.15	269.2	179.4
3	63	343.0	145.0	358.5	57.15	375.9	179.4
3	84	450.0	145.0	465.0	57.15	482.6	179.4
6	42	237.0	278.5	252.0	190.5	269.2	312.7
6	63	343.0	278.5	358.5	190.5	375.9	312.7
6	84	450.0	278.5	465.0	190.5	482.6	312.7

Subracks – europacPRO for industrial applications

Adaptor for horizontal rail mounting

04812021

11395007

Example: Lipped horizontal rail adaptor for 19" PSU

- For mounting e.g. small subracks, small wall mounted cases, frame type plug-in units or PSUs on a horizontal rail with lip
- Adaptor is bolted to the desired product and can then be clipped to the lipped horizontal rail (DIN 43880)

Delivery comprises

Item	Qty	Description
1	1	Adaptor, Al extrusion, length 160 mm
1	1	Assembly kit

Order Information

Description	Part no.
Adaptor for horizontal rail mounting	**11000-002**

Content

Cabinets 1
Wall mounted cases 2
Accessories for cabinets and wall mounted cases . 3
Climate control . 4
Electronics cases 5
Subracks/ 19" chassis 6
Front panels, plug-in units . . . 7
Systems 8
Power supply units 9
Backplanes . . . 10
Connectors, front panel component system 11
Appendix 12

Subracks – europac PRO rugged

06112020

06112004

"rugged" horizontal rail with 3 hole fixing for increased stability (+60 % compared to 2 hole fixing of "heavy" horizontal rail)

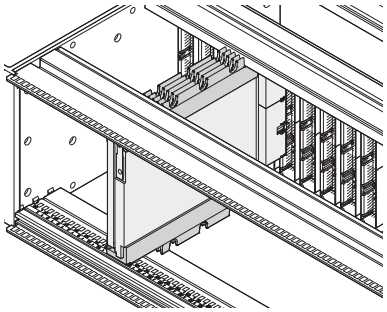

06112052

Special adaptor rails allow conducted cooled assemblies to be fitted

Y-axis_001a1

Shock and vibration resistant in all three axial directions

Standards/Approvals

- Internal and external dimensions in accordance with:
  IEC 60297-3-100, -101, - 102, -103, -104, -105, IEEE 1101.1, IEEE 1101.10/11
- Type of protection IP 20, in accordance with IEC 60529
- EMC testing to IEC 61587-3
- Shock and vibration test report;
  MIL 167, IEC 61587 DL 3,
  MIL 810 G, MIL 901

Note

- Other finishes e.g. yellow chromated on request
- Subrack with telescopic slides can be adapted for cabinet mounting on request

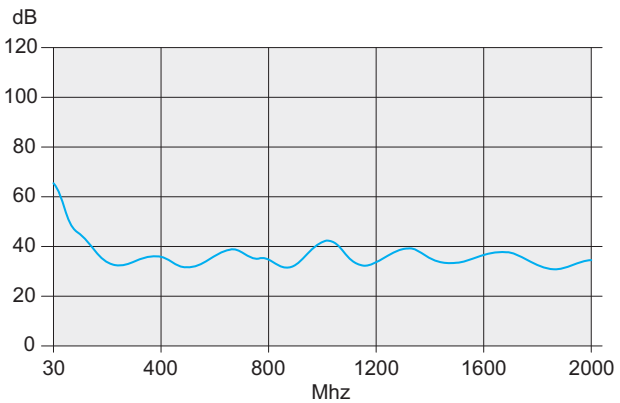

06108081

EMC curve

Subracks – europacPROrugged

Overview 6.92

19" subracks

- Shock and vibration resistant up to 25 g
- Kits or individually configured subracks
- A product and accessory platform for the most different customers' requirements and applications
- Suitable for CompactPCI and VMEbus insertion and extractor handles
- EMC shielding can easily be retrofitted
- 3D PDF or CAD 3D data available for download

Introduction 6.4

06112017

Kits

- All required parts are available under one part number, even partly assembled
- Most popular versions and dimensions available from stock
- For installed loads over 15 kg up to 60 kg
- Supplied as a space-saving flat pack

Kits 6.94

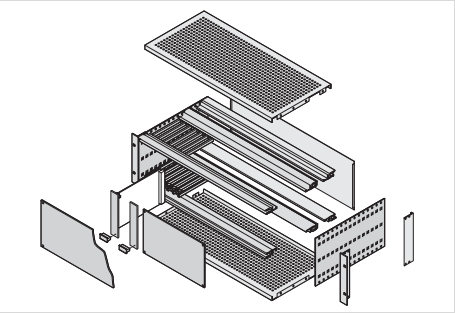

06105058

ServicePLUS individual configuration

- Single parts may individually be configured, respectively assembled on request (from quantity 1)
- Wide range of variants in heigth, width and depth
- Guide rails for different applications
- EMC shielding material to improve EMC performance
- Other accessories and assembly kits

Individual configuration ... 6.97

30407004

ServicePLUS from page 6.95

e.g. modification (cut-outs)
e.g. downloads (CAD drawings, user manuals, test reports)
e.g. custom solutions (special depths, electromagnetically shielded applications)

www.schroff.biz/ServicePLUS

ServicePLUS 6.95
Application examples 6.71

europacPRO 6.6

Subracks for mobile railway applications 6.70

europacPRO for industrial applications 6.86

Kit, rugged, shielded, for backplane mounting

06112017

Illustration shows 3 U subrack

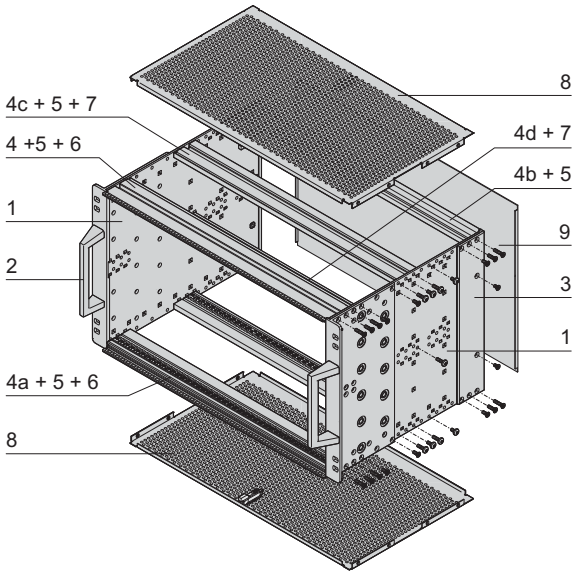

06112055

6 U

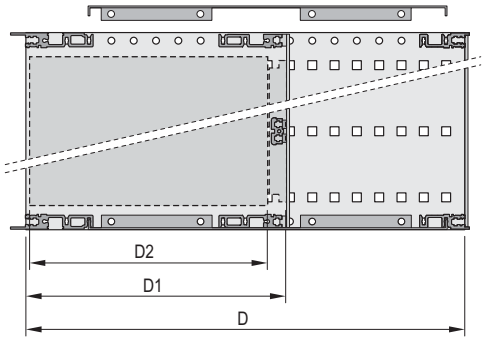

06112054

D = overall depth, D1 = insertion depth,
D2 = board depth = D1 - 15 mm

04400001

Rear horizontal rail for backplane mounting with insulation strip

- Subrack with robust side panel and horizontal rail, type R "rugged"
- Rear horizontal rail for backplane mounting with insulation strip
- Shielding typically 40 dB at 1 GHz, 30 dB at 2 GHz (as per VG 95373, part 15), on condition that the front is closed with sealed front panels
- Shock and vibration resistant to 25 *g*

NEW

Delivery comprises (Kit)

Item	Qty 3 U	Qty 6 U	Description
1	2	2	Side panel type R, Al, 3 mm, clear passivated, with 19" support bracket 3.5 mm (tox-cold welded); for EMC gasketing (textile)
2	2	2	Front handle incl. fixing material kit
3	2	2	Rear corner profile for EMC gasketing (textile)
4	1	-	Front horizontal rail (R-KD)
4a	1	2	Front horizontal rail (R-LD)
4b	2	2	Rear horizontal rail (H-KD)
4c	2	2	Rear horizontal rail, centre (R-ST)
4d	-	1	Rear horizontal rail, centre (ST)
5	6	8	Threaded insert (pre-fitted)
6	2	2	Perforated strip (pre-fitted)
7	2	4	Insulation strip (pre-fitted)
8	2	2	EMC cover plate, rugged, with top cover locking
9	1	1	EMC rear panel
10	1	1	EMC gasketing material, fixing material kit, user manual

Order Information

Height U	Width HP	Depth D mm	Depth D1 mm	Part no.
3	84	295	175	**24567-149**
6	84	295	175	**24567-449**
Accessories				
Guide rails, accessories, 160 mm deep PBT, UL 94 V-0, red, groove width 2 mm, PU 10 pieces				**24560-351**
Torx panhead screw 2.5 × 9.3, zinc-plated, PU 100 pieces; torque max. 0.2 Nm				**24560-141**
ESD clip for guide rails PU 50 pieces				**24560-255**
Guide rail accessories for heavy PCBs, extra strong Al extrusion, groove width 2 mm, 160 mm deep, 1 piece (SPQ 10)				**34562-881**
Torx pan head screw 2.5 × 7.3, zinc flake coating, black, 100 pieces; torque max. 0.2 Nm				**24560-157**
Adaptor to accomodate conduction cooled assemblies (CCA) for VPX applications, 160 mm deep, PU 1 pair; includes fixing material kit				24566-004
Adaptor to accomodate conduction cooled assemblies (CCA) for CompactPCI applications, 160 mm deep, PU 1 pair; includes fixing material kit				24566-005
19" dual fixing materials kit suitable for a subrack with double fixing holes (bolts, washers and nuts), PU 1 kit				**24566-109**

Note

- Test reports online
- For further accessories see from page 6.19

Subracks – europacPRO rugged ServicePLUS

configuration

Components can be varied and combined freely

Simple. Fast. To the ideal product.

- Configuration tables from page 6.96
- Online configuration: www.schroff.co.uk/configuration

assembly

Fitting of all mechanical, electrical and electronic components by our specialists

Assembled by professionals. Double benefit!

- Professional and reliable from quantity 1
- Ready for despatch within 5 working days

modification

Custom drillings, cut-outs and special colours for off-the-shelf products

Small changes. Large impact.

- Custom modifications from quantity 1
- Ready for despatch within 10 working days

solution

Integration and custom developments

Simple. Fast. From one source.

- Special sizes (depth and width)
- Individual heat dissipation concepts
- Ready for dispatch within 10 working days

express

Delivery time to customer's request

When fast has to be faster.

- Express logistics

academy

Knowledge transfer and partnership

Knowledge. Sharing. Partnerships.

- Seminars, CAD drawings, test reports, user reports

Subracks – europacPROrugged ServicePLUS

Overview of individual components for shielded or unshielded subracks

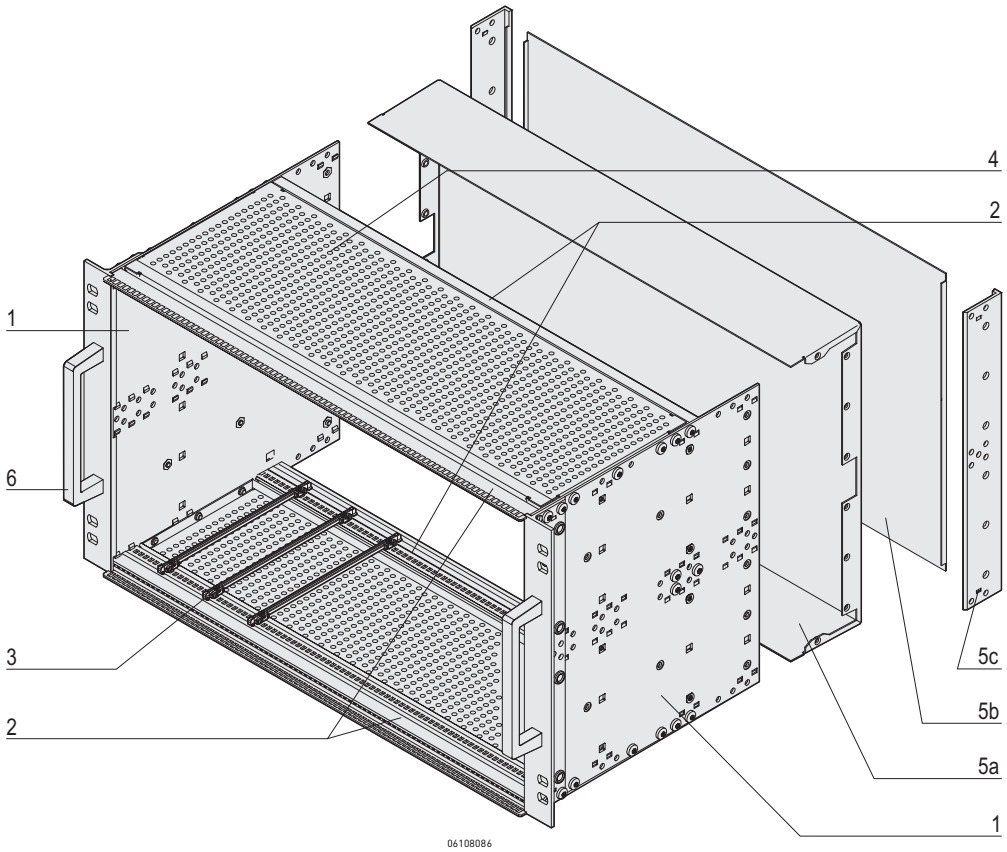

Item	Description	Description	page
Item 1	Side panels	Establish the height and depth of the subrack; Al, 3 mm, with universal hole positions for mounting of accessories	6.97
Item 2	Horizontal rails	Establish the width of the subrack; Al extrusion, with defined hole positions for guide rails, grooves for threaded inserts, M4 thread at front, functional rail shapes, basically differing with regard to their mechanical loading capacity: rugged loading up to 15 kg	6.98
Item 3	Guide rails	Guide rails act as interface between subracks and boards, for different board formats, are available in plastic or metal, optionally codable and optionally can be fitted with ESD clip to allow electrostatic discharge	6.105
Item 4	Cover plates	Provide mechanical protection and/or EMC shielding and are perforated	6.108
Item 5	Rear/front	Rear hood (5a) or front panel (5b) with corner profile (5c) as support for EMC shielding gaskets used in conjunction with shielded front panels; Note: rear hood and corner profile cannot be fitted simultaneously	6.49
Item 6	Handles	Handles can be mounted on the 19" brackets	6.97
–	EMC shielding (without illustration)	Extensive component range for specific shielding of subrack according to your application	6.110
–	Internal mounting (without illustration)	Universal assemblies, e.g. for horizontal and vertical mounting and for mounting plates	6.109 6.60

Subracks – europacPRO rugged ServicePLUS

Side panel type R, EMC sealing, corner profile, front handle

Order Information

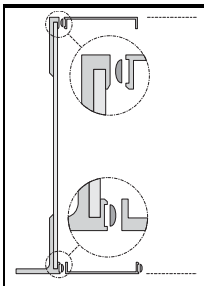

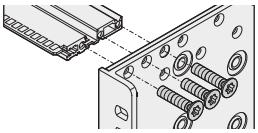

06112054 06112056

Height U	Depth mm	Side panel type R for textile gasket	EMC textile gasket	Corner profile, rugged	Front handle
		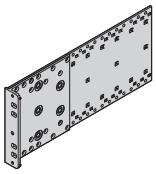 06112059 Side panel, Al 3 mm, tox-cold welded with 19" Al bracket, 3.5 mm with handle hole, clear passivated, front anodised; please order front handles separately	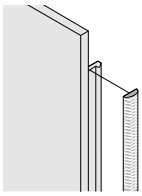 04602054 Textile gasket, core: foam, sleeve: textile cladding with CuNi coating, UL 94 V-0, temperature range -40 ... 70 °C	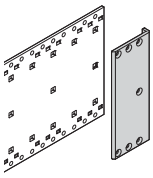 06112058 Al extrusion, 3 mm, finish clear passivated; with lateral grooves for EMC stainless steel gasket; rear hood cannot be used simultaneously	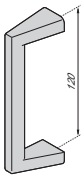 06112057 Die-cast Al profile, powder-coated, RAL 9006; load-carrying capacity 30 kg, fixing material kit
		PU 1 pair	PU 10 pieces	PU 1 pair	PU 1 kit
3	175	24568-145	**21101-853**	24566-199	24566-010
3	235	24568-147			
3	275	24568-143			
3	277.75	24568-144			
3	295	24568-149			
3	355	24568-151			
6	175	24568-445	**21101-855**	24566-499	24566-010
6	235	24568-447			
6	275	24568-443			
6	277.75	24568-444			
6	295	24568-449			
6	355	24568-451			

Fixing material kits see page 6.103

Side panel, type R

- For high mechanical demands up to 25 *g* (vibration resistance, shock and vibration requirements to e.g. IEC 61587-DL 3)
- 19" bracket is fixed firmly to side panel (tox-cold welded)
- Height 3 U and 6 U
- Depths 175, 235, 275, 277.75, 295 and 355 mm
- EMC shielding concept for front/rear with EMC textile gasket
- Other dimensions on request

Mounting position of horizontal rail/central rails

3 U (board depth 160, 220, 280 mm)

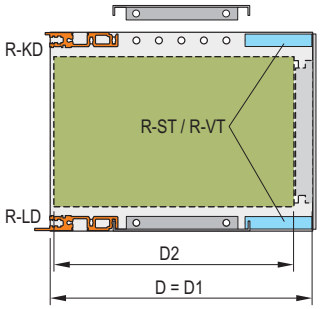

06112061

6 U (board depth 160, 220, 280 mm)

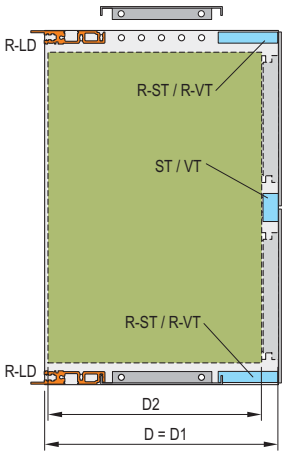

06112062

3 U (board depth 160, 220, 280 mm)

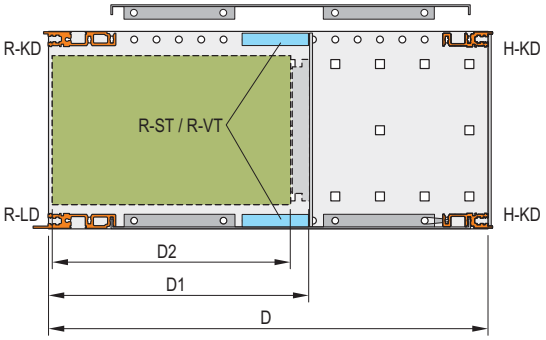

06112063

6 U (board depth 160, 220, 280 mm)

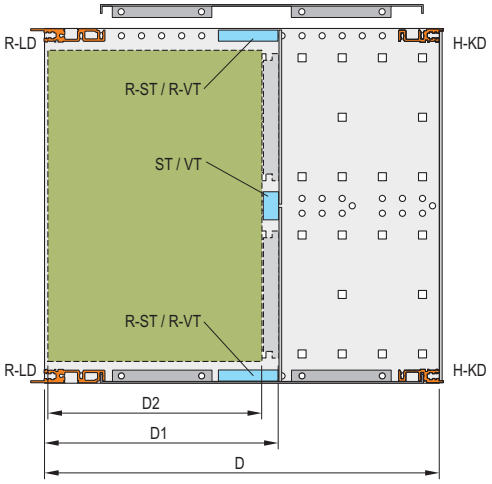

06112064

3 U (for CompactPCI/VME64x applications)

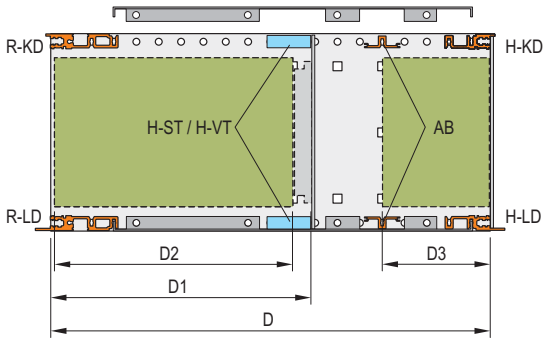

06112065

6 U (for CompactPCI/VME64x applications)

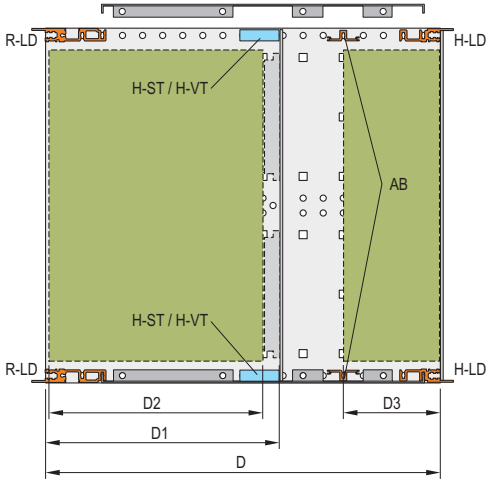

06112066

Horizontal rails

R-ST

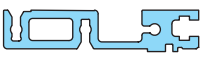

06112070

R-VT

06112071

H-ST

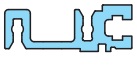

06112072

H-VT

06112073

ST

06112074

VT

06112075

Subracks – europacPRO rugged ServicePLUS

Front horizontal rails

Order Information

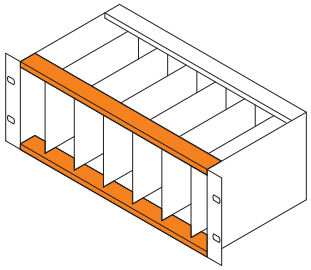 bza44980	With long lip for insertion/ extraction of CompactPCI and VME64x boards "rugged" Type R-LD long lip 06112004	With long lip for insertion/ extraction of CompactPCI and VME64x boards "heavy" Type H-LD long lip 06197008	With short lip "rugged" Type R-KD short lip 06112013	With short lip "heavy" Type H-KD short lip 06197008
With HP markings from 28 HP, Al extrusion, anodised finish, conductive contact surface	Al extrusion, anodised finish, conductive contact surface, with HP markings	Al extrusion, anodised finish, conductive contact surface, with HP markings	Al extrusion, anodised finish, conductive contact surface, with HP markings	Al extrusion, anodised finish, conductive contact surface, with HP markings
Usable length HP / **Length mm**	**1 piece (SPQ 10)[1)]**	**1 piece (SPQ 10)[1)]**	**1 piece (SPQ 10)[1)]**	**1 piece (SPQ 10)[1)]**
20 / 106.68	34566-320	**34560-320**	34566-220	**34560-220**
28 / 147.32	34566-328	**34560-328**	34566-228	**34560-228**
40 / 208.28	34566-340	**34560-340**	34566-240	**34560-240**
42 / 218.44	34566-342	**34560-342**	34566-242	**34560-242**
63 / 325.12	34566-363	**34560-363**	34566-263	**34560-263**
84 / 431.80	34566-384	**34560-384**	34566-284	**34560-284**
– / 1000	34566-301	**34560-301**	34566-201	**34560-201**
Cover strips to cover the horizontal rail perforations Al, untreated, 0.8 mm, length 431.5 mm, 1 piece (SPQ 10) 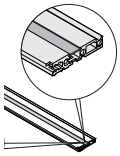	**34566-184**	–	**34566-184**	–
Threaded inserts see page	6.104	6.104	6.104	6.104
Fixing material kits see page	6.103	6.103	6.103	6.103

1) SPQ (standard pack quantity): Part number includes 1 piece, but delivery is exclusively made in standard pack quantity (SPQ); please order at least the SPQ quantity or a multiple
"heavy" load > 7.5 kg; "rugged" load > 15 kg;

Note

- 1000 mm version without M4 thread to front, without printing and without notch for 19"-bracket
- EMC gasket see page 6.56
- For further horizontal rails see page 6.29

Rear horizontal rails

Order Information

	For indirect backplane fixing with insulation strip		For direct backplane fixing		For direct fixing of connectors in accordance with EN 60603-2 (DIN 41612)
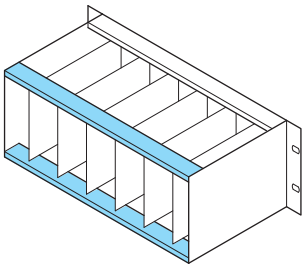 06105074	04400001		04400002		04400003
	"rugged" Type R-ST Standard	"heavy" Type H-ST standard	"rugged" Type R-VT recessed installation	"heavy" Type H-VT recessed installation	"heavy" Type H-MZ with Z-rail
	06112005	06197011	06112006	06197013	06197015
With HP markings from 28 HP, Al extrusion, anodised finish, conductive contact surface	Al extrusion, anodised finish, conductive contact surface, with HP markings	Al extrusion, anodised finish, conductive contact surface, with HP markings	Al extrusion, anodised finish, conductive contact surface, with HP markings	Al extrusion, anodised finish, conductive contact surface, with HP markings	Al extrusion, anodised finish, conductive contact surface, with HP markings
Usable length HP / **Length mm**	**1 piece (SPQ 10)[1)]**	**1 piece (SPQ 10)[1)]**	**1 piece (SPQ 10)[1)]**	**1 piece (SPQ 10)[1)]**	**1 piece (SPQ 10)[1)]**
20 / 106.68	34566-520	**34560-520**	34566-720	**34560-720**	**34560-920**
28 / 147.32	34566-528	**34560-528**	34566-728	**34560-728**	**34560-928**
40 / 208.28	34566-540	**34560-540**	34566-740	**34560-740**	**34560-940**
42 / 218.44	34566-542	**34560-542**	34566-742	**34560-742**	**34560-942**
63 / 325.12	34566-563	**34560-563**	34566-763	**34560-763**	**34560-963**
84 / 431.80	34566-584	**34560-584**	34566-784	**34560-784**	**34560-984**
– / 1000	34566-501	**34560-501**	34566-701	**34560-701**	–
Insulation strips see page	6.104	6.104	–	–	–
Threaded inserts see page	6.104	6.104	6.104	6.104	6.104
Fixing material kits see page	6.103	6.103	6.103	6.103	6.103

1) SPQ (standard pack quantity): Part number includes 1 piece, but delivery is exclusively made in standard pack quantity (SPQ); please order at least the SPQ quantity or a multiple
"heavy" load > 7.5 kg; "rugged" load > 15 kg;

Note

- 1000 mm version without M4 thread to front, without printing and without notch for 19"-bracket
- EMC gasket see page 6.56
- For further horizontal rails see page 6.29

Subracks – europac PRO rugged ServicePLUS

Rear horizontal rails, centre, for 6 U

Order Information

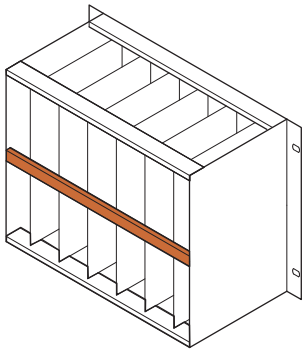

06108090

	For indirect backplane fixing with insulation strip	For direct backplane fixing	For direct fixing of connectors in accordance with EN 60603-2 (DIN 41612
	04400001	04400002	04400003
	Type ST	Type VT	Type MZ
	06197016	06197017	06197018
	Al extrusion, finish anodised, conductive contact surface; without markings	Al extrusion, finish anodised, conductive contact surface; without markings	Al extrusion, finish anodised, conductive contact surface; without markings
Usable length HP / Length mm	1 piece (SPQ 10)[1)]	1 piece (SPQ 10)[1)]	1 piece (SPQ 10)[1)]
20 / 106.68	**34561-020**	**34561-120**	**34561-220**
28 / 147.32	**34561-028**	**34561-128**	**34561-228**
40 / 208.28	**34561-040**	**34561-140**	**34561-240**
42 / 218.44	**34561-042**	**34561-142**	**34561-242**
63 / 325.12	**34561-063**	**34561-163**	**34561-263**
84 / 431.80	**34561-084**	**34561-184**	**34561-284**
– / 1000	**34561-001**	**34561-101**	**34561-201**
Insulation strips see page	6.104	–	–
Threaded inserts see page	6.104	6.104	6.104
Fixing material kits see page	6.103	6.103	6.103

1) SPQ (standard pack quantity): Part number includes 1 piece, but delivery is exclusively made in standard pack quantity (SPQ); please order at least the SPQ quantity or a multiple
"heavy" load > 7.5 kg; "rugged" load > 15 kg;

Note

- All horizontal rails without printed markings
- 1000 mm version without M4 thread to front

Horizontal rails (type AB) for rear I/O applications

Order Information

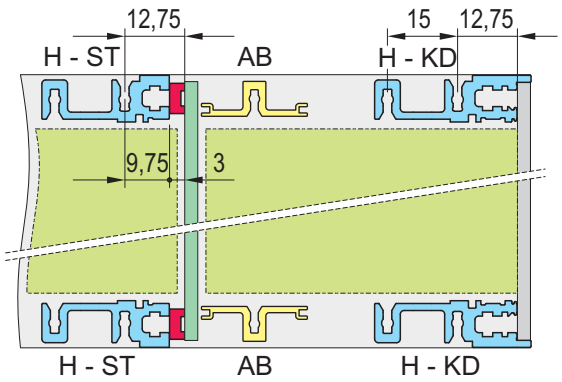

06108069

For CompactPCI in rear I/O area

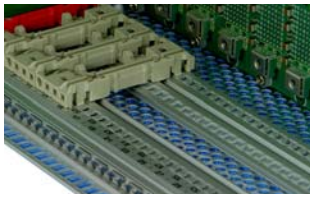

06108009

Type AB

06197019

Al extrusion, finish anodised, conductive contact surface; horizontal rail type AB (AB = support) is required to fix the guide rails for the 80 mm rear I/O boards; without markings

Usable length HP	Length mm	1 piece (SPQ 10)[1]
20	106.68	**34561-520**
28	147.32	**34561-528**
40	208.28	**34561-540**
42	218.44	**34561-542**
63	325.12	**34561-563**
84	431.80	**34561-584**
–	1000	**34561-501**
Fixing material kits see page		6.103

1) SPQ (standard pack quantity): Part number includes 1 piece, but delivery is exclusively made in standard pack quantity (SPQ); please order at least the SPQ quantity or a multiple
"heavy" load > 7.5 kg; "rugged" load > 15 kg;

Note

- All horizontal rails without printed markings
- 1000 mm version without M4 thread in end

Subracks – europacPRO rugged ServicePLUS

Screws overview

	Description	Material	Dimension	Qty/PU	Part no.
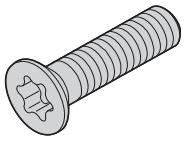 06712051	Countersunk screw, with thread locking compound **Application:** Rugged side panel to horizontal rail; for area of tox-cold welded brackets and corner profiles except when guide rail is fitted to slot 1	Stainless steel	M4 x 18	100	24566-100
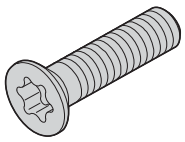 06712051	Countersunk screw, with thread locking compound **Application:** Rugged side panel to horizontal rail; for area of tox-cold welded brackets and corner profiles if guide rail is fitted to slot 1	Stainless steel	M4 x 14	100	24566-101
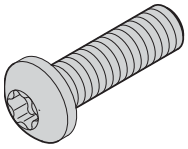 aza45940	Panhead screw, with thread locking compound **Application:** Rugged side panel to horizontal rail; not for area of tox-cold welded brackets and corner profiles except when guide rail is fitted to slot 1	Stainless steel	M4 x 14	100	24566-102
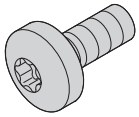 06712053	Panhead screw, with thread locking compound **Application:** Rugged side panel to horizontal rail; not for area of tox-cold welded brackets and corner profiles if guide rail is fitted to slot 1	Stainless steel	M4 x 10	100	24566-103
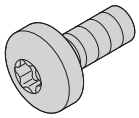 06712053	Panhead screw, with thread locking compound **Application:** Rugged side panel to cover plate, not for area of tox-cold welded brackets and corner profiles	Stainless steel	M4 x 8	100	24566-104
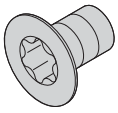 06708053	Torx countersunk screw , with thread locking compound **Application: :** Rugged side panel to cover plate, for area of tox-cold welded brackets and corner profiles	Stainless steel	M4 x 10	100	24566-106
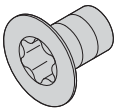 06708053	Torx countersunk screw, with thread locking compound **Application:** Rugged side panel to corner profile; in EMC-shielded subracks and to increase robustness	Stainless steel	M4 x 7	100	24566-105
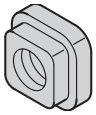 AZA45921	Square nut **Application:** Rugged side panel to corner profile; in EMC-shielded subracks and to increase robustness	Zinc-plated steel	M4	100	**24560-140**

Note

- Stainless steel screws; with organic surface layer (silver)

Threaded inserts, perforated strips, insulation strips

Order Information

	Threaded insert			Perforated strip		Insulation strip	
	M2.5 / M3			Item 1			
	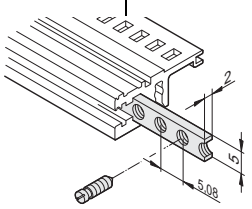			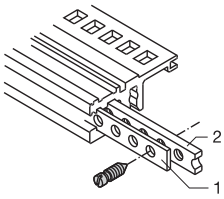		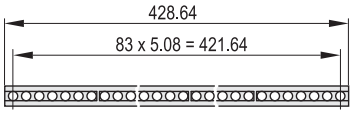	
	06103056			BZA45853		BZ6749	
	required for fixing the front panel to the horizontal rail; St, zinc-plated; use collar screw 12.3 mm, see page 6.66			for centring shielded plug-in units, Al, 1 mm, please order grub screw separately		for insulated mounting of backplane; PBT UL 94 V-0, grey	
	Threaded insert			Perforated strip		Insulation strip	
Usable length HP	Length mm	1 piece (SPQ 10)[1]	1 piece (SPQ 10)[1]	Length mm	1 piece (SPQ 10)[1]	Length mm	PU 10 pieces
20	106.18	**34561-320**	–	106.48	**30845-189**	101.50	**24560-820**
28	146.82	**34561-328**	–	147.12	**30845-197**	144.20	**24560-828**
40	207.78	**34561-340**	–	208.08	**30845-209**	205.12	**24560-840**
42	217.94	**34561-342**	–	218.24	**30845-211**	210.40	**24560-842**
63	324.62	**34561-363**	–	324.92	**30845-232**	316.88	**24560-863**
84	431.30	**34561-384**	**34561-484**	431.60	**30845-253**	428.64	**24560-884**
196	1000.26	**34565-196**	–	1000.26	**34565-396**		–

Accessories

Grub screw M2.5 x 8, PU 100 pieces	**21100-276**	–	–	–	–	–
Grub screw M2.5 x 9, PU 100 pieces	–	–	–	**21101-359**	–	–
Grub screw M3 x 8, PU 100 pieces	–	**21100-646**	–	–	–	–

1) SPQ (standard pack quantity): Part number includes 1 piece, but delivery is exclusively made in standard pack quantity (SPQ); please order at least the SPQ quantity or a multiple

Part no. includes one packing unit (PU); delivery is exclusively made in PU

19" dual fixing materials kit

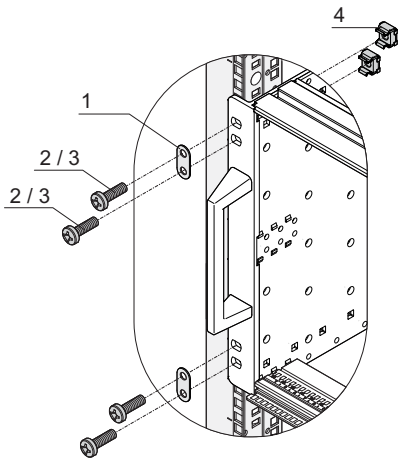

06113052

- For fixing a subrack with dual fixing holes to 19" mounting brackets (e.g. rugged and railroad subracks)

Delivery comprises

Item	Qty	Description
1	4	Double washer, stainless steel
2	8	M6 x 16 (Torx 30 drive)
3	8	M6 x 16 (Pozidrive)
4	8	Cage nut KM6
1	4	User manual

Order Information

Description	Part no.
19" dual fixing materials kit	**24566-109**

Subracks – europacPROrugged

Adaptor to accommodate conduction cooled assemblies (CCA)

Order Information

	Adaptor to accomodate conduction cooled assemblies (CCA) in subracks 06112022 Al die-cast, silver, can be screw-fixed, 0.8" pitch; suitable for heavy and rugged horizontal rails, incl. fixing material kit	
Board length **mm**	**VPX** **PU 1 pair**	**CompactPCI** **PU 1 pair**
160	24566-004	24566-005

2) Part no. includes one packing unit (PU); delivery is exclusively made in PU

Guide rails for plug-in units and frame type plug-in units, one-piece, groove width 2 mm and 2.5 mm

Order Information

Assembly Plastic guide rail - can be clipped into Al extruded horizontal rails - can be clipped into 1.5 mm thick plates **Storage temperature** from -40 °C ... 130 °C			For plug-in units and frame type plug-in units "Standard" 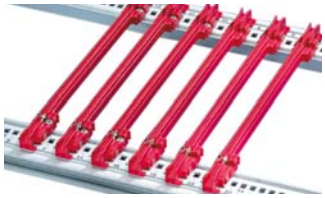 06102001 up to 220 mm length, PBT, UL 94 V-0; from 280 mm length, multi-piece, end piece PBT, UL 94 V-0, central section Al extrusion	PBT, UL 94 V-0
Board length **mm**	**Groove width** **mm**	**Colour** **mm**	**PU 10 pieces**[2]	**1 piece (SPQ 50)**[1]
70	2	red	–	**34579-230**
70	2	grey	–	**34579-231**
160	2	red	**24560-351**	**64560-001**
220	2	red	**24560-353**	**64560-002**
280	2	red	**24560-379**	–
340	2	red	**24560-380**	–
160	2.5	red	–	**64560-096**
220	2.5	red	–	**64560-098**

Accessories

Retention screw, PU 100 pieces; Torque max. 0.2 Nm	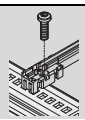	**24560-141**	**24560-141**
ESD clip, PU 50 pieces		**24560-255**	**24560-255**

1) SPQ (standard pack quantity): Part number includes 1 piece, but delivery is exclusively made in standard pack quantity (SPQ); please order at least the SPQ quantity or a multiple

2) Part no. includes one packing unit (PU); delivery is exclusively made in PU

Description of accessories see from page 6.107

Guide rails for heavy assemblies, CompactPCI, VME64x

Order Information

Assembly - can be clipped into Al extruded horizontal rails - can be clipped into1.5 mm thick plates **Storage temperature** from -40 °C ... 130 °C			For CompactPCI, VME64x with coding		For heavy modules, Al extrusion, silver, robust version
			In accordance with IEEE 1101.10 and IEC 60297-3-103	Offset 0.1" for power supply units in accordance with IEEE 1101.10 and IEC 60297-3-103	
			 06106001	 06106002	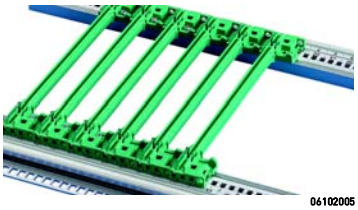 06102005
			One-piece for groove width 2 mm, PBT, UL 94 V-0; **multi-piece** for groove width 2.5 mm, end piece PBT, UL 94 V-0, middle section Al extrusion	PBT, UL 94 V-0, for installation of power supplies in CompactPCI systems or plug-in units with SMD placement	Al extrusion; is screwed to horizontal rail "heavy" with retention screws
Board length mm	**Groove width** mm	**Colour** mm	PU 10 pieces [2]	PU 10 pieces [2]	1 piece (SPQ 10)[1]
70	2	red	**24560-355**	–	–
70	2	grey	**24560-360**	–	–
160	2	red	**24560-356**	–	–
160	2	grey	**24560-358**	–	**34562-881**
160	2	green	–	**24560-359**	–
220	2	grey	–	–	**34562-882**
220	2	green	–	–	**34562-883**
160	2.5	grey	–	–	**34564-881**
220	2.5	red	**24561-330**	–	–
220	2.5	grey	**24561-340**	–	**34564-882**
280	2.5	red	**24561-331**	–	–
280	2.5	grey	**24561-341**	–	**34564-883**

Accessories

ESD clips, PU 50 pieces	**24560-255**	–	–
ESD clips, for alignment pin, PU 50 pieces	**24560-256**	**24560-256**	–
Retention screw, PU 100 pcs.; torque max. 0.2 Nm	**24560-141**	**24560-141**	**24560-157**
Coding peg, PU 100 pieces	**20817-501**	**20817-501**	–

1) SPQ (standard pack quantity): Order number includes 1 piece, but delivery is exclusively made in standard pack quantity (SPQ); please order at least the SPQ quantity or a multiple thereof

2) Order number includes one packaging unit (PU); delivery is exclusively made in PU

Description of accessories see from page 6.107

Subracks – europac PRO rugged ServicePLUS

Guide rail accessories

Order Information

	ESD clips, CompactPCI/VME 64 alignment pin for guide rails	Coding for plug-in components Keying/coding for CompactPCI, VME64x handles to IEEE 1011.10 and IEC 60297-3-103
	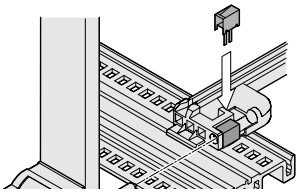 06103052 Spring steel, tin-plated, ESD clip, for alignment pin in accordance with IEEE; can be plugged into the guide rails with coding and into the keying/coding block; provides conductive contact between the guide pin of the inserter/ extractor handle (IEL or IET handle) and the horizontal rail	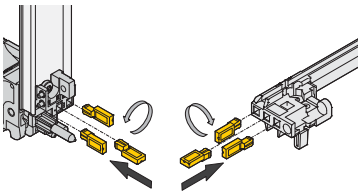 04612052 Keying/coding peg, PBTP, UL 94 V-0, RAL 7035: The keying/coding pegs prevent plug-in units to be mounted in wrong slots. They are inserted in the chambers of the codable card guides as well as in the insertion/extraction handles IEL or IET (4 possible positions), resulting in 64 codings per card guide; when coding the upper and lower card guide, 4096 codings will result;
Assembly	PU 50 pieces [2]	PU 100 pieces [2]
At the top/ at the bottom	**24560-256**	**20817-501**

2) Part no. includes one packing unit (PU); delivery is exclusively made in PU

Guide rail accessories

Order Information

	ESD clip for guide rails
	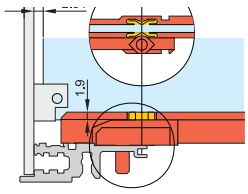 04503050 Spring steel, tin-plated, ensures conductive contact between board and horizontal rail, on both the solder side and the component side
Colour	**silver**
Assembly	PU 50 pieces
above/below	**24560-255**

Cover plates for bolting to rugged side panel

Order Information

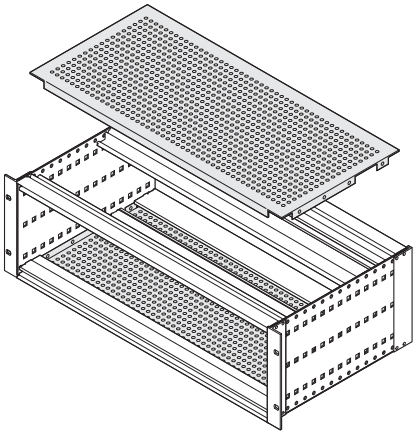

06197010

Cover plate for bolting to side panel

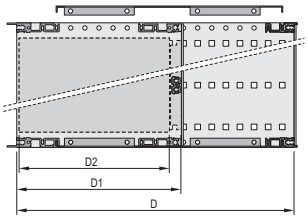

06112054

Perforated Al plate, 1.2 mm, hole diameter 4.0 mm, passivated, perforation ratio 58 %, incl. retention screws;

4 stainless steel EMC contact strips per subrack are required for shielding, please order separately

Stainless steel EMC gasket, between cover plate and horizontal rail

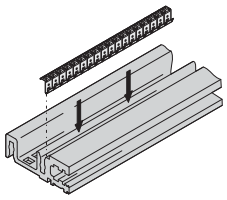

06106052

Stainless steel EMC gasket, clips into the horizontal rail and forms the contact with the cover plate; suitable for all horizontal rails

Width HP	Depth D mm	Application	PU 1 pair	PU 10 pieces	PU 100 pieces
84	175	160 mm board depth (D2)	24568-004	24560-245	24560-246
84	235	220 mm board depth (D2)	24568-008		
84	295	280 mm board depth (D2)	24568-012		
84	275	160 mm board depth (D2) CompactPCI, 80 mm rear I/O	24568-032		
84	277.75	160 mm board depth (D2) CompactPCI, 80 mm rear I/O	24568-036		
84	295	160 mm board depth (D2), approx. 120 mm clearance behind backplane	24568-016		
84	355	220 mm board depth (D2), approx. 120 mm clearance behind backplane	24568-020		

Accessories

Cover plate latch, additional securing for rugged cover plate, PU 4 pieces	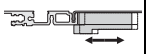	24566-007	–	–
Assembly tool, to fit EMC gasket, stainless steel, for horizontal rails, 1 piece	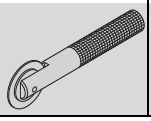	–	24560-271	24560-271

Note

- Cover plates without perforation available on request
- Mounting position of horizontal rails, see page 6.98

Subracks – europacPRO rugged ServicePLUS

Combined mounting (6 U and 2 x 3 U one above the other)

Order Information

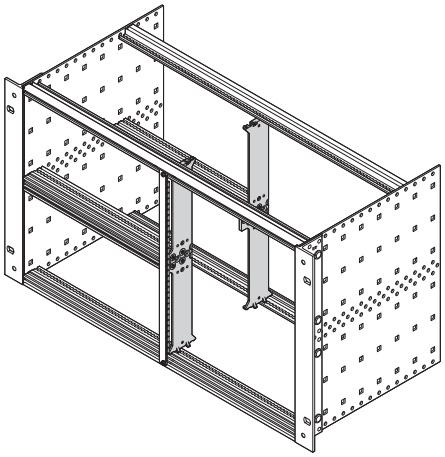 06112076 Height U	Rugged struts for combined mounting 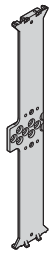 06112077 6 U, die-cast zinc; fixing material kit PU 2 pieces	Front panel for textile EMC gasket, 6 U, 2 HP Item 6 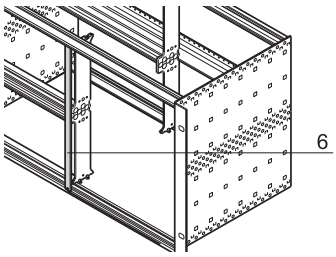 bpa46550 Al, 2.5 mm, U-profile with notch, 6 U, 2 HP 1 piece (SPQ 5)[1)]
6	24566-400	**30849-140**

Accessories

Pozidrive/slotted collar screw M2.5 x 12.3, St, nickel-plated, PU 100 pieces	–	**21101-101**
Pozidrive/slotted collar screw M2.5, black, zinc-plated, PU 100 pieces	–	**21101-102**
Washer 2.7 x 5 x 1, PA 6, PU 100 pieces	–	**21101-121**
Textile gasket, core: foam, sleeve: textile cladding with CuNi coating, UL 94 V-0, PU 10 pieces	–	**21101-855**

Note

- Rugged horizontal rails in various lengths, see page 6.99

EMC gaskets between front/rear panel and horizontal rail

Order Information

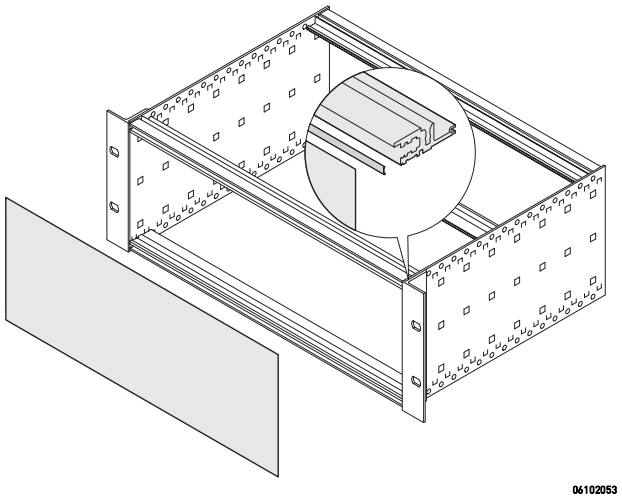

Stainless steel EMC gasket
between front panel/rear panel and horizontal rail

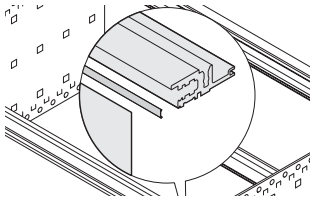

stainless steel; for front and rear horizontal rails (type VT)

Width HP	Depth mm	PU 10 pieces	PU 100 pieces
28	131.8	24560-229	–
42	202.9	24560-231	–
63	304.5	24560-233	–
84	416.6	24560-235	24560-236

EMC gaskets between front panel and 19" bracket/corner profile

Order Information

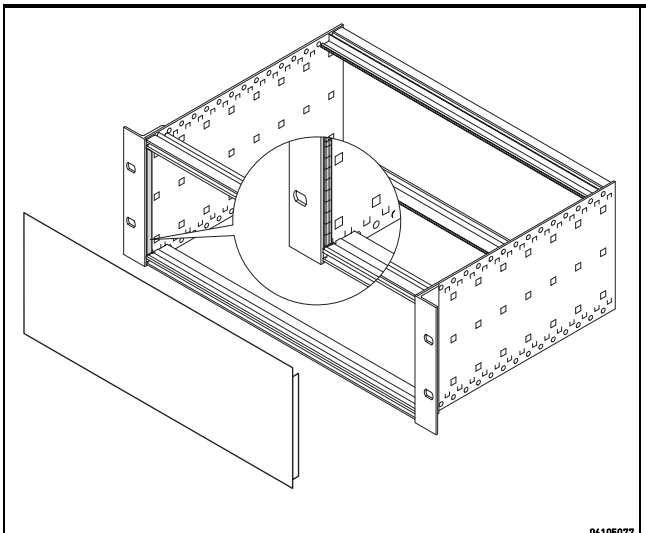

Textile EMC gasket
between front panel/rear panel and 19" bracket/corner profile

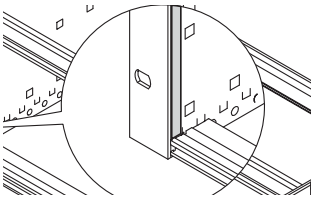

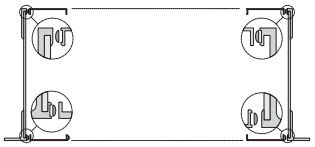

textile gasket,
core: foam,
sleeve: textile cladding with CuNi coating,
UL 94 V-0C

Height U	Depth mm	PU 10 pieces	PU 100 pieces
3	97.5	21101-853	21101-854
6	232.5	21101-855	21101-856

Subracks – europacPROrugged ServicePLUS

EMC gasket between horizontal rail and cover plate

Order Information

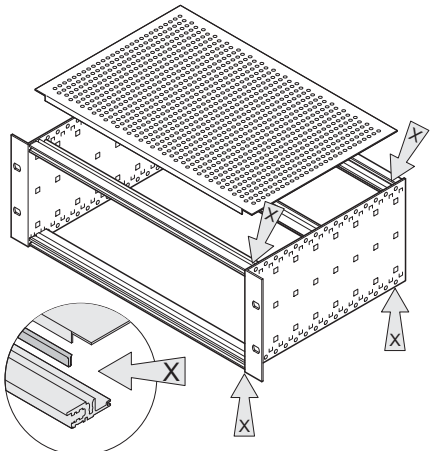

06102052

Stainless steel EMC gasket, between cover plate and horizontal rail

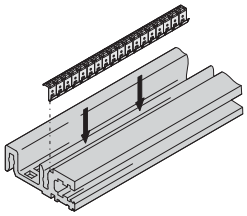

06106052

stainless steel EMC gasket,
clips into the horizontal rail and
forms the contact with the cover plate;
suitable for all horizontal rails

Width HP	Depth mm	PU 10 pieces	PU 100 pieces
42	202.9	**24560-241**	–
84	416.6	**24560-245**	**24560-246**
Assembly tool, to fit EMC gasket, stainless steel, for horizontal rails, 1 piece 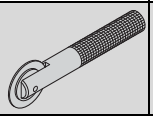		**24560-271**	**24560-271**

EMC gasket between backplane and side panel

Order Information

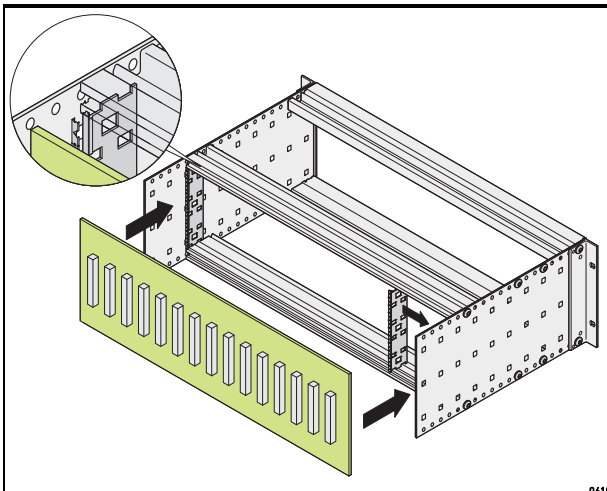

06108078

Stainless steel EMC gasket
between backplane and side panel (depth-offset installation)

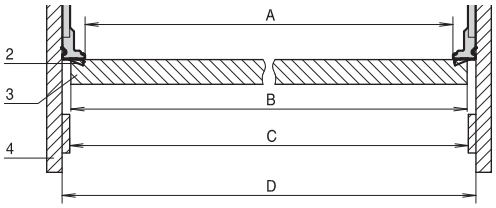

bpa45916

2 x support profile, Al extrusion, 2 x stainless steel EMC gasket;
for vertical EMC shielding between depth-offset shielded backplane and side panel:
dimensions for 84 HP
A = 425.8 mm, B < 429.9 mm, C = 429.8 mm, D = 431.8 mm

Height U	Depth mm	PU 1 kit
3	97.5	**24561-199**
6	187.5	**24561-499**
Torx countersunk screw M4 × 7, St, zinc-plated, PU 100 pieces		24566-105
Square nut M4, St, zinc-plated, PU 100 piece		**24560-140**

With appropriate design, the backplane can be used as shielded rear wall of the rack; in this case a rear horizontal rail (L-type VT or H-VT) must be used for deeper installation to ensure the horizontal contact.

For vertical contact the support profile can be fixed in the standard way to the europacPRO side panel (depth grid 30 mm

Content

19" chassis – multipacPRO

Cabinets 1
Wall mounted cases 2
Accessories for cabinets and wall mounted cases . 3
Climate control . 4
Electronics cases 5
Subracks/ 19" chassis 6
Front panels, plug-in units . . . 7
Systems 8
Power supply units 9
Backplanes . . . 10
Connectors, front panel component system 11
Appendix 12

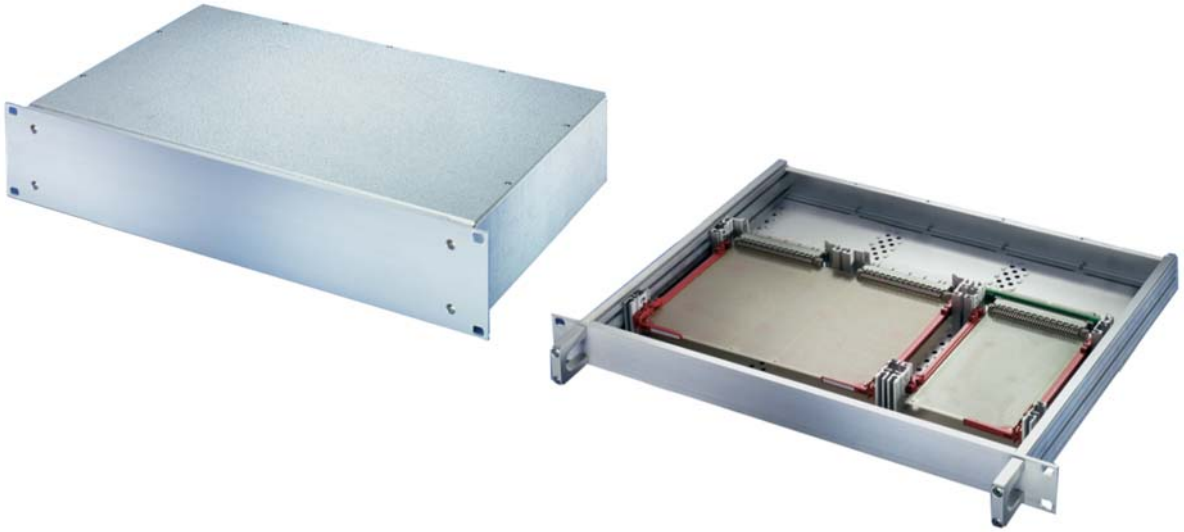

06005001

Standards/certifications

- Exterior dimensions in accordance with: IEC 60297-3-100, 101, 105
- Ingress protection IP 20 in accordance with IEC 60529
- EMC testing in accordance with VG 95373 part 15 or IEC 61587

06008009

Handles can be bolted on from front

06008010

High stability with aluminium profile side panel

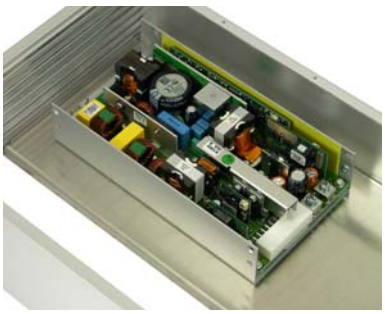

06008011

Mounting plate for fitting heavy components

Top cover and base plate in 3 versions

06008003

Plain

06008005

Perforated

06008004

For standardised board mounting

19" chassis – multipacPRO

The ideal solution for electronic devices in the most compact dimensions

- Aluminium or steel (AlZn coated) designs
- For standardised 19" board mounting or for installation of non-standardised components
- EMC shielding upgradable
- Mounting service and customized machining with ServicePLUS

06008005

19" complete chassis

- 2 materials
  - Steel plate (AlZn coated)
  - Aluminium
- 3 top cover versions
  - Top cover/base plate, solid
  - Top cover/base plate, perforated (aluminium version)
  - Top cover/base plate for standardised PCBs (aluminium version)

06008001

19" chassis, individually configured from separate parts

- For non-standardised assemblies with mounting plate
- For standardised board assembly
- Customised solutions

30407004

ServicePLUS from page 6.118

e.g. individual configuration and assembly
e.g. modification (cut-outs)
e.g. downloads (CAD drawings, user manuals, test reports)
e.g. custom solutions (special sizes)

www.schroff.biz/ServicePLUS

FRONT PANEL EXPRESS

Overview 6.112

19" complete chassis (St) 6.114
19" complete chassis (Al) 6.115

19" chassis for non-standardised assembly 6.120
19" chassis for standardised assembly 6.122

Accessories
Guide rails 6.124
Telescopic slides 1 U 6.125
Telescopic slides 2 U 6.126

ServicePLUS 6.118

Application examples. 6.127

19" complete chassis from steel with plain top cover and base plate

06002003

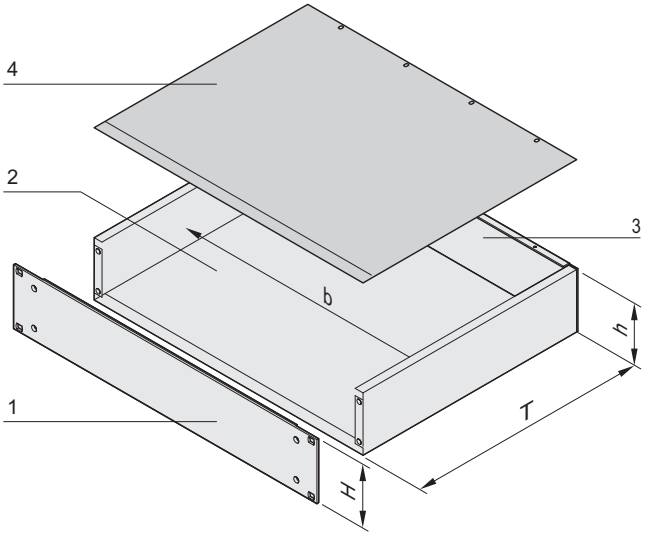

06002051

h = clear height (overall) (H - 3.0 mm)
b = clear installation width = 447 mm

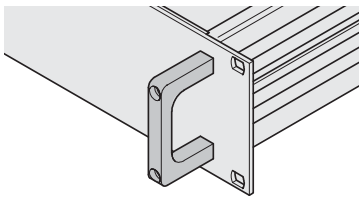

06002052

Front handle

ServicePLUS see page 6.118

- Complete chassis, St (AlZn coated) with Al extrusion front panel
- Detachable rear panel for easy machining
- EMV shielding approx. 20 dB(A) at 1 GHz without additional shielding; > 40 dB(A) at 1 GHz with optional EMC gasketing
- In accordance with standard IEC 60297-3-101
- In the 1 U version 19" and ATX power supplies can be assembled up to a clearance of 40 mm

Delivery comprises (Kit)

Item	Qty	Description
1	1	Front panel, Al extrusion, 3 mm; in 1 U: front anodised, rear etched; from 2 U: front and rear side of front panels clear passivated
2	1	Base body, plain, St, 1 mm, (AlZn coated)
3	1	Rear panel, St, 1 mm (AlZn coated)
4	1	Cover, plain, St, 1 mm (AlZn coated)
5	1	Assembly kit

Order Information

Height U	Height H mm	Depth T mm	Part no.
1	43.7	220	20860-120
1	43.7	280	20860-121
1	43.7	340	20860-122
2	88.1	280	20860-126
2	88.1	340	20860-127
Accessories			
Front handles incl. assembly kit for 1 U, Al extrusion, anodised, PU 2 pieces			20860-256
Front handles incl. assembly kit for 2 U, Al extrusion, anodised, PU 2 pieces			20860-257
EMC sealing to close the gap at the front between case and front panel, 2 saw tooth gaskets, stainless steel, PU 1 piece			20860-132

Note

- Further versions with steel front panel (pizza box) available on request
- Telescopic slides cannot be used
- No special EMC version available
- Standardised internal mounting kits cannot be used

19" chassis – multipacPRO

19" complete chassis from aluminium with plain top cover and base plate

06008003

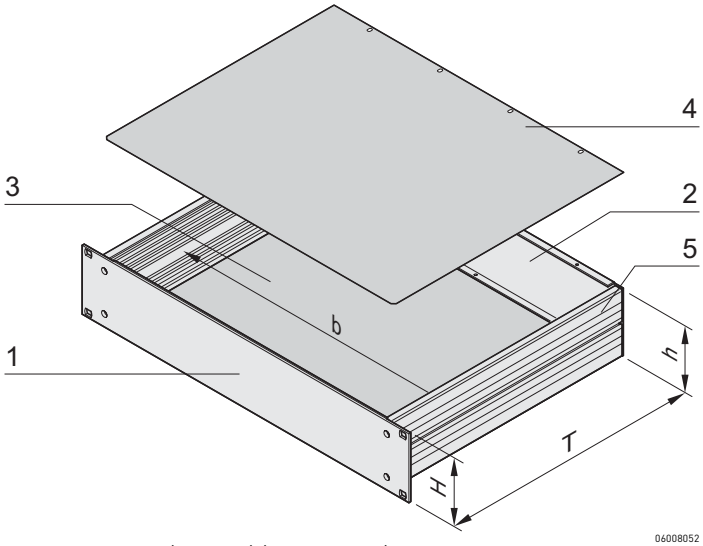

06008052

h = clear height (overall) (H - 8.1 mm)
width = 403 mm

b = clear installation

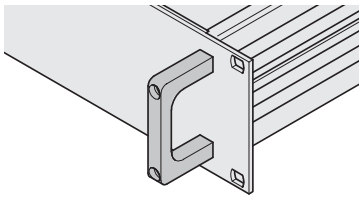

06002052

Front handle

ServicePLUS see page 6.118

- Complete chassis from aluminium
- Detachable rear panel for easy machining
- EMC shielding of approx. 30 dB(A) at 1 GHz (without additonal shielding material)
- In accordance with standard IEC 60297-3-100, -101, -105
- In the 1 U version 19" and ATX power supplies can be assembled up to a clearance of 35 mm

Delivery comprises (Kit)

Item	Qty	Description
1	1	Front panel, Al extrusion, 3 mm; in 1 U: front anodised, rear etched; from 2 U: front and rear side of front panels clear passivated
2	1	Rear panel, Al, 2 mm, etched
3	1	Base plate, plain, Al, 1 mm
4	1	Cover plate, plain, Al, 1 mm
5	2	Side panel, Al extrusion, raw; with grooves for threaded insert (2 × 7); 5 U, two-piece, 3+2 U
6	1	Assembly kit

Order Information

Height U	Height H mm	Depth T mm	Part no. Kit
1	43.7	220	**20860-601**
1	43.7	280	**20860-602**
2	88.1	280	**20860-605**
2	88.1	340	**20860-606**
3	132.6	280	**20860-607**
3	132.6	340	**20860-608**
3	132.6	400	**20860-609**
4	177.0	340	**20860-612**
4	177.0	400	**20860-613**
4	177.0	460	**20860-614**
5	221.5	460	**20860-615**
EMC gasketing kit Silicone/nickel gasket 2100 mm for contacting side panel/cover plate; seal, stainless steel, for front panel/cover plate, 1 kit			**20860-130**
Front handles incl. assembly kit for 1 U, Al extrusion, anodised, PU 2 pieces			**20860-256**
Front handles incl. assembly kit for 2 U, Al extrusion, anodised, PU 2 pieces			**20860-257**
Front handles incl. assembly kit for 3 U, Al extrusion, anodised, PU 2 pieces			**20860-258**
Front handles incl. assembly kit for 4 U, Al extrusion, anodised, PU 2 pieces			**20860-259**
Front handles incl. assembly kit for 5 U, Al extrusion, anodised, PU 2 pieces			**20860-260**

Note

- Threaded inserts to push into the side panel see page 6.121
- Telescopic slides to mount into cabinet see page 6.125

19" complete chassis from aluminium with perforated top cover and base plate

06008005

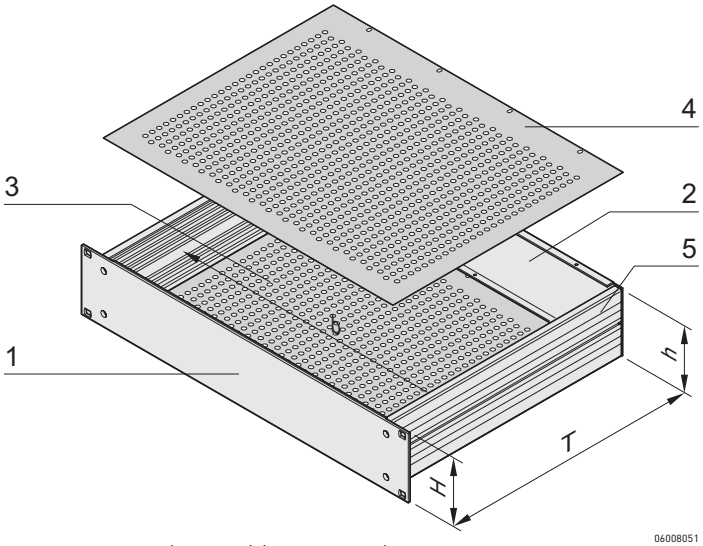

06008051

h = clear height (overall) (H - 8.1 mm)
width = 403 mm

b = clear installation

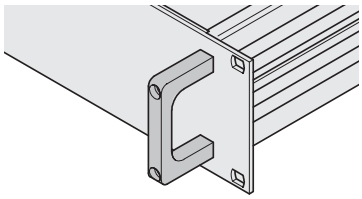

06002052

Front handle

ServicePLUS see page 6.118

- Complete chassis from aluminium
- Detachable rear panel for easy machining
- In the 1 U version 19" and ATX power supplies can be assembled up to a clearance of 35 mm
- EMC shielding of approx. 30 dB(A) at 1 GHz (without additonal shielding material)
- In accordance with standard IEC 60297-3-100, -101, -105

Delivery comprises (kit)

Item	Qty	Description
1	1	Front panel, Al extrusion, 3 mm; in 1 U: front anodised, rear etched; from 2 U: front and rear side of front panels clear passivated
2	1	Rear panel, Al, 2 mm, etched
3	1	Base plate, perforated, Al, 1 mm
4	1	Cover plate, perforated, Al, 1 mm
5	2	Side panel, Al extrusion, raw; with grooves for threaded insert (2 × 7); 5 U, two-piece, 3+2 U
6	1	Assembly kit

Order Information

Height U	Height H mm	Depth T mm	Part no.
1	43.7	220	20860-621
1	43.7	280	20860-622
2	88.1	280	20860-625
2	88.1	340	20860-626
3	132.6	280	20860-627
3	132.6	340	20860-628
3	132.6	400	20860-629
4	177.0	340	20860-632
4	177.0	400	20860-633
4	177.0	460	20860-634
5	221.5	460	20860-635
EMC gasketing kit Silicone/nickel gasket 2100 mm for contacting side panel/cover plate; seal, stainless steel, for front panel/cover plate, 1 kit			20860-130
Front handles incl. assembly kit for 1 U, Al extrusion, anodised, PU 2 pieces			20860-256
Front handles incl. assembly kit for 2 U, Al extrusion, anodised, PU 2 pieces			20860-257
Front handles incl. assembly kit for 3 U, Al extrusion, anodised, PU 2 pieces			20860-258
Front handles incl. assembly kit for 4 U, Al extrusion, anodised, PU 2 pieces			20860-259
Front handles incl. assembly kit for 5 U, Al extrusion, anodised, PU 2 pieces			20860-260

Note

- Threaded inserts to push into the side panel see page 6.121
- Telescopic slides to mount into cabinet see page 6.125

19" chassis – multipacPRO

19" complete chassis from aluminium, for assembly of euroboards

06008004

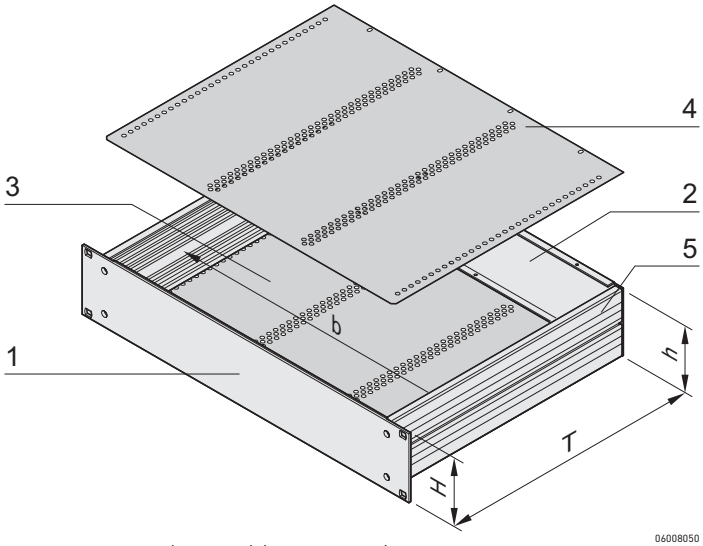

06008050

h = clear height (overall) (H - 8.1 mm)
width = 403 mm

b = clear installation

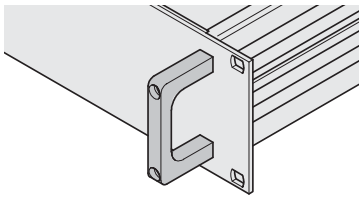

06002052

Front handle

ServicePLUS see page 6.118

- Complete chassis from aluminium
- Detachable rear panel for easy machining
- EMC shielding of approx. 30 dB(A) at 1 GHz (without additonal shielding material)
- In accordance with standard IEC 60297-3-100, -101, -105
- In the 1 U version 19" and ATX power supplies can be assembled up to a clearance of 35 mm

Delivery comprises (Kit)

Item	Qty	Description
1	1	Front panel Al extrusion, 3 mm; in 1 U: front anodised, rear etched; from 2 U: front and rear side of front panels clear passivated
2	1	Rear panel, Al, 2 mm, etched
3	1	Base plate, Al, 1 mm; with drilled holes for horizontal mounting of euroboards
4	1	Cover plate, Al, 1 mm; with drilled holes for horizontal mounting of euroboards
5	2	Side panel, Al extrusion, raw; with grooves for threaded insert (2 × 7)
6	1	Assembly kit

Order Information

Height U	Height H mm	Depth T mm	Part no.
1	43.7	220	20860-641
1	43.7	280	20860-642
2	88.1	280	20860-645
EMC gasketing kit PU 1 kit			**20860-130**
Front handles for 1 U PU 2 pieces			**20860-256**
Front handles for 2 U PU 2 pieces			**20860-257**
Euroboard mounting kit for EN 60603 connector for 1 U PU 1 kit			**20860-115**
Euroboard mounting kit for EN 60603 connector for 2 U PU 1 kit			**20860-117**
Euroboard mounting kit for insulated backplane mounting for 1 U PU 1 kit			**20860-116**
Euroboard mounting kit for insulated backplane mounting for 2 U PU 1 kit			**20860-118**

Note

- Threaded inserts to push into the side panel see page 6.121
- Guide rails see page 6.124
- Telescopic slides to mount into cabinet see page 6.125

19" chassis – multipacPRO ServicePLUS

configuration

Components can be varied and combined freely

Simple. Fast. For the product you want.

- Configuration tables from page 6.119
- Online configuration: www.schroff.co.uk/configuration

assembly

Fitting of all mechanical, electrical and electronic components by our specialists

Assembled by professionals. Double benefit!

- Professional and reliable from quantity 1
- Ready for despatch within 5 working days

modification

Custom drillings, cut-outs and special colours for off-the-shelf products

FRONTPLATTEN EXPRESS

Small changes. Large impact.

- Custom modifications from quantity 1
- Ready for despatch within 10 working days

solution

Integration and custom developments

Simple. Fast. From one source.

- Special sizes (depth and width)
- Individual heat dissipation concepts
- Ready for dispatch within 10 working days

express

Delivery time to customer's request

When fast has to be faster.

- Express logistics

academy

Knowledge transfer and partnership

Knowledge. Sharing. Partnerships.

- Seminars, CAD drawings, test reports, user reports

19" chassis – multipacPROServicePLUS

How to configure 19" aluminium chassis

- Select height and depth of the basic kit
- Select further components

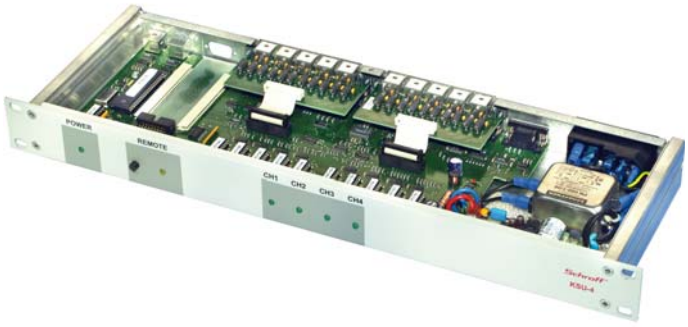

06006001

For non-standardised assemblies (1 ... 5 U)

- Mounting plate
- Top cover/base plate
- Front handles
- EMC gasketing kit
- Telescopic slides

Note

- Non-standardised assemblies see from page 6.120

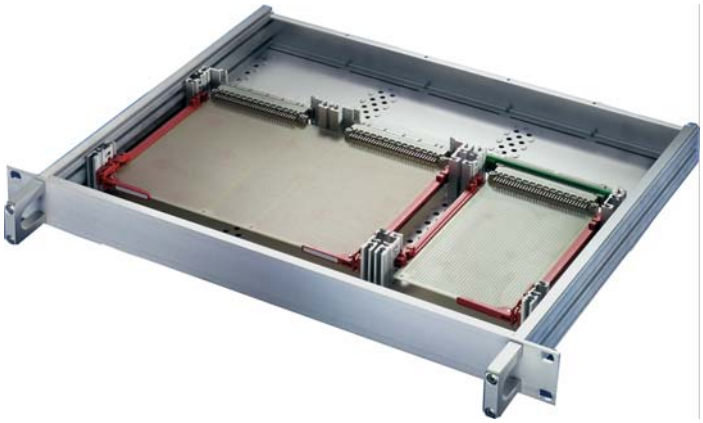

06002001

For standardised assemblies (1, 2 U) in accordance with IEC 60297 -3-100, -101, -105

- Top cover/base plate for horizontal board mounting
- Internal connector or backplane fitting
- Front handles
- EMC gasketing kit
- Telescopic slide

Note

- Standardised assemblies from page 6.122

19" chassis – multipacPROServicePLUS

Individual components 19" chassis for non-standardised assemblies

- Please select:
  - Height and depth of basic kit (1 ... 5 U, item 1+2+5)
  - Mounting plate
  - Top cover/base plate (item 3+4)
  - Front handles
  - EMC gasketing kit
  - Telescopic slides
- In accordance with IEC 60297-3-105

Order Information

				Basic kit	Mounting plate		Top cover/base plate	
							plain	perforated
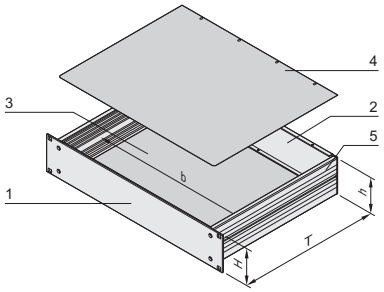 06008052				06002004	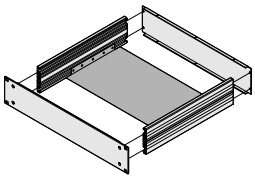 06002058		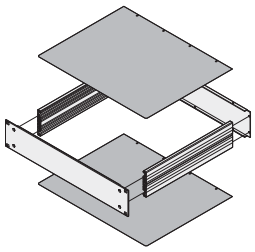 06002053	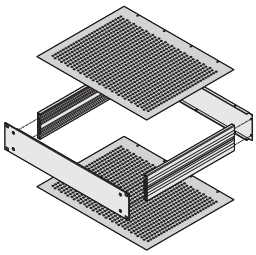 06007050
h = clear height (overall) (H - 8.1 mm) b = clear installation width = 403 mm				1 x Al front panel, 3 mm; 2 x extruded Al side panels; 1 x Al rear panel, 2 mm, incl. fixing material kit	Al plate, 2 mm; threaded insert, St, 2 mm, zinc-plated, height 7 mm, length 431.3 mm, M3 hole clearance 1 HP = 5.08 mm; for heavy equipment		is inserted into the basic kit, Al, 1 mm, passivated; please order EMC gasketing kit separately	is inserted into the basic kit, Al, 1 mm, passivated; hole diameter 4 mm, perforation ratio 58 %
Height U	Height mm	Width HP	Depth mm	PU 1 kit	Depth mm	1 piece	1 piece	1 piece
1	43.7	84	220	20860-201	150	20860-107	30860-501	30860-510
1	43.7	84	280	20860-202	210	20860-108	30860-502	30860-511
1	43.7	84	340	20860-203	270	20860-109	30860-503	30860-512
2	88.1	84	220	20860-210	150	20860-107	30860-501	30860-510
2	88.1	84	280	20860-211	210	20860-108	30860-502	30860-511
2	88.1	84	340	20860-212	270	20860-109	30860-503	30860-512
3	132.6	84	280	20860-219	210	20860-108	30860-502	30860-511
3	132.6	84	340	20860-220	270	20860-109	30860-503	30860-512
3	132.6	84	400	20860-221	330	20860-110	30860-504	30860-513
3	132.6	84	460	20860-222	390	20860-111	30860-505	30860-514
4	177.0	84	280	20860-228	210	20860-108	30860-502	30860-511
4	177.0	84	340	20860-229	270	20860-109	30860-503	30860-512
4	177.0	84	400	20860-230	330	20860-110	30860-504	30860-513
4	177.0	84	460	20860-231	390	20860-111	30860-505	30860-514
5	221.5	84	460	20860-240	390	20860-111	30860-505	30860-514

19" chassis – multipacPROServicePLUS

Individual components 19" chassis for non-standardised assemblies

Order Information

Height U	Height mm	Width HP	Depth D mm	Front handles 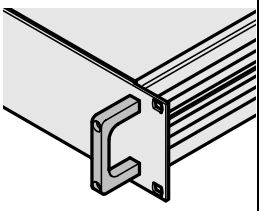 06002052 Al extrusion, anodised, incl. assembly kit see page 5.108 PU 2 pieces	Threaded insert M3 for extruded side panel 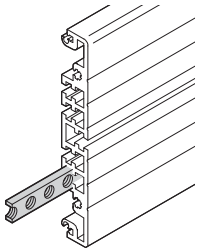 06007051 St, 2 mm, zinc-plated, height 7 mm, length 431.3 mm, M3 hole clearance 1 HP = 5.08 mm 1 piece	EMC gasketing kit Shielding upgrade of approx. 30 dB 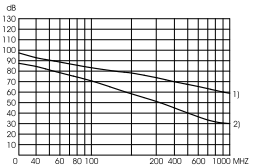 esa44237 Gasket 2100 mm, silicone/nickel, for contacting side panel/ top cover and base plate; sawtooth gasket 400 mm; stainless steel, for contacting front panel/ top cover and base plate PU 1 kit	Assembly kit for telescopic slides 06094004 Assembly kit and adaptor bracket for the cabinets VARISTAR, eurorack, minirack; for mounting the 19in. chassis on telescopic slides; please order telescopic slides separately see page 6.125 PU 1 kit
1	43.7	84	220	**20860-256**	**30821-589**	**20860-130**	**20860-131**
1	43.7	84	280				
1	43.7	84	340				
2	88.1	84	220	**20860-257**			
2	88.1	84	280				
2	88.1	84	340				
3	132.6	84	280	**20860-258**			
3	132.6	84	340				
3	132.6	84	400				
3	132.6	84	460				
4	177.0	84	280	**20860-259**			
4	177.0	84	340				
4	177.0	84	400				
4	177.0	84	460				
5	221.5	84	460	**20860-260**			

Note

- Further sizes available on request
- Al extrusion side panels up to 1000 mm length available on request
- Telescopic slides see page 6.125

19" chassis – multipacPROServicePLUS

Individual components 19" chassis for standardised 19" assemblies

- Please select
  - Height and depth of basic kit (1, 2 U, items 1+2+5)
  - Top cover/base plate for horizontal board mounting (items 3+4)
  - Internal mounting for connector or backplane
  - Front handles
  - EMC gasketing kit
  - Telescopic slides
- In accordance with IEC 60297-3-100, 101, 105

Order Information

				Basic kit	Mounting of euroboards		
					Top cover/base plate	for EN 60603 connectors	for insulated backplane assembly
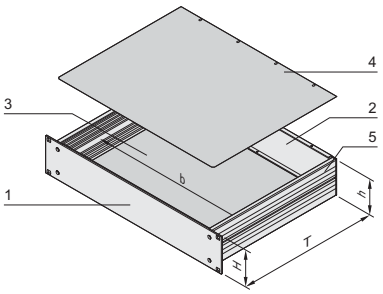 06008052				06002004	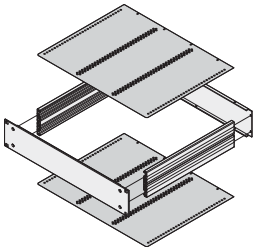 06008053	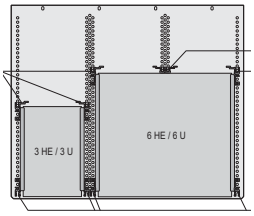 06003050	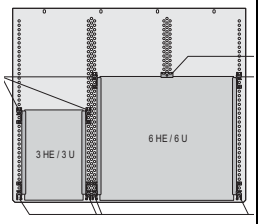 06003051
h = clear height (overall) (H - 8.1 mm) b = clear installation width = 403 mm				1 x Al front panel, 3 mm; 2 x extruded Al side panels; 1 x Al rear panel, 2 mm, incl. fixing material kit	Al, 1 mm; with drilled holes for horizontal mounting of euroboards	2 x front horizontal rails, 2 x rear horizontal rails with Z, 2 x threaded inserts; Sufficient for one 3 U board or one 6 U board	2 x front horizontal rails, 2 x rear horizontal rails, 4 x threaded inserts, 4 x insulation strips PBT, UL 94; Sufficient for one 3 U board or one 6 U board (6 HP for 1 U, 15 HP for 2 U)
Height U	Height mm	Width HP	Depth D mm	PU 1 kit	1 piece	PU 1 kit	PU 1 kit
1	43.7	84	220	20860-201	30860-519	20860-115	20860-116
1	43.7	84	280	20860-202	30860-520	20860-115	20860-116
1	43.7	84	340	20860-203	30860-521	20860-115	20860-116
2	88.1	84	220	20860-210	30860-519	20860-117	20860-118
2	88.1	84	280	20860-211	30860-520	20860-117	20860-118
2	88.1	84	340	20860-212	30860-521	20860-117	20860-118

19" chassis – multipacPROServicePLUS

Individual components 19" chassis for standardised 19" assemblies

Order Information

Height U	Height mm	Width HP	Depth D mm	Front handles 06002052 Al extrusion, anodised, incl. assembly kit see page 5.108 PU 2 pieces	Threaded insert M3 for extruded side panel 06007051 St, 2 mm, zinc-plated, height 7 mm, length 431.3 mm, M3 hole clearance 1 HP = 5.08 mm 1 piece	EMC gasketing kit for shielding upgrade of approx. 30 dB esa44237 Gasket 2100 mm, silicone/nickel, for contacting side panel/ top cover and base plate; sawtooth gasket 400 mm; stainless steel, for contacting front panel/ top cover and base plate PU 1 kit	Assembly kit for fixing on telescopic slides 06094004 Assembly kit and adaptor bracket for the cabinets VARISTAR, eurorack, minirack; for mounting the 19in. chassis on telescopic slides; please order telescopic slides separately see page 6.125 PU 1 kit
1	43.7	84	220	**20860-256**	**30821-589**	**20860-130**	**20860-131**
1	43.7	84	280				
1	43.7	84	340				
2	88.1	84	220	**20860-257**			
2	88.1	84	280				
2	88.1	84	340				

Note

- Further sizes available on request
- Al extrusion side panels up to 1000 mm length available on request
- Telescopic slides see page 6.125

Guide rails for boards without front panels, one-piece, groove width 2 mm

Order Information

Assembly - can be clipped into horizontal rails in Al extrusion - can be clipped into 1.5 mm thick plate Storage temperature from -40 °C ... +130 °C			Guide rails "Accessories" 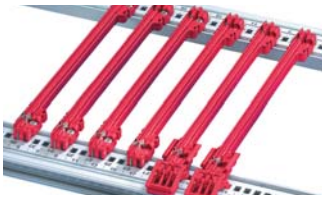 06102002 up to 280 mm length, PBT, UL 94 V-0; > 280 mm length, multi-piece, end piece PBT, UL 94 V-0, middle section Al extrusion
Board length mm	Groove width mm	Colour mm	PU 10 pieces [2]
160	2	red	24560-373
220	2	red	24560-374
280	2	red	24560-375
340	2	red	24560-376
Retention screw, PU 100 pieces 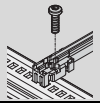			24560-141

2) Part no. includes one packing unit (PU); delivery is exclusively made in PU

Guide rail accessories

Order Information

ESD clip for guide rails	Board locking for PCBs without front panel	Board handle for board locking	Identification strips for board handle
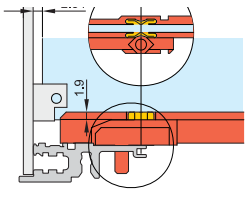 04503050	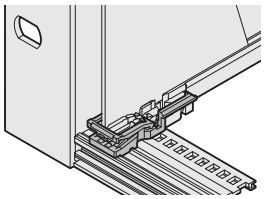 04805050	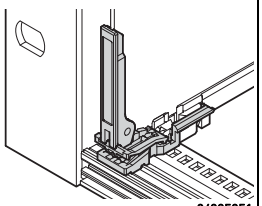 04805051	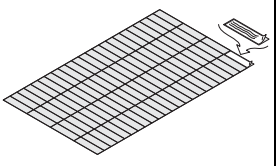 06108076
Spring steel, tin-plated, ensures conductive contact between board and horizontal rail, on both the solder side and the component side	PBT, UL 94 V-0, red, to fix the PCB in the subrack (also slot 1), can also be used without board handle, minimum distance 3 HP	PBT, UL 94 V-0, red, insertion/ extraction function with connection to board locking (also slot 1), mounting directly behind front panel (upper and lower), minimum distance 3 HP	Polyester film, 31 x 4 mm, self-adhesive, white/matt (1 A4 sheet contains 438 pieces) PBT, UL 94 V-0
PU 50 pieces	PU 10 pieces	PU 10 pieces	1 piece
24560-255	24560-377	24560-378	60817-228

19" chassis – multipacPROServicePLUS

Universal 1 U telescopic slide

00505011

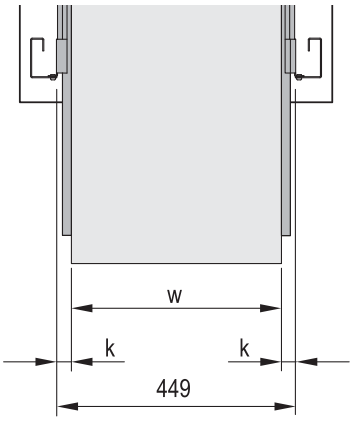

00505060

k = rail width, w = max. installation width

- Static load-carrying capacity per pair 23 - 39 kg
- Lateral mounting on the 19" uprights (19" plane remains free for fixing the extension/drawer)
- Can be removed
- Extension length > 100 %
- Rail width k = 9.7 mm,
  max. installation width of extension/drawer w = 429 mm

Delivery comprises

Item	Qty	Description
1	2	Telescopic slide, St, zinc-plated

Order Information

Length L	Extension length Y	Load-carrying capacity P	Part no.
mm	mm	kg	
356	381	39	**20110-090**
406	432	36	**20110-091**
457	483	34	**20110-092**
508	533	32	**20110-093**
559	584	29	**20110-094**
610	635	27	**20110-095**
660	686	23	**20110-096**
711	737	23	**20110-097**

Note

- For mounting into Schroff cabinets please order assembly kit separately, see page 6.123

Dimensions table

L	Internal part								External part		
	A	B	C	D	E	F	G	X	O	P	Q
356	29.5	92.1	184.2	276.2	-	-	-	349.3	304.6	317.3	330.0
406	29.5	92.1	184.2	276.2	-	-	-	349.3	355.4	368.1	380.8
457	29.5	92.1	184.2	276.2	-	-	-	349.3	406.4	419.1	431.8
508	89.9	92.1	184.2	276.2	368.3	-	-	501.7	457.4	470.1	482.8
559	89.9	92.1	184.2	276.2	368.3	-	-	501.7	508.1	520.8	533.5
610	89.9	92.1	184.2	276.2	368.3	-	-	501.7	558.6	571.3	584.0
660	7.4	92.1	184.2	276.2	368.3	460.4	552.4	603.3	609.4	622.1	634.8
711	7.4	92.1	184.2	276.2	368.3	460.4	552.4	603.3	660.2	672.9	685.6

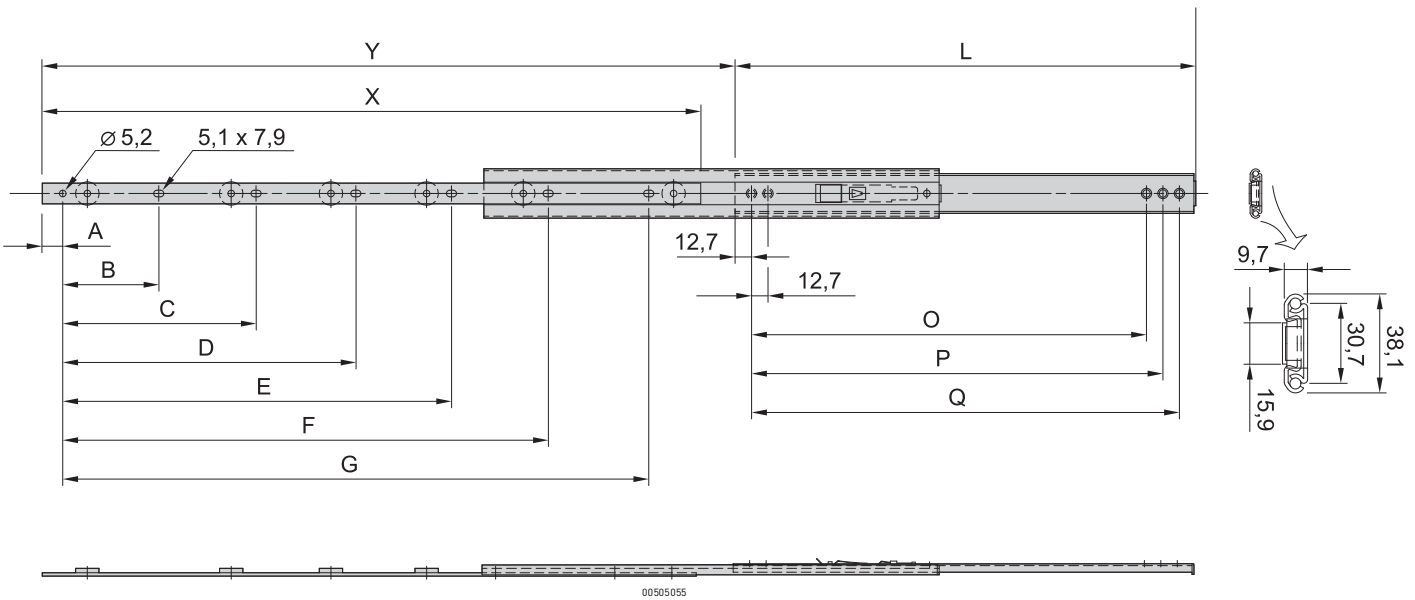

00505055

19" chassis – multipacPROServicePLUS

Universal 2 U, slim telescopic slide

00505009

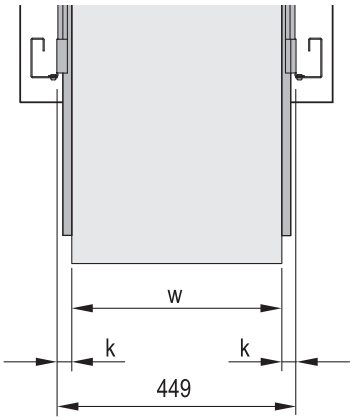

0050506000505059

k = rail width, w = max. installation width

- Static load-carrying capacity per pair 46 - 57 kg
- Lateral mounting on the 19" uprights (19" plane remains free for fixing the extension/drawer)
- Locking at full extension
- Extension length > 110 %
- Rail width k = 9,7 mm,
  max. installation width of extension/drawer w = 429 mm

Delivery comprises

Item	Qty	Description
1	2	Telescopic slide, St, zinc-plated

Order Information

Length L	Extension length Y	Load-carrying capacity P	Part no.
mm	mm	kg	
356	432	57	**20110-071**
406	483	55	**20110-072**
457	533	55	**20110-073**
508	584	55	**20110-074**
559	635	46	**20110-075**
584	660	46	**20110-076**
610	686	46	**20110-077**
Accessories			
Assembly kit for VARISTAR, for assembly of 2 telescopic slides, PU 1 kit			**21120-161**
Assembly kit for eurorack, for assembly of 2 telescopic slides, PU 1 kit			**21120-162**
Telescopic slides mounting kit for NOVASTAR, to mount 2 telescopic slides, PU 1 kit			**21120-163**
Delivery: supplied loose with cabinet or frame			**Part no./35**

Dimensions table

Length L	Internal part				External part		
	A	w	C	X	D	E	F
356	101.6	184.2	304.8	356.0	101.6	228.6	330.2
406	127.0	209.6	355.6	406.0	127.0	254.0	381.0
457	127.0	235.0	406.4	457.0	152.4	279.4	431.8
508	152.4	260.4	457.2	508.0	152.4	330.2	482.6
559	203.2	412.8	508.0	559.0	177.8	355.6	533.4
584	203.2	431.8	533.4	584.0	177.8	381.0	558.8
610	203.2	438.2	558.8	610.0	203.2	381.0	584.2

Note

- To mount on 19" plane please order assembly kit separately
- Universal telescopic rails can also be fitted without additional components in non-standard applications, thus also in other than 19" cabinets

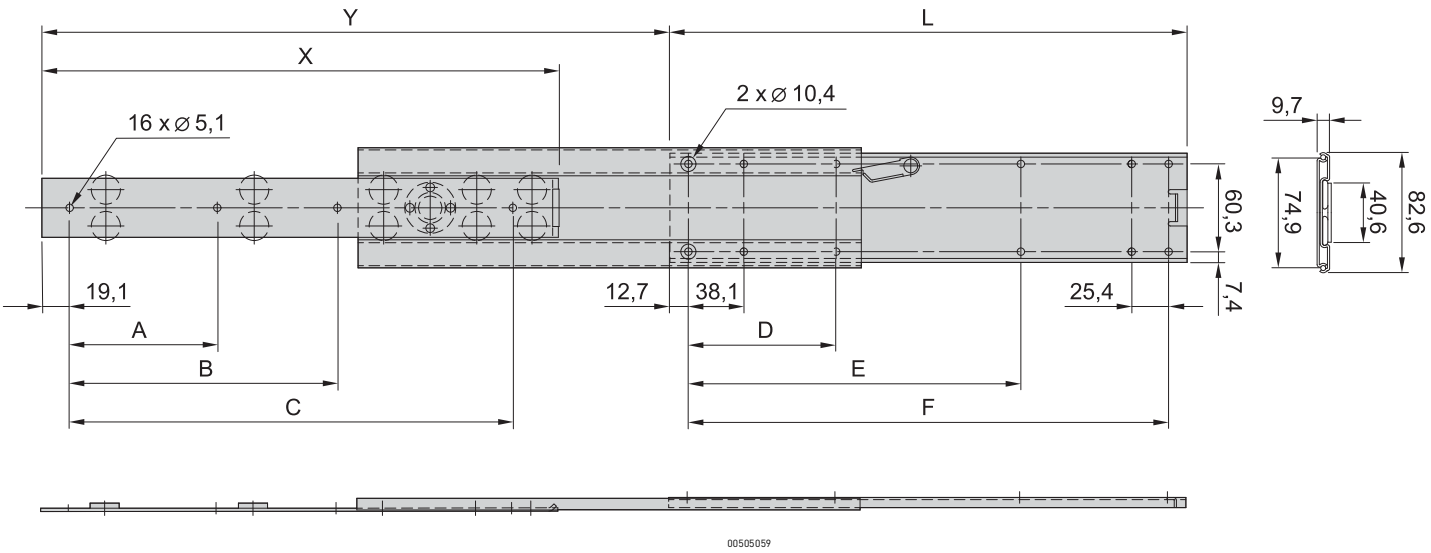

00505059

19" chassis – multipacPRO ServicePLUS

Customised solutions

06002006

Application: Different cut-outs

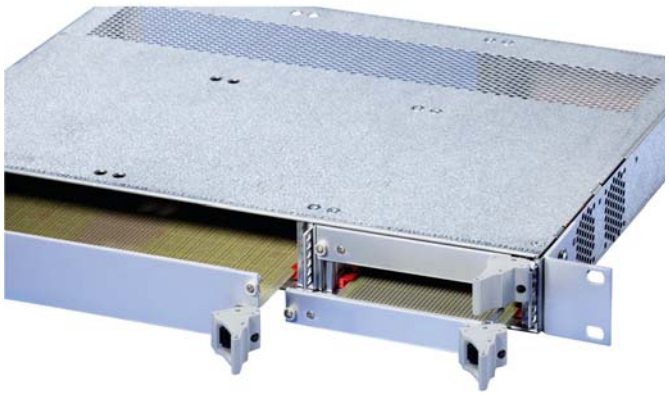

06002007

Application: Combined 3 U and 6 U assembly

06002005

Application: 2 U version with 2 x 3 U assembly

06008006

Application: 1 U multipacPRO (pizza box) complete from steel plate; 19" brackets can be removed if required

06108007

Application: 1 U multipacPRO complete from steel plate; front panel in aluminium with cut-outs

06101008

Application: 1 U multipacPRO complete from steel plate; printed 19" front panel in aluminium with cut-outs

Content

Cabinets 1
Wall mounted cases 2
Accessories for cabinets and wall mounted cases . 3
Climate control . 4
Electronics cases 5
Subracks/ 19" chassis 6
Front panels, plug-in units . . . 7
Systems 8
Power supply units 9
Backplanes . . . 10
Connectors, front panel component system 11
Appendix 12

19" chassis – *inpac*

02192001

02192005

Robust 19" chassis, also for board assembly

02196001

Assembly with boards and hinged front panel

Standards

- External dimensions in accordance with: IEC 60297-3-101
- Ingress protection IP 20 to IEC 60529
- GND/earthing connectors to:
  DIN EN 50178/VDE 0160
  DIN EN 60950/VDE 0805
  DIN EN 61010-1/VDE 0411 part 1
  DIN EN 61010-1A2/VDE 0411 part 1/A1

19" chassis – *inpac*

Overview 6.128

19" chassis with high mechanical stability

- Also usable as desk-top case
- Robust cases from aluminium die-cast frames to front and rear
- Flexible assembly for standardised board formats or individually, e.g. for mounting plates
- Cost benefit with mounting service and custom processing in ServicePLUS

02192002

19" chassis/desk-top enclosure

- 2 U, 3 U, 4 U and 6 U heights

02192003

inpac built into 19"cabinet

30407004

ServicePLUS from page 6.118

e.g. individual configuration and assembly from 1 piece
e.g. printing
e.g. cut-outs in front or rear panels or cover plates
e.g. modification (special colours)
e.g. custom solutions (special depths, electromagnetically shielded applications)

www.schroff.biz/ServicePLUS

inpac
19" chassis 6.130

Accessories
Full-width front panels 6.131
Full-width rear panels 6.131
Support rails 6.132
Horizontal rails ... 6.132
Front handles 6.133
GND/ earthing kit 6.133
Guide rails 6.134
Dimensions 6.136

ServicePLUS .. 6.118

19" chassis

02192006

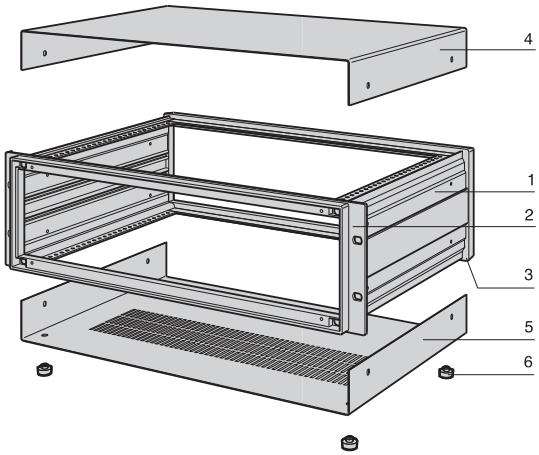

ipa30632

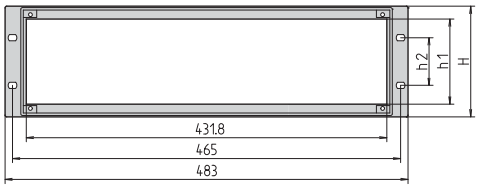

IPA30635

h1 = useable height

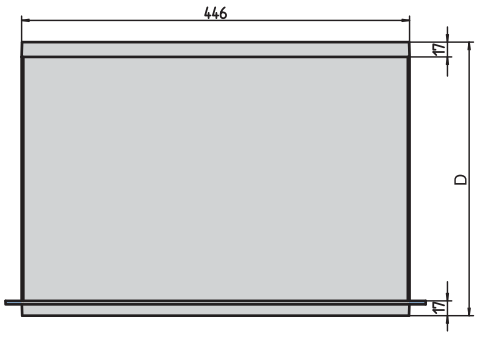

IPA30704

IPA30706

- For assembly with 19" components or individually with mounting plates
- Three rows ventilation slots in base for air inlet

Delivery comprises (Kit)

Item	Qty	Description
1	2	Side panel, Al extrusion, RAL 7030, at 6 U: 2 Al corner profiles, 1 divider plate (steel plate)
2	1	Front frame, Al die-cast, RAL 7030, rear side with counterbores for drill holes to mount handles and front panels
3	1	Rear frame, Al die-cast, RAL 7030
4	1	Cover plate, St, 1 mm, RAL 7035, plastic-coated, with GND/earthing connection
5	1	Base plate, St, 1 mm, RAL 7035, plastic-coated, with GND/earthing connection
6	4	Case foot with anti-slip protection, PC, UL 94 V-0
7	1	Assembly kit

Order Information

Height H U	Height H mm	h mm	h1 mm	h2 mm	Depth D mm	Part no.
2	88.0	86.0	57.5	76.2	254.5	**10828-071**
2	88.0	86.0	57.5	76.2	314.5	**10828-072**
2	88.0	86.0	57.5	76.2	374.5	**10828-073**
3	132.5	130.5	102.0	57.1	254.5	**10828-051**
3	132.5	130.5	102.0	57.1	314.5	**10828-052**
3	132.5	130.5	102.0	57.1	374.5	**10828-053**
3	132.5	130.5	102.0	57.1	434.5	**10828-054**
4	177.0	174.5	146.5	101.6	254.5	**10828-056**
4	177.0	174.5	146.5	101.6	314.5	**10828-057**
4	177.0	174.5	146.5	101.6	374.5	**10828-058**
4	177.0	174.5	146.5	101.6	434.5	**10828-059**
6	265.9	263.5	235.4	190.5	374.5	**10828-068**
6	265.9	263.5	235.4	190.5	434.5	**10828-069**

Note

- Max. installation space when fitting 19" components is 75 HP
- Scope of delivery includes screws to fix rear and front panels

ServicePLUS see page 6.118

19" chassis – inpac

Front panel

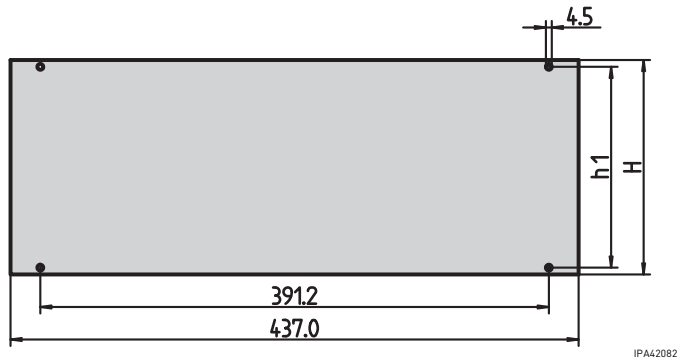

Delivery comprises

Item	Qty	Description
1	1	Front panel, Al, 2.5 mm, anodised, cut edges untreated

Order Information

Height U	Height H mm	h1 mm	Part no.
2	76.0	65.6	**30828-055**
3	120.5	110.0	**30828-058**
4	165.0	154.5	**30828-061**
6	253.8	243.4	**30828-067**

Note

- The assembly kit for the front panel is included with the 19" chassis

Front panel, bottom-hinged

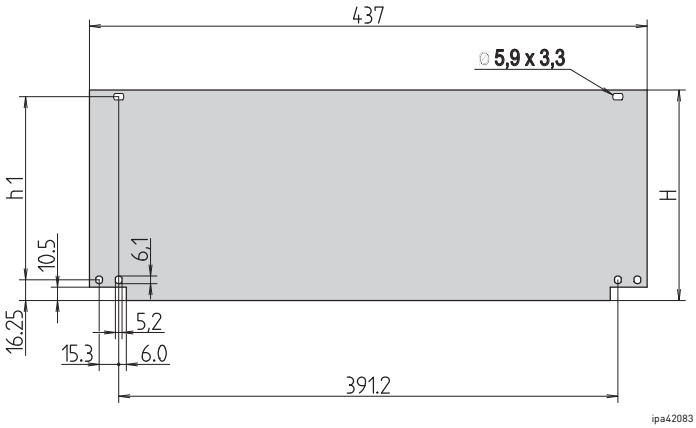

Delivery comprises

Item	Qty	Description
1	1	Front panel, hinged, Al, 2.5 mm, anodised, cut edges untreated

Order Information

Height U	Height H mm	h1 mm	Part no.
2	76.0	54.5	**30828-085**
3	120.5	99.0	**30828-088**
4	165.0	143.5	**30828-091**
6	253.8	232.3	**30828-097**
Hinge for front panel PPE, UL 94 V-0, PU 1 kit (includes fixing material kit and 2 collar screws)			**20828-028**

Note

- Please order hinge for front panel separately

Rear panel with ventilation openings

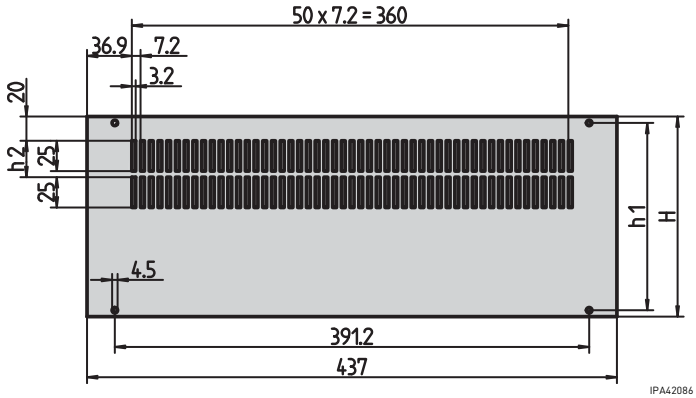

Delivery comprises (kit)

Item	Qty	Description
1	1	Rear panel, incl. assembly kit, Al, 2.5 mm, anodised, cut edges untreated

Order Information

Height U	Height H mm	h1 mm	h2 mm	Part no.
2	76.0	65.6	–	**30828-070**
3	120.5	110.0	–	**30828-073**
4	165.0	154.5	–	**30828-076**
6	253.8	243.4	30	**30828-082**

Note

- The scope of delivery of the 19" chassis includes an assembly kit for the front panel

Support rail for guide rails

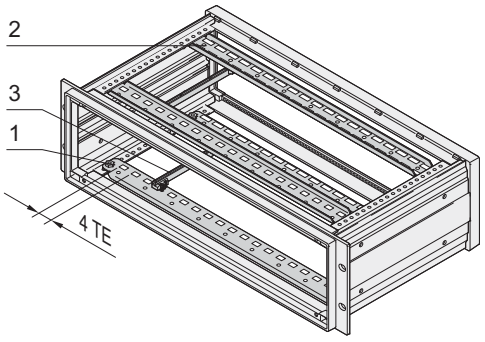

IPA30639

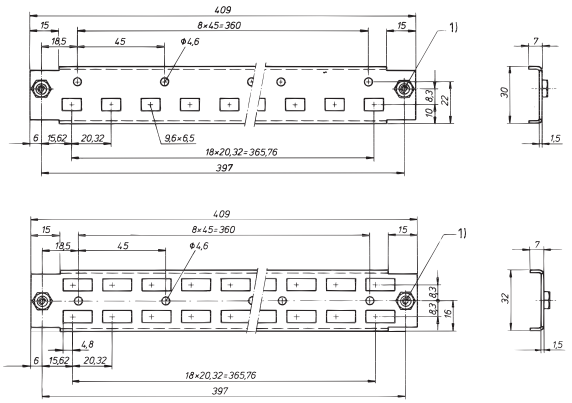

a3-308xx

Dimension drawing top: Front support rail,
dimension drawing bottom: rear support rail;
1) bush M4, pressed-in

- 4 support rails to fix PCBs with guide rails
- Support rail can also be used to fix a custom mounting plate

Order Information

Item	Description	Part no.
1	front support rail, St, 1.5 mm, blue-passivated, 1 piece	**30828-165**
2	rear support rail, St, 1.5 mm, blue-passivated, 1 piece	**30828-174**
Accessories		
	Guide rail 160 mm (Item 3), PBT, UL 94 V-0, with integrated fixture for connector to EN 60603 (DIN 41612), PU 1 pair	**60817-078**
	Guide rail 220 mm (Item 3), PBT, UL 94 V-0, with integrated fixture for connector to EN 60603 (DIN 41612), PU 1 pair	**60817-079**
	Screw for mounting of support rails, M4 × 8, flathead bolts with posidrive, PU 100 pieces	**21100-677**

- Guide rails see page 6.134

Horizontal rail for guide rails, backplane and connector mounting

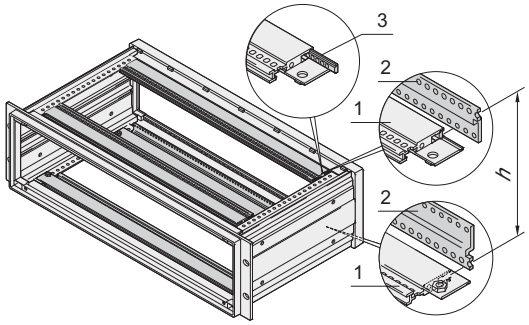

IPA30640

Item 1: horizontal rail, item 2: Z-rail, item 3: threaded insert

h U	Bolt-on dimension of backplane mm
2	75.40
3	119.80
4	164.30
6	252.90

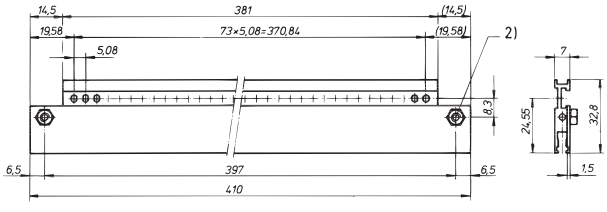

A4-587

2) bush M4, pressed-in

- 4 horizontal rails to fix guide rails (for PCBs) and for backplane or connector mounting
- Useable width 75 HP

Order Information

Item	Description	Qty/PU	Part no.
1	Horizontal rail 75 HP, Al extrusion, anodised	1	**30828-128**
Accessories			
	Z-rail (item 2), Al extrusion, anodised, 1 piece		**30814-513**
	Threaded insert (item 3), St, zinc-plated (blue), 1 piece		**30819-604**
	Screw to fix horizontal rails, M4 × 8, Pozidrive flathead screw, 100 pieces		**21100-677**
	Cheesehead screw with slot M2.5 × 6, DIN 84, PU 100 pieces M2.5 × 6, DIN 84, 100 pieces		**21100-146**

Note

- Threaded inserts cannot be used at front
- For backplane mounting, threaded inserts are required in the rear horizontal rails
- For connector mounting, threaded inserts and Z-rails are required in the rear horizontal rails
- Guide rails see page 6.134

19" chassis – inpac

Front handles

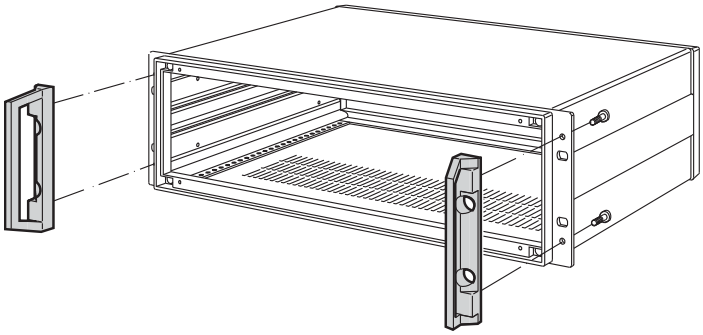

IPA30636

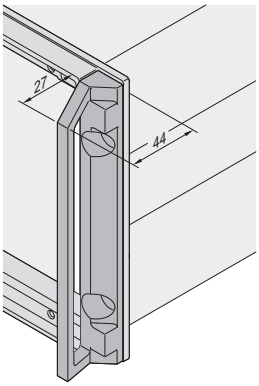

02108050

- Load-carrying capacity 35 kg per pair

Delivery comprises (kit)

Item	Qty	Description
1	2	Front handle, Al die-cast, powder-coated, RAL 7030, incl. assembly kit

Order Information

Height U	Part no.
3	**20828-127**
4	**20828-128**
6	**20828-129**

GND/earthing kit

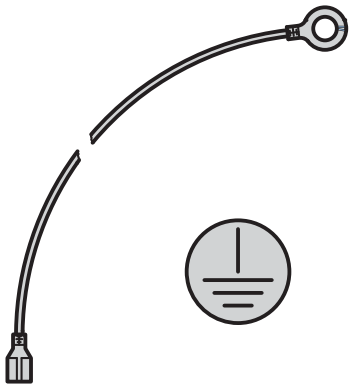

aza43284

- The GND/earthing kit allows VDE-compliant earthing of the case to:
  - DIN EN 50178/VDE 0160
  - DIN EN 60950/VDE 0805
  - DIN EN 61010-1/VDE 0411 Part 1
  - DIN EN 61010-1A2/VDE 0411 Part 1/A
- VDE inspection has been carried out

Order Information

Description	Qty/PU	Part no.
GND/earthing kit, Cu wire, 1.5 mm^2, PVC sleeve, green/yellow, links side panels, top cover, base plate and rear panel	1	**21100-814**

Guide rails

Order Information

		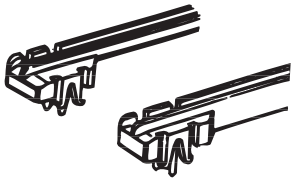 a4-2744X		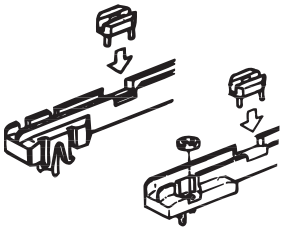 A42744b		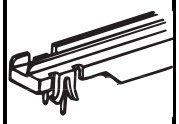 a42744c	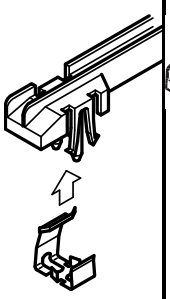 bza44247	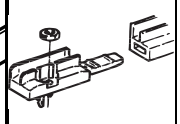 a4-2744d
		Light version, snap-in	Standard version, snap-in	Version with board fixing, snap-in	Version with board fixing, bolt-on	Version for heavy load-carrying capacity, snap-in	Version with ESD clip	Universal version with Al middle section, bolt-on
Board lengths mm mm	Groove width mm mm	Part no. 1 piece (SPQ 50)[1)]	Part no. 1 piece (SPQ 50)[1)]	Part no. 1 piece (SPQ 50)[1)]	Part no. 1 piece (SPQ 50)[1)]	Part no. 1 piece (SPQ 50)[1)]	Part no. Qty/PU 1 piece	Part no. Qty/PU 1 piece
100	2	–	60817-015	–	–	–	–	–
160	2	60817-064	60817-103	60817-001	60817-053	60817-102	20817-368	–
160	2.5	–	60817-076	–	–	–	–	–
180	2	–	–	60817-026	–	–	–	–
220	2	–	60817-149	60817-016	60817-083	60817-085	20817-369	–
220	2.5	–	–	–	–	60817-098	–	–
280	2	–	–	–	–	60817-080	–	–
340	2	–	–	–	–	–	–	20825-120
400	2	–	–	–	–	–	–	20825-121
		1) SPQ (standard pack quantity): Part number includes 1 piece, but delivery is exclusively made in standard pack quantity (SPQ); please order at least the SPQ quantity or a multiple						
Accessories								
Spring clip PPE, UL 94 V-0, red, PU 10 pieces				21100-553	21100-553	–	–	–
Spring clip PPE, UL 94 V-0, red, PU 100 pieces				21100-554	21100-554	–	–	–
Assembly parts for 50 guide rails PU (100 screws, 100 nuts)				–	21101-990	–	–	21101-990

Note

- For a detailed description of the guide rails see our website; please enter part number in "oneclick" search

19" chassis – inpac

PCB handle A

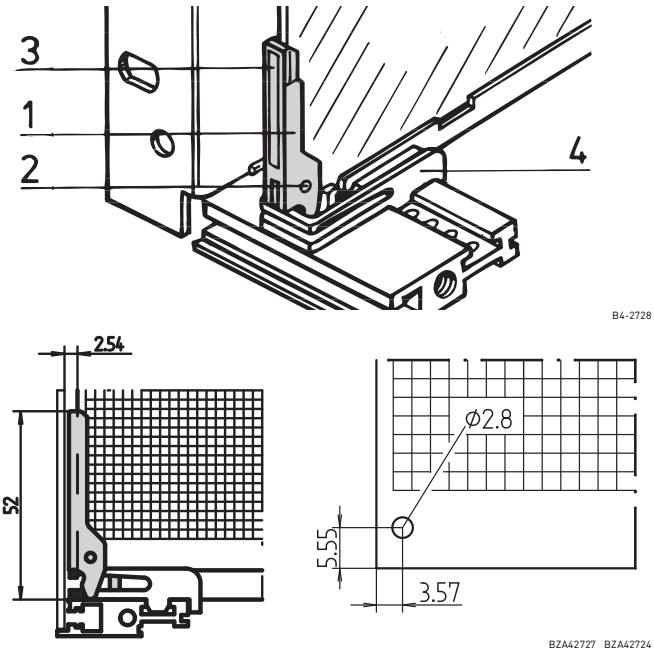

- To be mounted behind front panel, for PCB thickness 1.6 mm
- Insertion and extraction function
- Can be labelled

Order Information

Item	Description	Material	Colour	Qty/PU	Part no.
1	PCB handle A	PBT, UL 94 V-0	red	1 piece (SPQ 10)	**60817-096**
2	Pivot pin DIN 7	Stainless steel	–	100	**21100-671**
3	Identification strip	Polyester film, self-adhesive	matt-silver	100	**21100-672**

SPQ (Standard Pack Quantity): Part number includes 1 piece, but delivery is exclusively made in standard pack quantity: Please order at least 10 pieces PCB handles or a multiple

PCB retainer A

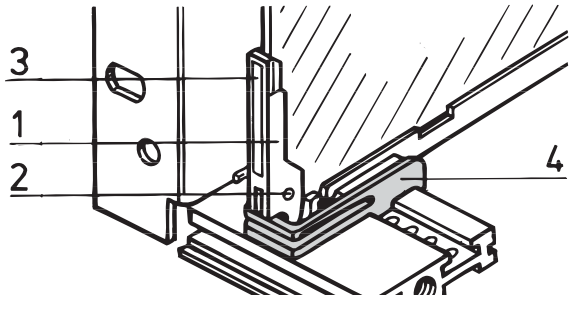

- Can also be used without PCB handle
- Application on top and bottom horizontal rail

Order Information

Item	Description	Material	Colour	Qty	Part no.
4	PCB retainer A for top and bottom	PPE, UL 94 V-0	red	1 piece (SPQ 10)	**60817-097**

SPQ (Standard Pack Quantity): Part number includes 1 piece, but delivery is exclusively made in Standard Pack Quantity: Please order at least 10 pieces PCB retainers or a multiple

PCB retainer B

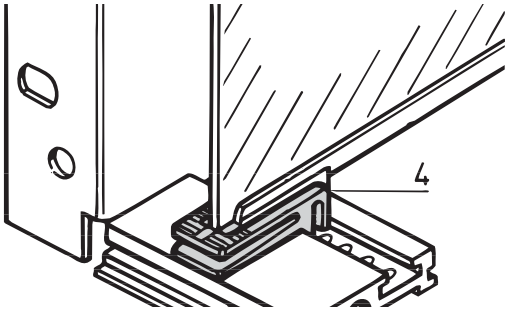

- Can be used on upper and lower horizontal rail, for PCB thickness 1.6 mm
- Can also be used without PCB handle
- Can also be used with guide blocks

Order Information

Item	Description	Material	Colour	Qty	Part no.
4	PCB retainer,bottom	PPE, UL 9 4 V-0	red	1 piece (SPQ 10)	**60817-054**
4a	PCB securing top	PPE, UL 9 4 V-0	black	1 piece (SPQ 10)	**60817-071**

SPQ (Standard Pack Quantity): Part number includes 1 piece, but delivery is exclusively made in Standard Pack Quantity: Please order at least 10 pieces PCB retainers or a multiple

Dimensions

19" front frame

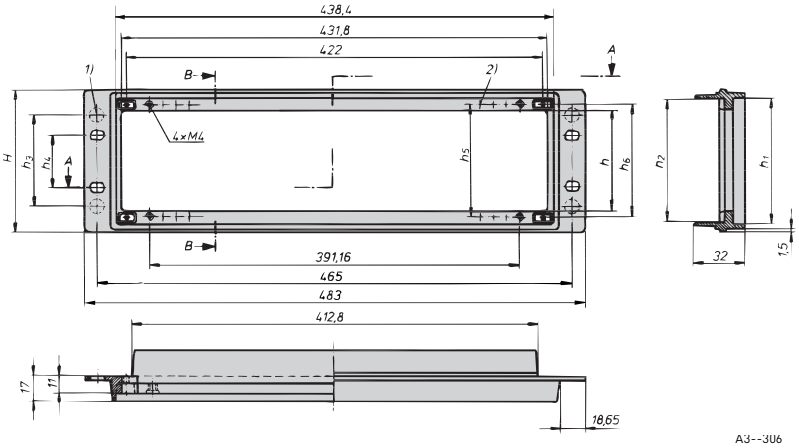

Section A-A

There are counterbores at the rear side of the front frame which can be drilled if required:
1) For handle mounting
2) For mounting of partial-width front panel (grid 5.08 mm)

19" rear frame

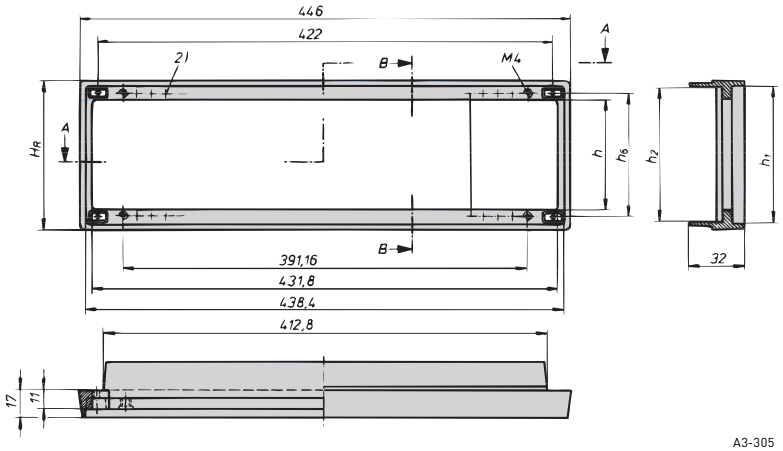

Section A-A

Dimensions table

Height in U	H	H_R	h	h_1	h_2	h_3	h_4	h_5	h_6	h_7
2	88,0	86,0	57,5	77,3	69,8	25,0	76.2	65,5	68,0	68,4
3	132.5	130.5	102.5	121.8	114.3	90,0	57.1	110.0	112,5	112.8
4	177.0	175.0	146.5	166.3	158.8	134.5	101.6	154.5	157,0	157.3
6	265.9	263.9	235.4	255.2	247.7	233.4	190.4	243.4	245,9	245,9

19" chassis – inpac

Dimensions

Side panel

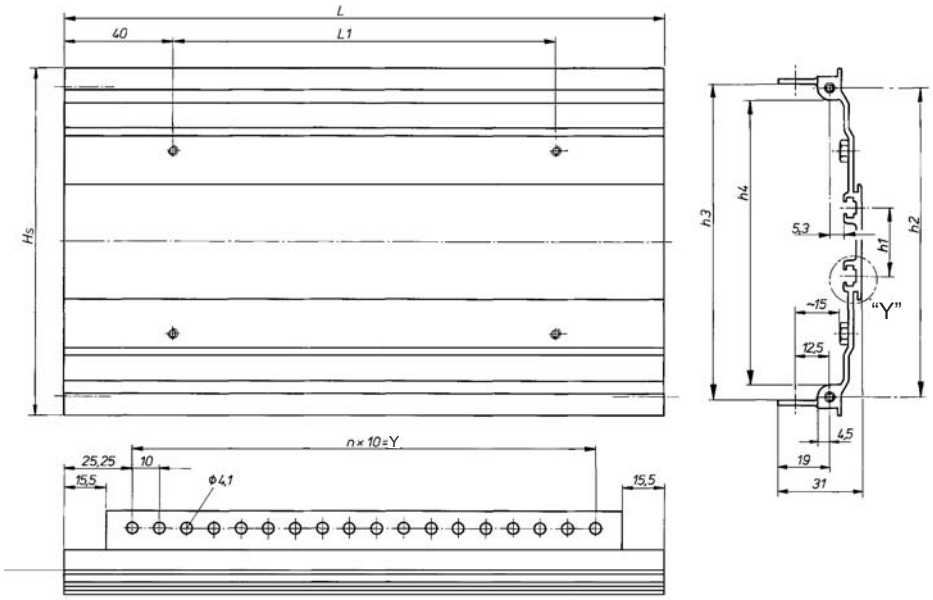

A3--304a

Detail "Y"

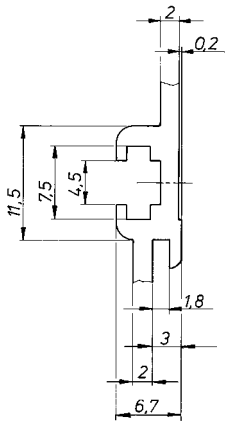

A3--304b

Dimensions table

Height in U	H	h_1	h_2	h_3	h_4	L	L_1	(n)	Y	T
2	82,6	–	68,0	71,4	59,0	220,5	140,5	17,0	170	254,5
2	82,6	–	68,0	71,4	59,0	280,5	200,5	23,0	230	314,5
2	82,6	–	68,0	71,4	59,0	340,5	260,5	29,0	290	374,5
3	127.0	24,0	112,5	115,8	103,5	220,5	140,5	17,0	170	254,5
3	127.0	24,0	112,5	115,8	103,5	280,5	200,5	23,0	230	314,5
3	127.0	24,0	112,5	115,8	103,5	340,5	260,5	29,0	290	374,5
4	171,0	68,5	157,0	160,3	148,0	220,5	140,5	17,0	170	254,5
4	171,0	68,5	157,0	160,3	148,0	280,5	200,5	23,0	230	314,5
4	171,0	68,5	157,0	160,3	148,0	340,5	260,5	29,0	290	374,5
6	260,4	157,1	245,9	248,9	236,5	220,5	140,5	17,0	170	254,5
6	260,4	157,1	245,9	248,9	236,5	280,5	200,5	23,0	230	314,5
6	260,4	157,1	245,9	248,9	236,5	340,5	260,5	29,0	290	374,5

Cabinets 1

Wall mounted cases 2

Accessories for cabinets and wall mounted cases . 3

Climate control . 4

Electronics cases 5

Subracks/ 19" chassis 6

Front panels, plug-in units . . . 7

Systems 8

Power supply units 9

Backplanes . . . 10

Connectors, front panel component system 11

Appendix 12

Front panels

- Extensive standard range
- Individual modification to customer requirements: drill holes, cut-outs
- Individual printing
- Front Panel Express

Plug-in units

- Front panels with handles in various designs
  - Extensive standard range
  - Individual modification to customer requirements: drill holes, cut-outs
  - Individual printing
  - Front Panel Express

36106003 (09292001 04612001)

Front panels, plug-in units, frame-type plug-in units

Overview 7.0
Front panels .. 7.2
Plug-in units .. 7.16
Frame type plug-in units .. 7.64
minipac 7.98
PCB accessories ... 7.102
Assembly material 7.107
Modules to mount drive units
see chapter System Accessories .. 8.110

Frame-type plug-in units

- To hold and protect PCBs
- High stability
- Outstanding cooling
- With or without EMC shielding

minipac

- Convenient small case - flexible enough for all your requirements
- To accommodate non-standardised or standardised PCBs
- As desktop enclosure, for wall mounting or mounting on a DIN support rail

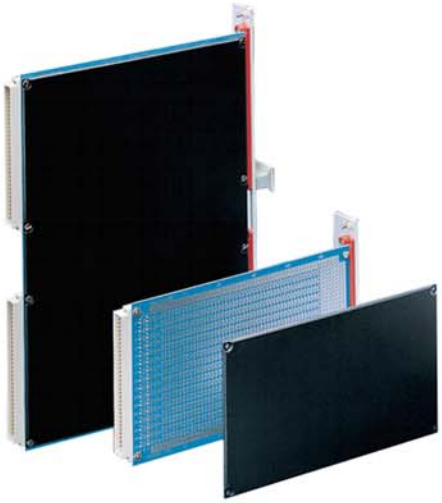

Accessories

- Brackets, handles, covers
- Assembly material
- Tools

36106004 (04802002 04812001 11092008 04995001)

Content

Cabinets 1

Wall mounted cases 2

Accessories for cabinets and wall mounted cases . 3

Climate control . 4

Electronics cases 5

Subracks/ 19" chassis 6

Front panels, plug-in units . . . 7

Systems 8

Power supply units 9

Backplanes . . . 10

Connectors, front panel component system 11

Appendix 12

Front panels

04292001

Standards

- IEC 60297-3-101/IEEE 1101.1/10

30407004

ServicePLUS

e.g. individual colouring
e.g. customised cut-outs
e.g. printing
e.g. mounting service
e.g. special dimensions

www.frontpanelexpress.eu

FRONT PANEL EXPRESS

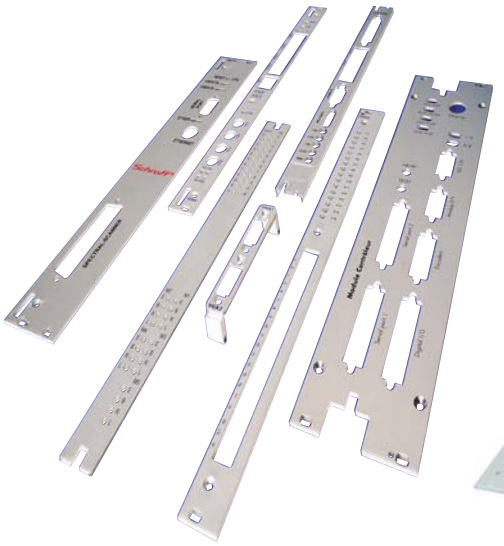

32304003

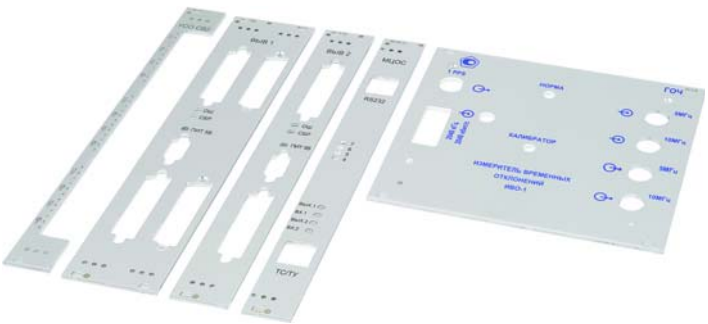

04210001 04603009

Front panels

Overview 7.2

Front panels for fitting in subracks, cases and systems

- Extensive standard range with various finishes and materials (aluminium or stainless steel)
- Front Panel Express:
  Fast delivery service of customised versions (from 2 days)
- EMC shielding retrofittable

04292001

Front panels, unshielded

- Aluminium, clear anodised
- Aluminium, clear pre-anodised, cut edge untreated
- Aluminium, front anodised, rear iridescent green chromated
- Other finishes on request

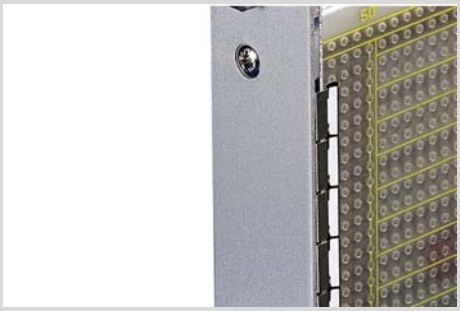

04600006

Front panels shieldable, flat

- With lateral grooves to fit EMC gaskets (stainless steel)
- Compatible with the shielded U profile version

04602004

Front panels, shieldable, U profile

- With lateral groove to fix a textile self-adhesive EMC gasket
- Compatible with the shielded flat version
- High robustness through U profile

04295001 04295002

Further front panels

- Hinged/folding front panels
- Front panels with GND/earthing
- Mezzanine front panels
- AdvancedTCA front panels
- MicroTCA front panels
- AdvancedMC front panels

Front panels
Unshielded 7.4
Shieldable 7.5
EMC stainless steel gaskets 7.6
Assembly tool 7.6

Front panels
Shieldable (U profile) 7.7
EMC textile gasket 7.6

Further front panels
Hinged 7.8
Hinged, shielded . 7.9
For D-Sub connectors 7.10
For Coax connectors 7.11
3 U with GND/ earthing 7.11
Mezzanine front panels 7.12

Assembly kit 7.107
AdvancedTCA front panels 8.12
MicroTCA front panels 8.65
AdvancedMC front panels 8.60

Front panels

Front panels, unshielded

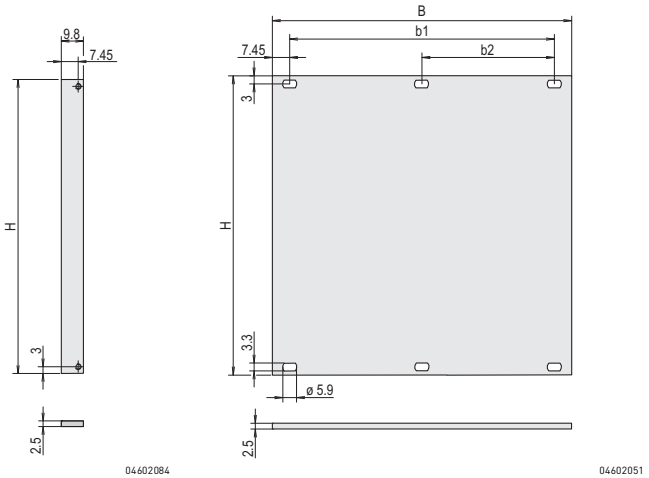

2 HP > 2 HP

- Front panel, Al, 2.5 mm
- Versions:
  - Al, anodised
  - Al, anodised, cut edges plain
  - Al, front anodised, rear iridescent green chromated

Note

- Other sizes and finishes available on request
- Please order fixing material separately, see chapter Assemply parts, page 7.107

Order Information

Height	H	Width	B	b1	b2	Qty 1)	Anodised, cut edges plain	Anodised	Front anodised, rear colorless chromated
U	mm	HP	mm	mm	mm		Part no.	Part no.	Part no.
1	39.5	84	426.4	411.5	203.2	1	–	–	20850-426
2	84.0	84	426.4	411.5	203.2	1	30818-271	30807-416	30847-461
3	128.4	2	9.8	–	–	1 (SPQ 5)[1]	30810-433	30810-432	30847-470
3	128.4	3	14.9	–	–	1 (SPQ 5)[1]	30818-272	30807-508	30847-471
3	128.4	4	20.0	–	–	1 (SPQ 5)[1]	30818-273	30807-481	30838-043
3	128.4	5	25.0	–	–	1 (SPQ 5)[1]	30818-274	30807-510	30838-044
3	128.4	6	30.1	–	–	1 (SPQ 5)[1]	30818-275	30807-482	30838-045
3	128.4	7	35.2	–	–	1 (SPQ 5)[1]	30818-276	30807-509	30838-046
3	128.4	8	40.3	25.4 [2]	–	1 (SPQ 5)[1]	30818-277	30807-484	30838-047
3	128.4	10	50.5	35.6	–	1 (SPQ 5)[1]	30818-279	30807-483	30838-049
3	128.4	12	60.6	45.7	–	1 (SPQ 5)[1]	30818-281	30807-485	30838-051
3	128.4	14	70.8	55.9	–	1 (SPQ 5)[1]	30818-282	30807-501	30838-053
3	128.4	21	106.3	91.4	–	1 (SPQ 5)[1]	30818-289	30807-487	30838-060
3	128.4	28	141.9	127.0	–	1 (SPQ 5)[1]	30818-296	30807-496	30838-067
3	128.4	42	213.0	198.1	101.6 [2]	1	30818-310	30807-494	30838-081
3	128.4	63	319.7	304.8	157.5	1	30818-331	30808-067	30838-102
3	128.4	84	426.4	411.5	203.2	1	30818-352	30807-506	30838-123
4	172.9	84	426.4	411.5	203.2	1	30818-434	30807-596	30847-465
6	261.8	2	9.8	–	–	1 (SPQ 5)[1]	30818-747	30818-741	30847-472
6	261.8	4	20.0	–	–	1 (SPQ 5)[1]	30818-518	30807-778	30838-124
6	261.8	5	25.0	–	–	1 (SPQ 5)[1]	30818-519	30807-777	30838-125
6	261.8	6	30.1	–	–	1 (SPQ 5)[1]	30818-520	30807-752	30838-126
6	261.8	7	35.2	–	–	1 (SPQ 5)[1]	30818-521	–	30838-127
6	261.8	8	40.3	25.4 [2]	–	1 (SPQ 5)[1]	30818-522	30807-779	30838-128
6	261.8	10	50.5	35.6	–	1 (SPQ 5)[1]	30818-524	30807-753	30838-130
6	261.8	12	60.6	45.7	–	1 (SPQ 5)[1]	30818-526	30807-755	30838-132
6	261.8	14	70.8	55.9	–	1 (SPQ 5)[1]	30818-528	30807-758	30838-134
6	261.8	16	80.9	66.0	–	1 (SPQ 5)[1]	30818-530	30807-780	30838-136
6	261.8	21	106.3	91.4	–	1 (SPQ 5)[1]	30818-535	30807-757	30838-141
6	261.8	28	141.9	127.0	–	1 (SPQ 5)[1]	30818-542	30807-766	30838-148
6	261.8	42	213.0	198.1	101.6 [2]	1	30818-556	30807-764	30838-162
6	261.8	63	319.7	304.8	157.5	1	30818-577	30807-771	30838-183
6	261.8	84	426.4	411.5	203.2	1	30818-598	30807-776	30838-204
9	395.1	84	426.4	411.5	203.2	1	–	–	30847-556

1) SPQ (standard pack quantity): Part number includes 1 piece, but delivery is exclusively made in standard pack quantity (SPQ); please order at least the SPQ quantity or a multiple

2) This dimension is only available for "front anodised, rear iridescent green chromated" version

- Please order fixing material (sleeves, collar screws) separately, see page 7.107

Front panels

Front panels, shieldable

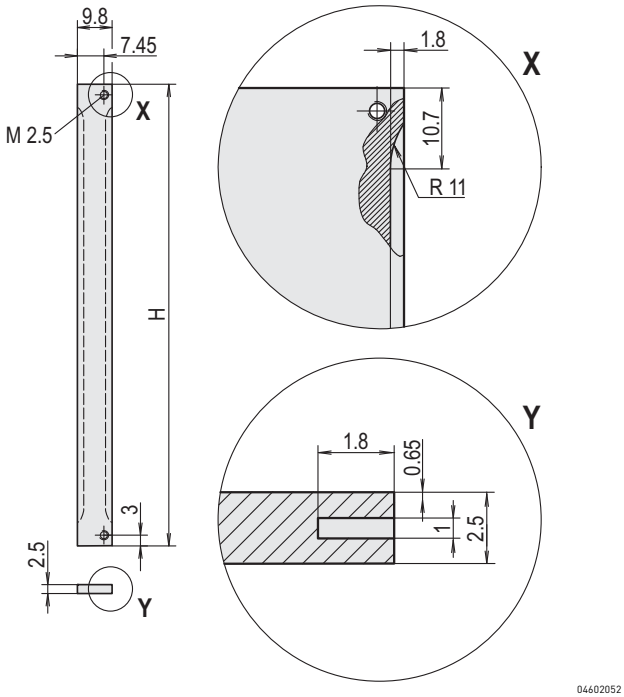

2 HP

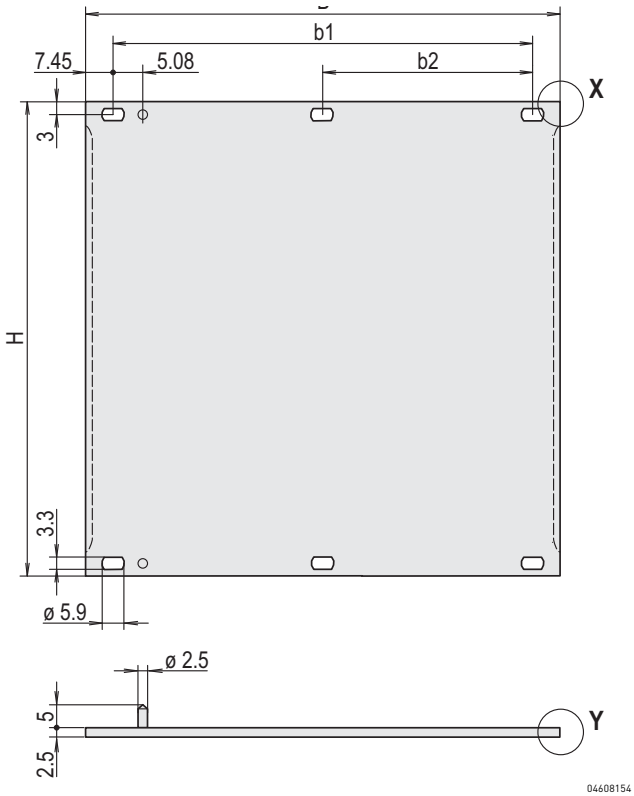

> 2 HP

- Front panel, Al, 2.5 mm, front anodised, rear iridescent green chromated, 2 alignment pins pressed-in, stainless steel
- Shielding with stainless steel EMC gasket

Order Information

Height H U	mm	Width HP	B mm	b1 mm	b2 mm	Align-ment pin	Qty	Part no.
2	84	84	426.4	411.5	203.2	–	1	**30846-588**
3	128.4	2	9.8	–	–	–	1 (SPQ 5)[1)]	**30846-864**
3	128.4	3	14.9	–	–	x	1 (SPQ 5)[1)]	**20846-425**
3	128.4	4	20	–	–	x	1 (SPQ 5)[1)]	**20846-426**
3	128.4	5	25	–	–	x	1 (SPQ 5)[1)]	**20846-427**
3	128.4	6	30.1	–	–	x	1 (SPQ 5)[1)]	**20846-428**
3	128.4	7	35.2	–	–	x	1 (SPQ 5)[1)]	**20846-429**
3	128.4	8	40.3	25.4	–	x	1 (SPQ 5)[1)]	**20846-430**
3	128.4	10	50.5	35.6	–	x	1 (SPQ 5)[1)]	**20846-431**
3	128.4	12	60.6	45.7	–	x	1 (SPQ 5)[1)]	**20846-432**
3	128.4	14	70.8	55.9	–	x	1 (SPQ 5)[1)]	**20846-433**
3	128.4	21	106.3	91.4	–	x	1 (SPQ 5)[1)]	**20846-434**
3	128.4	28	141.9	127	–	x	1 (SPQ 5)[1)]	**20846-436**
3	128.4	42	213	198.1	101.6	x	1	**20846-437**
3	128.4	63	319.7	304.8	157.5	x	1	**20846-438**
3	128.4	84	426.4	411.5	203.2	–	1	**30846-676**
4	172.9	84	426.4	411.5	203.2	–	1	**30846-683**
6	261.8	2	9.8	–	–	–	1 (SPQ 5)[1)]	**30846-865**
6	261.8	4	20	–	–	x	1 (SPQ 5)[1)]	**20846-443**
6	261.8	5	25	–	–	x	1 (SPQ 5)[1)]	**20846-444**
6	261.8	6	30.1	–	–	x	1 (SPQ 5)[1)]	**20846-445**
6	261.8	7	35.2	–	–	x	1 (SPQ 5)[1)]	**20846-446**
6	261.8	8	40.3	25.4	–	x	1 (SPQ 5)[1)]	**20846-447**
6	261.8	10	50.5	35.6	–	x	1 (SPQ 5)[1)]	**20846-448**
6	261.8	12	60.6	45.7	–	x	1 (SPQ 5)[1)]	**20846-449**
6	261.8	14	70.8	55.9	–	x	1 (SPQ 5)[1)]	**20846-450**
6	261.8	16	80.9	66	–	x	1 (SPQ 5)[1)]	**20846-456**
6	261.8	21	106.3	91.4	–	x	1 (SPQ 5)[1)]	**20846-451**
6	261.8	28	141.9	127	–	x	1 (SPQ 5)[1)]	**20846-452**
6	261.8	42	213	198.1	101.6	x	1	**20846-453**
6	261.8	63	319.7	304.8	157.5	x	1	**20846-454**
6	261.8	84	426.4	411.5	203.2	–	1	**30846-771**
9	395.1	84	426.4	411.5	203.2	–	1	**30846-859**

Delivery is exclusively made in Standard Pack Quantity (SPQ):
Please order at least 5 pieces or a multiple.
Pricing is per individual item.

Note

- Please order fixing material (sleeves, collar screws) separately, see page 7.107
- Please order stainless steel EMC gasket separately, see page 7.6

Front panels

Stainless steel EMC gasket

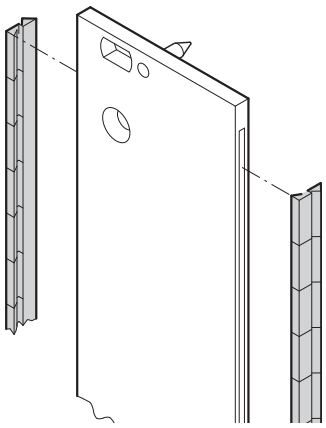

bga45760

Montagewerkzeug

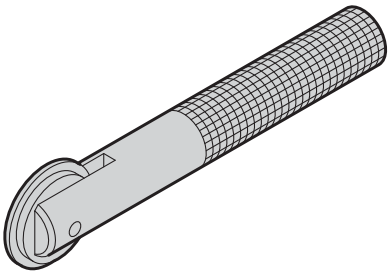

aza45937

- The stainless steel EMC gaskets are inserted into the lateral slots of the shieldable front panels (2 pieces per front panel)

Delivery comprises

Item	Qty	Description
1	10/100	EMC gasket (stainless steel)

Order Information

Height U	Height mm	Qty/PU	Part no.
2	52	10	**21101-775**
3	97	10	**21101-705**
3	97	100	**21101-706**
4	142	10	**21101-713**
4	142	100	**21101-714**
5	187	10	21101-777
5	187	100	21101-778
6	232	10	**21101-707**
6	232	100	**21101-708**
9	367	10	**21101-709**
9	367	100	**21101-710**
Assembly tool for EMC gasket (stainless steel), 1 piece			**24560-270**

Note

- Please order assembly tool separately

Textile EMC gasket

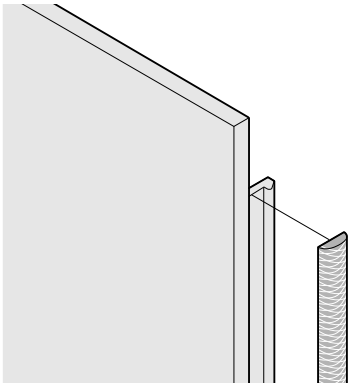

04602054

- Textile EMC gasket is glued laterally on the front panel, in the groove of the right-hand profile
- 2 temperature ranges
  - Temperature range -40... +70 °C
  - Temperature range -40... +85 °C

Delivery includes

Item	Qty	Description
1	see Order Information	EMC textile gasket, core: TPE foam (-40... +70 °C), Core: silicon with hollow chamber (-40... +85 °C), sleeve: textile cladding with CuNi coating

Order Information

Height U	Height mm	Qty/PU piece	Part no. Temperature range -40... +70 °C	Part no. Temperature range -40... +85 °C
2	52	10	**21101-857**	**21102-857**
3	97	10	**21101-853**	**21102-853**
3	97	100	**21101-854**	**21102-854**
4	142	10	**21101-858**	**21102-858**
5	187	10	**21101-978**	**21102-978**
6	232	10	**21101-855**	**21102-855**
6	232	100	**21101-856**	**21102-856**
9	365	10	**21101-859**	**21102-859**
9	365	100	**21101-904**	–

EMC characteristic (typical, green)
B1 (red): -40 ... -70 °C, B2 (blue): -40 ... -85 °C

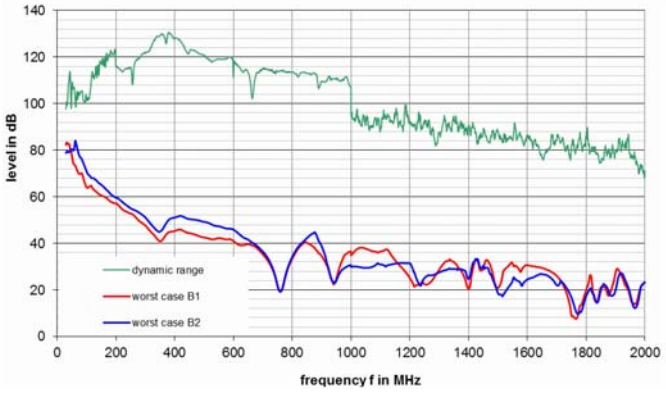

04614052

Front panels

Front panels, U profile, shieldable

2 HP

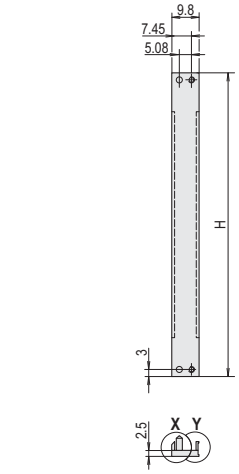

3 U

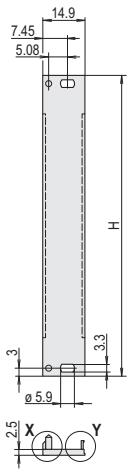

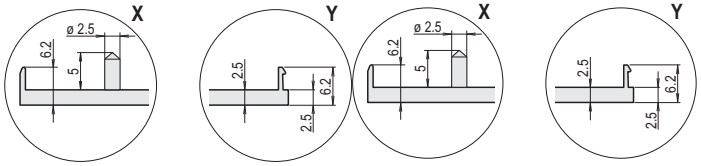

04608155 04608158

> 3 HP

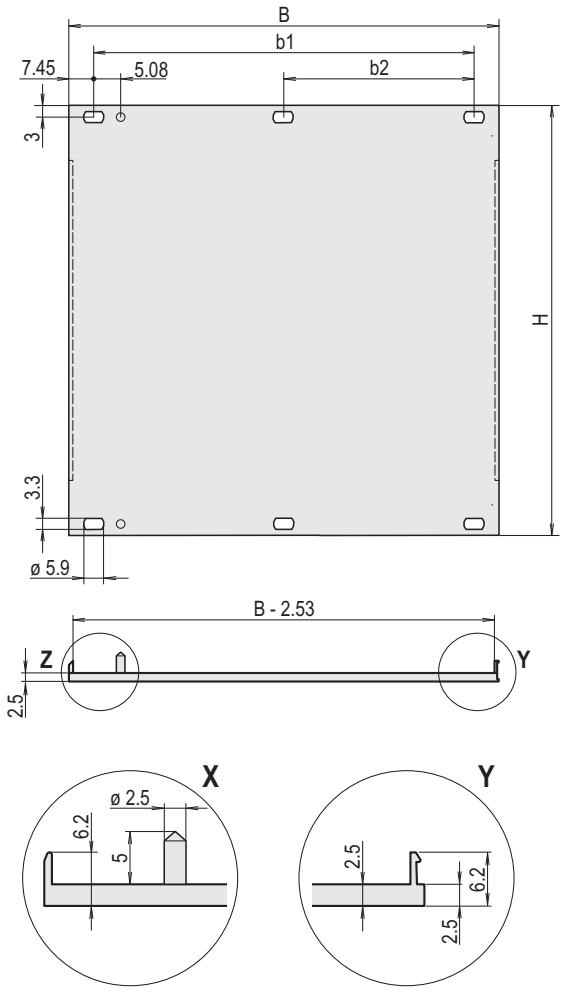

04608156

- High stability through U profile
- Front panel, U profile, Al, front anodised, rear conductive, 2 alignment pins pressed-in, stainless steel
- Differerences in the finish between 2 ... 12 HP and 14 ... 84 HP

Order Information

Height H U	mm	Width HP	B mm	b1 mm	b2 mm	Align-ment pin	Qty	Part no.
2	84	84	426.4	411.5	203.2	–	1 (SPQ 5)1)	**20848-262**
3	128.4	2	9.8	–	–	x	1 (SPQ 5)1)	**30849-001**
3	128.4	3	14.9	–	–	x	1 (SPQ 5)1)	**30849-004**
3	128.4	4	20	–	–	x	1 (SPQ 5)1)	**30848-354**
3	128.4	5	25	–	–	x	1 (SPQ 5)1)	**30848-378**
3	128.4	6	30.1	–	–	x	1 (SPQ 5)1)	**30848-380**
3	128.4	7	35.2	–	–	x	1 (SPQ 5)1)	**30848-382**
3	128.4	8	40.3	25.4	–	x	1 (SPQ 5)1)	**30848-356**
3	128.4	10	50.5	35.6	–	x	1 (SPQ 5)1)	**30848-386**
3	128.4	12	60.6	45.7	–	x	1 (SPQ 5)1)	**30848-358**
3	128.4	14	70.8	55.9	–	x	1 (SPQ 5)1)	**20848-013**
3	128.4	16	80.9	66	–	x	1 (SPQ 5)1)	**20848-015**
3	128.4	21	106.3	91.4	–	x	1 (SPQ 5)1)	**20848-020**
3	128.4	28	141.9	127	–	x	1 (SPQ 5)1)	**20848-027**
3	128.4	42	213	198.1	101.6	x	1	**20848-047**
3	128.4	63	319.7	304.8	157.5	x	1	**20848-068**
3	128.4	84	426.4	411.5	203.2	–	1	**20848-097**
4	172.9	84	426.4	411.5	203.2	–	1	**20848-271**
6	261.8	2	9.8	–	–	x	1 (SPQ 5)1)	**30849-002**
6	261.8	4	20	–	–	x	1 (SPQ 5)1)	**30848-355**
6	261.8	5	25	–	–	x	1 (SPQ 5)1)	**30848-379**
6	261.8	6	30.1	–	–	x	1 (SPQ 5)1)	**30848-381**
6	261.8	7	35.2	–	–	x	1 (SPQ 5)1)	**30848-383**
6	261.8	8	40.3	25.4	–	x	1 (SPQ 5)1)	**30848-357**
6	261.8	10	50.5	35.6	–	x	1 (SPQ 5)1)	**30848-387**
6	261.8	12	60.6	45.7	–	x	1 (SPQ 5)1)	**30848-359**
6	261.8	14	70.8	55.9	–	x	1 (SPQ 5)1)	**20848-106**
6	261.8	16	80.9	66	–	x	1 (SPQ 5)1)	**20848-108**
6	261.8	21	106.3	91.4	–	x	1 (SPQ 5)1)	**20848-113**
6	261.8	28	141.9	127	–	x	1 (SPQ 5)1)	**20848-120**
6	261.8	42	213	198.1	101.6	x	1	**20848-139**
6	261.8	63	319.7	304.8	157.5	x	1	**20848-160**
6	261.8	84	426.4	411.5	208.3	–	1	**20848-189**
9	395.1	84	426.4	411.5	203.2	–	1	**20848-280**

1) Delivery is exclusively made in Standard Pack Quantity (SPQ): Please order at least 5 pieces or a multiple.
Pricing is per individual item.

Note

- Differences in finish between 2 ... 12 HP and 14 ... 84 HP
  - 2 ... 12 HP: one-part U-profile
  - 14 ... 84 HP: multi-part U-profile (front panel with crimped profiles)
- Please order fixing material (sleeves, collar screws) separately, see page 7.107
- Please order textile EMC gasket separately, see page 7.6

Front panels

Front panels, bottom-hinged

04295001

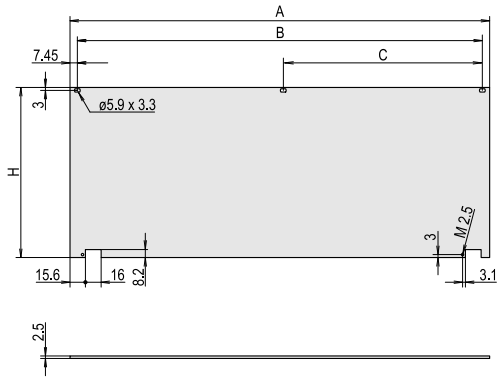

04602080

Unshielded

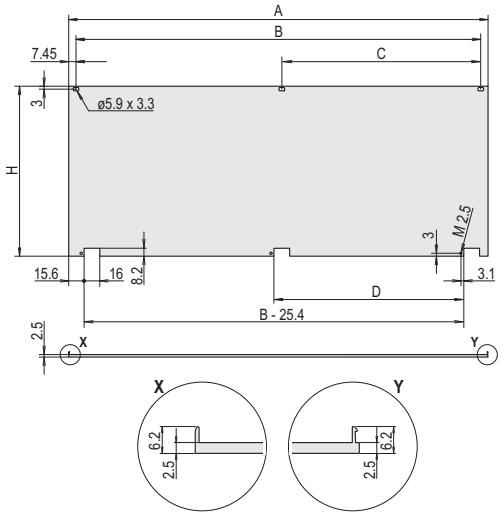

04602079

Shielded

- Suitable for subracks (europacPRO) and cases (ratiopacPRO, propacPRO, compacPRO)
- Front panel can be unhinged at 135° (not ratiopacPRO) opening angle
- The useable width is not restricted
- Mounts on the horizontal rails
- 2 versions:
  - unshielded
  - shielded, U front panel with textile EMC gasket

Delivery comprises (kit)

Item	Qty		Description
	Unshielded	Shielded	
1	1	-	Front panel, hinged, Al, 2.5 mm, anodised, cut edges plain
1a	-	1	Front panel, U profile, hinged, Al, 2.5 mm, front anodised, rear iridescent green chromated
2	2	3	Hinge, Zn die-cast, nickel-plated
3	2	3	Sleeve, PA
4	2	3	Knurled screw M2.5 x 12.3, nickel-plated
5	-	1	EMC textile gasket, core: foam, sleeve: textile cladding with CuNi coating
6	1	1	Assembly kit

Note

- Unshielded: Dimension C for 84 HP only

Order Information

Dimensions							Shielded	Unshielded
Height	Width	A	B	C	D	H	Part no.	Part no.
U	HP	mm	mm	mm	mm	mm		
3	28	141.9	127.0	–	–	128.4	**20848-608**	**20838-280**
3	42	213.0	198.1	101.6	86.4	128.4	**20848-599**	**20838-271**
3	63	319.7	304.8	157.5	137.2	128.4	**20848-600**	**20838-272**
3	84	426.4	411.5	208.3 [1)]	193.0	128.4	**20848-601**	**20838-273**
4	42	213.0	198.1	101.6	86.4	172.9	**20848-605**	**20838-277**
4	63	319.7	304.8	157.5	137.2	172.9	**20848-606**	**20838-278**
4	84	426.4	411.5	208.3 [1)]	193.0	172.9	**20848-607**	**20838-279**
6	28	141.9	127.0	–	–	261.8	**20848-696**	**–**
6	42	213.0	198.1	101.6	86.4	261.8	**20848-602**	**20838-274**
6	63	319.7	304.8	157.5	137.2	261.8	**20848-603**	**20838-275**
6	84	426.4	411.5	208.3 [1)]	193.0	261.8	**20848-604**	**20838-276**

1) Dimension with unshielded front panel

Front panels

Front panel, hinged, shielded

04295002

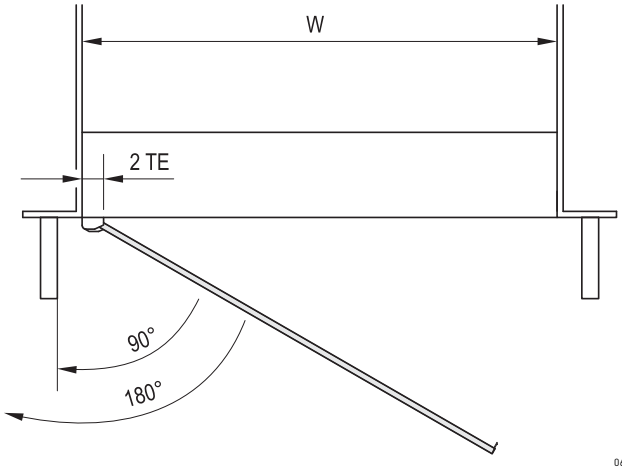

06106053

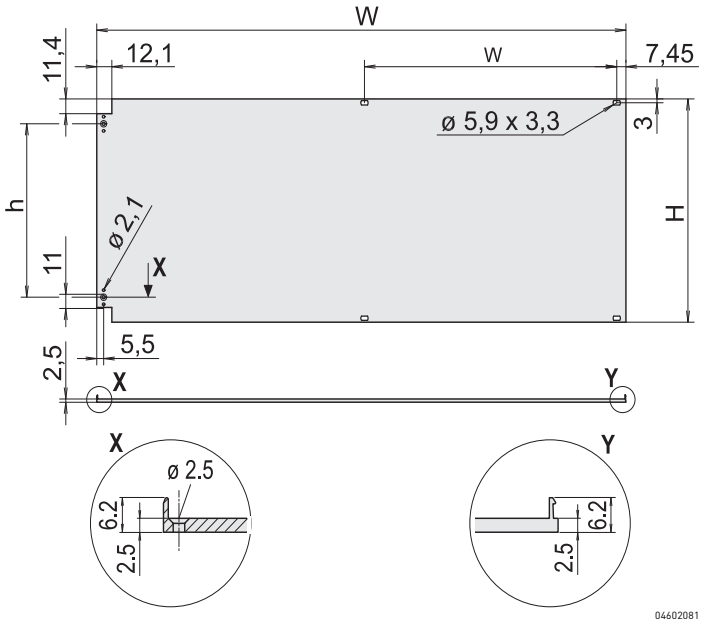

04602081

- Suitable for subracks (europacPRO) and cases (ratiopacPRO, propacPRO, compacPRO)
- Mounts on horizontal rails
- Front panel with textile EMC gasket
- Hinges can be fitted on left or right

Delivery comprises (kit)

Item	Qty	Description
1	1	Front panel, hinged, Al, 2.5 mm, front anodised, rear iridescent green chromated
2	2	Hinge, Zn die-cast, chrome-plated
3	1	Textile EMC gasket, core: foam, sleeve: textile cladding with CuNi coating
4	1	Assembly kit

Order Information

Height U	H mm	h mm	W mm	w mm	Part no.
3	128.4	89.9	426.4	203.2	**20848-611**
6	261.8	223.2	426.4	203.2	**20848-617**

Front panels

Front panels for D-Sub connectors

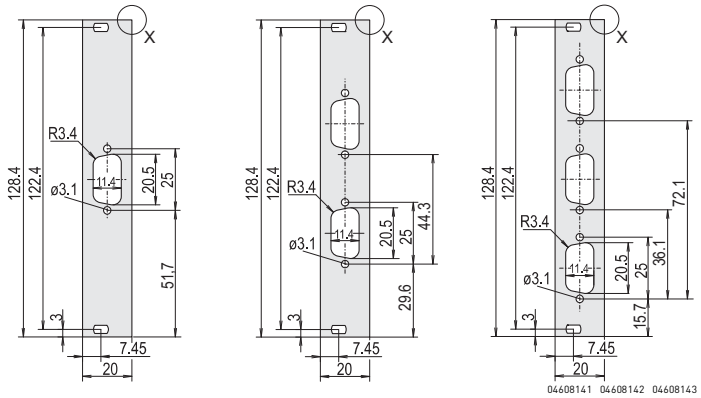

Cut-out 9-pin

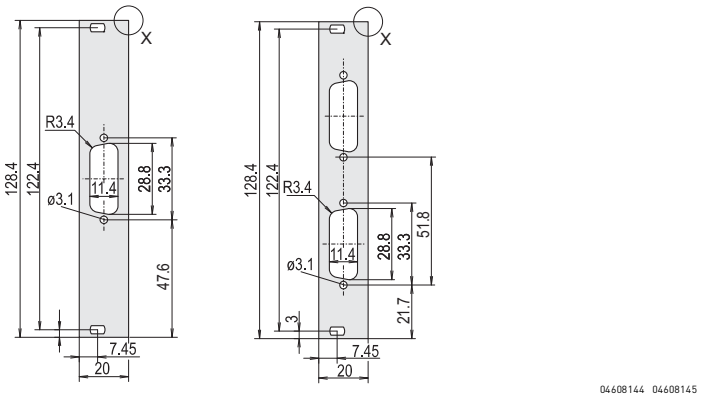

Cut-out 15-pin

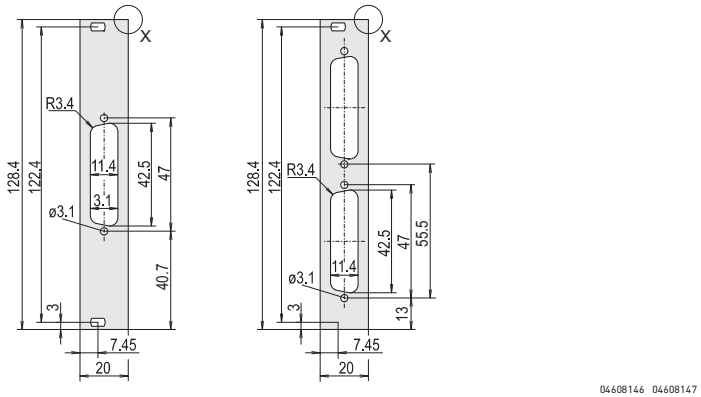

Cut-out 25-pin

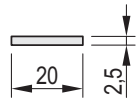

Unshielded

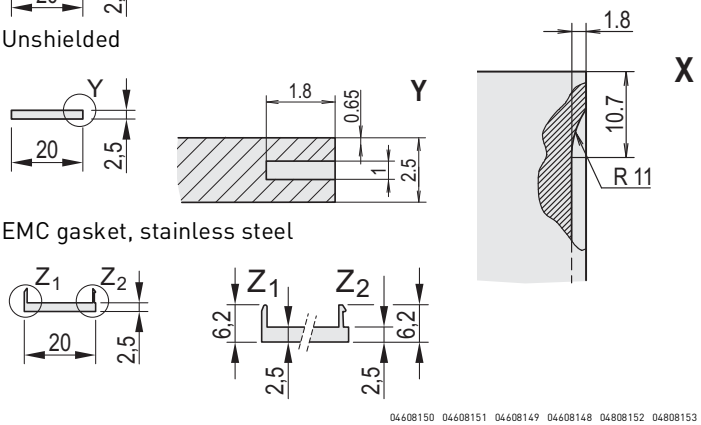

EMC gasket, stainless steel

For textile EMC gasket

- 3 U/4 HP
- Aluminium, front anodised, rear irisdescent green chromated
- Shielding through: stainless steel EMC or textile EMC gasket (please order separately)

Delivery comprises

Item	Description
1a	Front panel, Al, 2.5 mm, front anodised, rear irisdescent green chromated
1b	Front panel, Al, 2.5 mm, front anodised, rear iridescent green chromated; for EMC stainless steel gasket
1c	Front panel, U profile, Al, 2.5 mm, front anodised, rear conductive; for EMC gasket (textile)

Order Information

Cut-out	Qty	Unshielded	For EMC gasket	
			Stainless steel	Textile
		Part no. 1a	Part no. 1b	Part no. 1c
1 × 9-polig	1 piece (SPQ 5)	**30118-341**	**30118-348**	30849-749
2 × 9-polig	1 piece (SPQ 5)	**30118-344**	**30118-351**	30849-750
3 × 9-polig	1 piece (SPQ 5)	**30118-347**	30118-354	30849-751
1 × 15-polig	1 piece (SPQ 5)	**30118-342**	**30118-349**	30849-752
2 × 15-polig	1 piece (SPQ 5)	**30118-345**	30118-352	30849-753
1 × 25-polig	1 piece (SPQ 5)	**30118-343**	30118-350	30849-754
2 × 25-polig	1 piece (SPQ 5)	**30118-346**	30118-353	30849-755

Delivery is exclusively made in Standard Pack Quantity (SPQ):
Please order at least 5 pieces or a multiple.
Pricing is per individual item.

Note

- Please order fixing material (sleeves, collar screws) separately, see page 7.107
- Please order stainless steel EMC gasket separately, see page 7.6
- Please order textile EMC gasket separately, see page 7.6

Front panels

Front panels for Coax connectors

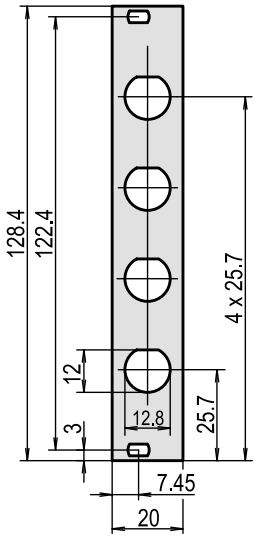

- 3 U/4 HP
- Aluminium, 2.5 mm, front anodised, rear irisdescent green chromated

Order Information

Description	Qty/PU	Part no.
Cut-out 4 x Coax, unshielded	1	**30118-355**

Note

- Please order fixing material (sleeves, collar screws) separately, see page 7.107

Front panels 3 U with GND/earthing connection

- Earthed front panel (protection class 1)

Delivery comprises (items 1 – 3 assembled)

Item	Qty	Description
1	1	Front panel 3 U, Al, 2.5 mm, front anodised, rear iridescent green chromated with GND/earthing connection
2	4	Plastic sleeve, PA, grey
3	4	Collar screws, M2.5 x 11 and 12.3 Pozidrive, St, nickel-plated
4	1	GND/earthing kit, length of GND/earthing cable 320 mm

Order Information

Height U	Width HP	Qty	Part no.
3	7	1 piece (SPQ 5)	**20119-159**
3	14	1 piece (SPQ 5)	**20119-160**
3	21	1 piece (SPQ 5)	**20119-161**
3	28	1 piece (SPQ 5)	**20119-162**
3	42	1	**20119-163**

Delivery is exclusively made in Standard Pack Quantity (SPQ):
Please order at least 5 pieces or a multiple.
Pricing is per individual item.

Note

- Please order fixing material (sleeves, collar screws) separately, see page 7.107

Front panels

PMC Mezzanine front panels

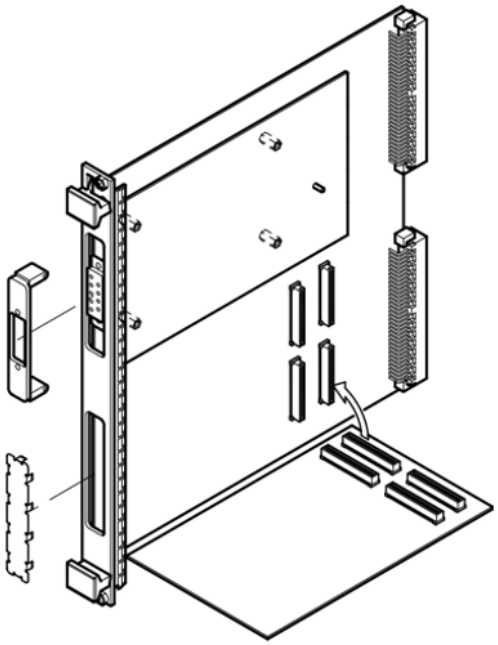

- Based on PCI 2.2 specification
  (PCI = **P**eripheral **C**omponent **I**nterface)
- In accordance with PMC mezzanine specification IEEE P 1386

PMC mezzanine front panel kit, shielded, with trapezoidal extractor handle Type 1

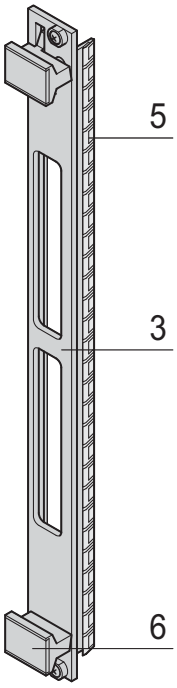

Item 3: front panel, item 5: EMC gasket, item 6: front handle

- PMC= **P**CI **M**ezzanine **C**ard
- For module size 194 x 74 mm2
- In accordance with specification IEEE P1386
  (CMC= **C**ommon **M**ezzanine **C**ard)
- 6 U/4 HP front panel with stainless steel EMC gasket and front handles

Delivery includes (assembled)

Item	Qty	Description
3	1	PMC front panel, Al extrusion, 6 U, 4 HP, clear passivated
5	1	EMC gasket (St, stainless)
6	2	Trapeziform extraxtor handle, type 1

Order Information

Item	Description	Part No.
3+5+6	Front panel with 2 cut-outs	20897-950
Accessories		
Spacer to mount PMC and FMC mezzanine boards		see page 7.15
Voltage keying/coding pin for PMC mezzanine boards		see page 7.15
PMC cover for front panel cutouts for EMC shielding, PMC gasket for mezzanine front panels		see page 7.13
PMC gasket for mezzanine front panels		see page 7.13

Front panels

PMC cutout cover for EMC protection

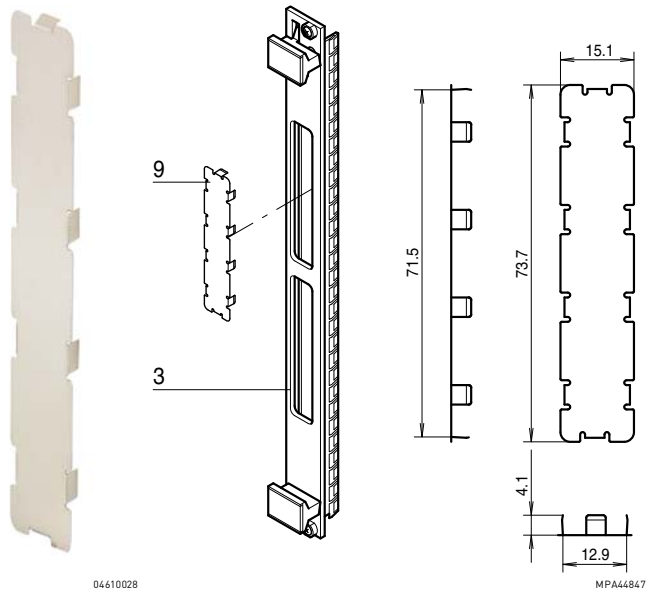

Item 9: EMC cover; Item 3: front panel

- EMC cover to close unused cut-outs in the PMC mezzanine front panels
- Material stainless steel, 0.2 mm
- Colour: black or bright

Order Information

Colour	Qty	Part no.
Black	1 piece (SPQ 10)	**60835-024**
Bright	1 piece (SPQ 10)	**60835-022**

Delivery is exclusively made in Standard Pack Quantity (SPQ): Please order at least 10 pieces or a multiple.
Pricing is per individual item.

PMC bezel for mezzanine front panels

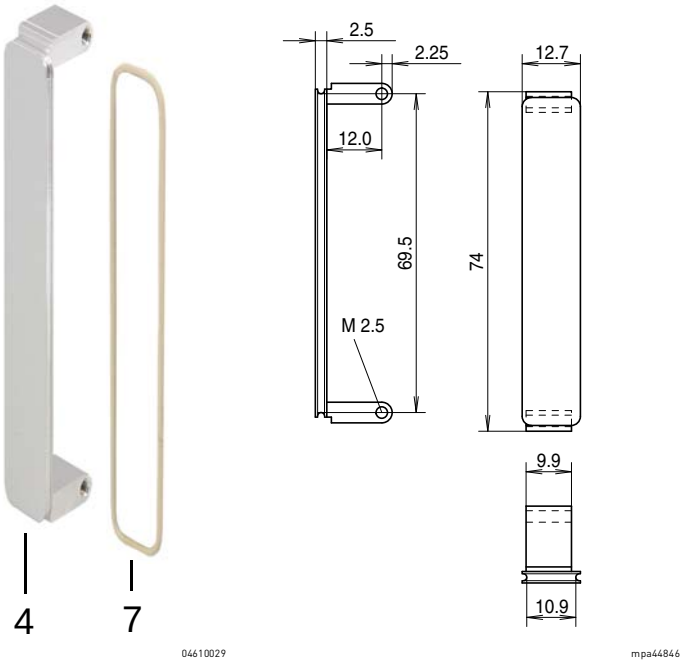

- Mezzanine front panel is fitted into PMC front panel cut-outs; EMC shielding with conductive O-ring
- Material:
  - Aluminium extrusion (anodised, contact surfaces conductive)
  - Zinc die-cast (untreated, black or chrome-plated, matt)

Delivery comprises (kit)

Item	Qty	Description
4	1	PMC bezel for mezzanine front panel, Zn die-cast or Al extrusion
7	1	EMC gasket (O-ring), Cho-Seal

Order Information

PMC mezzaninefront panel Material	Qty/PU	with EMC gasket Part no.	without EMC gasket Part no.
Al extrusion, anodised, contact surfaces conductive	1	**20835-598**	–
Al extrusion, anodised, contact surfaces conductive	10	**20835-889**	**20835-899**
Zn die-cast, untreated	1	**20835-890**	–
Zn die-cast, untreated	10	20835-893	20835-896
Zinc die-cast, black, chromated	1	**20835-922**	–
Zinc die-cast, black, chromated	10	20835-924	20835-931
Zinc die-cast, chrome-plated, matt	1	**20835-923**	–
Zinc die-cast, chrome-plated, matt	10	20835-928	20835-929
Cheesehead screw M2.5 × 5 mm, PU 100 pieces			**21100-624**
EMC gasket O-ring, 1 piece (Standard Pack Quantity 10 pieces)			**60835-021**

Front panels

FMC mezzanine front panels

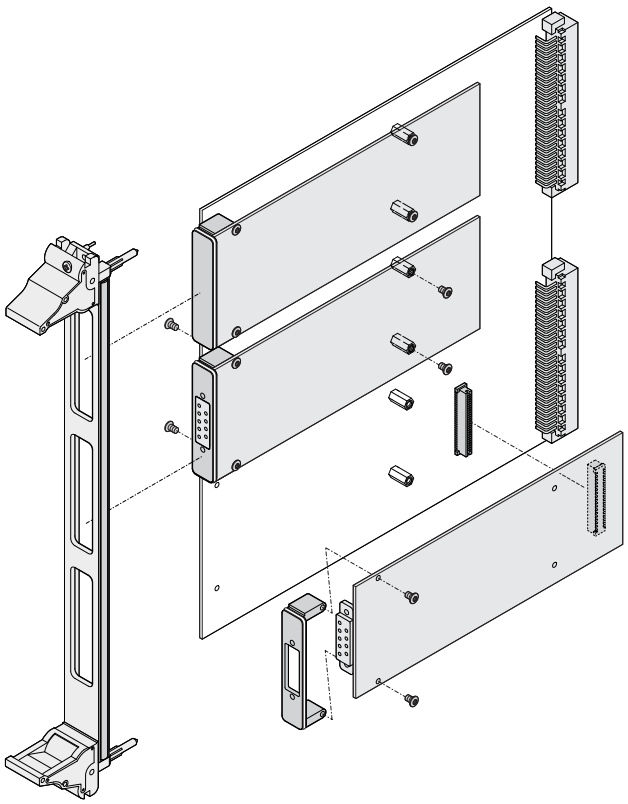

04615052

- FMC = FPGA mezzanine card
- For standard defined I/O mezzanine modules which connect to carrier cards
- For single 69.0 x 76.5 mm or double 139.0 x 76.5 mm modules
- In accordance with Vita 57.1 specification

FMC mezzanine front panel kit, shielded, with IEL handle

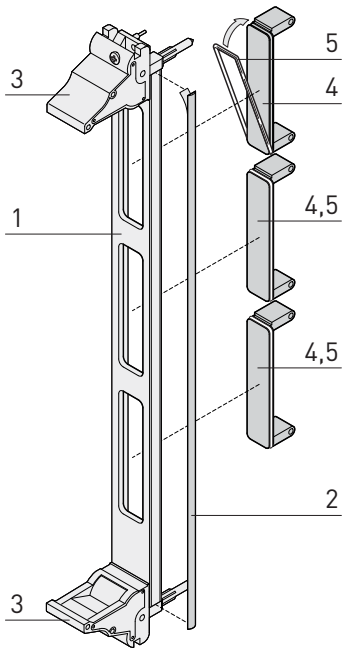

04615050

- 3 U or 6 U, 4 HP, U-shaped front panels with textile gasketing
- 1 or 3 FMC cutouts (depending on height)
- 1 or 2 IEL front handles (depending on height)
- EMC shielded, both the front panel and the FMC bezels

Delivery includes (assembled)

Item	Qty 3 U	Qty 6 U	Description
1	1	1	FMC front panel, U profile, Al, 4 HP, front anodized, rear conductive, 3 U has 1 cut out, 6 U has 3 cut outs
2	1	1	EMC textile gasket for front panel
3	1	2	IEL handle (handel, black, RAL 9005; button, light grey, RAL 7035)
4	1	3	FMC bezel for front panel cut outs
5	1	3	EMC gasket (O-ring)
6	1	1	Assembly kit

Order Information

Height U	Part no.
3	20836-253
6	20836-254
Accessories	
Spacer to mount PMC mezzanine boards	see page 7.15

Front panels

EMC bezel for FMC Mezzanine front panel cut-outs

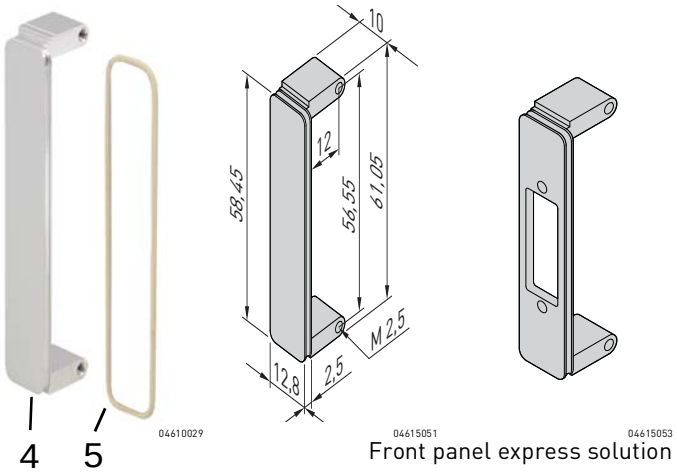

Front panel express solution

- FMC bezel is fitted into FMC Mezzanine front panel cut-outs
- Material, Al extrusion (anodised, contact surface conductive)
- Shielding for FMC bezels with an optional conductive O-ring, please order separately

Order Information

Description	Item	Qty/PU piece	Part no.
EMC bezel for FMC Mezzanine front panel cut outs	4	10	20835-849
Accessories			
EMC gasket for mezzanine front panel item 5 , O-ring, (VITA 57.1), 1 piece (standard pack quantity 10 pieces)			**60835-077**
Cheesehead screw M2.5 × 5 mm, PU 100 pieces			**21100-624**

Spacer to mount PMC and FMC mezzanine boards

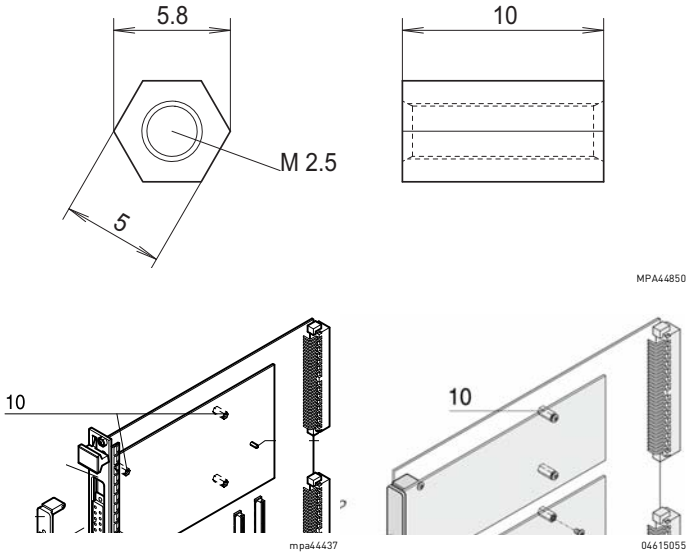

Spacer within PMC application

- To provide a standoff between mezzanine boards per the IEEE P1386 or VITA 57.1 specification and the carrier card

Order Information

Description	Item	Material	Qty	Part no.
Spacer	10	St, zinc-plated	1 piece (SPQ 10)	**60897-278**

Delivery is exclusively made in Standard Pack Quantity (SPQ):
Please order at least 10 pieces or a multiple.
Pricing is per individual item.

Voltage keying/coding pin for PMC mezzanine boards

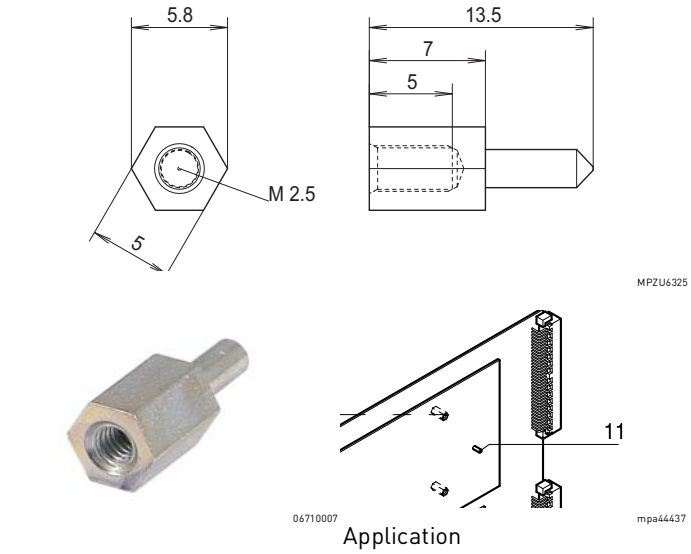

Application

- To prevent accidental damage when fitting mezzanine boards, keying/coding pins are bolted to the VMEbus boards to distinguish between 3.3 V and 5 V operation. The mezzanine boards have a hole drilled in the appropriate position. The keying/coding pin thus ensures that only mezzanine boards with the same operating voltage can be inserted. For double-height euroboards 2 pieces are required.

Order Information

Description	Item	Material	Qty	Part no.
Keying/ coding pin 5 V/3.3 V	11	St, zinc-plated	1 piece (SPQ 10)	**60827-026**

Delivery is exclusively made in Standard Pack Quantity (SPQ):
Please order at least 10 pieces or a multiple.
Pricing is per individual item.

Content

Cabinets 1
Wall mounted cases 2
Accessories for cabinets and wall mounted cases . 3
Climate control . 4
Electronics cases 5
Subracks/ 19" chassis 6
Front panels, plug-in units . . . 7
Systems 8
Power supply units 9
Backplanes . . . 10
Connectors, front panel component system 11
Appendix 12

Plug-in units

04612001

Plug-in units as kits or from individual parts

- Handles in different designs for various applications
- Inserter/extractor handles for forces up to 1500 N
- Upgradable EMC shielding

Standards

- IEC 60297-3-101 / IEEE 1101.1/11
  IEC 60297-3-102 / IEEE 1101.10
  IEC 60297-3-103
  IEC 1296

30407004

ServicePLUS

e.g. individual configuration and assembly

e.g. modifications (special colours or sizes)

e.g. custom solutions with modification to the plug-in units

www.frontpanelexpress.eu

Plug-in units

Overview 7.17

Handles for plug-in units

		Kit Page	Individual components Page
04602005	**For CompactPCI and VME64x applications** Inserter/extractor handle, type IEL/IET, allows keying/coding and insertion/extraction forces up to 700 N per pair	7.18	7.20
04605005	**For VPX, VXS, CompactPCI and VME64x applications** Inserter/extractor handle, type XL, allows keying/coding and insertion/extraction forces up to 1500 N per pair	7.30	7.31
04604059	**For e.g. VMEbus applications** Trapeziform extractor handle, type 2	7.33	7.35
04692005	**For e.g. VMEbus applications** Trapeziform extractor handle, type 1	7.40	7.42
04692011	**For Multibus® II applications** Extractor handle, multibus type II, IEC 60297	–	7.46
04692008	**For plug-in units in accordance with IEC 60297** Extractor handle in key form 1	–	7.48
04692010	**For plug-in units in accordance with IEC 60297** Extractor handle in key form 2	–	7.51
04692003	**For plug-in units in accordance with IEC 60297** Static handle	7.54	7.56
04692004	**Accessories for plug-in units** Mechanical protection for static trapeziform handle and fixing materials kit	7.64	–

Plug-in units with injector and extractor handles

For CompactPCI and VME64x applications 7.18

For VPX, VXS, CompactPCI and VME64x applications 7.30

For e.g. VMEbus applications type 2 ..... 7.33

For e.g. VMEbus applications type 1 ..... 7.40

For Multibus® II applications 7.46

For plug-in units in accordance with IEC 60297 ... 7.48

For plug-in units in accordance with IEC 60297 ... 7.51

For plug-in units in accordance with IEC 60297 ... 7.54

Accessories for plug-in units 7.62

PCB cover 7.64

Plug-in units – for CompactPCI, VME64x

Kits

3 U

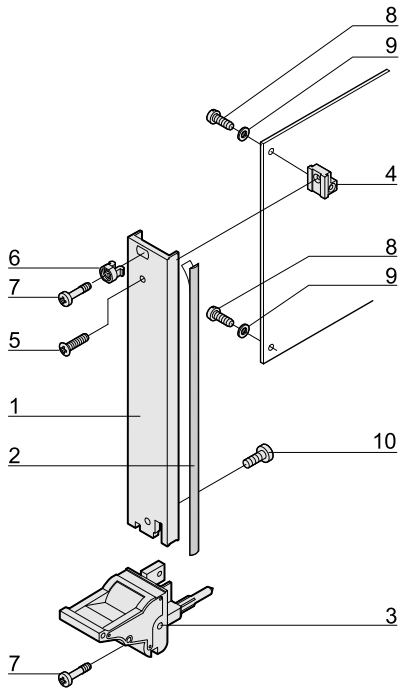

04602073

6 U

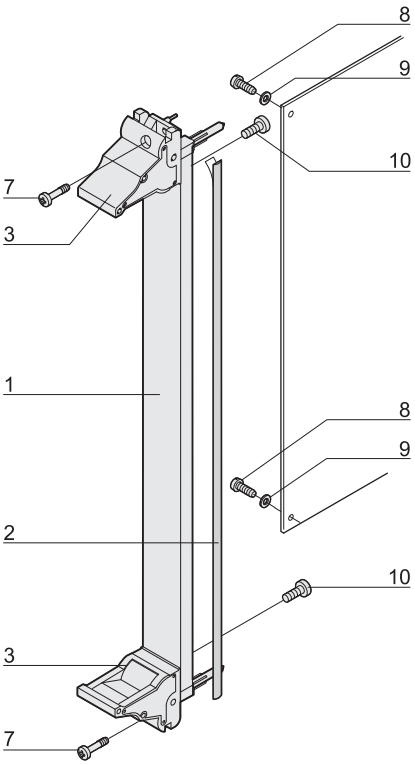

04602074

Plug-in units with IEL inserter/extractor handle for CompactPCI/VME64x applications

- In accordance with IEEE 1101.10 and IEC 60297-3-102
- Codable to IEC 60297-3-103/ IEEE 1101.10
- Front panel shielded
- Suitable for insertion and extraction forces up to 700 N (per pair)
- Suitable for fitting microswitches

Delivery comprises (kit)

Item	Qty 3 U <8HP	Qty 3 U ≥8HP	Qty 6 U <8HP	Qty 6 U ≥8HP	Description
1	1	1	1	1	Front panel (U profile), Al, front anodised, rear conductive
2	1	1	1	1	EMC sealing (textile), core: foam, sleeve: textile cladding, CuNi coated
3	1	1	2	2	Handle with integrated alignment pin for perforated strips and guide rails, lever: plastic, PC, black, RAL 9005 key: plastic, PC, light grey, RAL 7035
4	1	1	-	-	Board support, die-cast zinc
5	1	1	-	-	Raised Pozidrive countersunk screw M2.5 × 8, St, nickel-plated
6	1	3	-	2	Sleeve, PA, grey
7	2	4	2	4	Pozidrive collar screw, M2.5 × 12.3, St, nickel-plated
8	2	2	2	2	Panhead screw with Torx/slot, M2.5 × 6, St, zinc-plated, self-locking
9	2	2	2	2	Washer A2.7, DIN 125, St, nickel-plated
10	1	1	2	2	Panhead screw with Torx, M2.5 × 7, St, nickel-plated

Order Information

Width HP	Part no. Rear I/O	Part no. Front assembly
3 U Height		
4	20848-751	20848-585
6	-	20848-587
8	20848-752	20848-589
10	-	20848-590
12	-	20848-591
6 U Height		
4	-	20848-592
6	-	20848-594
8	-	20848-596
10	-	20848-597
12	-	20848-598
Accessories		
Microswitch for handles, CompactPCI/VME64x application PU 10 pieces		20817-606

- Dimension drawing of front profile see page 7.26
- Description of microswitch see page 7.31

Plug-in units – for CompactPCI, VME64x

Kits

3 U

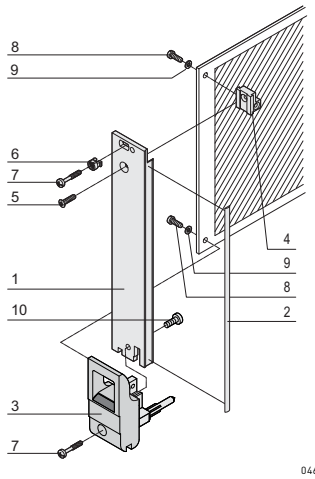

< 8 HP

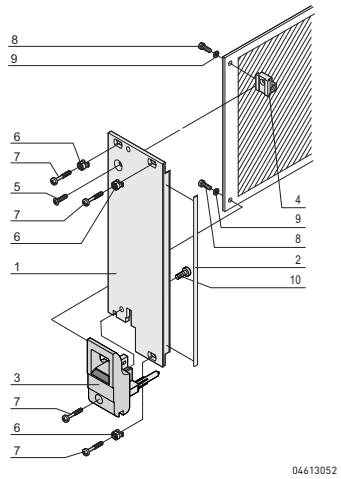

≥8 HP

6 U

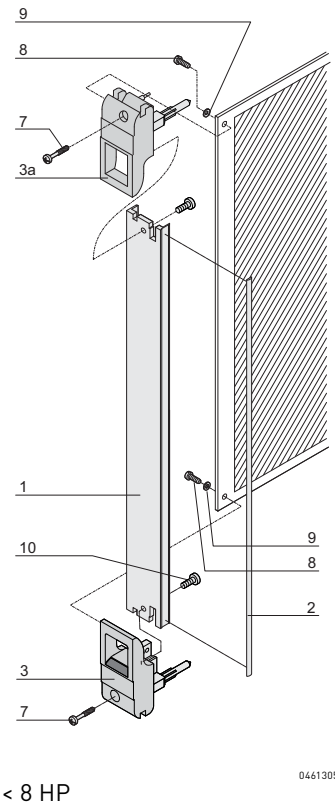

< 8 HP

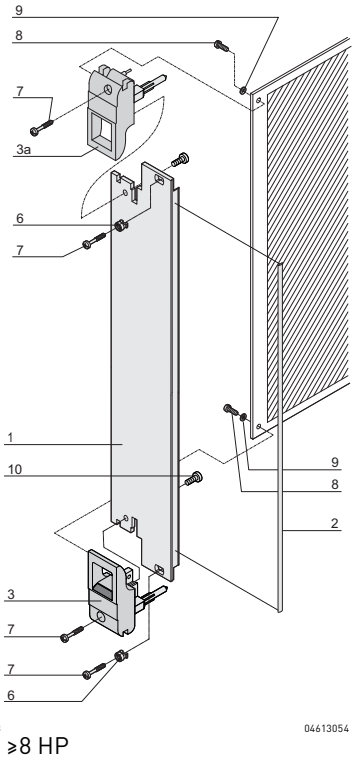

≥8 HP

Plug-in units with IET insertion/extractor handle for CompactPCI/VME64x applications

- Suitable for insertion and extraction forces up to 700 N (per pair)
- Version for telecoms applications
- To IEEE 1101.10 and IEC 60297-3-102
- Codable to IEC 60297-3-103/ IEEE 1101.10
- Front panel, shielded (3 U, 6 HP)
- designed for fitting of microswitches
- Online download of 3D CAD data

NEW

Delivery includes (Kit)

Item	Qty				Description
	3 U		6 U		
	<8 HP	≥8 HP	<8 HP	≥8 HP	
1	1	1	1	1	Front panel (U profile), Al, front anodized, rear conductive
2	1	1	1	1	EMC sealing (textile), core: foam, sleeve: textile cladding, CuNi coated
3	1	1	2	2	Handle with integrated alignment pin for perforated strips and guide rails, lever: plastic, PC, black, RAL 9005 Key: Plastic, PC, light gray, RAL 7035
4	1	1	-	-	Board support, die-cast zinc
5	1	1	-	-	Raised Pozidrive countersunk screw M2.5 × 8, St, nickel-plated
6	1	3	-	2	Sleeve, PA, gray
7	2	4	2	4	Pozidrive collar screw, M2.5 × 12.3, St, nickel-plated
8	2	2	2	2	Panhead screw with Torx/slot, M2.5 × 6, St, zinc-plated, self-locking
9	2	2	2	2	Washer A2.7, DIN 125, St, nickel-plated
10	1	1	2	2	Panhead screw with Torx, M2.5 × 7, St, nickel-plated

Order Information

Width HP	Part no.
3 U Height	
4	**20848-763**
8	**20848-764**
12	**20848-765**
6 U Height	
4	**20848-766**
8	**20848-767**
12	**20848-768**
Accessories	
Coding peg, PC, UL 94 V-0, grey, RAL 7035 PU 100 pieces	**20817-501**
Microswitch for handles, CompactPCI/VME64x application PU 10 pieces	**20817-606**

- For description of coding peg and microswitch see page 7.23
- Description of microswitch see page 7.31

Plug-in units – for CompactPCI, VME64x

Individual components — Front panels, U-profiles, for extractor handles, type IEL, IET

Order Information

		Front panel, U profile, shieldable			Textile EMC gasket		Front panel, flat, unshielded, front mounting
		Front mounting	Front mounting, PCB fixing with 0.1" offset	Rear I/O mounting			
		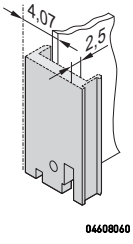 04608060	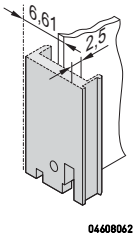 04608062	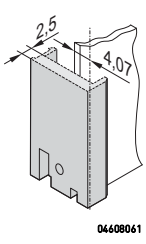 04608061	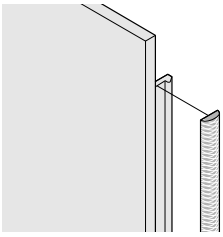 BGA45760		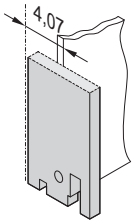 04608063
		Al extrusion, 2.5 mm, front anodised, rear conductive; alignment pin pressed-in (3 U only), stainless steel; manufacturing process causes various surface structures to appear between 4 to 12 HP and 14 to 16 HP			always fixed laterally on the front panel, in the groove of the profile, textile gasket, core: foam, sleeve: textile cladding with CuNi coating, UL 94 V-0, temperature range -40 ... 70 °C		front panel, Al, 2.5 mm, front anodised, rear irisdescent green chromated
	Width HP	1 piece (SPQ 5)[1]	1 piece (SPQ 5)[1]	1 piece (SPQ 5)[1]	PU 10 pieces	PU 100 pieces	1 piece (SPQ 5)[1]
		3 U Height					
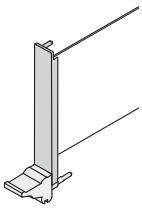 04608067	4	30848-312	30848-426	30848-867			30848-327
	5	30848-300	30848-427	–			30848-328
	6	30848-313	30848-428	–			30848-329
	7	30848-301	30848-429	–			30848-330
	8	30848-314	30848-430	30848-869			30848-331
	9	20848-227	–	–	21101-853	21101-854	–
	10	30848-315	30848-431	–			30848-333
	11	20848-228	–	–			–
	12	30848-316	30848-432	30848-985			30848-335
	14	20848-230	–	–			–
	16	20848-232	–	–			–
		6 U Height					
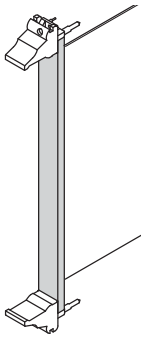 04608066	4	30848-317	30848-317	30848-317			30848-336
	5	30848-304	30848-304	30848-304			30848-337
	6	30848-318	30848-318	30848-318			30848-338
	7	30848-305	30848-305	30848-305			30848-339
	8	30848-319	30848-319	30848-319			30848-340
	9	20848-243	20848-243	20848-243	21101-855	21101-856	–
	10	30848-320	30848-320	30848-320			30848-342
	11	20848-244	20848-244	20848-244			–
	12	30848-321	30848-321	30848-321			30848-344
	14	20848-246	20848-246	20848-246			–
	16	20848-248	20848-248	20848-248			–
Fixing material see page		7.23	7.23	7.23			7.23
Dimensions see page		7.26	7.26	7.25			7.27

1) SPQ (standard pack quantity): Part number includes 1 piece, but delivery is exclusively made in standard pack quantity (SPQ); please order at least the SPQ quantity or a multiple

Part no. includes one packing unit (PU); delivery is exclusively made in PU

Plug-in units – for CompactPCI, VME64x

Individual components — Inserter/extractor handle, type IEL

Order Information

	Inserter/extractor handle, type IEL, board fixing without offset				Inserter/extractor handle, type IEL, board fixing with 0.1" offset			
	lever: light grey, RAL 7035 key: black, RAL 9005		lever: black, RAL 9005 key: light grey, RAL 7035		lever: light grey, RAL 7035 key: black, RAL 9005		lever: black, RAL 9005 key: light grey, RAL 7035	
	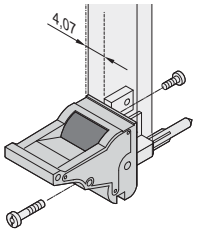 04608050		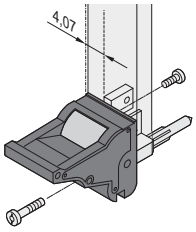 04608052		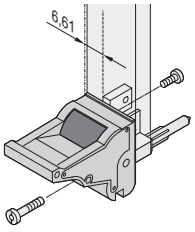 04608051		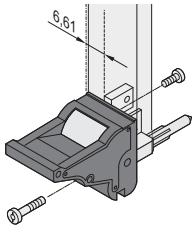 04608053	
	in accordance with IEEE 1101.10 and IEC 60297-3-102, with locking, suitable for insertion and extraction forces up to 700 N (per pair), suitable for fitting of microswitches; block die-cast zinc, nickel-plated, with integrated alignment pin for perforated strip, codable to IEEE 1101.10 and IEC 60297-3-103, lever/key UL 94 V-0, slotted Pozidrive collar screw, M2.5 x 12.3, St, nickel-plated, panhead screw with Torx, M2.5 x 7, St, nickel-plated				in accordance with IEEE 1101.10 and IEC 60297-3-102, with locking, suitable for insertion and extraction forces up to 700 N (per pair), suitable for fitting of microswitches; 0.1" offset is used for PSUs with SMD Plus, block die-cast zinc, nickel plated; with integrated alignment pin for perforated strip, codable to IEEE 1101.10 and IEC 60297-3-103, lever/key UL 94 V-0, slotted Pozidrive collar screw, M2.5 x 12.3, St, nickel-plated, panhead screw with Torx, M2.5 x 7, St, nickel-plated			
Assembly	PU 10 pieces	PU 100 pieces	PU 10 pieces	PU 100 pieces	PU 10 pieces	PU 100 pieces	PU 10 pieces	PU 100 pieces
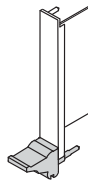 04608071	**3 U Height** bottom							
Front side	20817-620	20817-621	20817-612	20817-613	20817-690	20817-691	20817-682	20817-683
Rear I/O	20817-622	20817-623	20817-614	20817-615	–	–	–	–
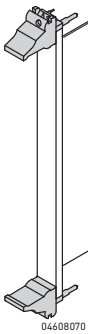 04608070	**6 U Height** top							
Front side	20817-622	20817-623	20817-614	20817-615	20817-692	20817-693	20817-684	20817-685
Rear I/O	20817-620	20817-621	20817-612	20817-613	–	–	–	–
	bottom							
Front side	20817-620	20817-621	20817-612	20817-613	20817-690	20817-691	20817-682	20817-683
Rear I/O	20817-622	20817-623	20817-614	20817-615	–	–	–	–
Dimensions see page	7.28				7.28			

Individual components — Inserter/extractor handle, type IET

Order Information

	Inserter/extractor handle, type IET, board fixing without offset				Inserter/extractor handle, type IET, board fixing with 0.1" offset			
	lever: light grey, RAL 7035 key: black, RAL 9005		lever: black, RAL 9005 key: light grey, RAL 7035		lever: light grey, RAL 7035 key: black, RAL 9005		lever: black, RAL 9005 key: light grey, RAL 7035	
	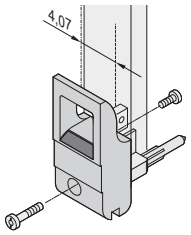 04608054		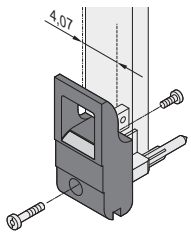 04608056		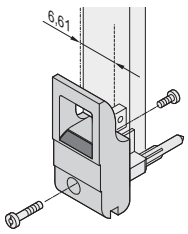 04608055		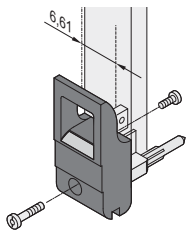 04608057	
	in accordance with IEEE 1101.10 and IEC 60297-3-102, with locking, suitable for insertion and extraction forces up to 700 N (per pair), suitable for fitting of microswitches; block die-cast zinc, nickel-plated, with integrated alignment pin for perforated strip, codable to IEEE 1101.10 and IEC 60297-3-103, lever/key UL 94 V-0, Slotted Pozidrive collar screw, M2.5 x 12.3, St, nickel-plated, panhead screw with Torx, M2.5 x 7, St, nickel-plated				in accordance with IEEE 1101.10 and IEC 60297-3-102, with locking, suitable for insertion and extraction forces up to 700 N (per pair), suitable for fitting of microswitches; 0.1" offset is used for PSUs with SMD Plus: block die-cast zinc, nickel plated; with integrated alignment pin for perforated strip, codable to IEEE 1101.10 and IEC 60297-3-103, lever/key UL 94 V-0, slotted Pozidrive collar screw, M2.5 x 12.3, St, nickel-plated, panhead screw with Torx, M2.5 x 7, St, nickel-plated			
Assembly	PU 10 pieces	PU 100 pieces	PU 10 pieces	PU 100 pieces	PU 10 pieces	PU 100 pieces	PU 10 pieces	PU 100 pieces
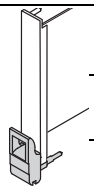 04608073	**3 U Height** bottom							
Front side	20817-660	20817-661	20817-652	20817-653	20817-714	20817-715	20817-706	20817-707
Rear I/O	20817-662	20817-663	20817-654	20817-655	–	–	–	–
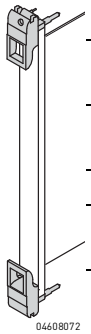 04608072	**6 U Height** top							
Front side	20817-662	20817-663	20817-654	20817-655	20817-716	20817-717	20817-708	20817-709
Rear I/O	20817-660	20817-661	20817-652	20817-653	–	–	–	–
	bottom							
Front side	20817-660	20817-661	20817-652	20817-653	20817-714	20817-715	20817-706	20817-707
Rear I/O	20817-662	20817-663	20817-654	20817-655	–	–	–	–
Fixing material see page	7.23				7.23			
Dimensions see page	7.29				7.29			

Plug-in units – for CompactPCI, VME64x

Individual components — inserter/extractor handles, type IEL/IET, fixing material

Order Information

3 U

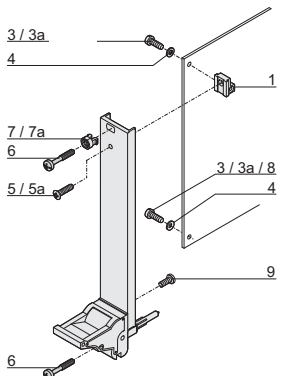

6 U

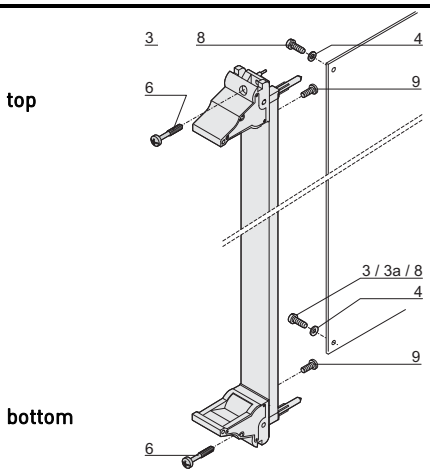

Fixing material	Item	3 U	Required quantity 3 U < 8 HP	3 U ⩾ 8 HP	6 U < 8 HP	6 U ⩾ 8 HP	Qty/PU	Part no.
Printed board bracket Zn die-cast	1	06707050	1	1	–	–	1 piece (SPG 10)[1)]	**60807-181**
Pozidrive panhead screw M2.5 × 6, St, nickel-plated , not for 0.1" offset	3	AZA45177	2	2	2	2	100	**21101-219**
Slotted panhead screw with Torx 8 M2.5 × 6, St, zinc-plated, self-securing thread not for 0.1" offset	3a	aza45940	2	2	2	2	100	**24560-159**
Washer 2.7, DIN 125, St, nickel-plated	4	AZA46586	2	2	2	2	100	**21100-721**
Raised Pozidrive countersunk panhead screw M2.5 × 8, St, nickel-plated	5	06702056	1	1	–	–	100	**21100-429**
Raised countersunk panhead screw with Torx 8 M2.5 × 8, St, nickel-plated	5a	06708050	1	1	–	–	100	**24560-164**
Pozidrive/slotted collar screw M2.5 × 12.3, St, nickel-plated AZA46586	6	AZA46586	1	3	–	2	100	**21101-101**
Plastic sleeve, for form hole 5.9 x 3.3 PA, UL 90 V-2, grey	7	aza45933	1	3	–	2	100	**21100-464**
Metal sleeve, for form hole 5.9 x 3.3, press-in Stainless steal	7a	aza45934	1	3	–	2	100	**21100-662**
Pozidrive panhead screw for IEL/IET handle with 0.1" offset M2.5 × 10, nickel-plated steel	8	AZA45177	2	2	2	2	100	**21101-220**
Torx panhead screw M2.5 × 7, St, nickel-plated, Torx 8,	9	aza45940	1	1	2	2	100	**24560-147**

SPQ (standard pack quantity): Part number includes 1 piece, but delivery is exclusively made in standard pack quantity (SPQ); please order at least the SPQ quantity or a multiple

Plug-in units – for CompactPCI, VME64x

Individual components — Inserter/extractor handles, type IEL/IET, accessories

Order Information

Microswitch	Keying/coding	Label strips	Label strips	
with cable and plug	in accordance with IEC 60297-3-103	19 x 9.5 mm	19 x 9.5 mm	19 x 4.8 mm
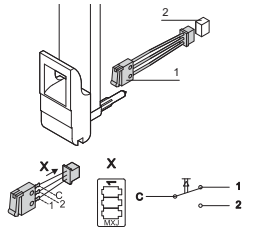 bga46314 bga46315	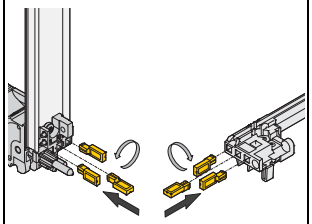 04612052	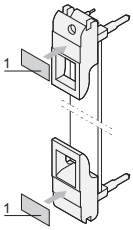 04606050	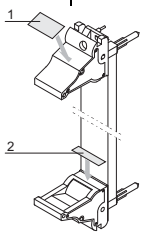 bga46317	
Molex connector housing 51021-0300, Molex crimp contact 50058-8000 and fixing clip (item 3), plastic, PC, UL 94 V-0, max. switched current 50 mA, operating range -25 °C to +70 °C, mech. life ≥ 20,000 switching cycles, electr. life ≥ 20,000 switching cycles; suitable mating connectors (item 2) e.g. Molex 53261-0319, 53048-0310, 53047-0310, 53398-0319, 51047-0300 not included in scope of delivery	The keying/coding pegs prevent plug-in units to be mounted in wrong slots. They are inserted in the chambers of the codable card guides as well as in the insertion/extraction handles IEL or IET (4 possible positions), resulting in 64 codings per card guide; when coding the upper and lower card guide, 4096 codings will result; guide rails for coding see page 6.40	Polyester, self-adhesive,white, 1 sheet 210 pieces (Item 1)	Polyester, self-adhesive, white, 1 sheet 210 pieces (item 1)	Polyester, self-adhesive, white, 1 sheet 320 pieces (item 2)
PU 10 pieces	PU 100 pieces	PU 210 pieces	PU 210 pieces	PU 320 pieces
3 U Height bottom				
20817-606	20817-501	60817-340	60817-340	60817-341
6 U Height top				
20817-606	20817-501	60817-340	60817-340	60817-341
bottom				
20817-606	20817-501	60817-340	60817-340	60817-341

Plug-in units – for CompactPCI, VME64x

Dimensions — Front panels, U-profiles, inserter/extractor handles, type IEL/IET, rear I/O, shieldable

PCB fixing without offset

3 U

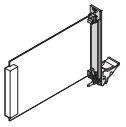

04608068

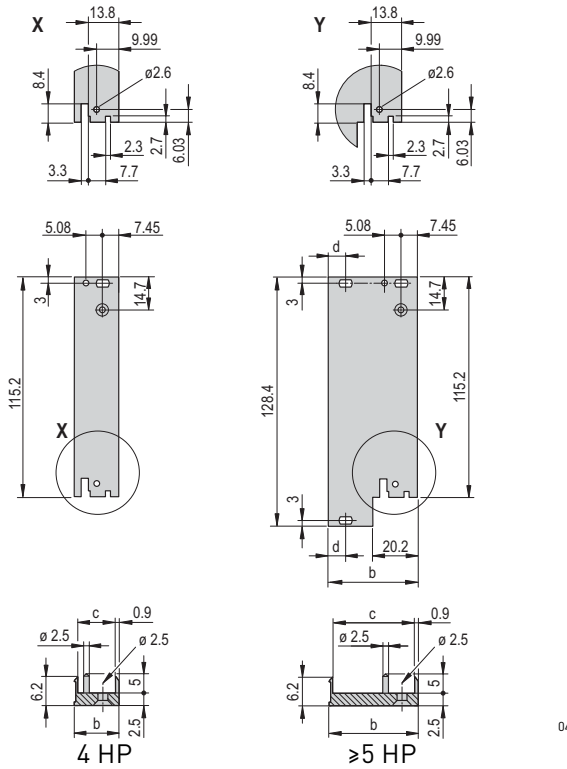

04608069

6 U

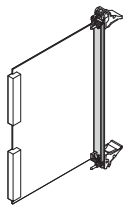

04608076

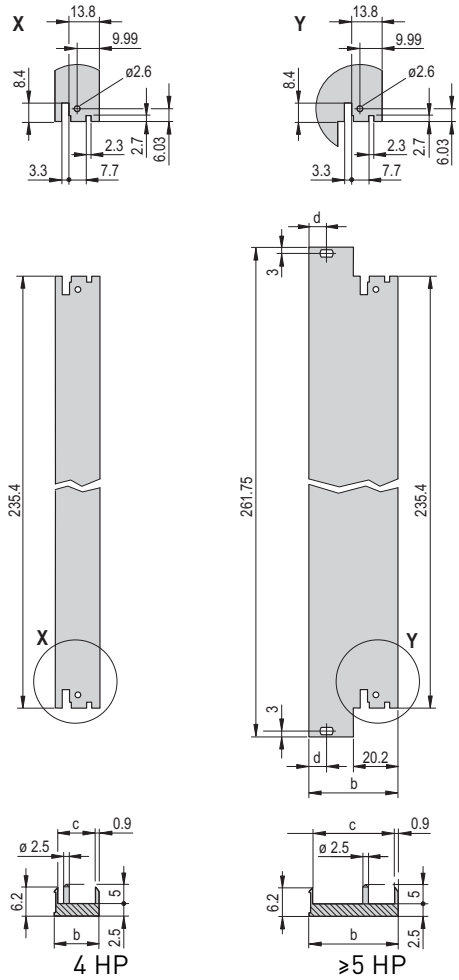

04608075

Dimensions table

Width	b	c	d
HP	mm	mm	mm
4	19.98	17.45	–
5	25.06	22.53	–
6	30.14	27.61	–
7	35.22	32.69	–
8	40.30	37.77	7.45
9	45.38	42.85	7.45
10	50.46	47.93	7.45
11	55.54	53.01	7.45
12	60.62	58.09	7.45
14	70.78	68.25	7.45
16	80.94	78.41	7.45

Plug-in units – for CompactPCI, VME64x

Dimensions Front panels, U-profiles, inserter/extractor handles, type IEL, IET, shieldable

PCB fixing without offset / with 0.1" offset

3 U

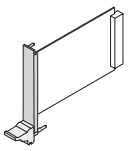

04608067

6 U

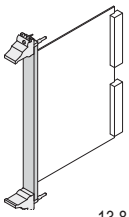

04608066

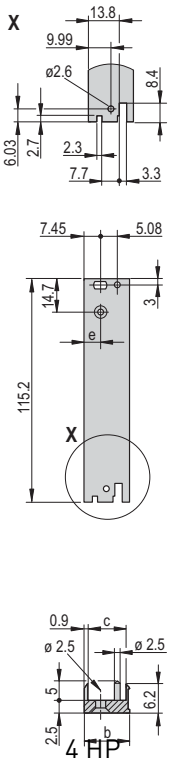

04608064

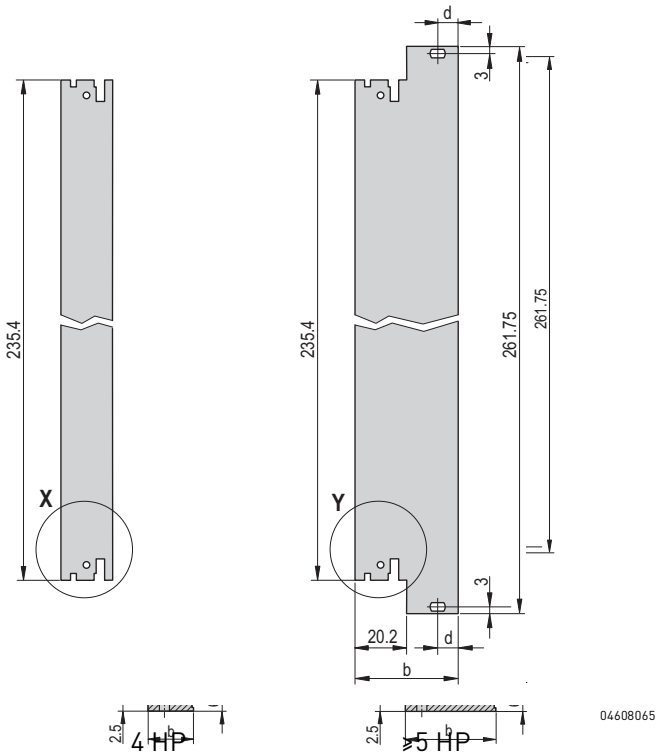

04608065

Dimensions table

Width HP	b mm	c mm	d mm	without offset e mm	with 0.1" offset e mm
4	19.98	17.45	–	7.45	9.99
5	25.06	22.53	–	7.45	9.99
6	30.14	27.61	–	7.45	9.99
7	35.22	32.69	–	7.45	9.99
8	40.30	37.77	7.45	7.45	9.99
9	45.38	42.85	7.45	7.45	9.99
10	50.46	47.93	7.45	7.45	9.99
11	55.54	53.01	7.45	7.45	9.99
12	60.62	58.09	7.45	7.45	9.99
14	70.78	68.25	7.45	7.45	9.99
16	80.94	78.41	7.45	7.45	9.99

Plug-in units – for CompactPCI, VME64x

Dimensions Front panels, inserter/extractor handles, type IEL/IET, unshielded

PCB fixing without offset

3 U

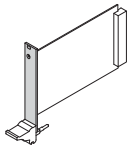

04608080

6 U

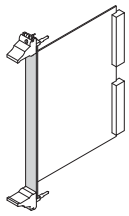

04608079

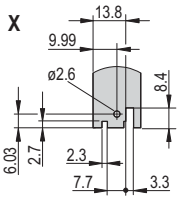

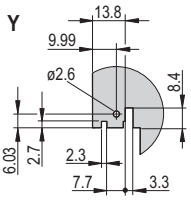

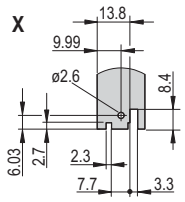

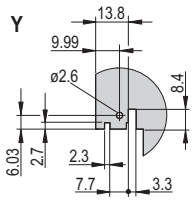

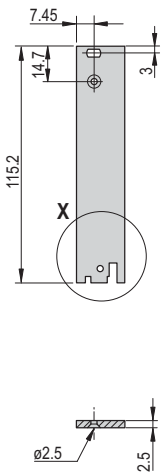

4 HP

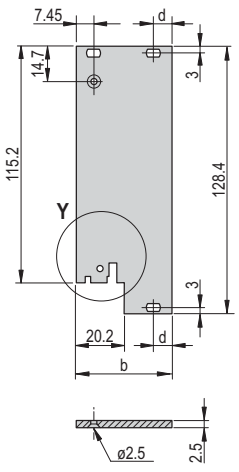

≥5 HP

04608077

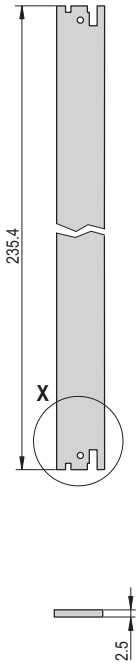

4 HP

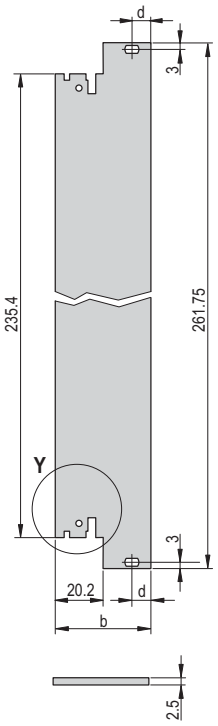

≥5 HP

04608078

Dimensions table

Width HP	b mm	d mm
4	19.98	–
5	25.06	–
6	30.14	–
7	35.22	–
8	40.30	7.45
9	45.38	7.45
10	50.46	7.45
11	55.54	7.45
12	60.62	7.45
14	70.78	7.45
16	80.94	7.45

Plug-in units – for CompactPCI, VME64x

Dimensions Inserter/extractor handle, type IEL

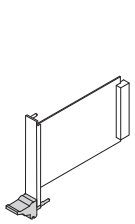

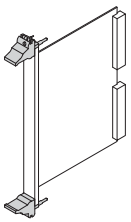

04608071 04608070

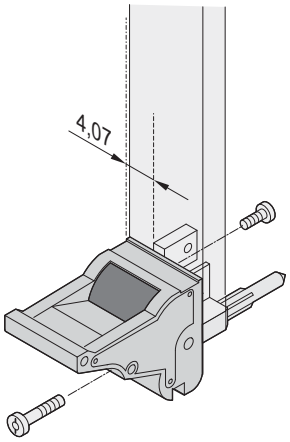

04608050

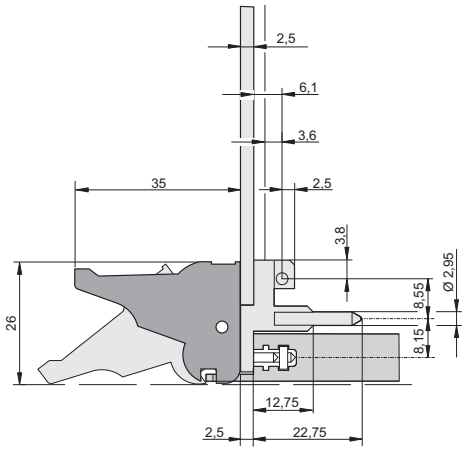

04603059

bottom

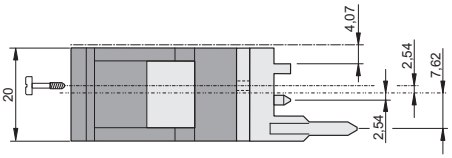

04607053

top

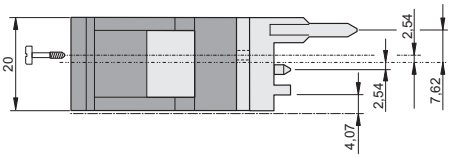

04607054

Dimensions Inserter/extractor handle, type IEL, 0.1" offset

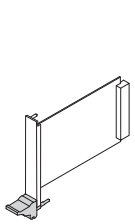

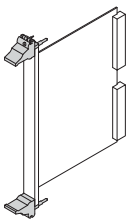

04608071 04608070

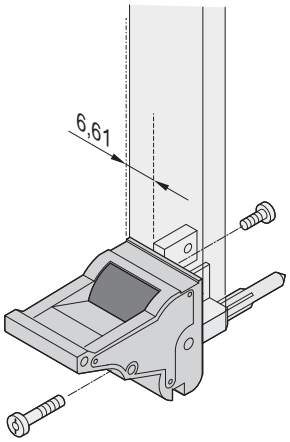

04608051

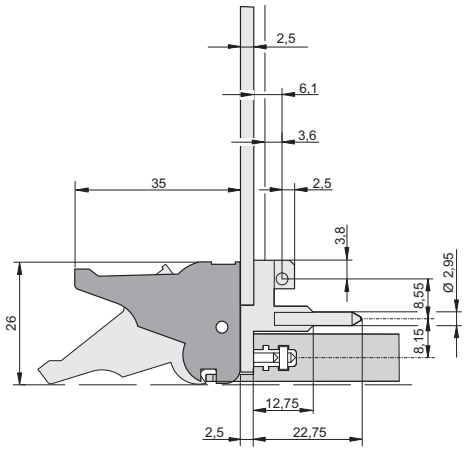

04603059

bottom

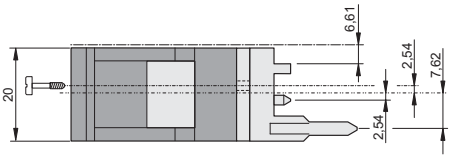

04603061

top

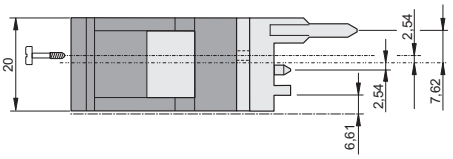

04607055

Plug-in units – for CompactPCI, VME64x

Dimensions Inserter/extractor handle, type IET

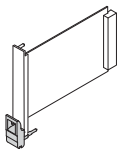

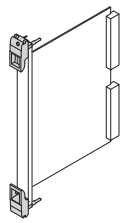

04608073 04608072

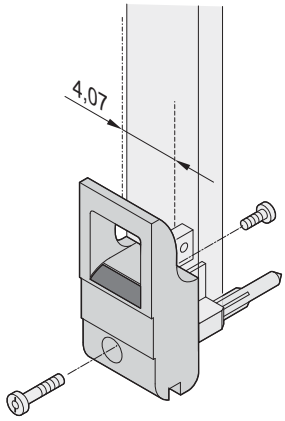

04608054

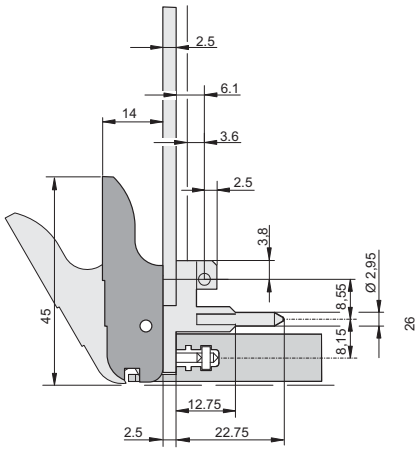

04603060

bottom

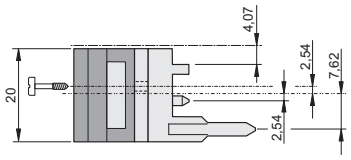

04607056

top

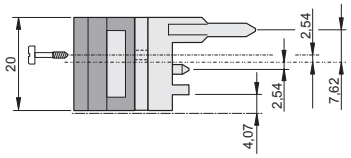

04607057

Dimensions Inserter/extractor handle, type IET, 0.1" offset

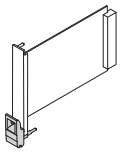

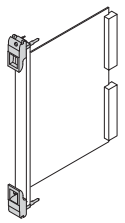

04608073 04608072

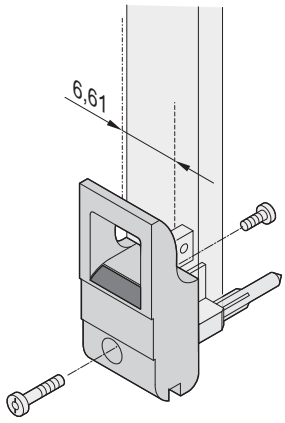

04608055

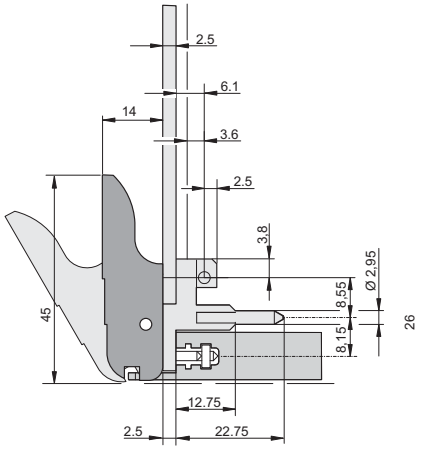

04603060

bottom

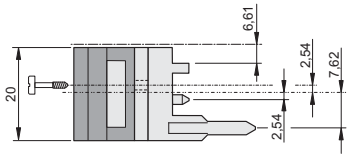

04603062

top

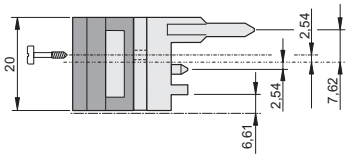

04607058

Plug-in units – for CompactPCI, VME64x, VXS, VPX

Plug-in units with XL insertion/extractor handle for CompactPCI, VME64x, VXS and VPX applications

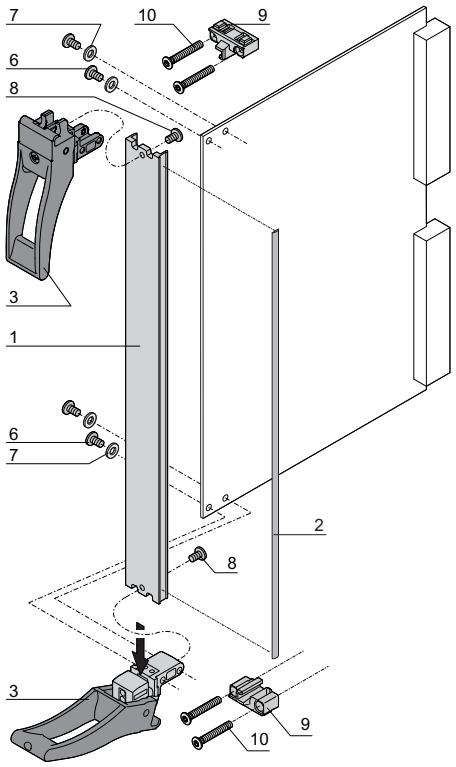

04613055

< 8 HP

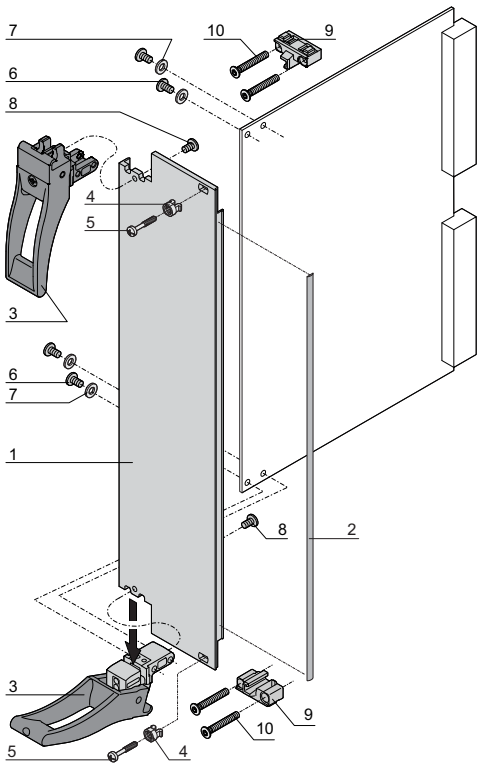

04613056

≥8 HP

- Suitable for insertion and extraction forces up to 1500 N (per pair)
- To IEEE 1101.10 and IEC 60297-3-102
- Codable to IEC 60297-3-103/ IEEE 1101.10
- Front panel, shielded (6 U)
- Versions allowing microswitches to be fitted on request
- Online download of 3D CAD data

NEW

Delivery includes (Kit)

Item	Qty <8 HP	Qty ≥8 HP	Description
1	1	1	Front panel (U profile), Al, front anodized, rear conductive
2	1	1	EMC sealing (textile), core: foam, sleeve: textile cladding, CuNi coated
3	2	2	Handle with integrated alignment pin for perforated strips and guide rails, lever: plastic, PC, black, RAL 9005 Key: Plastic, PC, light gray, RAL 7035
4	-	2	Sleeve, PA, gray
5	-	2	Pozidrive collar screw, M2.5 × 12.3, St, nickel-plated
6	4	4	Panhead screw with Torx/slot, M2.5 × 6, St, zinc-plated, self-locking
7	4	4	Washer A2.7, DIN 125, St, nickel-plated
8	4	4	Pan head screw with torx M2.5 × 7, St, zinc-plated
9	1	1	XL bearing, zinc diecast, nickel-plated
10	4	4	Countersunk screw with torx M2.5 × 17, St, zinc-plated

Order Information

Width HP	Part no.
6 U Height	
4	**20848-769**
8	**20848-770**
12	**20848-771**

- Dimension drawing of front profile, see page 7.32

Plug-in units – for CompactPCI, VME64x, VXS, VPX

Individual components — Inserter/extractor handle, type XL, front panels, microswitch

		Inserter/extractor handle, type XL	U front profile, shieldable, for inserter/extractor handle, type XL		EMC gasket (textile)		Microswitch item 1
			without cut-out for microswitch	with cut-out for microswitch			with cable and plug
		04605008	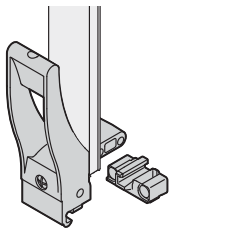 04608081	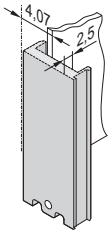 04608082	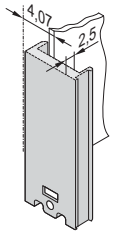 04608083	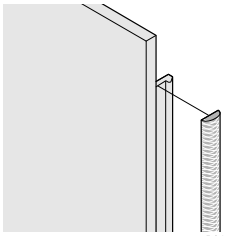 BGA45760	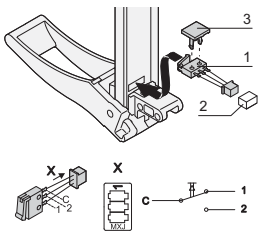 04608084 bga46315
		kit, incl. die-cast bearing and assembly kit; insertion and extraction force up to 1500 Nm per pair; handle in PA, fibreglass reinforced, UL 94V 0; robust board fixing with double bolt fixing, microswitches can be fitted	Al, front anodised, sides and rear conductive, for sleeve and collar screw see page 7.37	Al, front anodised, sides and rear conductive for sleeve and collar screw see page 7.37	always fixed laterally on the front panel, in the groove of the profile, textile gasket, core: foam, sleeve: textile cladding with CuNi coating, UL 94 V-0		Molex connector housing 51021-0300, Molex crimp contact 50058-8000 and fixing clip (item 3), plastic, PC, UL 94 V-0, max. switched current 50 mA, operating range -25 °C to +70 °C, mech. life ≥ 20,000 switching cycles, electr. life ≥ 20,000 switching cycles; suitable mating connector (item 2) e.g. Molex 53261-0319, 53048-0310, 53047-0310, 53398-0319, 51047-0300, not included in scope of delivery
	Width HP	PU 10 pieces	1 piece (SPQ 5)[1]	1 piece (SPQ 5)[1]	PU 10 pieces	PU 100 pieces	PU 10 pieces
		6 U Height					
	4	20817-874	30849-153	30849-154	21101-855	21101-856	20817-877
	8		30849-155	30849-156			
	12		30849-157	30849-158			
Dimensions see page		7.30	7.30	7.30			

1) SPQ (standard pack quantity): Part number includes 1 piece, but delivery is exclusively made in standard pack quantity (SPQ); please order at least the SPQ quantity or a multiple

Part no. includes one packing unit (PU); delivery is exclusively made in PU

Note

- Please order front panels separately

Plug-in units – for CompactPCI, VME64x, VXS, VPX

Dimensions U front profile for extractor handle type XL, shieldable

6 U/4 HP

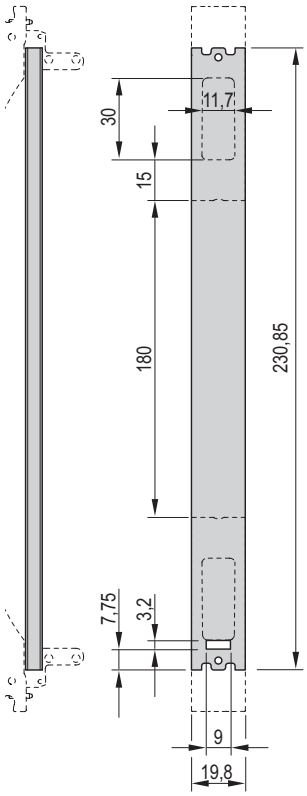

04605053

6 U/8 HP

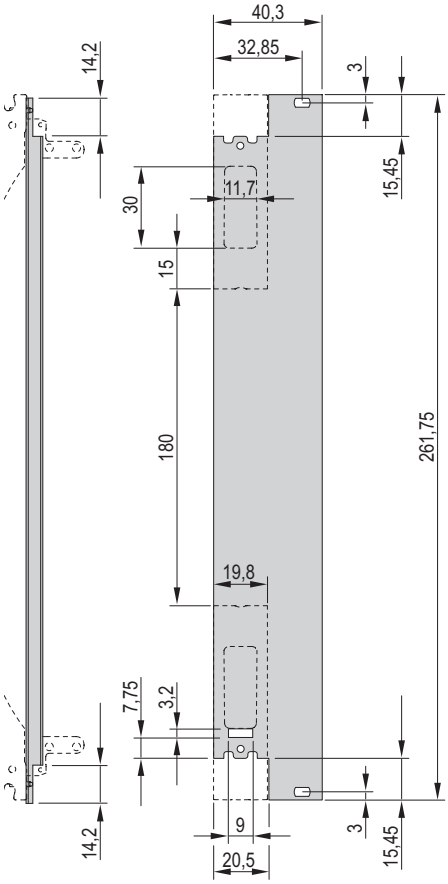

04605054

6 U/12 HP

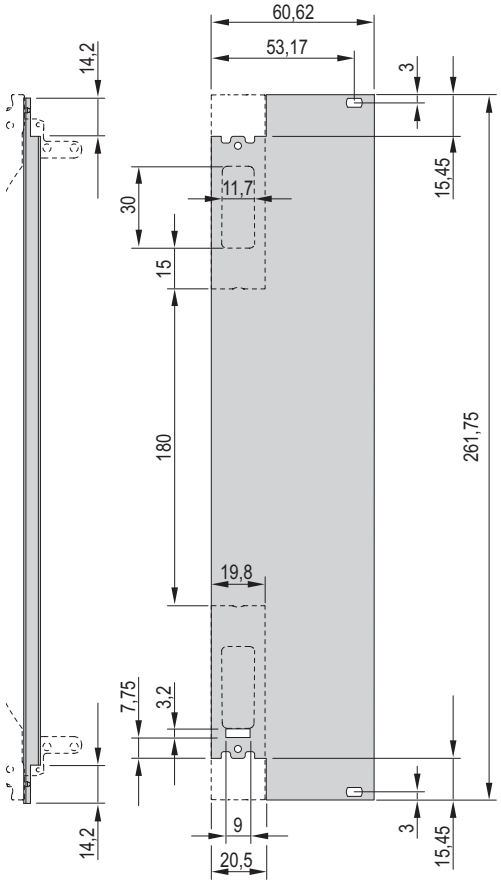

04605055

Dimensions Inserter/extractor handle, type XL

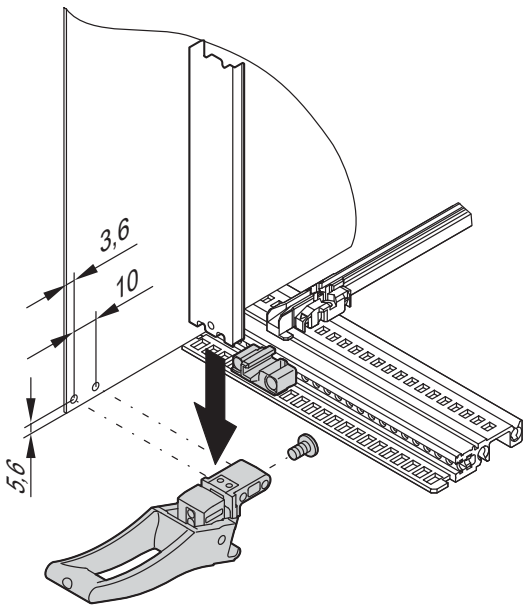

04608113

Plug-in units – for VME

Kits

Plug-in units with trapeziform extractor handle, type 2

3 U

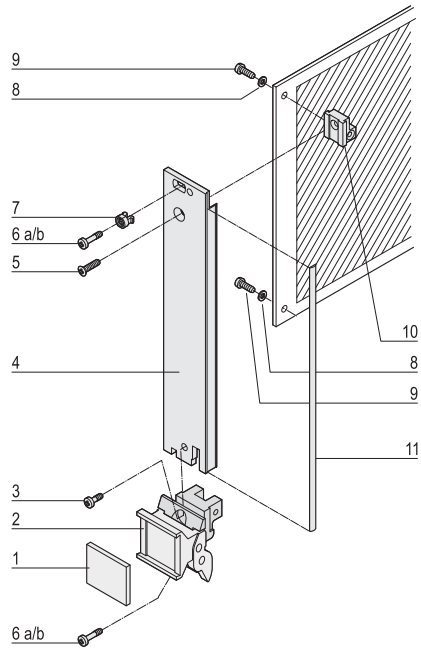

04604050

6 U

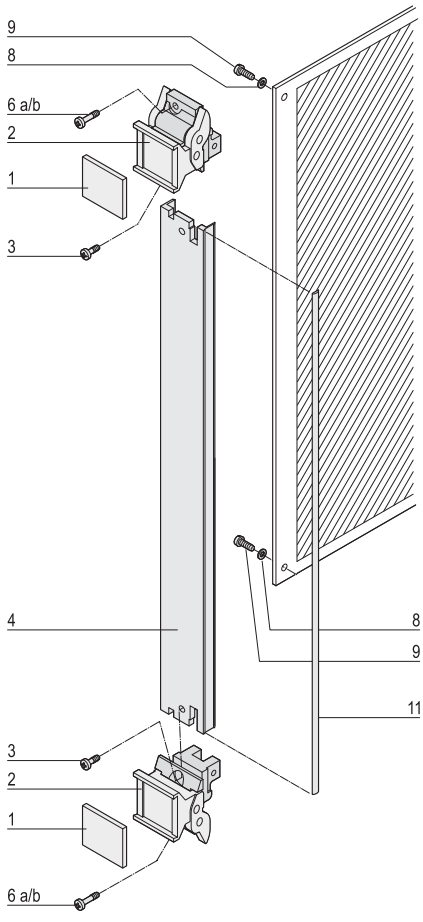

04604051

■ Shielded

Delivery comprises (kit)

Item	Qty				Description
	3 U		6 U		
	<8HP	≥8HP	<8HP	≥8HP	
1	1	1	2	2	Identification plate, Al, 1.5 mm, anodised, cut edges untreated
2	1	1	2	2	Extractor handle, trapeziform, type 2, lever: PPE, light grey, RAL 7035, block die-cast zinc, nickel-plated, with integrated alignment pin for perforated strip
3	1	1	2	2	Pozidrive flathead screw, St, M2.5 x 6, nickel-plated
4	1	1	1	1	Front panel, U profile, Al, front anodised, rear conductive
5	1	1	–	–	Raised Pozidrive countersunk screw M2.5 × 8, St, nickel-plated
6a	2	4	2	4	Pozidrive collar screw, M2.5 × 12.3, St, nickel-plated,
6b	2	4	2	4	collar screw, Pozidrive/slot, M2.5 × 11, St, nickel-plated,
7	1	3	–	2	Sleeve, PA, grey
8	2	2	2	2	Washer A 2.7, DIN 125
9	2	2	2	2	Panhead screw with Torx/slot, M2.5 x 6, St, zinc-plated, self-locking
10	1	1	–	–	Board support, die-cast zinc
11	1	1	1	1	EMC sealing (textile), core: foam, sleeve: textile cladding, Cu-Ni coated

Order Information

Height	Width	Part no.
U	HP	
3	4	**20848-686**
3	6	**20848-687**
3	8	**20848-688**
3	10	20848-689
3	12	20848-690
6	4	**20848-691**
6	6	**20848-692**
6	8	**20848-693**
6	10	20848-694
6	12	20848-695

■ Dimension drawings of front profile see page 7.38
■ Description of microswitch see page 7.31

Plug-in units – for VME

Kits

3 U

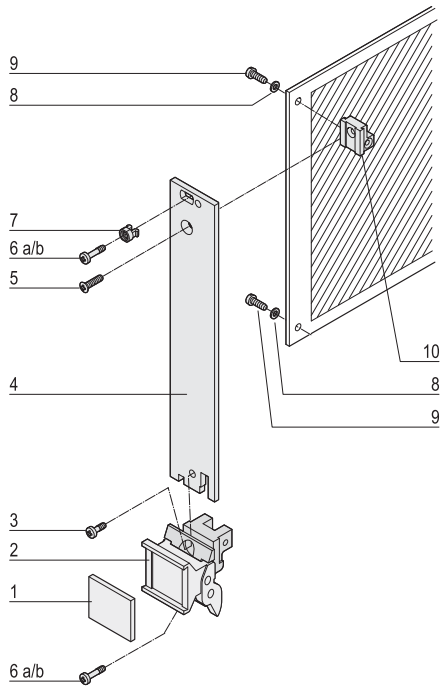

04604052

6 U

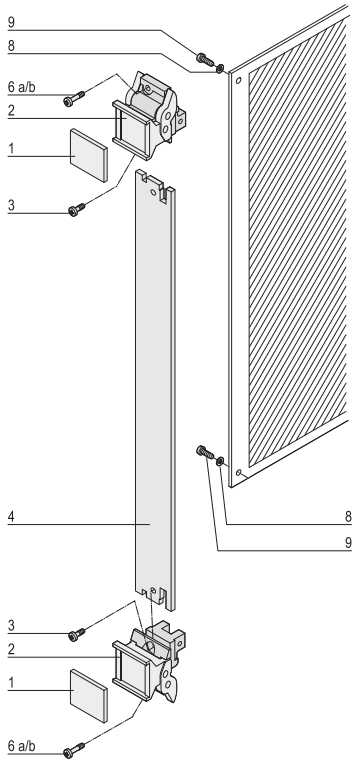

04604053

Plug-in units with trapeziform extractor handle, type 2

■ Unshielded

Delivery comprises (kit)

Item	Qty 3 U <8HP	Qty 3 U ≥8HP	Qty 6 U <8HP	Qty 6 U 8 HP	Description
1	1	1	2	2	Identification plate, Al, 1.5 mm, anodised, cut edges plain
2	1	1	2	2	Extractor handle, trapeziform, type 2, lever: PPE, light grey, RAL 7035, block: die-cast zinc, nickel-plated
3	1	1	2	2	Flathead screw M2.5 x 6, nickel-plated
4	1	1	1	1	Front panel, Al, 2.5 mm, front: anodised, rear: irisdescent green chromated
5	1	1	–	–	Raised Pozidrive countersunk screw, M2.5 × 8, St, nickel-plated
6a	2	4	2	4	Slotted Pozidrive collar screw, M2.5 x 12.3, St, nickel-plated,
6b	2	4	2	4	slotted Pozidrive collar screw, M2.5 x 11, St, nickel-plated
7	1	3	–	2	Sleeve, PA, grey
8	2	2	2	2	Washer A 2.7, DIN 125
9	2	2	2	2	Slotted Torx panhead screw, M2.5 x 6, St, zinc-plated, self-locking
10	1	1	–	–	Board support, die-cast zinc

Order Information

Height U	Width HP	Part no.
3	4	**20817-860**
3	5	**20817-861**
3	6	**20817-862**
3	7	**20817-863**
3	8	**20817-864**
3	10	**20817-865**
3	12	**20817-866**
6	4	**20817-867**
6	5	**20817-868**
6	6	**20817-869**
6	7	**20817-870**
6	8	**20817-871**
6	10	20817-872
6	12	20817-873

■ Dimension drawing of front profile see page 7.38

■ Description of microswitch see page 7.31

Plug-in units – for VME

Individual components — U front profiles/front panels for trapeziform extractor handle, type 2

Order Information

	Width HP	Front panel, U profile, shieldable	Textile EMC gasket		Front panel, flat, unshielded
		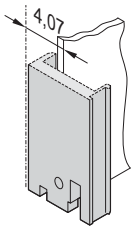 04608060	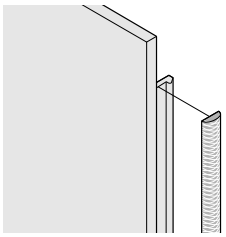 BGA45760		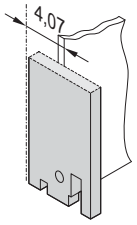 04608063
		Al extrusion, 2.5 mm, front anodised, rear conductive; alignment pin pressed-in (3 U only), stainless steel; manufacturing process causes various surface structures to appear between 4 to 12 HP and 14 to 16 HP	always fixed laterally on the front panel, in the groove of the profile, textile gasket, core: foam, sleeve: textile cladding with CuNi coating, UL 94 V-0, temperature range -40 ... 70 °C		Front panel, Al, 2.5 mm, front anodised, rear irisdescent green chromated
		1 piece (SPQ 5)[1]	PU 10 pieces	PU 100 pieces	1 piece (SPQ 5)[1]
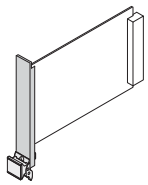 04608109		**3 U Height**			
	4	**30848-312**	**21101-853**	**21101-854**	**30848-327**
	5	**30848-300**			**30848-328**
	6	**30848-313**			**30848-329**
	7	**30848-301**			**30848-330**
	8	**30848-314**			**30848-331**
	10	**30848-315**			**30848-333**
	12	**30848-316**			**30848-335**
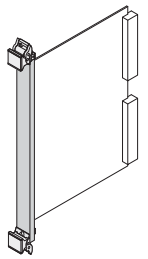 04608107		**6 U Height**			
	4	**30848-317**	**21101-855**	**21101-856**	**30848-336**
	5	**30848-304**			**30848-337**
	6	**30848-318**			**30848-338**
	7	**30848-305**			**30848-339**
	8	**30848-319**			**30848-340**
	10	**30848-320**			**30848-342**
	12	**30848-321**			**30848-344**
Dimensions see page		7.38			7.36

1) SPQ (standard pack quantity): Part number includes 1 piece, but delivery is exclusively made in standard pack quantity (SPQ); please order at least the SPQ quantity or a multiple

Part no. includes one packing unit (PU); delivery is exclusively made in PU

Plug-in units – for VME

Individual components — Extractor handle, trapeziform, type 2

Order Information

	Trapeziform extractor handle, type 2 without alignment pin			Trapeziform extractor handle, type 2 with alignment pin		
	lever, light grey, RAL 7035	lever, dark grey, RAL 7032	lever, black, RAL 9005	lever, light grey, RAL 7035	lever, dark grey, RAL 7032	lever, black, RAL 9005
	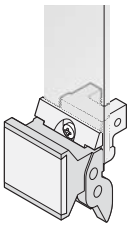 04608085	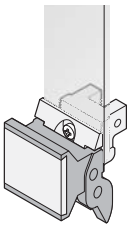 BGA45760	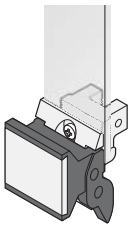 04608087	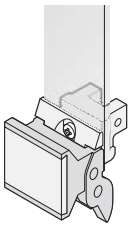 BGA45760	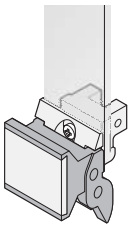 04608086	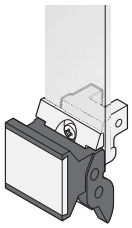 04608087
	Extractor handle, PPE; block, die-cast zinc, zinc-plated; identification plate, Al, 1.5 mm, anodised, cut edges plain; Pozidrive flat-head screw, M2.5 x 6, nickel-plated; slotted Pozidrive collar screw, M2.5 x 12.3, St, nickel-plated; slotted Pozidrive collar screw, M2.5 × 11, St, nickel-plated,			Extractor handle, PPE; block, die-cast zinc, zinc-plated; Identification plate, Al, 1.5 mm, anodised, cut edges plain; Pozidrive flat-head screw, M2.5 x 6, nickel-plated; slotted Pozidrive collar screw, M2.5 x 12.3, St, nickel-plated; slotted Pozidrive collar screw, M2.5 × 11, St, nickel-plated,		
Width HP	1 piece (SPQ 10)[1]	1 piece (SPQ 10)[1]	1 piece (SPQ 10)[1]	1 piece (SPQ 10)[1]	1 piece (SPQ 10)[1]	1 piece (SPQ 10)[1]
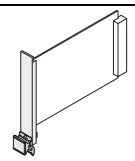 04608114	**3 U Height** bottom					
	20817-858	**20817-854**	**20817-856**	**20817-833**	20817-829	**20817-831**
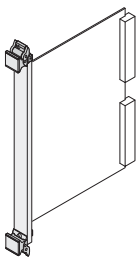 04608115	**6 U Height** top					
	20817-858	**20817-854**	**20817-856**	**20817-833**	20817-829	**20817-831**
	bottom					
	20817-858	**20817-854**	**20817-856**	**20817-833**	20817-829	**20817-831**
Dimensions see page	7.39			7.39		

1) SPQ (standard pack quantity): Part number includes 1 piece, but delivery is exclusively made in standard pack quantity (SPQ); please order at least the SPQ quantity or a multiple

Part no. includes one packing unit (PU); delivery is exclusively made in PU

Plug-in units – for VME

Individual components | **Fixing material for trapeziform extractor handle, type 2**

Order Information

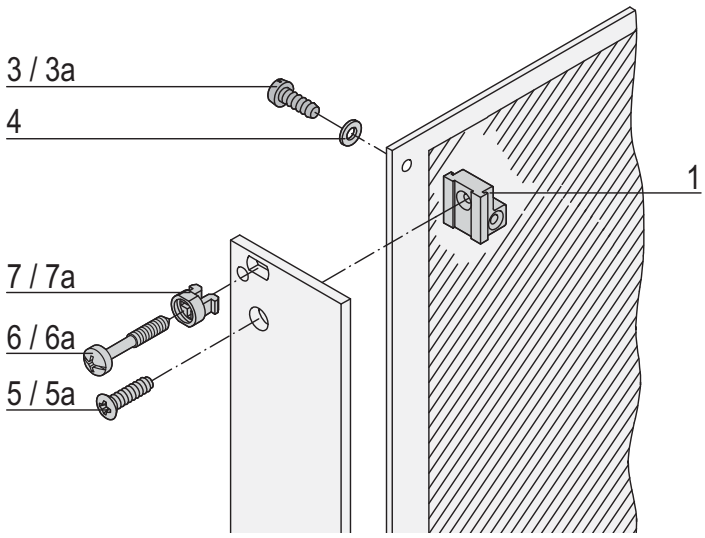

Fixing material	Item		Required quantity 3 U < 8 HP	Required quantity 3 U ⩾ 8 HP	Required quantity 6 U < 8 HP	Required quantity 6 U ⩾ 8 HP	Qty/PU	Part no.
Printed board bracket Zn die-cast	1	06707050	1	1	–	–	1 Stück (LLG 10)[1)]	**60807-181**
Pozidrive panhead screw M2.5 × 6, St, nickel-plated	3	AZA45177	2	2	2	2	100	**21101-219**
Slotted panhead screw with Torx 8 M2.5 × 6, St, zinc-plated Self-securing thread	3a	aza45940	2	2	2	2	100	**24560-159**
Washer 2.7, St, nickel-plated	4	AZA46586	2	2	2	2	100	**21100-721**
Raised Pozidrive countersunk panhead screw M2.5 × 8, St, nickel-plated	5	06702056	1	1	–	–	100	**21100-429**
Raised countersunk panhead screw with Torx 8 M2.5 × 8, St, nickel-plated	5a	06708050	1	1	–	–	100	**24560-164**
Slotted Pozidrive collar screw M2.5 × 11, St, nickel-plated AZA46586	6	AZA46586	1	3	–	2	100	**21100-748**
Slotted Pozidrive collar screw M2.5 × 12.3, St, nickel-plated AZA46586	6a	AZA46586	1	3	–	2	100	**21101-101**
Plastic sleeve, for form hole 5.9 x 3.3 PA, UL 90 V-2, grey	7	aza45933	1	3	–	2	100	**21100-464**
Metal sleeve, for form hole 5.9 x 3.3, press-in Stainless steal	7a	aza45934	1	3	–	2	100	**21100-662**

1) SPQ (standard pack quantity): Part number includes 1 piece, but delivery is exclusively made in standard pack quantity (SPQ); please order at least the SPQ quantity or a multiple

Plug-in units – for VME

Dimensions Front panels, U profiles, for trapeziform extractor handles, type 2

3 U

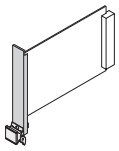

04608109

6 U

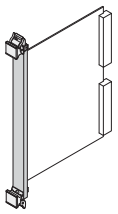

04608107

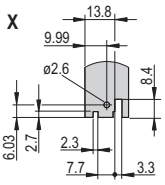

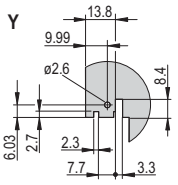

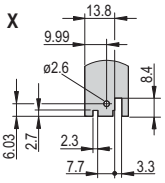

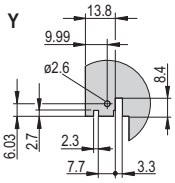

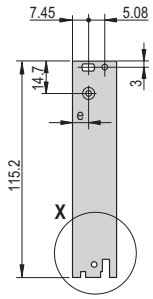

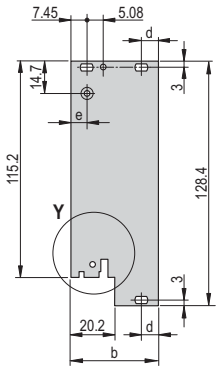

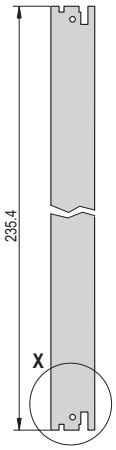

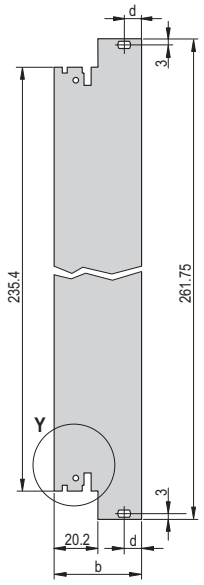

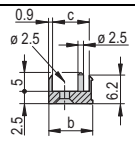

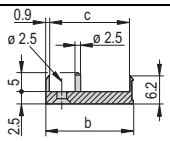

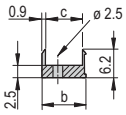

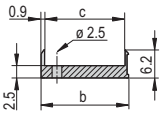

shieldable

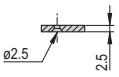

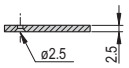

unshielded

04608064 04608077

04608065 04608078

4 HP ≥5 HP 4 HP ≥5 HP

Dimensions table

Width HP	b mm	c mm	d mm
4	19.98	17.45	–
5	25.06	22.53	–
6	30.14	27.61	–
7	35.22	32.69	–
8	40.30	37.77	7.45
9	45.38	42.85	7.45
10	50.46	47.93	7.45
11	55.54	53.01	7.45
12	60.62	58.09	7.45
14	70.78	68.25	7.45
16	80.94	78.41	7.45

Plug-in units – for VME

Dimension drawings Extractor handle, trapeziform, type 2

with alignment pin

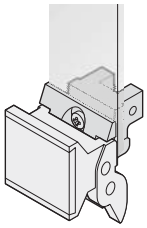

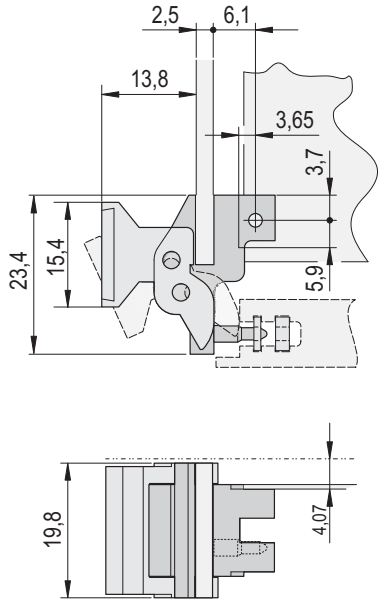

without alignment pin

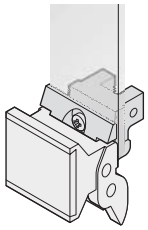

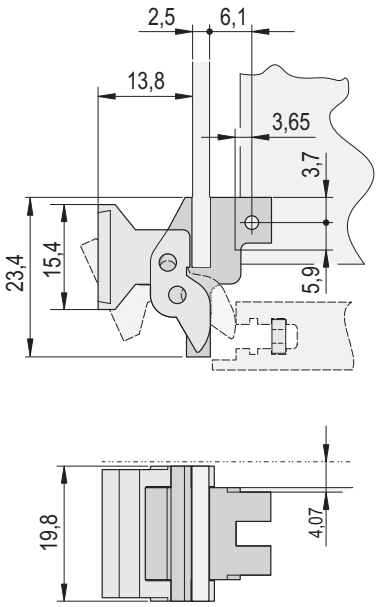

Plug-in units – for VME

Kits

Plug-in units with trapeziform extractor handle, type 1 – front panel, U-profile, shielded

3 U

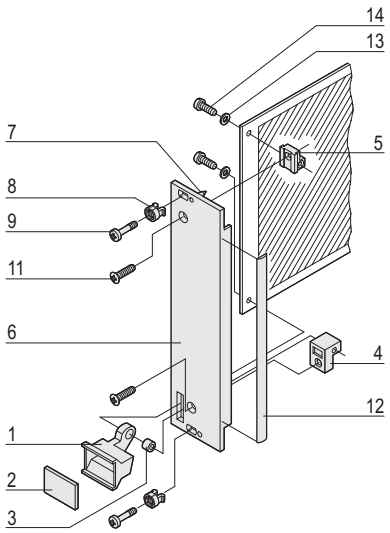

04602058

6 U

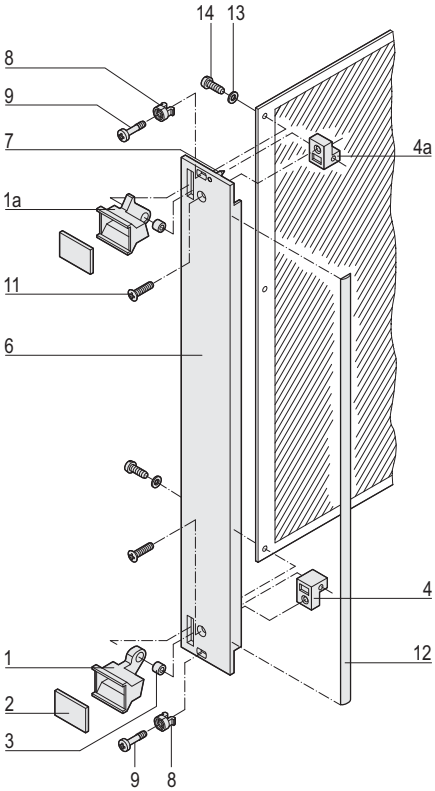

04602059

- At 6 U the board position can be offset by 1 HP to the right by swapping the top and bottom board supports; thus space is created for SMD components on the left (solder) side; for board thickness 1.6 mm only

Delivery comprises (kit)

Item	Qty 3 U	Qty 6 U	Description
1	1	1	Extractor handle, trapeziform type, PPE, grey, bottom
1a	-	1	Extractor handle, trapeziform type, PPE, grey, top
2	1	2	Identification plate, Al, 1.5 mm, anodised, cut edges plain
3	1	2	Pivot bush, Ms
4	1	1	Board support, die-cast zinc, bottom
4a	-	1	Board support, die-cast zinc, top
5	1	-	Board support, die-cast zinc
6	1	1	Front panel, U profile, for trapeziform extractor handle, front anodised, rear conductive
7	2	2	Alignment pin, pressed-in, stainless steel
8	2	2	Sleeve, PA, grey, up to 7 HP front panel width
8	4	4	Sleeve, PA, grey, from 8 HP front panel width
9	2	2	Collar screw, Pozidrive/slot, St, nickel-plated, M2.5 × 12.3, front panel width up to 7 HP
9	4	4	Collar screw, Pozidrive/slot, St, nickel-plated, M2.5 × 12.3, front panel width from 8 HP
11	1	2	Raised countersunk panhead screw, M2.5 × 8
12	1	1	EMC gasket (textile)
13	2	2	Washer, A2.7, DIN 125
14	2	2	Pozidrive flathead screw, St, nickel-plated, M2.5 × 10

Order Information

Width HP	3 U Part no.	6 U Part no.
4	**20848-485**	**20848-492**
6	**20848-487**	**20848-494**
8	**20848-489**	**20848-496**
10	**20848-490**	20848-497
12	**20848-491**	**20848-498**

Note

- Dimension front panel see page 7.45

Plug-in units – for VME

Kits

Plug-in units with trapeziform extractor handle, type 1 – front panel unshielded

3 U

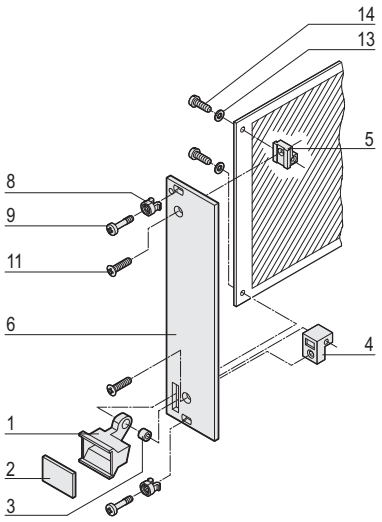

04602060

6 U

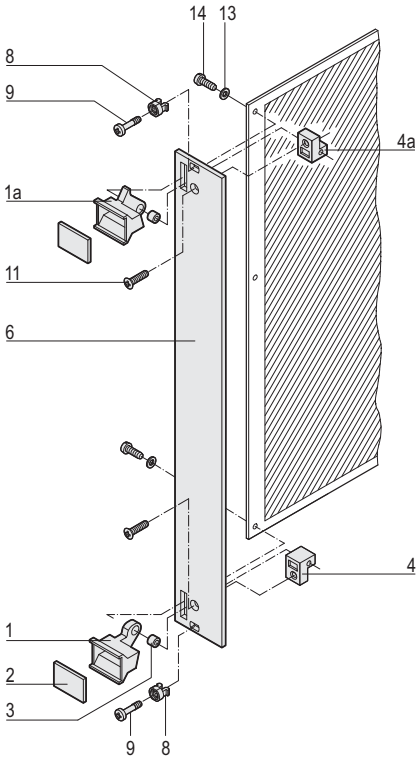

04602061

- At 6 U the board position can be offset by 1 HP to the right by swapping the top and bottom board supports; thus space is created for SMD components on the left (solder) side; for board thickness 1.6 mm only

Delivery comprises (kit)

Item	Qty 3 U	Qty 6 U	Description
1	1	1	Extractor handle, trapezium shape, PPE, grey, bottom
1a	–	1	Extractor handle, trapezium shape, PPE, grey, top
2	1	2	Identification plate, Al, 1.5 mm, anodised, cut edges plain
3	1	2	Pivot bush, Ms
4	1	1	Board support, die-cast zinc, bottom
4a	–	1	Board support, die-cast zinc, top
5	1	–	Board support, die-cast zinc
6	1	1	Front panel for trapeziform extractor handle, front anodised, rear irisdescent green chromated
8	2	2	Sleeve, PA, grey, up to 7 HP front panel width
8	4	4	Sleeve, PA, grey, from 8 HP front panel width
9	2	2	Collar screw, Pozidrive/slot, St, nickel-plated, M2.5 × 11 and 12.3, front panel width up to 7 HP
9	4	4	Collar screw, Pozidrive/slot, St, nickel-plated, M2.5 × 11 and 12.3, front panel width from 8 HP
11	1	2	Raised countersunk panhead screw, M2.5 × 8
13	2	2	Washer, A2.7, DIN 125
14	2	2	Pozidrive flathead screw, St, nickel-plated, M2.5 × 10

Order Information

Width HP	3 U Part no.	6 U Part no.
4	**20817-443**	**20817-448**
5	**20817-444**	**20817-449**
6	**20817-445**	**20817-450**
7	**20817-446**	**20817-451**
8	**20817-447**	**20817-452**
10	**20817-456**	**20817-458**
12	**20817-457**	**20817-459**

Note

- Dimension front panel see page 7.45

Plug-in units – for VME

Individual components — Front panels and EMC gaskets, for trapezoidal extractor handle, type 1

Order Information

	Width HP	Front panel, U profile, shieldable 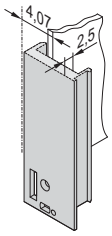 04608091 Al profile, front anodised, rear conductive, alignment pin pressed-in, stainless steel 1 piece (SPQ 5)[1)]	Textile EMC gasket 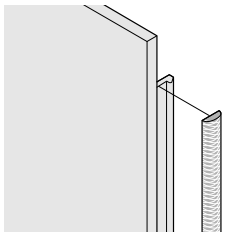 BGA45760 always fixed laterally on the front panel, in the groove of the profile, textile gasket, core: foam, sleeve: textile cladding with CuNi coating, UL 94 V-0, temperature range -40 ... 70 °C PU 10 pieces	PU 100 pieces	Front panel, unshielded 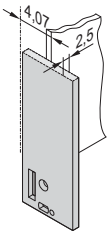 04608092 front panel, Al, 2.5 mm, front anodised, rear irisdescent green chromated 1 piece (SPQ 5)[1)]
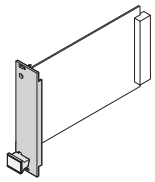 04608117		**3 U Height**			
	4	**30848-461**	**21101-853**	**21101-854**	**30847-659**
	5	–			**30847-660**
	6	**30848-463**			**30847-661**
	7	–			**30847-662**
	8	**30848-465**			**30847-663**
	10	**30848-466**			**30847-664**
	12	**30848-467**			**30847-665**
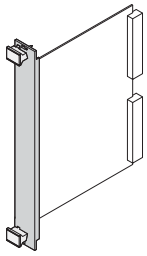 04608116		**6 U Height**			
	4	**30848-468**	**21101-855**	**21101-856**	**30847-666**
	5	–			**30847-667**
	6	**30848-470**			**30847-668**
	7	–			**30847-669**
	8	**30848-472**			**30847-670**
	10	**30848-473**			**30847-671**
	12	**30848-474**			**30847-672**
Dimensions see page		7.45			7.45

1) SPQ (standard pack quantity): Part number includes 1 piece, but delivery is exclusively made in standard pack quantity (SPQ); please order at least the SPQ quantity or a multiple
Part no. includes one packing unit (PU); delivery is exclusively made in PU

Plug-in units – for VME

Individual components — Trapeziform extractor handles, type 1

Order Information

Width HP	Trapeziform extractor handle black	Trapeziform extractor handle grey
	04608093	04608094
	handle closed laterally, PPE, UL 94 V-1, black; pivot bush; identification plate, Al, 1.5 mm, anodised, cut edges plain; board support die-cast zinc; in the 6 U version, space can be created for SMD components on the left side by swapping the top and bottom handles and thus moving the PCB position 1 HP to the right	
	1 piece (SPQ 10)[1)]	1 piece (SPQ 10)[1)]
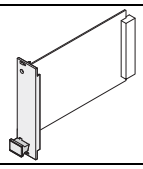 04608119	**3 U Height** top	
	20817-329	**20817-327**
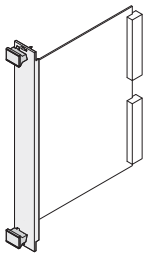 04608118	**6 U Height** top	
	20817-330	**20817-328**
	bottom	
	20817-329	**20817-327**

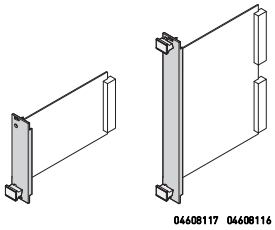

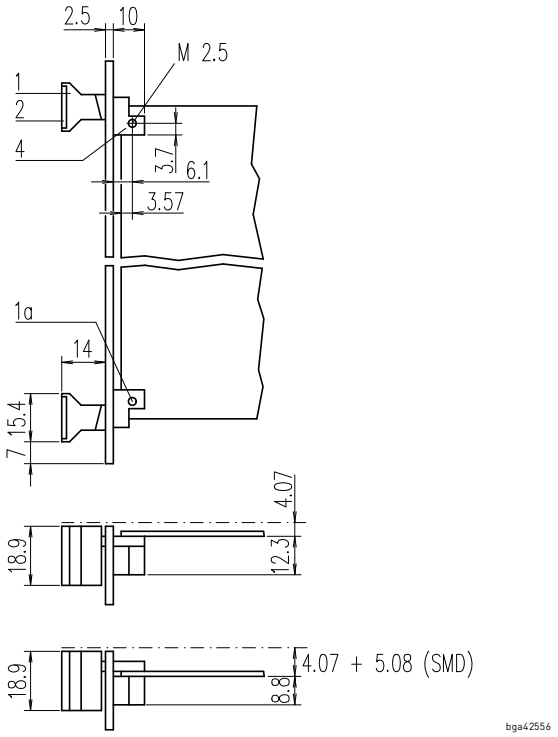

1) SPQ (standard pack quantity): Part number includes 1 piece, but delivery is exclusively made in standard pack quantity (SPQ); please order at least the SPQ quantity or a multiple

Plug-in units – for VME

Individual components — Fixing material for trapeziform extractor handle, type 1

Order Information

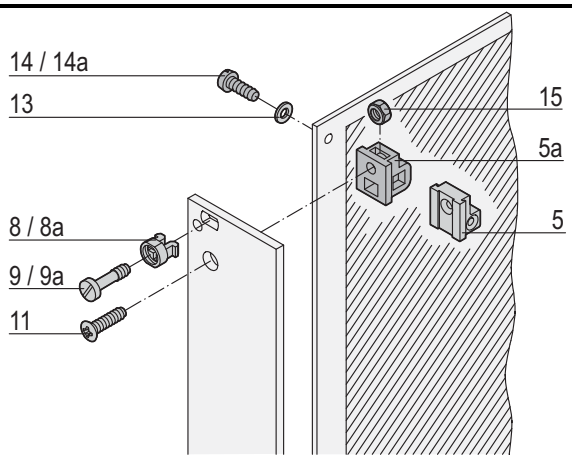

Fixing material	Item		Required Qty 3 U < 8 HP	Required Qty 3 U ⩾ 8 HP	Required Qty 6 U < 8 HP	Required Qty 6 U ⩾ 8 HP	Qty/PU	Part no.
Board support, die-cast zinc, with thread M2.5, for front panel and PCB fixing	5	06707050	1	2	2	4	1 piece (SPQ 10)[1]	**60807-181**
Board support, plastic, PBT, UL 94 V-0, grey, with recess for hexagon nut M2.5, for fixing front panel	5a	AZA45177	1	2	2	4	1 piece (SPQ 10)[1]	**60807-183**
Plastic sleeve, for form hole 5.9 x 3.3 PA, UL 90 V-2, grey	8	aza45933	2	4	2	4	100	**21100-464**
Metal sleeve, for form hole 5.9 x 3.3, press-in Stainless steal	8a	aza45934	2	4	–	–	100	**21100-662**
Pozidrive/slotted collar screw M2.5 × 11, St, nickel-plated	9	AZA46586	2	4	2	4	100	**21100-748**
Pozidrive/slotted collar screw M2.5 × 12.3, St, nickel-plated	9a	AZA46586	2	4	2	4	100	**21101-101**
Raised Pozidrive countersunk screw M2.5 × 8, St, nickel-plated	11	06702056	2	2	2	2	100	**21100-429**
Washer 2.7 DIN 125, St, nickel-plated, 100 pieces	13	AZA46586	2	2	2	2	100	**21100-721**
Pozidrive panhead screw M2.5 × 10, St, nickel-plated for item 5	14	AZA45177	2	2	2	2	100	**21101-220**
Panhead screw, self-tapping 2.5 x 8, St, zinc-plated for item 5b	14a	06702057	1	1	–	–	100	**21100-710**
Hexagon nut M2.5, nickel-plated steel for item 5b	15	aza43239	1	1	–	–	100	**21100-144**

1) SPQ (standard pack quantity): Part number includes 1 piece, but delivery is exclusively made in standard pack quantity (SPQ); please order at least the SPQ quantity or a multiple

Plug-in units – for VME

Dimensions — Front panels for trapezoidal extractor handles, type 1, shielded/unshielded

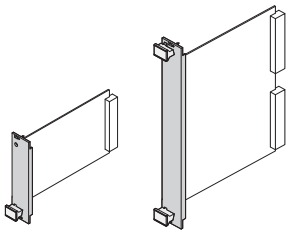

04608117 04608116

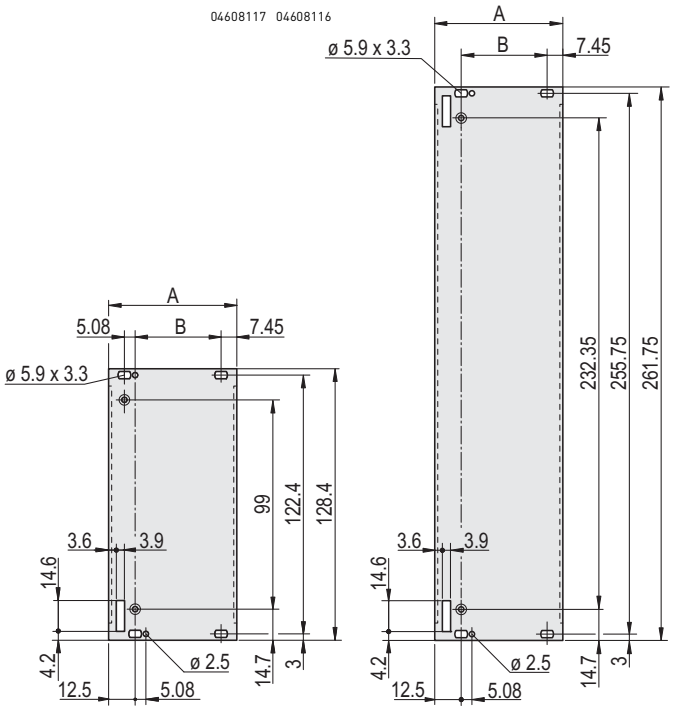

04603054

3 U 6 U

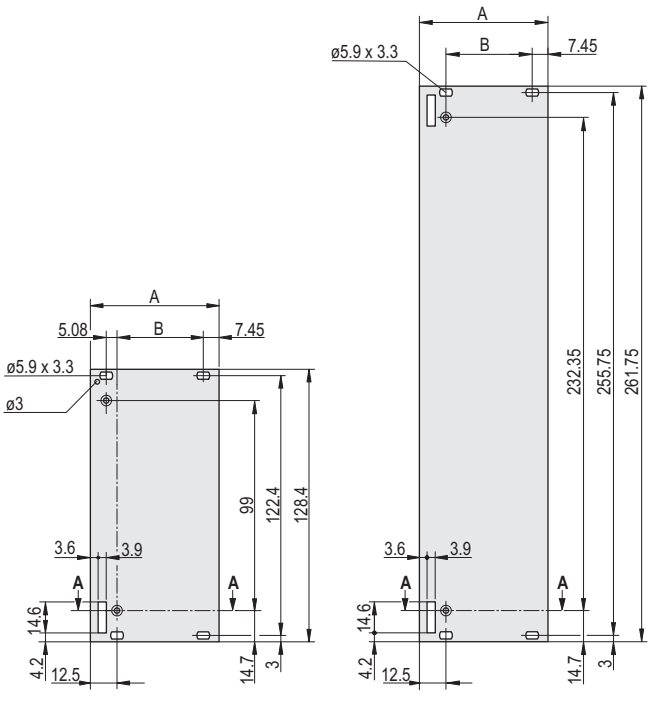

04603063

3 U 6 U

Dimensions table

Width HP	A mm	B mm
4	19.98	-
5	25.06	-
6	30.14	-
7	35.22	-
8	40.30	20.32
10	50.46	30.48
12	60.62	40.64

Individual components — Front panels/extractor handles for Multibus® II, symmetrical/SMDversion

Order Information

	Width HP	U front profile 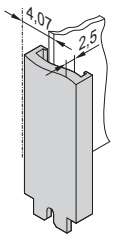 04608095 Al extrusion, 1 mm 1 piece (SPQ 5)[1]	Mounting block for D-Sub connector (50 pin) 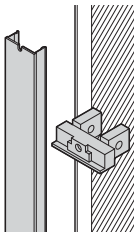 04608098 for fixing D-Sub connectors 50-pin, thread on front UNC4/40; required quantity: for 6 U 1x, for 9 U 2x 1 piece (SPQ 10)[1]	Extractor handle for Multibus® II symmetrical handle grey, RAL 7032 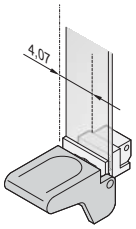 04608099 extractor handle for Multibus® II, PC, UL 94 V-0; bearing, Zn die-cast, nickel-plated; slotted cheesehead screw, M2.5 x 6, Pozidrive/slotted collar screw, M2.5 × 12.3, St, nickel-plated in the 6 U version, space can be created for SMD components on the left side by swapping the top and bottom handles and thus moving the PCB position 1 HP to the right 1 piece (SPQ 10)[1]	SMD handle grey, RAL 7032 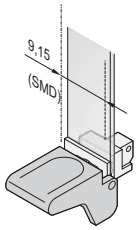 04608108 1 piece (SPQ 10)[1]
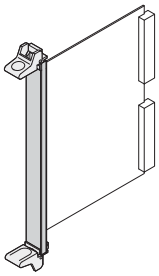 04608120		6 U Height		6 U Height top	
	4	30829-001	60829-008	20829-011	20829-004
				bottom	
				20829-011	20829-003
		9 U Height		9 U Height top	
	4	30829-007	60829-008	20829-011	20829-004
				bottom	
				20829-011	20829-003
Dimensions see page		7.47	7.47	7.47	7.47

1) SPQ (standard pack quantity): Part number includes 1 piece, but delivery is exclusively made in standard pack quantity (SPQ); please order at least the SPQ quantity or a multiple
Part no. includes one packing unit (PU); delivery is exclusively made in PU

Plug-in units – for Multibus II

Dimension drawings Front panels, U profile / front panel for Multibus® II

6/9 U

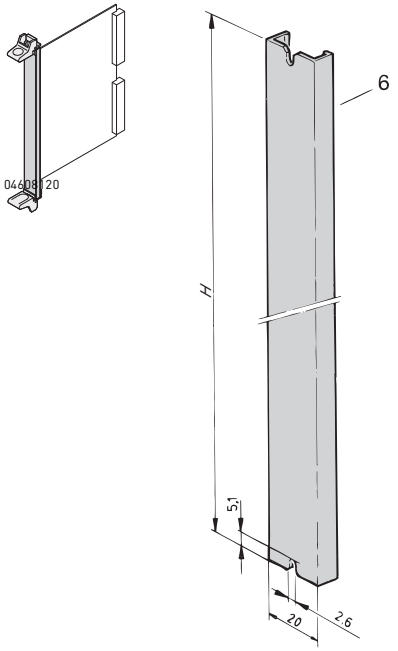

Dimensions table

Height U	Height mm
6	230.4
9	363.7

A4-2580

6 U

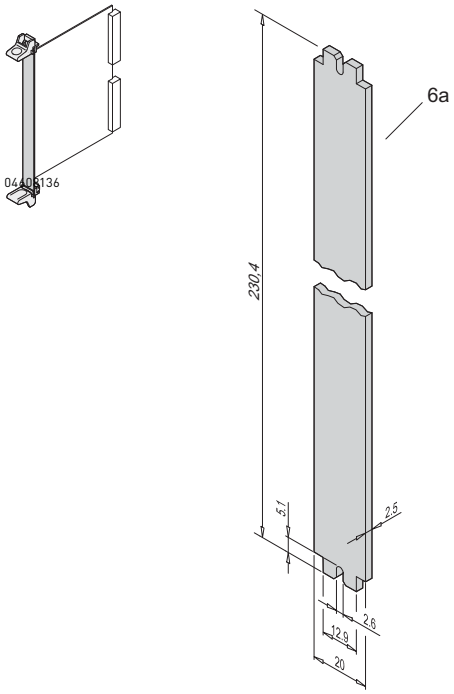

BGA46120

Dimensions Extractor handles, mounting block for Multibus® II

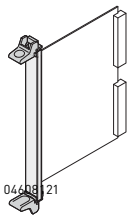

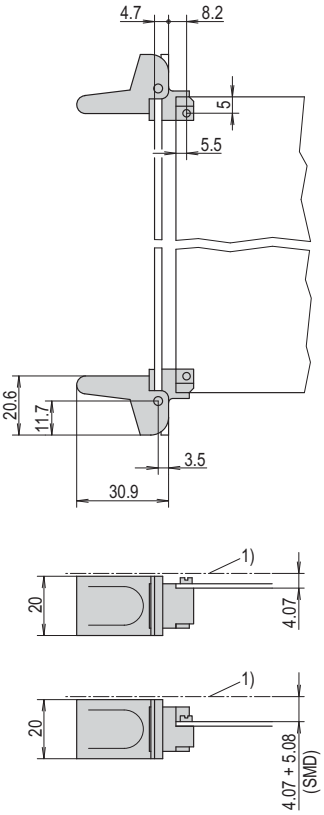

gba42579

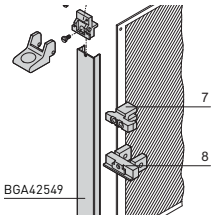

for D-Sub connector (50 pin)

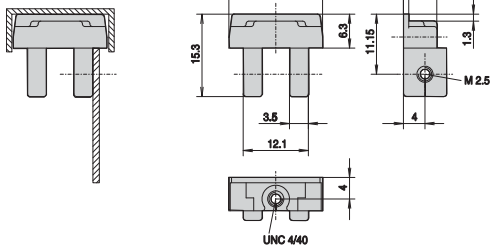

BGA42585

Plug-in units – for IEC 60297, key form 1

Individual components — Extractor handles in key form 1

Order Information

	Extractor handle		Front panel	Fixing clip
	black	grey		
	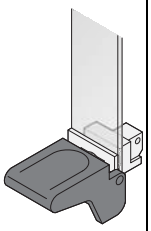 04608101	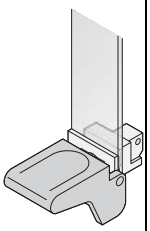 04608102	04608103	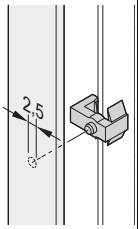 bga42544
	extractor handle in key form 1, PC, UL 94 V-0; bearing Zn die-cast, nickel-plated; slotted cheesehead screw, M2.5 x 6 (fitted); in the 6 U version, space can be created for SMD components on the left side by swapping the top and bottom handles and thus moving the PCB position 1 HP to the right		Al, 2.5 mm; available on request	for fixing PCB to the front panel (blind hole X2.6, depth 1.3 mm); also for SMD applications; clip, PPE, UL 94 V-0, red
Width HP	1 piece (SPQ 10)[1]	1 piece (SPQ 10)[1]		PU 100 pieces
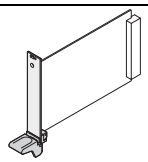 04608123	**3 U Height** bottom			
	20817-345	**20817-325**	–	–
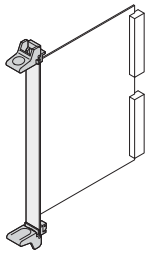 04608122	**6 U Height** top			
	20817-346	**20817-326**	–	**21100-719**
	bottom			
	20817-345	**20817-325**	–	
Dimensions see page	7.50	7.50	7.50	

1) SPQ (standard pack quantity): Part number includes 1 piece, but delivery is exclusively made in standard pack quantity (SPQ); please order at least the SPQ quantity or a multiple

Part no. includes one packing unit (PU); delivery is exclusively made in PU

Plug-in units – for IEC 60297, key form 1

Individual components — Fixing material for extractor handle in key form 1

Order Information

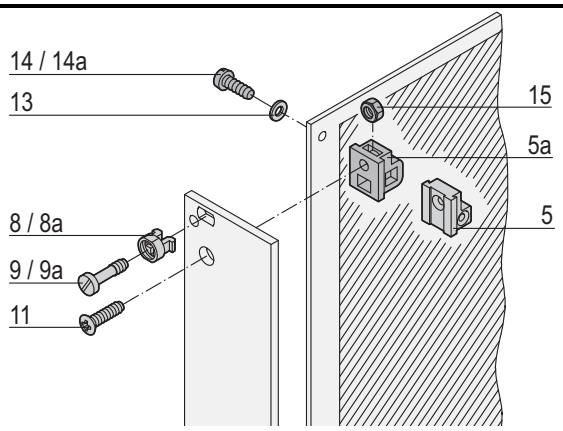

bga42545

Fixing material	Item		Required Qty 3 U	Required Qty 6 U	Qty/PU	Part no.
Board support, die-cast zinc, with thread M2.5, for front panel and PCB fixing	5	06707050	1	–	1 piece (SPQ 10)[1]	**60807-181**
Board support, plastic, PBT, UL 94 V-0, grey, with recess for hexagon nut M2.5, for fixing front panel	5a	AZA45177	1	–	1 piece (SPQ 10)[1]	**60807-183**
Plastic sleeve, for form hole 5.9 x 3.3 PA, UL 90 V-2, grey	8	aza45933	1	–	100	**21100-464**
Metal sleeve, for form hole 5.9 x 3.3, press-in Stainless steal	8a	aza45934	1	–	100	**21100-662**
Pozidrive/slotted collar screw M2.5 × 11, St, nickel-plated AZA46586	9	AZA46586	2	2	100	**21100-748**
Pozidrive/slotted collar screw M2.5 × 12.3, St, nickel-plated AZA46586	9a	AZA46586	2	2	100	**21101-101**
Raised Pozidrive countersunk screw M2.5 × 8, St, nickel-plated	11	06702056	1	–	100	**21100-429**
Washer 2.7 DIN 125, St, nickel-plated, 100 pieces	13	AZA46586	2	2	100	**21100-721**
Pozidrive panhead screw M2.5 × 10, St, nickel-plated for item 5	14	AZA45177	2	2	100	**21101-220**
Pan head screw, self-tapping 2.5 x 8, St, zinc-plated for item 5b	14a	06702057	1	–	100	**21100-710**
Hexagon nut M2.5, nickel-plated steel for item 5b	15	aza43239	3	6	100	**21100-144**

1) SPQ (standard pack quantity): Part number includes 1 piece, but delivery is exclusively made in standard pack quantity (SPQ); please order at least the SPQ quantity or a multiple

Plug-in units – for IEC 60297, key form 1

Dimensions Extractor handles/front panels key form 1

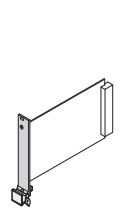

04608089 04603055

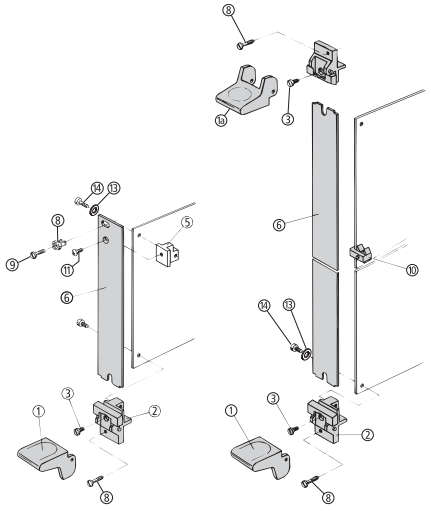

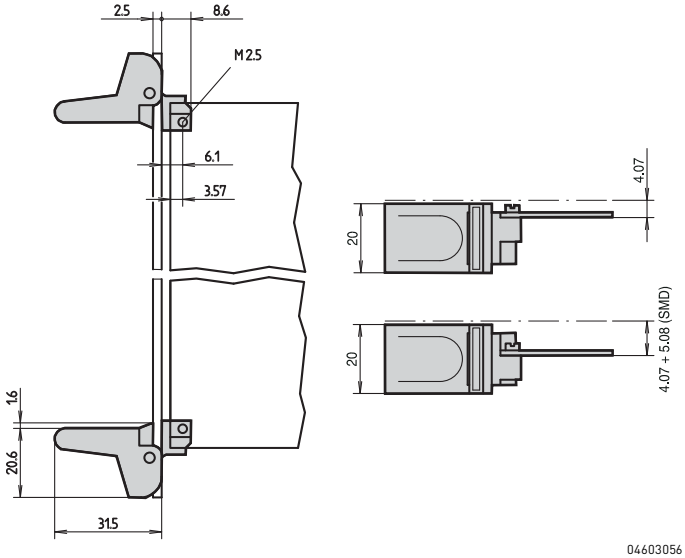

04603056

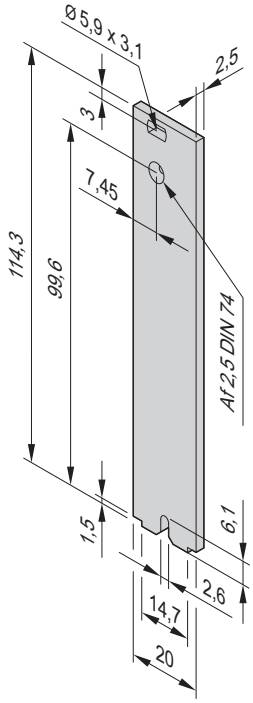

3 U

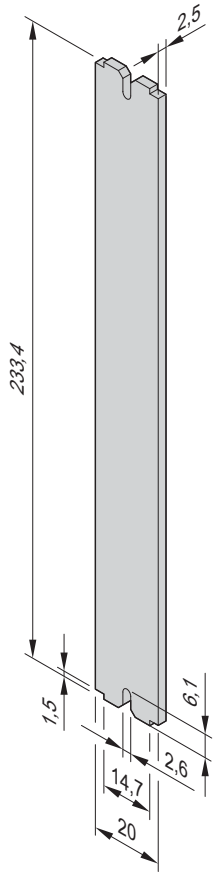

6 U

04603057

Plug-in units – for IEC 60297, key form 2

Individual components Extractor handles in key form 2

Order Information

Width HP	Extractor handle black	Front panel
	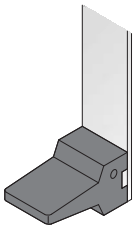 04608104	04608106
	extractor handle, PBT, UL 90 V-0; bearing Zn die-cast, nickel-plated; incl. assembly kit for handle mounting	Al, 2.5 mm; available on request
	1 piece (SPQ 10)[1]	
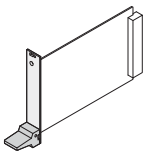 04608124	**3 U Height** top	
	20808-137	–
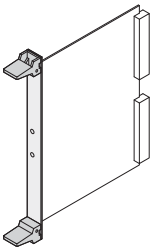 04608125	**6 U Height** top	
	20808-137	–
	bottom	
	20808-137	–
Dimensions see page	7.53	7.53

1) SPQ (standard pack quantity): Part number includes 1 piece, but delivery is exclusively made in standard pack quantity (SPQ);
please order at least the SPQ quantity or a multiple
Part no. includes one packing unit (PU); delivery is exclusively made in PU

Plug-in units – for IEC 60297, key form 2

Fixing material for extractor handles, key form 2

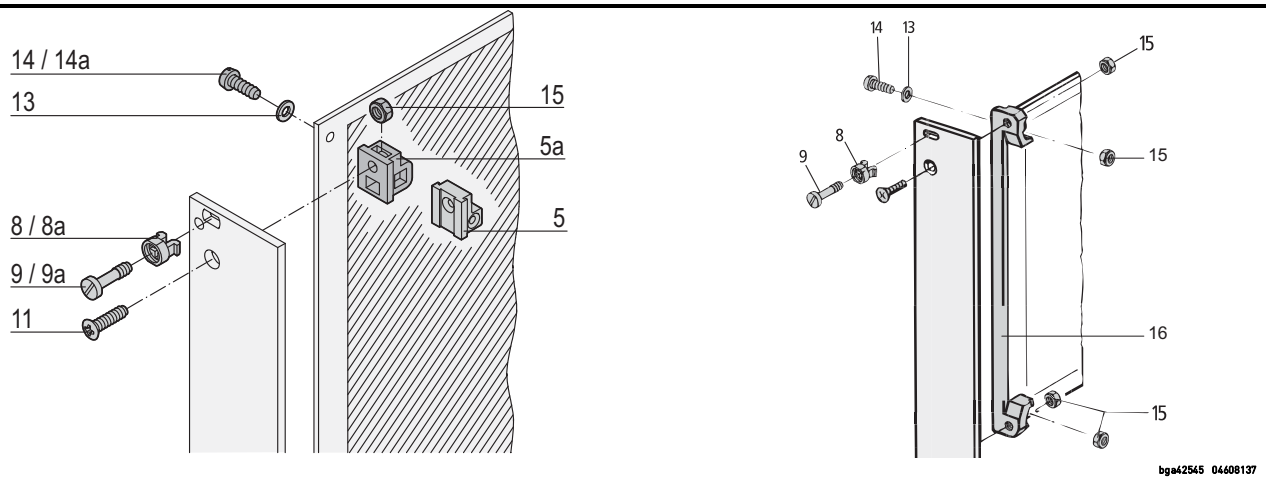

Fixing material	Item		Required Qty		Qty/PU	Part no.
			3 U	6 U		
Board support, die-cast zinc, with thread M2.5, for front panel and PCB fixing	5	06707050	1	2	1 piece (SPQ 10)[1]	**60807-181**
Board support, plastic, PBT, UL 94 V-0, grey, with recess for hexagon nut M2.5, for fixing front panel	5a	AZA45177	1	2	1 piece (SPQ 10)[1]	**60807-183**
Plastic sleeve, for form hole 5.9 x 3.3 PA, UL 90 V-2, grey	8	aza45933	1	–	100	**21100-464**
Metal sleeve, for form hole 5.9 x 3.3, press-in Stainless steal	8a	aza45934	1	–	100	**21100-662**
Pozidrive/slotted collar screw M2.5 × 11, St, nickel-plated	9	AZA46586	2	2	100	**21100-748**
Pozidrive/slotted collar screw M2.5 × 12.3, St, nickel-plated	9a	AZA46586	2	2	100	**21101-101**
Raised Pozidrive countersunk screw M2.5 × 8, St, nickel-plated	11	06702056	1	–	100	**21100-429**
Washer 2.7 DIN 125, St, nickel-plated, 100 pieces	13	AZA46586	2	2	100	**21100-721**
Pozidrive panhead screw M2.5 × 10, St, nickel-plated for item 5	14	AZA45177	2	2	100	**21101-220**
Panhead screw, self-tapping 2.5 x 8, St, zinc-plated for item 5b	14a	06702057	1	–	100	**21100-710**
Hexagon nut M2.5, nickel-plated steel for item 5b	15	aza43239	3	–	100	**21100-144**
PCB bracket 4 clearance holes for front panel/PCB fixing, 4 recesses for hexagon nuts; PBT, UL 94 V?0, red	16	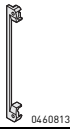 04608138	1	2	1 piece (SPQ 10)	**60807-011**

1) SPQ (standard pack quantity): Part number includes 1 piece, but delivery is exclusively made in standard pack quantity (SPQ); please order at least the SPQ quantity or a multiple

Plug-in units – for IEC 60297, key form 2

Dimensions Handles/front panels key form 2

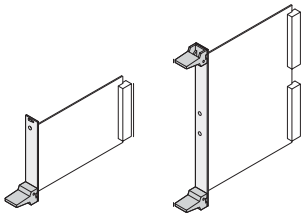

04608124 04608125

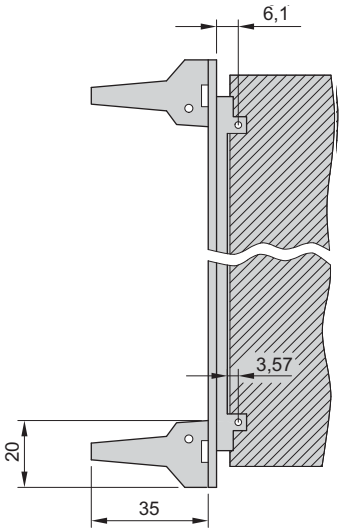

BGA42573

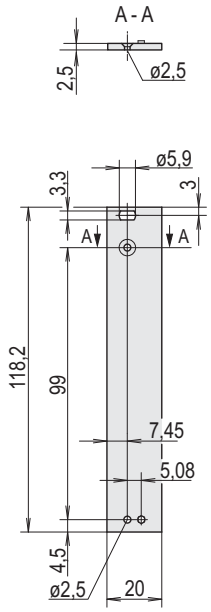

3 U

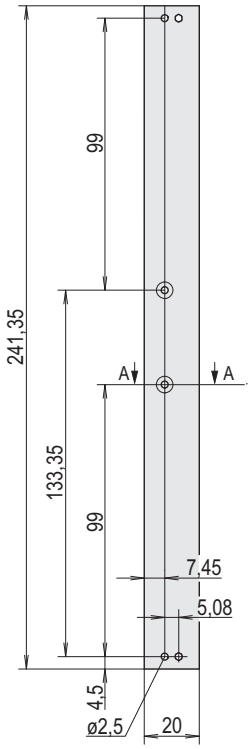

6 U

BGA42578

Dimensions Drill hole dimensions on the PCB key form 2

3 U

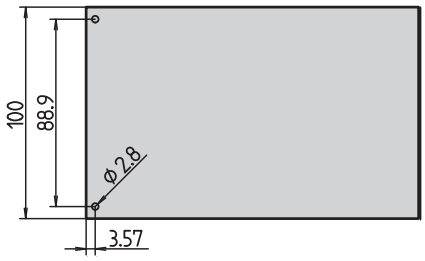

BGA43076

6 U

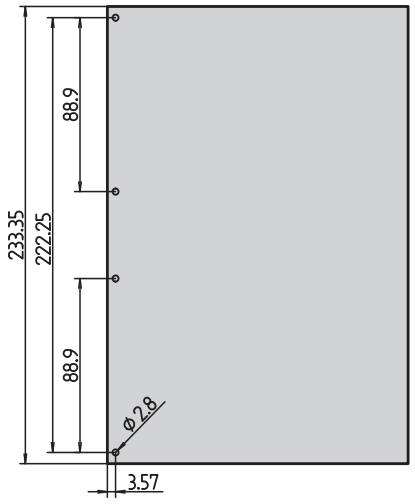

BGA43077

Plug-in units – for IEC 60297, trapeziform

Kits

3 U

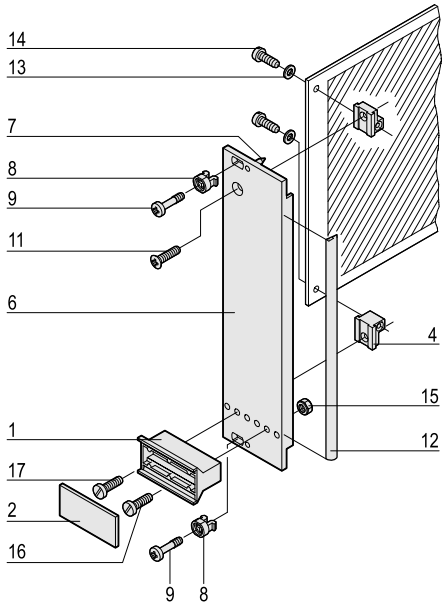

04602062

6 U

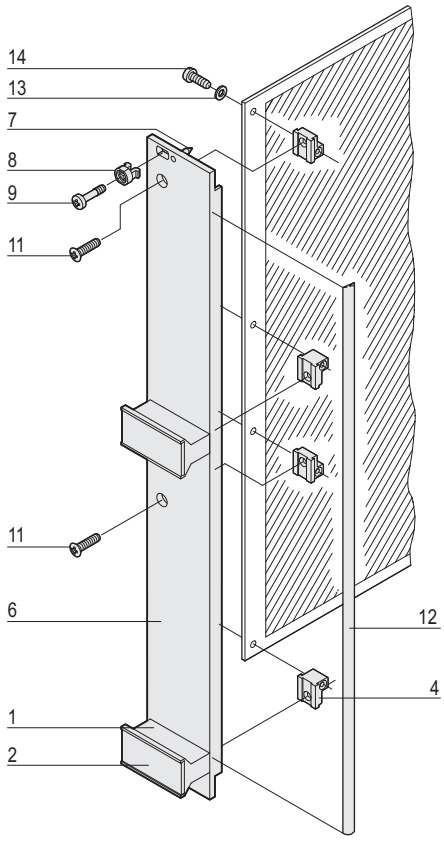

04602063

Plug-in unit with static trapeziform handle

- Front panel, U-profile, shielded
- Handle without extraction function

Delivery comprises

Item	Qty		Description
	3 U	6 U	
1	1	2	Plastic handle, trapeziform, PPE, grey
2	1	2	Identification plate, Al, 1.5 mm, anodised, cut edges plain
4	2	4	Board support, die-cast zinc
6	1	1	Front panel, U profile, for trapeziform handle, front anodised, rear conductive
7	2	2	Alignment pin, pressed-in, stainless steel
8	2	2	Sleeve, PA, grey, up to 7 HP front panel width
8	4	4	Sleeve, PA, grey, from 8 HP front panel width
9	2	2	Pozidrive/slotted collar screw, St, nickel-plated, M2.5 × 11 and 12.3, front panel width up to 7 HP
9	4	4	Pozidrive/slotted collar screw, St, nickel-plated, M2.5 × 11 and 12.3, front panel width from 8 HP
11	1	2	Raised countersunk screw, St, nickel-plated, M2.5 × 8
12	1	1	EMC sealing (textile)
13	2	4	Washer, A2.7, DIN 125
14	2	4	Pozidrive flathead screw, St, nickel-plated, M2.5 × 10
15	1	2	Hexagon nut, St, nickel-plated, M2.5
16	1	2	Pozidrive flathead screw, St, nickel-plated, M2.5 × 12
17	1	2	Pozidrive flathead screw, St, nickel-plated, M2.5 × 16

Order Information

Width	3 U	6 U
HP	Part no.	Part no.
3	**20848-663**	20848-671
4	**20848-664**	**20848-672**
5	**20848-665**	**20848-673**
6	**20848-666**	**20848-674**
7	**20848-667**	20848-675
8	**20848-668**	**20848-676**
10	**20848-669**	**20848-677**
12	**20848-670**	20848-678

Plug-in units – for IEC 60297, trapeziform

Kits

3 U

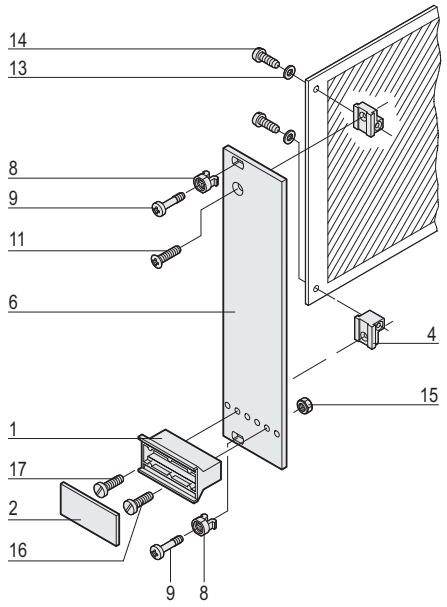

04602064

6 U

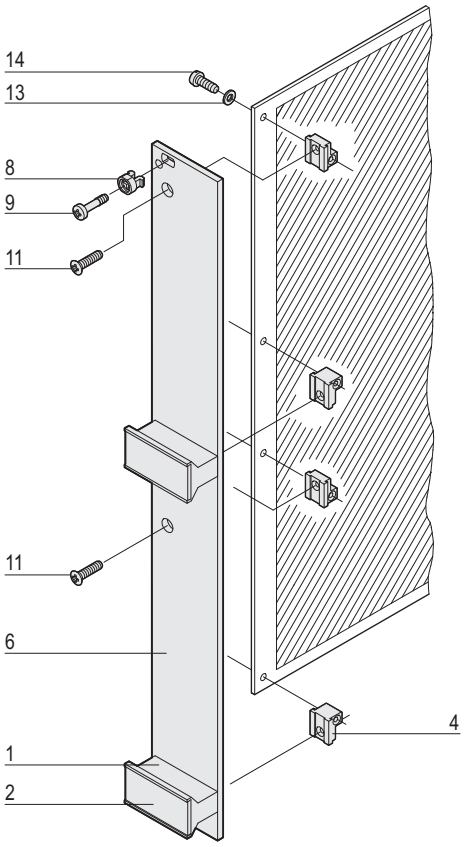

04602065

Plug-in unit with static trapeziform handle

- Front panel unshielded
- Handle without extraction function

Delivery comprises

Item	Qty		Description
	3 U	6 U	
1	1	2	Plastic handle, trapeziform, PPE, grey
2	1	2	Identification plate, Al, 1.5 mm, anodised, cut edges untreated
4	2	4	Board support, die-cast zinc
6	1	1	Front panel for trapeziform handle, front anodised, rear irisdescent green chromated
8	2	2	Sleeve, PA, grey, up to 7 HP front panel width
8	4	4	Sleeve, PA, grey, from 8 HP front panel width
9	2	2	Pozidrive/slotted collar screw, St, nickel-plated, M2.5 × 11 and 12.3, front panel width up to 7 HP
9	4	4	Pozidrive/slotted collar screw, St, nickel-plated, M2.5 × 11 and 12.3, front panel width from 8 HP
11	1	2	Raised countersunk screw, St, nickel-plated, M2.5 × 8
13	2	4	Washer, A2.7
14	2	4	Pozidrive flathead screw, St, nickel-plated, M2.5 × 8
15	1	2	Hexagon nut, St, nickel-plated, M2.5
16	1	2	Pozidrive flathead screw, St, nickel-plated, M2.5 × 12
17	1	2	Pozidrive flathead screw, St, nickel-plated, M2.5 × 16

Order Information

Width	3 U	6 U
HP	Part no.	Part no.
3	**20818-017**	20809-507
4	**20818-018**	**20818-025**
5	**20818-019**	**20818-026**
6	**20818-020**	**20818-027**
7	**20818-021**	**20818-162**
8	**20818-022**	**20818-028**
10	**20818-023**	**20818-029**
12	**20818-024**	**20818-120**

Plug-in units – for IEC 60297, trapeziform

Individual components — Front panels for static cantilever handles

Order Information

		Front panel, U-profile, shieldable			Front panel unshielded
		Front panel, U-profile	Textile EMC gasket		
		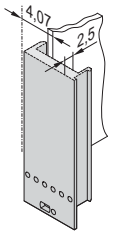 04608130	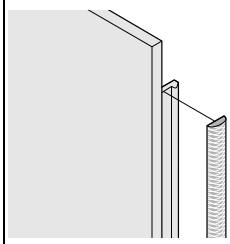 bga45760		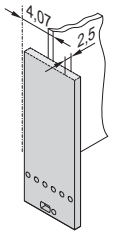 04608131
		Al extrusion, front anodised, rear conductive, alignment pin pressed-in, stainless steel	always fixed laterally on the front panel, in the groove of the profile, textile gasket, core: foam, sleeve: textile cladding with CuNi coating, UL 94 V-0, temperature range -40 ... 70 °C		front panel, Al 2.5 mm; front anodised; rear iridescent green chromated
	Width HP	1 piece (SPQ 5)[1]	PU 10 pieces	PU 100 pieces	1 piece (SPQ 5)[1]
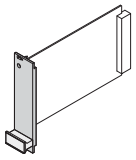 04608126		**3 U Height**			
	3	30849-086	21101-853	21101-854	30847-602
	4	30849-087			30847-603
	5	30849-088			30847-604
	6	30849-089			30847-605
	7	30849-090			30847-606
	8	30849-091			30847-607
	10	30849-092			30847-608
	12	30849-093			30847-609
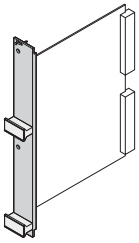 04608127		**6 U Height**			
	3	30849-097	21101-855	21101-856	30847-625
	4	30849-098			30847-626
	5	30849-099			30847-627
	6	30849-100			30847-628
	7	30849-101			–
	8	30849-102			30847-630
	10	30849-103			30847-631
	12	30849-104			–
Dimensions see page		7.60			7.60

1) SPQ (standard pack quantity): Part number includes 1 piece, but delivery is exclusively made in standard pack quantity (SPQ); please order at least the SPQ quantity or a multiple
Part no. includes one packing unit (PU); delivery is exclusively made in PU

Plug-in units – for IEC 60297, trapeziform

Individual components — Static trapeziform handle

Order Information

	Width HP	Plastic handle in trapeziform: Trapeziform handle black	Plastic handle in trapeziform: Trapeziform handle grey	Plastic handle in trapeziform: Fixing clip	Al profile handle: Handle	Al profile handle: Fixing part for Al profile handle	Al profile handle: Square nut
					item 20	item 21	item 22
		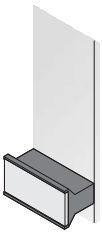 04608132	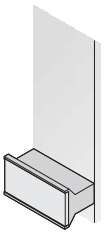 04608133	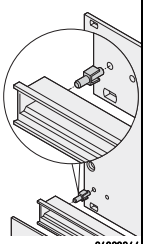 04808064	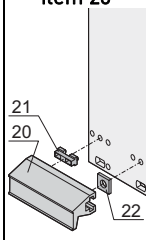 04608134	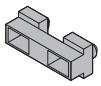 04608135	06707050
		handle: PPE, UL 94 V-1; identification plate: Al, 1.5 mm, anodized, cut edges plain; please order clip separately; 3, 4 HP each have 2 alignment pins, 5 ... 42 TE have no alignment pins; required qty: 1 handle for 3 HE 2 handles for 6 HE		clip, PPE, UL 94 V-0, black	Al extrusion, anodised; fixing part, POM, black; square nut, St, nickel-plated; at length of 1000 mm only Al extrusion	fixing part, POM, black	DIN 562, M2.5, St, nickel-plated
		1 piece (SPQ 5)[1]	1 piece (SPQ 5)[1]	PU 100 pieces	1 piece (SPQ 10)[1]	PU 100 pieces	PU 100 pieces
		3 / 6 U Height					
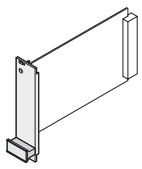 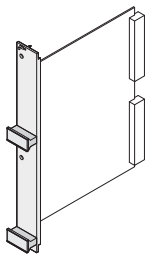 04608128 04608129	3	**20809-396**	**20809-294**	–	**20809-281**		
	4	**20809-397**	**20809-295**	–	**20809-282**		
	5	**20808-080**	**20808-003**	**21101-239**	**20809-283**		
	6	**20808-081**	**20808-060**	**21101-239**	**20809-284**		
	7	**20808-082**	**20808-061**	**21101-239**	**20809-285**		
	8	**20808-083**	**20808-062**	**21101-239**	**20809-286**		
	9	**20808-084**	**20808-063**	**21101-239**	**20809-287**		
	10	**20808-085**	**20808-004**	**21101-239**	**20809-288**	–	–
	12	**20808-086**	**20808-064**	**21101-239**	**20809-289**		
	14	**20808-087**	**20808-065**	**21101-239**	**20809-290**		
	21	**20808-088**	**20808-066**	**21101-239**	**20809-291**		
	28	**20808-089**	**20808-067**	**21101-239**	**20809-292**		
	40	**20808-090**	**20808-009**	**21101-239**	–		
	42	**20808-091**	**20808-068**	**21101-239**	**20809-293**		
	61	20808-092	**20808-012**	–	–		
	1000 mm	–	–	–	**30809-428**	**21100-476**	**21100-359**
Fixing material see page		7.59 Item 15, 16, 17					
Dimensions see page		7.59	7.59		7.59	7.59	7.59

1) SPQ (standard pack quantity): Part number includes 1 piece, but delivery is exclusively made in standard pack quantity (SPQ); lease order at least the SPQ quantity or a multiple

Part no. includes one packing unit (PU); delivery is exclusively made in PU

Plug-in units – for IEC 60297, trapeziform

Individual components — PCB bracket for static trapeziform handle

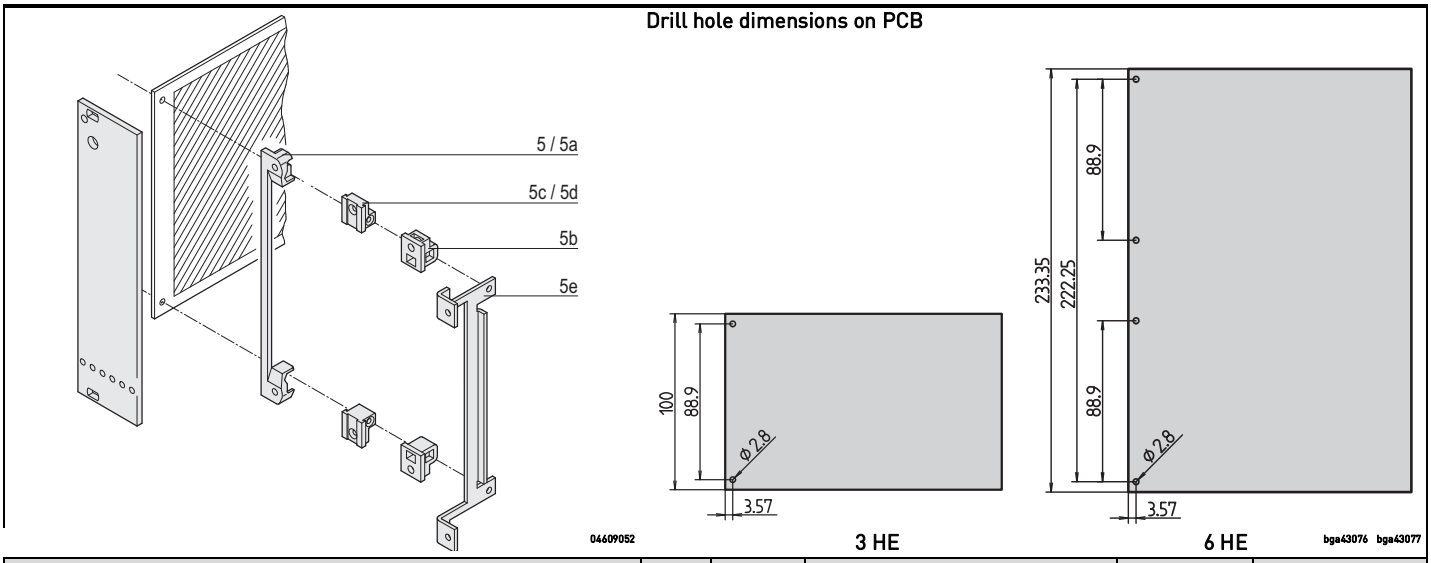

	Item		Required Qty 3 U	Required Qty 6 U	Qty/PU	Part no.
PCB bracket 4 clearance holes for front panel/PCB fixing, 4 recesses for hexagon nuts; PBT, UL 94 V-0, red	5	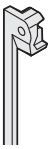	1	2	1 piece (SPQ 10)[1]	**60807-011**
PCB bracket 4 threads M2.5 for front panel/PCB fixing, PBT, UL 94 V-0, grey, 1 piece	5a	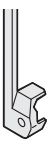	1	2	1 piece (SPQ 10)[1]	**60807-211**
PCB bracket Clearance hole for front panel fixing, with recess for hexagon nut, drill hole for self-tapping screw for PCB fixing, PBT, UL 94 V-0, grey, 1 piece	5b		2	4	1 piece (SPQ 10)[1]	**60807-183**
PCB bracket 2 threads M2.5 for front panel/PCB fixing, die-cast zinc, 1 piece	5c		2	4	1 piece (SPQ 10)[1]	**60807-181**
PCB bracket Thread M2.5 for front panel fixing, clearance hole for PCB fixing, die-cast zinc, 1 piece	5d		2	4	1 piece (SPQ 10)[1]	**60807-203**
PCB bracket 4 M2.5 threads for fixing front panel/PCB for recessed PCB mounting (20 mm), mounting depth 192.24 mm, St, zinc-plated; not for europacPRO, multipacPRO, ratiopacPRO, propacPRO or compacPRO, 1 piece	5e	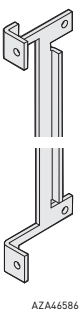	1	2	1 piece (SPQ 10)[1]	**30808-871**

1) SPQ (standard pack quantity): Part number includes 1 piece, but delivery is exclusively made in standard pack quantity (SPQ); please order at least the SPQ quantity or a multiple

Plug-in units – for IEC 60297, trapeziform

Individual components — Fixing material for static trapeziform handle

3 U

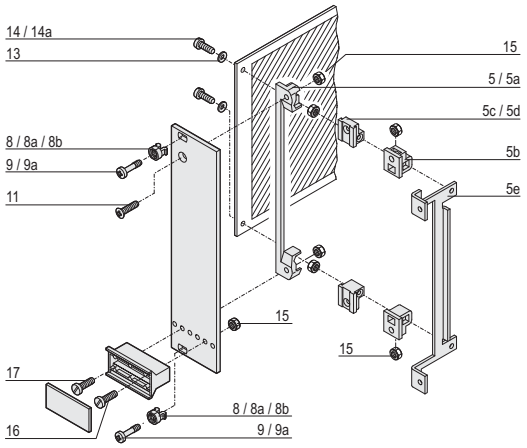

6 U

top

bottom

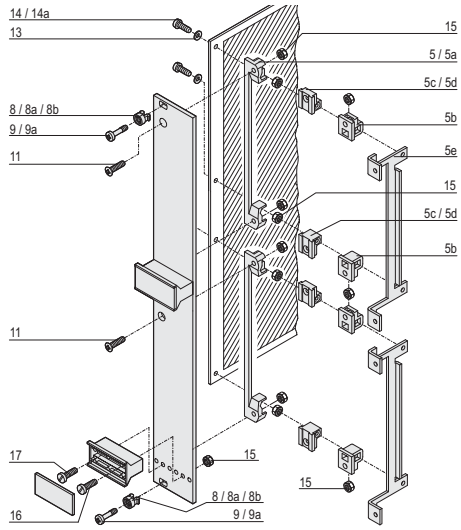

	Item		Required Qty 3 U < 8 HP	3 U ≥ 8 HP	6 U < 8 HP	6 U ≥ 8 HP	Qty/PU	Part no.
Plastic sleeve, for form hole 5.9 x 3.3 PA, UL 90 V-2, grey	8	aza45933	2	4	2	4	100	**21100-464**
Metal sleeve, for form hole 5.9 x 3.3, press-in Stainless steal	8	aza45934	2	4	2	4	100	**21100-662**
Metal sleeve, for form hole 5.9 x 3.3, to press-in Nickel-plated brass	8a	aza45934	2	4	2	4	100	**21100-660**
Pozidrive/slotted collar screw M2.5 × 11, St, nickel-plated not for europacPRO and cases AZA46586	9	AZA46586	2	4	2	4	100	**21100-748**
Pozidrive/slotted collar screw M2.5 × 12.3, St, nickel-plated AZA46586	9a	AZA46586	2	4	2	4	100	**21101-101**
Raised Pozidrive countersunk screw M2.5 × 8, St, nickel-plated	11	06702056	1	1	2	2	100	**21100-429**
Washer 2.7 DIN 125, St, nickel-plated, 100 pieces	13	AZA46586	2	2	4	4	100	**21100-721**
Pozidrive panhead screw M2.5 × 8, nickel-plated steel if using item 13	14	06702057	2	2	4	4	100	**21101-069**
Panhead screw, self-tapping 2.5 x 8, St, zinc-plated for items 5 and 5b	14a	06702057	1	1	–	–	100	**21100-710**
Hexagon nut M2.5, nickel-plated steel for items 5 and 5b — 5 5b	15	aza43239	4 2	4 2	8 4	8 4	100	**21100-144**
Pozidrive panhead screw M2.5 × 12, nickel-plated steel	16	06702057	1	1	2	2	100	**21101-221**
Pozidrive panhead screw M2.5 × 16, nickel-plated steel	17	06702057	1	1	2	2	100	**21101-222**

1) SPQ (standard pack quantity): Part number includes 1 piece, but delivery is exclusively made in standard pack quantity (SPQ); please order at least the SPQ quantity or a multiple

Plug-in units – for IEC 60297, trapeziform

Dimensions Front panels, U profile, shieldable for static trapeziform handle

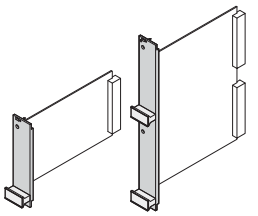

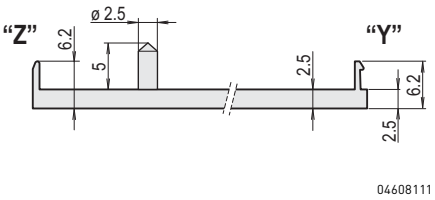

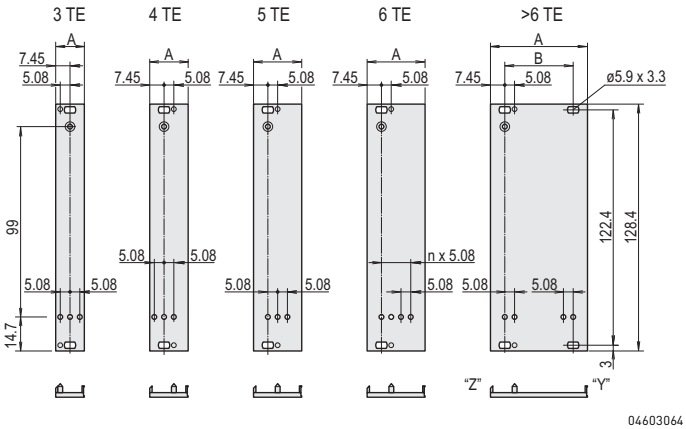

3 U

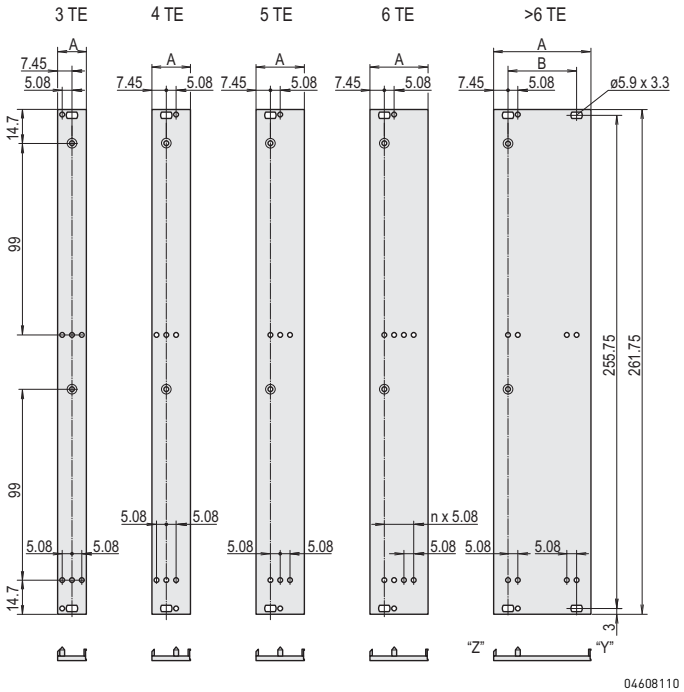

6 U

Dimensions table

Width HP	A mm	B mm
3	14.90	-
4	19.98	-
5	25.06	-
6	30.14	-
7	35.22	-
8	40.30	25.40
10	50.46	35.56
12	60.62	45.72

Dimensions Front panels for static trapeziform handle

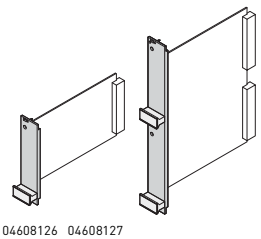

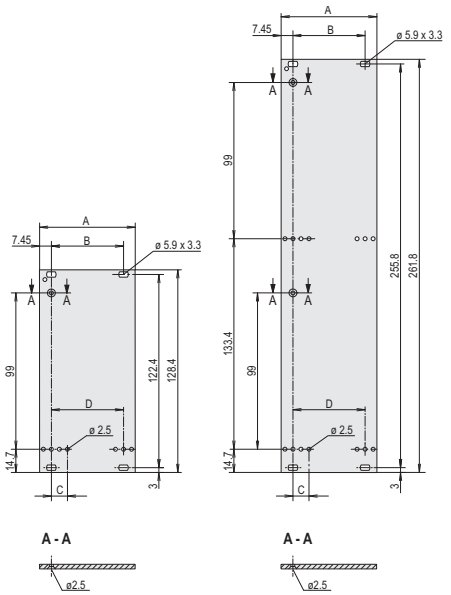

3 U 6 U

Dimensions table

Width HP	A mm	B mm	C mm	D mm
3	14.90	-	-	-
4	19.98	-	-	-
5	25.06	-	10.16	-
6	30.14	-	-	15.24
7	35.22	-	-	20.32
8	40.30	25.40	-	25.40
10	50.46	35.56	-	35.56
12	60.62	45.72	-	45.72

Plug-in units – for IEC 60297, trapeziform

Dimensions Static plastic handles, trapeziform

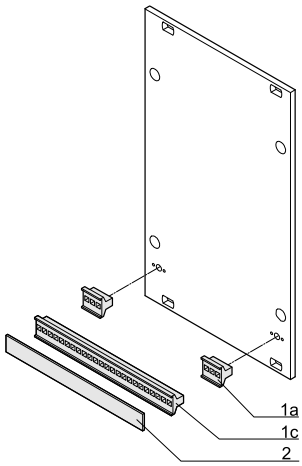

BGA46447

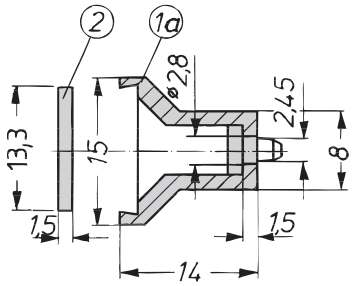

A4--328a

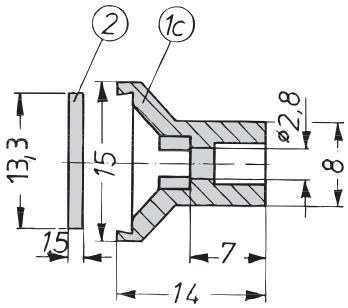

A4--328c

Dimensions table

Item	Width	Width
	HP	mm
1a	3	13.8
1a	4	18.9
1c	5	24.0
1c	6	29.0
1c	7	34.1
1c	8	39.2
1c	9	44.3
1c	10	49.4
1c	12	59.6
1c	14	69.7
1c	21	105.2
1c	28	140.8
1c	40	201.8
1c	42	212.0
1c	61	308.5

Dimensions Aluminium extrusion handles

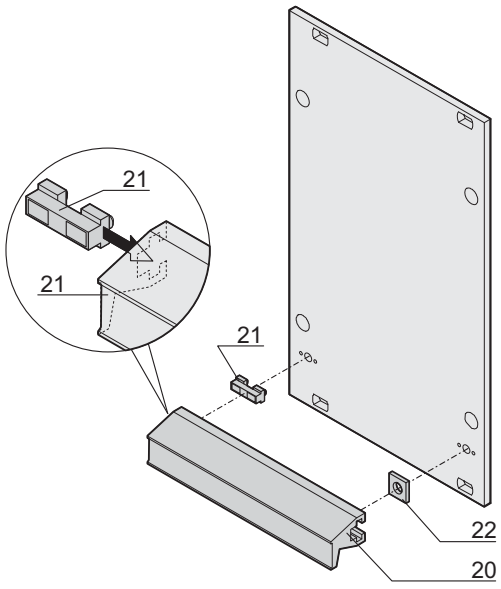

04602069

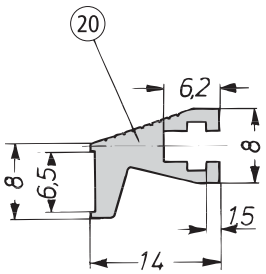

A4-328d

Dimensions table

Item	Width	Width
20	HP	mm
20	3	13.8
20	4	18.9
20	5	24.0
20	6	29.0
20	7	34.1
20	8	39.2
20	9	44.3
20	10	49.4
20	12	59.6
20	14	69.7
20	21	105.2
20	28	140.8
20	40	201.8
20	42	212.0
20	-	1000

Plug-in units – with mechanical shielding

Plug-in unit with mechanical shielding, 3 U kits

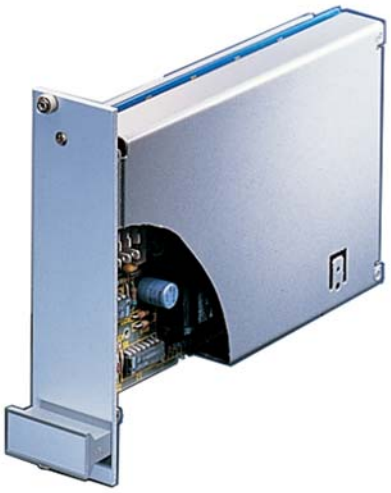

04694001

- Mechanical protection of sub-assembly
- Earthing of shielding panels possible by Faston connectors 6.3 × 0.6 mm
- For euroboards 100 × 160 mm

Handles without extraction function

04692003

Handles with extraction function

04692005

3 U kit, shielding component side, handles with/without extraction function

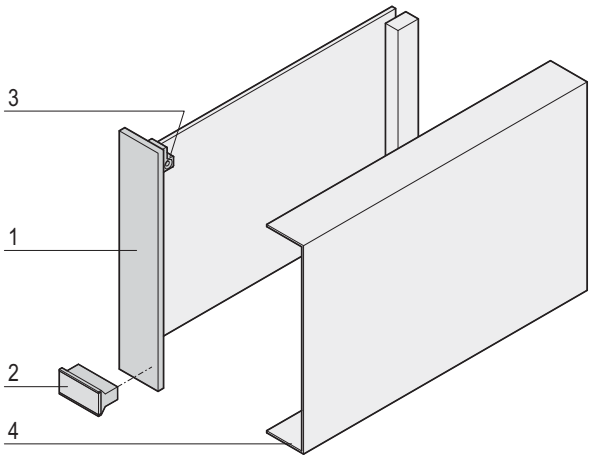

04602077

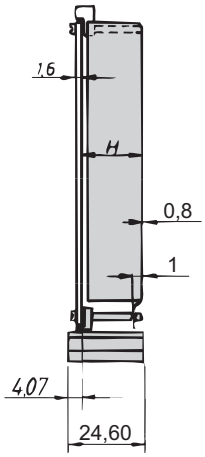

a4-237

- Usable connectors in accordance with EN 60603 (DIN 41612): Construction type B, C, D, F, H, R;

Delivery comprises (kit)

Item	Qty	Description
1	1	Front panel, Al, 2.5 mm, front: anodised, rear: irisdescent green chromated
2	1	Trapeziform handle, PPE, UL 94 V-1, grey
3	1	Board support, PBT, UL 94 V-0, red
5	1	Assembly kit (also for shielding panels)

Order Information

Width	H	Plug-in unit without extractionfunction	Plug-in unit with extractionfunction
HP	mm	Part no.	Part no.
6	24.60	**20809-502**	20809-516
Item 4 Shielding panel component side for 7 HP front panel width, stainless steel, 0.8 mm, 1 piece		**20809-371**	**20809-371**

Note

- Keying/coding with separate keying/coding strip is not possible
- Please order shielding plates separately

Plug-in units – with mechanical shielding

3 U kits, both sides shielded (solder/component side), handles with/without extraction function

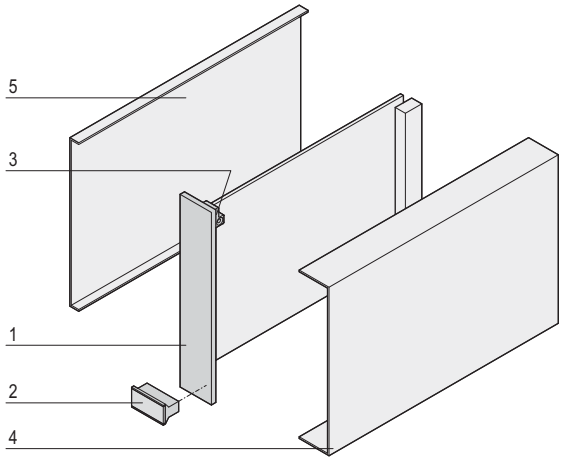

04602078

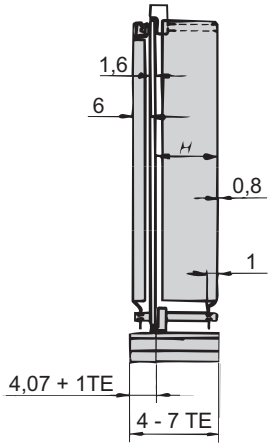

a4-236a

- Usable connectors in accordance with EN 60603 (DIN 41612): Construction type B, C, D, F, H, R;

Delivery comprises

Item	Qty	Description
1	1	Front panel, Al, 2.5 mm, front: anodised, rear: irisdescent green chromated
2	1	Trapeziform handle, without extraction function, PPE, UL 94 V-1, grey
3	2	Board support, PBT, UL 94 V-0, red
6	1	Assembly kit (also for shielding panels)

Order Information

Width	H	Plug-in unit without extraction function	Plug-in unit with extraction function
HP	mm	Part no.	Part no.
4	9.60	**20809-495**	–
5	14.70	20809-496	20809-511
6	19.80	20809-497	20809-512
7	24.90	**20809-498**	20809-513
Item 4 Shielding panel component side for 4 HP front panel width, stainless steel, 0.8 mm, 1 piece		**20809-329**	**20809-329**
Item 4 Shielding panel component side or 5 HP front panel width, stainless steel, 0.8 mm, 1 piece		**20809-357**	**20809-357**
Item 4 Shielding panel component side for 6 HP front panel width, stainless steel, 0.8 mm, 1 piece		**20809-359**	**20809-359**
Item 4 Shielding panel component side for 7 HP front panel width, stainless steel, 0.8 mm, 1 piece		**20809-371**	**20809-371**
Item 5 Shielding panel on solder side, stainless steel, 0.8 mm, 1 piece		**30809-571**	**30809-571**

Note

- Keying/coding with separate keying/coding strip is not possible
- Where the shielding plate is used for the solder side, the PCB is offset to the right by 1 HP

Plug-in units – with mechanical shielding

PCB cover for euroboards

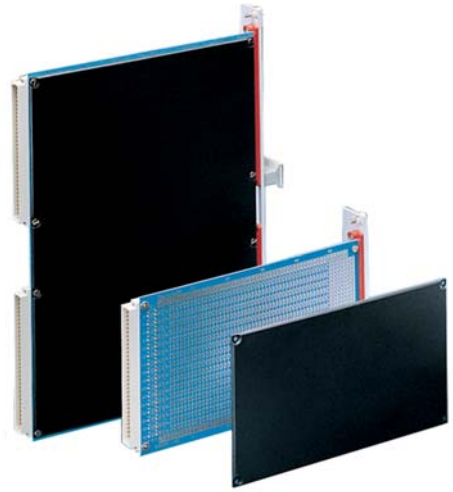

11092008

- Mechanical protection of the solder side

Order Information

Description	Qty	Part no.
PCB cover (thickness 0.9 mm) for euroboards (100 x 160 mm), PBT, black, max. operating temperature without permanent deformation 55 °C	1 piece (SPQ 10)	61000-007
PCB cover (thickness 0.9 mm) with similar temperature expansion coefficients to FR4 PCB; for euroboards (100 x 160 mm), LCP, UL 94 V-0, white, max. operating temperature without permanent deformation 85 °C	1 piece (SPQ 10)	61000-177
PCB cover for double euroboards (233.35 x 160 mm), PP, UL 94 V-0, black	1 piece (SPQ 10)	61000-012
Slotted flathead screw M2.5 × 6, height of head 1.2 mm, PU 100 pieces		21102-007
Slotted flathead screw M2.5 × 12, height of head 1.2 mm, PU 100 pieces		21102-008

SPQ (standard pack quantity): Part number includes 1 piece, but delivery is exclusively made in standard pack quantity: please order at least 10 pieses of PCB covers or a multiple

For PCBs 100 × 160 mm

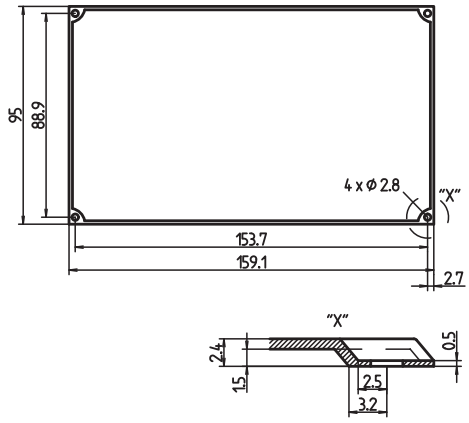

LKA40520

For PCBs 233.35 × 160 mm

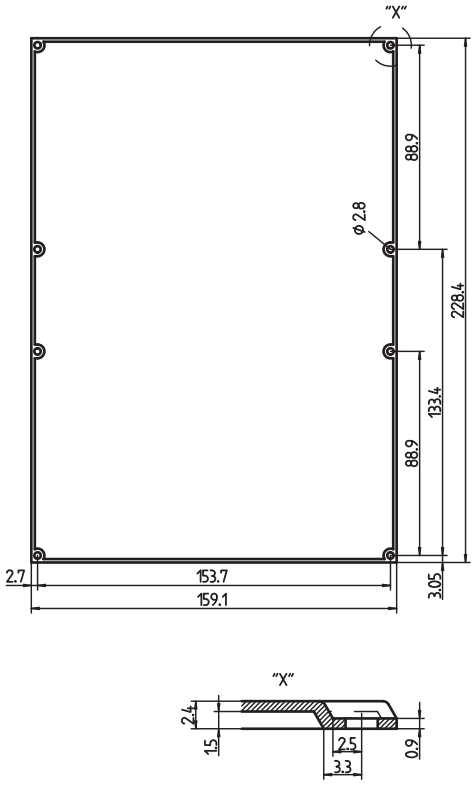

LKA30451

Plug-in units – with mechanical shielding

PCB cover for CompactPCI

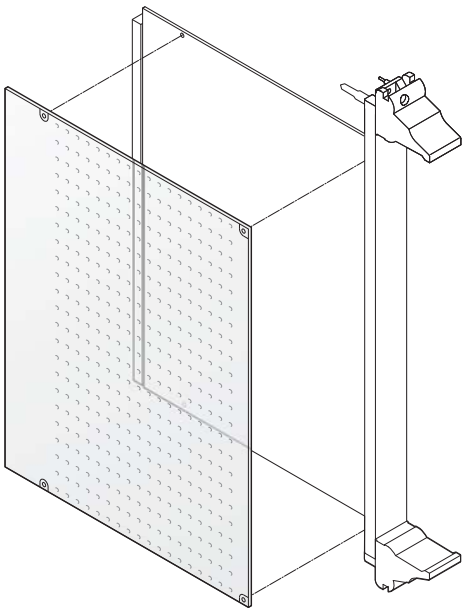

12303051

- Mechanical protection of solder side
- Cover is perforated for better cooling of components

Delivery comprises

Item	Qty	Description
1	1	Cover, plastic, 0.5 mm, antistatic, perforated, UL 94 V-0; max. operating temperature 65 °C, max. continuous operating temperature 55 °C

Order Information

Height U	Depth mm	Part no.
6	80	24579-039
3	160	**24579-037**
6	160	**24579-038**
Fixing clips PU 100 pieces		21101-914

Note

- Fixing clips are required for mounting the perforated covers; please order separately

Content

Cabinets 1
Wall mounted cases 2
Accessories for cabinets and wall mounted cases . 3
Climate control . 4
Electronics cases 5
Subracks/ 19" chassis 6
Front panels, plug-in units . . . 7
Systems 8
Power supply units 9
Backplanes . . . 10
Connectors, front panel component system 11
Appendix 12

Frame type plug-in units

04807002

19" modules are mechanical components that serve to carry one or more circuit boards. The boards housed in a module are thus combined into a larger electronic function unit that is self-contained and testable. Mechanical dimensions conform to IEC 60297-3-101 / IEEE 1101.1/11 standards, i.e. the so-called 19" standard. These function units are integrated into the subrack or case; their dimensions likewise form a component of IEC 60297-3-101 / IEEE 1101.1/11.

The dimension obligations of the standard give only little freedom for individual design of frame type plug-in units. The aim is therefore to make optimum use of what freedoms regarding dimensions it does allow, e.g.

- to maximise the internal space of a plug-in unit and thus create maximum space for electronic components, or
- to ensure optimal EMC shielding with minimum loss of mounting space to the shielding components

Standards

- IEC 60297-3-101 / IEEE 1101.1/11

Product selection kits

Width	5 HP		6 HP		7 HP		8 HP		10 HP		12 HP		14 HP		21 HP		28 HP		42 HP	
Height in U	3	6	3	6	3	6	3	6	3	6	3	6	3	6	3	6	3	6	3	6
Frame-type plug-in units PRO	–	–	–	–	–	–	x	x	x	x	x	x	x	x	x	x	x	x	x	x
Frame type plug-in units PRO with cooling fins	–	–	–	–	–	–	–	–	–	–	x	x	x	x	x	x	–	–	–	–
Frame-type plug-in units PRO with hood	x	x	x	x	x	x	–	–	x	x	x	x	x	x	–	–	–	–	–	–
HF frame-type plug-in units	–	–	–	–	x	–	–	–	x	–	x	–	x	–	x	–	x	–	–	–

Overview 7.64

Frame-type plug-in units to house printed boards

- For PCBs in euroboard format
- Kits or configuration from single components
- Front panels: unshielded or EMC shielded

Introduction: Product features, product comparison 7.66

04808008

Frame-type plug-in units PRO

- Kit or configuration from single components in 3 U and 6 U, 8 ... 42 HP
- Shielded and unshielded versions
- Side panel with/without cooling fins
- For one or several PCBs or one or several connectors
- Various possibilities for combining the individual components

Frame type plug-in units PRO

Frame type plug-in units PRO, shielded/ unshielded 7.68

ServicePLUS 7.74

ServicePLUS configuration 7.75

04808009

Plug-in units PRO with hood

- Kit in 3 U and 6 U, 5 ... 14 HP
- Shielded and unshielded versions
- For one PCB with one connector

Frame-type plug-in units PRO with hood, unshielded 7.86

04892005

HF frame-type plug-in units

- Kit or configuration from single components in 3 U, 7 ... 28 HP
- For shielding against high-frequency radiation
- Tube with cooling fins, in extruded aluminium
- For one or more PCBs, one or more connectors

HF plug-in units

Kits 3 U 7.90

ServicePLUS configuration 7.91

Accessories for plug-in units

see page 7.52

30407004

ServicePLUS from page 7.74

e.g. individual configuration and assembly
e.g. modification (special colours)
e.g. customised solutions with modified frame-type plug-in units (special sizes)

www.schroff.biz/ServicePLUS

FRONT PANEL EXPRESS

Frame type plug-in units PRO – Introduction

The new generation

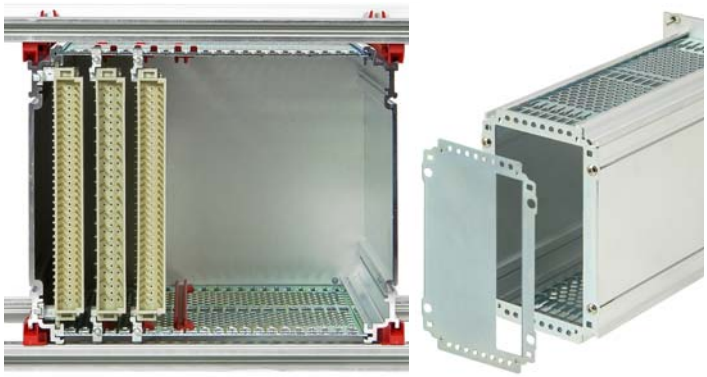

04808013 04808014

Rear view: frame type plug-in unit mounted in subrack

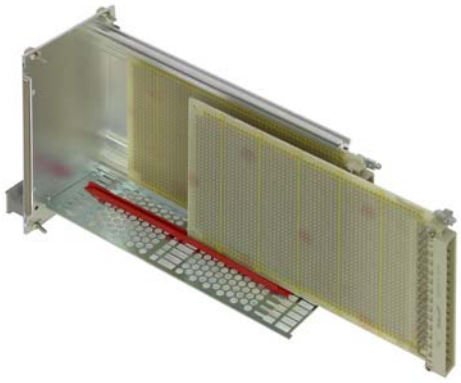

04808012

Board for slot 1 fixes to the side panel; further boards are fixed with guide rails

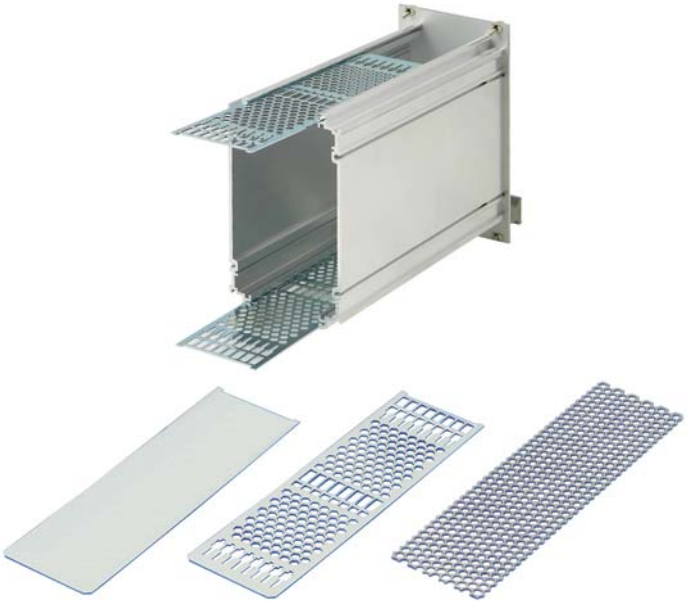

04808011 04808016

Sliding cover plates

The frame type plug-in units conform to IEC 60297-3-101.
They serve to house standardized PCBs and bulky components.
Because of the standardized assembly dimensions the frame type plug-in units can be mounted on guide rails, to be pushed into the subrack, in any order and using any plug-in unit.
The robust Al extrusion construction is especially suited for heavy components and the rough handling as "Field Replaceable Unit".

Details

The EMC version of the front panel was improved for frequencies over 1 GHz by using a conductive textile gasket and a robust U-shaped front panel

Push-in cover plates for quick fitting

Handles to be bolted-on from the front, easy mounting

Optimised air flow rate thanks to slender extruded side panels and large perforation areas in the cover plates, a perforation degree of up to 65 % is possible

3 cover plate versions (solid, perforated, perforated for guide rail mounting)

Width of frame-type plug-in units from 8 HP

To achieve a higher airflow rate, exceptionally slender guide rails are used to fix the boards

From slot 2 guide rails can be positioned in HP grid

Easy fixing of the boards in the frame-type plug-in units; only 2 x 1 screws per board are needed to fix the boards

3 rear panel variants (solid, for one DIN connector, for multiple DIN connectors)

The flat rear panel enables simple reworking (e.g. punching); the rear panel can be removed without removing the PCBs

For better EMC contacting between rear panel and cover plate and to increase the stability of broad frame-type plug-in units, a rear panel retainer is available

Use of Torx screws for secure machine mounting

Note:
Frame type plug-in units cannot be combined with guide rails for CompactPCI or VME64x applications (width 4 HP)

Frame type plug-in units PRO – Introduction

Comparison:
Frame-type plug-in units PRO/Frame-type plug-in units PRO with hood

Frame-type plug-in units PRO

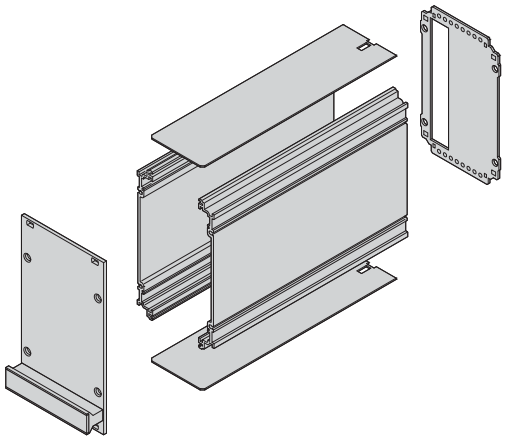

04808125

Frame-type plug-in units PRO with hood (shielded)

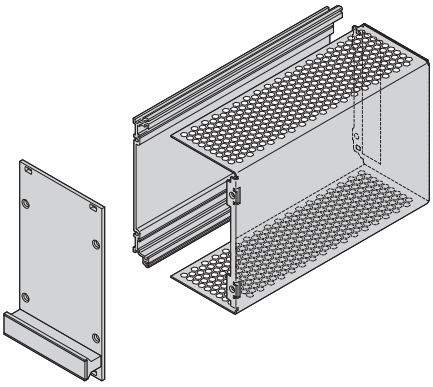

04808115

For one or multiple PCBs	Only for one PCB
Modular, at least 6 components (front panel, 2 side panels, 2 cover plates, rear panel)	Only 3 components (front panel, left hand side panel, hood with integrated rear panel)
Identical front panel and front handle	Identical front panel and front handle
Identical left hand side panel (Al extrusion)	Identical left hand side panel (Al extrusion)
Side panel on right hand side (Al extrusion)	Hood on right hand side (Al sheet)
Separate rear panel	Hood includes rear panel
Widths from 8 HP to 42 HP	Widths from 5 HP to 14 HP
Guiding in subrack/case with 4 guide rails; left and right side panels	Guiding in subrack/case with 2 guide rails; left side panel
3 rear panel variants (for one DIN connector, for multiple DIN connectors, rear panel without cut-out)	1 rear panel variant (for one DIN connector)

Frame type plug-in units PRO

Frame type plug-in units PRO, 3 U kits, front panel shielded (textile gasket)

Illustration shows 12 HP width, side panel depth 167 mm

ServicePLUS see page 7.74

- Extruded side panels with groove to rigth and left, to insert a PCB (board position in accordance with standard in left side panel only)
- 2 board depths: 160 mm and 220 mm
- 2 cover plate versions
  - with perforation, for guide rails (5a, airflow rate approx. 60 %); please order guide rails separately
  - Without perforation (5b)
- 2 rear panel versions
  - With cut-out for one connector (3a, in accordance with EN 60603-2, DIN 41612)
  - With cut-out for multiple connectors (3b, in accordance with EN 60603-2, DIN 41612)

Delivery comprises (Kit)

Item	Qty	Description
1	1	Front panel, U profile anodised, rear conductive, alignment pin pressed-in
2	1	Handle, grey, PPE, UL 94 V-1
3a	1	Rear panel, St, zinc-plated, 1.5 mm, with cut-out for one connector, incl. PCB fixing (slot 1)
3b	1	Rear panel, St, zinc-plated, 1.5 mm, with cut-out for multiple connectors, incl. PCB fixing (slot 1 and slot 2), incl. 2 guide rails
3c	2	rear panel fastener
4	2	Side panel, Al extrusion, colourless passivated, with groove for one PCB
5a	2	Cover plate, St, zinc-plated, 1.0 mm, with perforation
5b	2	Cover plate, St, zinc-plated, 1.0 mm, without perforation
6	1	EMC sealing (textile)
7	1	Assembly kit

Order Information

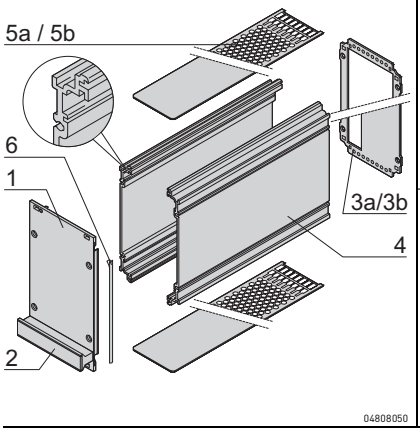

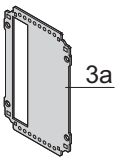

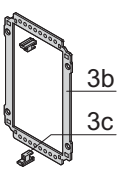

Rear panel	Height U	Width HP	Cover plate without perforation, 167 mm deep, Part no. (5b, 04808055)	Cover plate without perforation, 227 mm deep, Part no. (5b, 04808055)	Cover plate with perforation, for guide rails, 167 mm deep, Part no. (5a, 04808054)	Cover plate with perforation, for guide rails, 227 mm deep, Part no. (5a, 04808054)
3a	3	8	24813-408	24813-458	24813-208	24813-258
	3	10	24813-410	24813-460	24813-210	24813-260
	3	12	24813-412	24813-462	24813-212	24813-262
	3	14	24813-414	24813-464	24813-214	24813-264
	3	21	24813-421	24813-471	24813-221	24813-271
	3	28	24813-428	24813-478	24813-228	24813-278
	3	42	24813-442	24813-492	24813-242	24813-292
3b, 3c	3	8	–	–	24813-308	24813-358
	3	10	–	–	24813-310	24813-360
	3	12	–	–	24813-312	24813-362
	3	14	–	–	24813-314	24813-364
	3	21	–	–	24813-321	24813-371
	3	28	–	–	24813-328	24813-378
	3	42	–	–	24813-342	24813-392

- Description of individual components, guide rails, dimension drawings, other combinations cover plates/rear panels etc. see from page 7.75

Frame type plug-in units PRO

Frame type plug-in units PRO, 6 U kits, front panel shielded (textile gasket)

Illustration shows 12 HP width, side panel depth 167 mm

ServicePLUS see page 7.74

- Extruded side panels with groove to rigth and left, to insert a PCB (board position in accordance with standard in left side panel only)
- 2 board depths: 160 mm and 220 mm
- 2 cover plate versions
  - With perforation, for guide rails (5a, airflow rate approx. 60 %),
  - please order guide rails separately
  - Without perforation (5b)
- 2 rear panel versions
  - With cut-out for one connector (3a; in accordance with EN 60603-2, DIN 41612)
  - With cut-out for multiple connectors (3b; in accordance with EN 60603-2, DIN 41612)
  - 6 U has cut-outs for connectors at top and bottom

Delivery comprises (Kit)

Item	Qty	Description
1	1	Front panel, U profile anodised, rear conductive, alignment pin pressed-in
2	1	Handle, grey, PPE, UL 94 V-1
3a	1	Rear panel, St, zinc-plated, 1.5 mm, with cut-out for one connector, incl. PCB fixing (slot 1)
3b	1	Rear panel, St, zinc-plated, 1.5 mm, with cut-out for multiple connectors, incl. PCB fixing (slot 1 and slot 2), incl. 2 guide rails
3c	2	rear panel fastener
4	2	Side panel, Al extrusion, colourless passivated, with groove for one PCB
5a	2	Cover plate, St, zinc-plated, 1.0 mm, with perforation
5b	2	Cover plate, St, zinc-plated, 1.0 mm, without perforation
6	1	EMC sealing (textile)
7	1	Assembly kit

Order Information

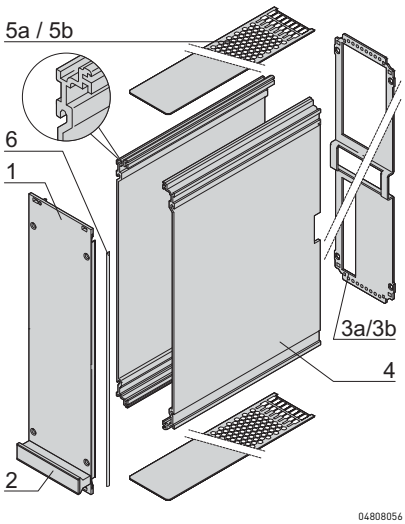

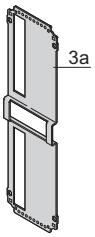

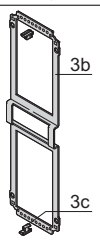

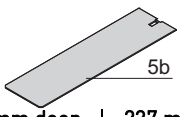

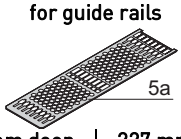

Rear panel	Height U	Width HP	Cover plate without perforation, 167 mm deep Part no.	Cover plate without perforation, 227 mm deep Part no.	Cover plate with perforation, for guide rails, 167 mm deep Part no.	Cover plate with perforation, for guide rails, 227 mm deep Part no.
3a	6	8	**24813-908**	**24813-958**	**24813-708**	**24813-758**
	6	10	**24813-910**	**24813-960**	**24813-710**	**24813-760**
	6	12	**24813-912**	**24813-962**	**24813-712**	**24813-762**
	6	14	**24813-914**	**24813-964**	**24813-714**	**24813-764**
	6	21	**24813-921**	**24813-971**	**24813-721**	**24813-771**
	6	28	**24813-928**	**24813-978**	**24813-728**	**24813-778**
	6	42	**24813-942**	**24813-992**	**24813-742**	**24813-792**
3b	6	8	–	–	**24813-808**	**24813-858**
	6	10	–	–	**24813-810**	**24813-860**
	6	12	–	–	**24813-812**	**24813-862**
	6	14	–	–	**24813-814**	**24813-864**
	6	21	–	–	**24813-821**	**24813-871**
	6	28	–	–	**24813-828**	**24813-878**
3c	6	42	–	–	**24813-842**	**24813-892**

- Description of individual components, guide rails, dimension drawings, other combinations cover plates/rear panels etc. see from page 7.75

Frame type plug-in units PRO

Frame-type plug-in units PRO, 3 U kits, front panel unshielded

Illustration shows 12 HP width, side panel depth 167 mm

ServicePLUS see page 7.74

- Extruded side panels with groove to rigth and left, to insert a PCB (board position in accordance with standard in left side panel only)
- 2 board depths: 160 mm and 220 mm
- 2 cover plate versions
  - with perforation, for guide rails (5a, airflow approx. 60 %); please order guide rails separately
  - Without perforation (5b)
- 2 rear panel versions
  - With cut-out for one connector (3a, in accordance with EN 60603-2, DIN 41612)
  - With cut-out for multiple connectors (3b, in accordance with EN 60603-2, DIN 41612)

Delivery comprises (Kit)

Item	Qty	Description
1	1	Front panel, Al, 2.5 mm, anodised, cut edges plain
2	1	Handle, grey, PPE, UL 94 V-1
3a	1	Rear panel, St, zinc-plated, 1.5 mm, with cut-out for one connector, incl. PCB fixing (slot 1)
3b	1	Rear panel, St, zinc-plated, 1.5 mm, with cut-out for multiple connectors, incl. PCB fixing (slot 1 and slot 2), incl. 2 guide rails
3c	2	rear panel fastener
4	2	Side panel, Al extrusion, colourless passivated, with groove for one PCB
5a	2	Cover plate, St, zinc-plated, 1.0 mm, with perforation
5b	2	Cover plate, St, zinc-plated, 1.0 mm, without perforation
6	1	Assembly kit

Order Information

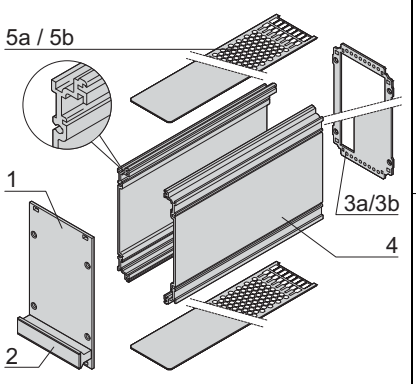

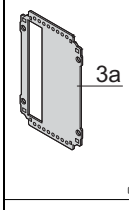

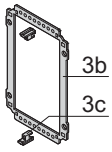

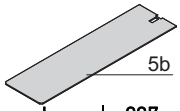

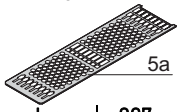

Rear panel	Height U	Height HP	Cover plate without perforation, 167 mm deep, Part no.	Cover plate without perforation, 227 mm deep, Part no.	Cover plate with perforation, for guide rails, 167 mm deep, Part no.	Cover plate with perforation, for guide rails, 227 mm deep, Part no.
3a	3	8	**24812-408**	**24812-458**	**24812-208**	**24812-258**
	3	10	**24812-410**	**24812-460**	**24812-210**	**24812-260**
	3	12	**24812-412**	**24812-462**	**24812-212**	**24812-262**
	3	14	**24812-414**	**24812-464**	**24812-214**	**24812-264**
	3	21	**24812-421**	**24812-471**	**24812-221**	**24812-271**
	3	28	**24812-428**	**24812-478**	**24812-228**	**24812-278**
	3	42	**24812-442**	**24812-492**	**24812-242**	**24812-292**
3b, 3c	3	8	–	–	**24812-308**	**24812-358**
	3	10	–	–	**24812-310**	**24812-360**
	3	12	–	–	**24812-312**	**24812-362**
	3	14	–	–	**24812-314**	**24812-364**
	3	21	–	–	**24812-321**	**24812-371**
	3	28	–	–	**24812-328**	**24812-378**
	3	42	–	–	**24812-342**	**24812-392**

- Description of individual components, guide rails, dimension drawings, other combinations cover plates/rear panels etc. see from page 7.75

Frame type plug-in units PRO

Frame type plug-in units PRO, 6 U kits, front panel unshielded

Illustration shows 12 HP width, side panel depth 167 mm

ServicePLUS see page 7.74

- Extruded side panels with groove to rigth and left, to insert a PCB (board position in accordance with standard in left side panel only)
- 2 board depths: 160 mm and 220 mm
- 2 cover plate versions
  - with perforation, for guide rails (5a, airflow approx. 60 %); please order guide rails separately
  - Without perforation (5b)
- 2 rear panel versions
  - With cut-out for one connector (3a; in accordance with EN 60603-2, DIN 41612)
  - With cut-out for multiple connectors (3b; in accordance with EN 60603-2, DIN 41612)
  - 6 U has cut-outs for connectors at top and bottom

Delivery comprises (Kit)

Item	Qty	Description
1	1	Front panel, Al, 2.5 mm, anodised, cut edges plain
2	1	Handle, grey, PPE, UL 94 V-1
3a	1	Rear panel, St, zinc-plated, 1.5 mm, with cut-out for one connector, incl. PCB fixing (slot 1)
3b	1	Rear panel, St, zinc-plated, 1.5 mm, with cut-out for multiple connectors, incl. PCB fixing (slot 1 and slot 2), incl. 2 guide rails
3c	2	rear panel fastener
4	2	Side panel, Al extrusion, colourless passivated, with groove for one PCB
5a	2	Cover plate, St, zinc-plated, 1.0 mm, with perforation
5b	2	Cover plate, St, zinc-plated, 1.0 mm, without perforation
6	1	Assembly kit

Order Information

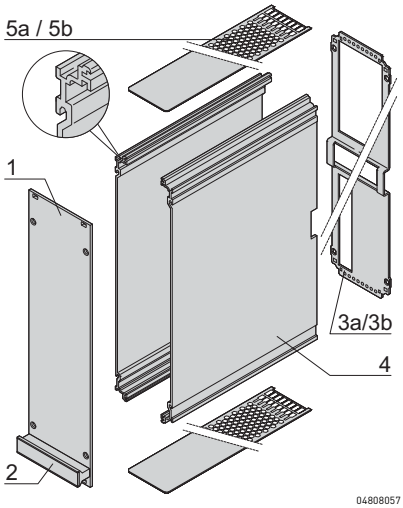

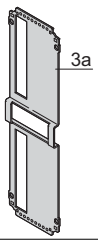

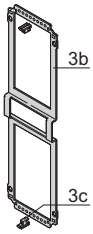

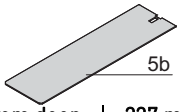

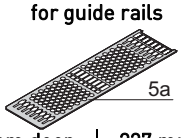

Rear panel	Height	Width	Cover plate without perforation		Cover plate with perforation, for guide rails	
			167 mm deep	227 mm deep	167 mm deep	227 mm deep
	U	HP	Part no.	Part no.	Part no.	Part no.
3a	6	8	**24812-908**	**24812-958**	**24812-708**	**24812-758**
	6	10	**24812-910**	**24812-960**	**24812-710**	**24812-760**
	6	12	**24812-912**	**24812-962**	**24812-712**	**24812-762**
	6	14	**24812-914**	**24812-964**	**24812-714**	**24812-764**
	6	21	**24812-921**	**24812-971**	**24812-721**	**24812-771**
	6	28	**24812-928**	**24812-978**	**24812-728**	**24812-778**
	6	42	**24812-942**	**24812-992**	**24812-742**	**24812-792**
3b	6	8	–	–	**24812-808**	**24812-858**
	6	10	–	–	**24812-810**	**24812-860**
	6	12	–	–	**24812-812**	**24812-862**
	6	14	–	–	**24812-814**	**24812-864**
	6	21	–	–	**24812-821**	**24812-871**
	6	28	–	–	**24812-828**	**24812-878**
3c	6	42	–	–	**24812-842**	**24812-892**

- Description of individual components, guide rails, dimension drawings, other combinations cover plates/rear panels etc. see from page 7.75

Frame type plug-in units PRO

Frame type plug-in unit PRO kits, side panel with cooling fins, front panel shielded

04812018

Illustration shows 12 HP width, side panel depth 167 mm

- Right side panel with cooling fins to improve heat dissipation; left side panel extrusion with groove to insert a PCB (board position in accordance with standard in left side panel only)
- 2 board depths: 160 mm and 220 mm
- Cover plate without perforation
- With cut-out for one connector in accordance with EN 60603-2, DIN 41612
- With 10 W installed heat dissipation loss the internal temperature falls by approx. 5°C

Delivery comprises (Kit)

Item	Qty	Description
1	1	Front panel, U profile anodised, rear conductive, alignment pin pressed-in
2	1	Handle, grey, PPE, UL 94 V-1
3	1	Rear panel, St, zinc-plated, 1.5 mm, with cut-out for one connector, incl. PCB fixing (slot)
4a	2	Side panel, left, Al extrusion, clear passivated, with groove for one PCB
4b	2	Side panel, right, Al extrusion, clear passivated, with cooling fins
5	2	Cover plate, St, zinc-plated, 1.0 mm
6	1	EMC sealing (textile)
7	1	Assembly kit

ServicePLUS see page 7.74

Order Information

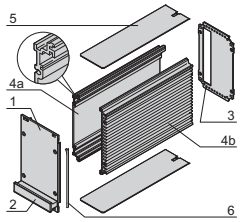

04812058

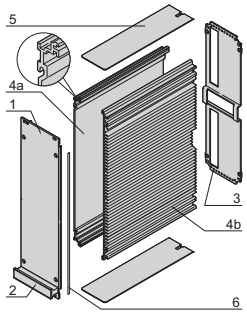

04812060

Height U	Width HP	Depth = 167 mm Part no.	Depth = 227 mm Part no.
3	14	24813-164	–
3	21	24813-171	–
6	14	24813-664	24813-614
6	21	24813-671	24813-621

Note

- Description of individual components, guide rails, dimension drawings, other combinations cover plates/rear panels etc. see from page 7.75

Frame type plug-in units PRO

Frame type plug-in units PRO kits, side panel with cooling fins, front panel unshielded

04812008

Illustration shows 12 HP width, side panel depth 167 mm

- Right side panel with cooling fins to improve heat dissipation; left side panel extrusion with groove for insertion of a PCB (board position in accordance with standard in left side panel only)
- 2 board depths: 160 mm and 220 mm
- Cover plate without perforation
- With cut-out for one connector in accordance with EN 60603-2, DIN 41612
- With 10 W installed heat dissipation loss the internal temperature falls by approx. 5°C

Delivery comprises (Kit)

Item	Qty	Description
1	1	Front panel, Al, 2.5 mm, anodised, cut edges plain
2	1	Handle, grey, PPE, UL 94 V--1
3	1	Rear panel, St, zinc-plated, 1.5 mm, with cut-out for one connector, incl. PCB fixing (slot 1)
4a	2	Side panel, left, Al extrusion, clear passivated, with groove for one PCB
4b	2	Side panel, right, Al extrusion, clear passivated, with cooling fins
5	2	Cover plate, St, zinc-plated, 1.0 mm
6	1	Assembly kit

ServicePLUS see page 7.74

Order Information

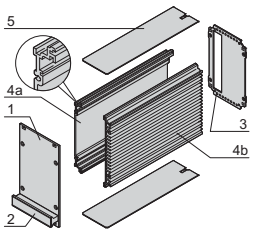

04812059

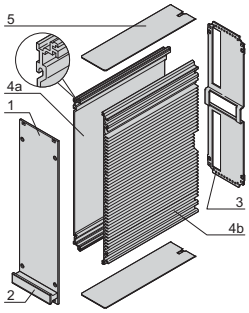

04812061

Height U	Width HP	Depth = 167 mm Part no.	Depth = 227 mm Part no.
3	12	24812-162	–
3	14	24812-164	–
3	21	24812-171	–
6	12	24812-662	24812-612
6	14	24812-664	24812-614
6	21	24812-671	24812-621

Note

- Description of individual components, guide rails, dimension drawings, other combinations cover plates/rear panels etc. see from page 7.75

Frame type plug-in units PRO ServicePLUS

configuration

Components can be varied and combined freely

Simple. Fast. For the product you want.

- Configuration tables for frame type plug-in units PRO from page 7.75
- Configuration tables for HF plug-in units from page 7.90
- Online configuration: www.schroff.co.uk/configuration

assembly

Fitting of all mechanical, electrical and electronic components by our specialists

Assembled by professionals. Double benefit!

- Professional and reliable
- Packaged ready for despatch

modification

Custom drillings, cut-outs and special colours for off-the-shelf products

Small changes. Large impact.

- Holes, cut-outs, drill holes, individual colour and printing

solution

Integration and custom developments

Simple. Fast. From one source.

- Special sizes, custom solutions
- Heat dissipation concepts
- EMC solutions

express

Delivery time to customer's request

When fast has to be faster.

- Delivery time for front panels from 2 working days; for frame-type plug-in units from 5 working days

FRONT PANEL EXPRESS

academy

Knowledge transfer and partnership

Knowledge. Sharing. Partnerships.

- Downloadable CAD drawings, test reports, user manual

Frame type plug-in units PRO ServicePLUS

Individual components Front panels, front handles

		Front panel	Shieldable front panel, U profile			Trapeziform handle, grey (without extraction function)	
		unshielded	Front panel	Textile EMC gasket		Grey	Black
		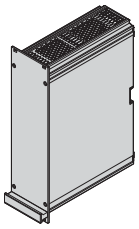 04808124	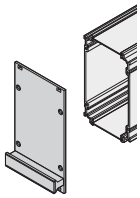 04808060	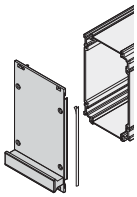 04808061	04808062	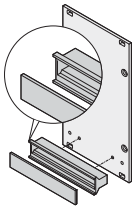 04808063	
Supplied quantity for assembly of 5 frame type plug-in units		Al, 2.5 mm, front anodised, rear anodised, cut edges blank	Al extrusion, alignment pin pressed-in, front anodised, rear conductive	always fixed laterally on the front panel, in the groove of the profile, textile gasket, core: foam, sleeve: textile cladding with CuNi coating, UL 94 V-0, temperature range -40 ... 70 °C		handle: PPE, UL 94 V-1; identification plate: Al, 1.5 mm, anodised, cut edges plain; please order clip separately (included in mounting kit for five plug-in units or individual parts) 7.78	
		1 piece (SPQ 5)[1]	1 piece (SPQ 5)[1]	PU 10 pieces	PU 100 pieces	1 piece (SPQ 5)[1]	1 piece (SPQ 5)[1]
	Width	**3 U Height**					
	HP	PCB depth 160 mm					
	8	**34812-108**	**34813-108**	**21101-853**	**21101-854**	**20808-062**	**20808-083**
	10	**34812-110**	**34813-110**			**20808-004**	**20808-085**
	12	**34812-112**	**34813-112**			**20808-064**	**20808-086**
	14	**34812-114**	**34813-114**			**20808-065**	**20808-087**
	21	**34812-121**	**34813-121**			**20808-066**	**20808-088**
	28	**34812-128**	**34813-128**			**20808-067**	**20808-089**
	42	**34812-142**	**34813-142**			**20808-068**	**20808-091**
		PCB depth 220 mm					
	8	**34812-108**	**34813-108**	**21101-853**	**21101-854**	**20808-062**	**20808-083**
	10	**34812-110**	**34813-110**			**20808-004**	**20808-085**
	12	**34812-112**	**34813-112**			**20808-064**	**20808-086**
	14	**34812-114**	**34813-114**			**20808-065**	**20808-087**
	21	**34812-121**	**34813-121**			**20808-066**	**20808-088**
	28	**34812-128**	**34813-128**			**20808-067**	**20808-089**
	42	**34812-142**	**34813-142**			**20808-068**	**20808-091**
	Width	**6 U Height**					
	HP	PCB depth 160 mm					
	8	**34812-608**	**34813-608**	**21101-855**	**21101-856**	**20808-062**	**20808-083**
	10	**34812-610**	**34813-610**			**20808-004**	**20808-085**
	12	**34812-612**	**34813-612**			**20808-064**	**20808-086**
	14	**34812-614**	**34813-614**			**20808-065**	**20808-087**
	21	**34812-621**	**34813-621**			**20808-066**	**20808-088**
	28	**34812-628**	**34813-628**			**20808-067**	**20808-089**
	42	**34812-642**	**34813-642**			**20808-068**	**20808-091**
		PCB depth 220 mm					
	8	**34812-608**	**34813-608**	**21101-855**	**21101-856**	**20808-062**	**20808-083**
	10	**34812-610**	**34813-610**			**20808-004**	**20808-085**
	12	**34812-612**	**34813-612**			**20808-064**	**20808-086**
	14	**34812-614**	**34813-614**			**20808-065**	**20808-087**
	21	**34812-621**	**34813-621**			**20808-066**	**20808-088**
	28	**34812-628**	**34813-628**			**20808-067**	**20808-089**
	42	**34812-642**	**34813-642**			**20808-068**	**20808-091**
Dimensions see page		7.82	7.82			7.82	7.82

1) SPQ (standard pack quantity): Part number includes 1 piece, but delivery is exclusively made in standard pack quantity (SPQ); please order at least the SPQ quantity or a multiple

Part no. includes one packing unit (PU); delivery is exclusively made in PU

Frame type plug-in units PRO ServicePLUS

Individual components Side panels, cover plates, guide rails

	Extruded side panel		Extruded side panel with cooling fins		Side panel, corner profile and side plate		Cover plate	
	Left	Right	Left	Right	Corner profile	Side plate	Without perforation	With perforation
	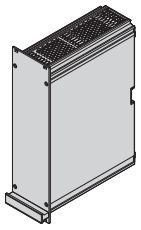 04808124	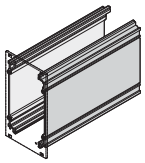 04808065	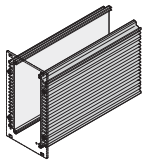 04811050		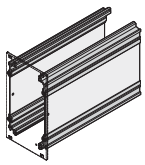 04808066	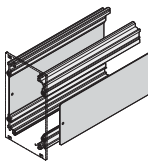 04808067	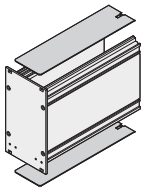 04808068	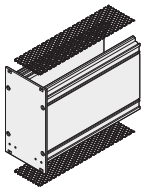 04808070
Supplied quantity for assembly of 5 frame type plug-in units	Al extrusion, colourless passivated, with groove for one PCB; 3 U symmetrical; 6 U asymmetrical, right and left side panel different) Side panels with and without cooling fins can be combined 1 piece (SPQ 10)[1]		Al extrusion, colourless passivated, with groove for one PCB; 3 U symmetrical; 6 U asymmetrical Side panels with and without cooling fins can be combined 1 piece (SPQ 10)[1]	1 piece (SPQ 10)[1]	Al extrusion, colourless passivated, with groove for one PCB, please order side plate separately 1 piece (SPQ 10)[1]	St, 1 mm, zinc-plated, is inserted into side panel rear angle 1 piece (SPQ 5)[1]	St, 1.0 mm, zinc-plated; PCB only possible in slot 1 1 piece (SPQ 10)[1]	St, 1.2 mm, Al, airflow rate in perforated area approx. 65 %; PCB only possible in slot 1 1 piece (SPQ 10)[1]
Width HP	**3 U Height**							
	PCB depth 160 mm							
8	34812-100 1 piece (SPQ 10)[1]	34812-100 1 piece (SPQ 10)[1]	34812-200	34812-200	34812-102	34812-103	34812-408	34812-958
10							34812-410	34812-960
12							34812-412	34812-962
14							34812-414	34812-964
21							34812-421	34812-971
28							34812-428	34812-978
42							34812-442	34812-992
	PCB depth 220 mm							
8	34813-100 1 piece (SPQ 10)[1]	34813-100 1 piece (SPQ 10)[1]	34813-200	34813-200	34813-102	34813-103	34813-408	34813-958
10							34813-410	34813-960
12							34813-412	34813-962
14							34813-414	34813-964
21							34813-421	34813-971
28							34813-428	34813-978
42							34813-442	34813-992
Width HP	**6 U Height**							
	PCB depth 160 mm							
8	34812-600 1 piece (SPQ 5)[1]	34812-601 1 piece (SPQ 5)[1]	–	34812-701	34812-102	34812-603	34812-408	34812-958
10							34812-410	34812-960
12							34812-412	34812-962
14							34812-414	34812-964
21							34812-421	34812-971
28							34812-428	34812-978
42							34812-442	34812-992
	PCB depth 220 mm							
8	34813-600 1 piece (SPQ 5)[1]	34813-601 1 piece (SPQ 5)[1]	–	34813-701	34813-102	34813-603	34813-408	34813-958
10							34813-410	34813-960
12							34813-412	34813-962
14							34813-414	34813-964
21							34813-421	34813-971
28							34813-428	34813-978
42							34813-442	34813-992
Dimensions see page	7.80	7.80	7.80	7.80	7.81	7.81	7.84	7.84

1) SPQ (standard pack quantity): Part number includes 1 piece, but delivery is exclusively made in standard pack quantity (SPQ); please order at least the SPQ quantity or a multiple

Frame type plug-in units PRO ServicePLUS

Individual components Rear panels, assembly material

	With perforation for guide rails		Rear panel			Rear panel fastener	Assembly kit
	Cover plate	Guide rail	Without cut-out	Cut-out for one connector	Cut-out for multiple connectors	for connection of rear panel with cover plate	
	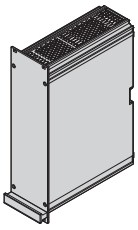 04808124	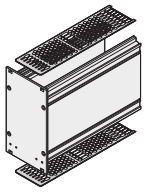 04808069	04808074	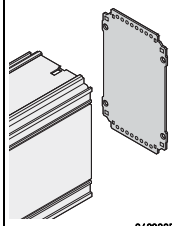 04808073	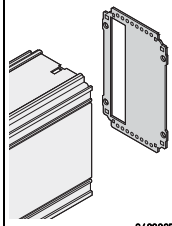 04808071	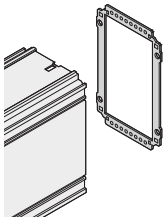 04808072	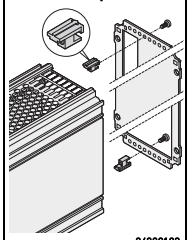 04808123	
Supplied quantity for assembly of 5 frame type plug-in units	St, 1.0 mm, zinc-plated; air flow rate in perforated area approx. 60 %; please order snap-in guide rails separately	PBT, UL 94 V-0, red, groove width 2 mm, PCB fixing required from slot 2, see page 7.79	St, 1.5 mm, zinc-plated	St, 1.5 mm, zinc-plated	St, 1.5 mm, zinc-plated, for EN 60603 (DIN 41612) connectors, types: B, C, D, F, H, Q, R, S	10 rear panel fasteners, Zn die-cast; 10 fixing screws; not suitable for cover plate with perforation	for mounting five 3 U or 6 U frame type plug-in units from ServicePLUS components: front panel, rear panel, side panel, cover plate and handle, description see page 7.78
	1 piece (SPQ 10)[1]	PU 10 pieces	1 piece (SPQ 5)[1]	1 piece (SPQ 5)[1]	1 piece (SPQ 5)[1]	PU 1 kit	PU 1 kit
Width HP	**3 U Height**						
	PCB depth 160 mm						
8	**34812-908**	**24812-101**	**34813-208**	**34812-208**	**34812-308**	**24812-401**	**24812-100**
10	**34812-910**		**34813-210**	**34812-210**	**34812-310**		
12	**34812-912**		**34813-212**	**34812-212**	**34812-312**		
14	**34812-914**		**34813-214**	**34812-214**	**34812-314**		
21	**34812-921**		**34813-221**	**34812-221**	**34812-321**		
28	**34812-928**		**34813-228**	**34812-228**	**34812-328**		
42	**34812-942**		**34813-242**	**34812-242**	**34812-342**		
	PCB depth 220 mm						
8	**34813-908**	**24812-101**	**34813-208**	**34812-208**	**34812-308**	**24812-401**	**24812-100**
10	**34813-910**		**34813-210**	**34812-210**	**34812-310**		
12	**34813-912**		**34813-212**	**34812-212**	**34812-312**		
14	**34813-914**		**34813-214**	**34812-214**	**34812-314**		
21	**34813-921**		**34813-221**	**34812-221**	**34812-321**		
28	**34813-928**		**34813-228**	**34812-228**	**34812-328**		
42	**34813-942**		**34813-242**	**34812-242**	**34812-342**		
Width HP	**6 U Height**						
	PCB depth 160 mm						
8	**34812-908**	**24812-101**	**34813-708**	**34812-708**	**34812-808**	**24812-401**	**24812-100**
10	**34812-910**		**34813-710**	**34812-710**	**34812-810**		
12	**34812-912**		**34813-712**	**34812-712**	**34812-812**		
14	**34812-914**		**34813-714**	**34812-714**	**34812-814**		
21	**34812-921**		**34813-721**	**34812-721**	**34812-821**		
28	**34812-928**		**34813-728**	**34812-728**	**34812-828**		
42	**34812-942**		**34813-742**	**34812-742**	**34812-842**		
	PCB depth 220 mm						
8	**34813-908**	**24812-101**	**34813-708**	**34812-708**	**34812-808**	**24812-401**	**24812-100**
10	**34813-910**		**34813-710**	**34812-710**	**34812-810**		
12	**34813-912**		**34813-712**	**34812-712**	**34812-812**		
14	**34813-914**		**34813-714**	**34812-714**	**34812-814**		
21	**34813-921**		**34813-721**	**34812-721**	**34812-821**		
28	**34813-928**		**34813-728**	**34812-728**	**34812-828**		
42	**34813-942**		**34813-742**	**34812-742**	**34812-842**		
Dimensions see page	7.84	7.84	7.83	7.83	7.83		

1) SPQ (standard pack quantity): Part number includes 1 piece, but delivery is exclusively made in standard pack quantity (SPQ); please order at least the SPQ quantity or a multiple
Part no. includes one packing unit (PU); delivery is exclusively made in PU

Frame type plug-in units PRO ServicePLUS

Individual components Fixing material (100 pieces)

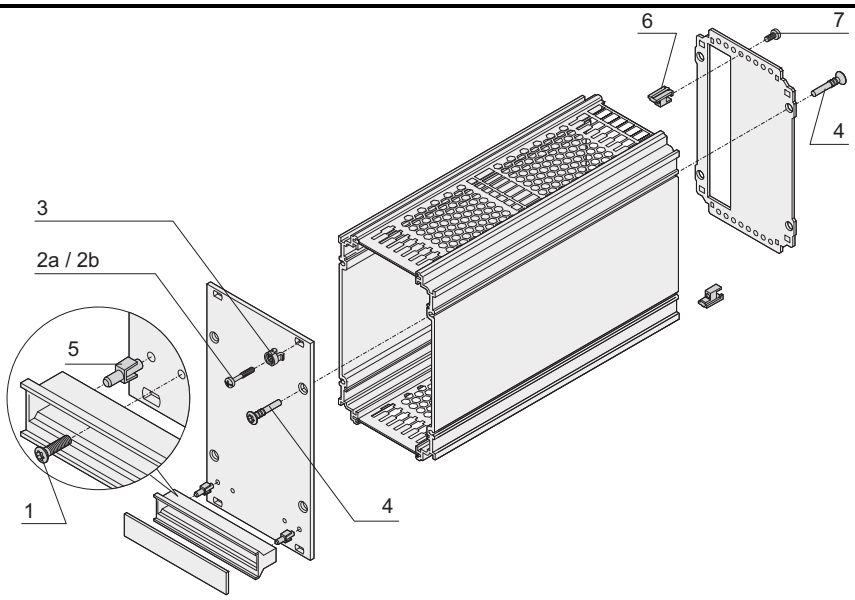

Fixing parts	Item		Required quantity per plug-in unit	Description	Qty/PU	Part no.
Fixing parts for mounting the module in subrack or case						
Torx panhead screw, M2.5 x 10, St, zinc-plated, self-forming thread	1	aza45940	2	Assembly of handle on front panel	100	**24560-179**
Pozidrive/slotted collar screw M2.5 × 11, St, nickel-plated	2a	aza46586	4 / 6* 06107050	Mounting of front panel on horizontal rail with threaded insert pushed in to front	100	**21100-748**
Pozidrive/slotted collar screw M2.5 × 12.3, St, nickel-plated	2b	aza46586	4 / 6* 06107051	Front panel is fitted to horizontal rail with threaded insert pushed in to rear in the standard position	100	**21101-101**
Plastic sleeves for form hole 5.9 x 3.3, PA, UL 94 V-2, grey	3	aza45933	4 / 6*	Is needed to fix collar screws	100	**21100-464**
Fixing parts for mounting the module						
Torx raised countersunk panhead screw 3 x 20, St, nickel-plated	4	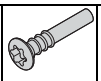 06708052	8	Assembly of front panel and rear panel on extruded side panel/rear extrusion of side panel	100	**24812-501**
Fixing clip for trapeziform plastic handle PPE UL 94 V 0, black	5	04608090	2	Alignment aid for handle on front panel	100	**21101-239**
Rear panel fastener Zn die-cast	6	04808128	2	To stabilise rear panel with wide frame-type plug-in units	100	**24812-402**
Torx panhead screw M2.5 × 10, St, nickel-plated	7	aza45940	2	To fix rear panel fastener or board fixing	100	**24560-148**
Board support (slot 1) Zn die-cast		04808126	2	Board support (slot 1) see page 7.79	50 pairs	**24812-202**
Board support (from slot 2) Zn die-cast		04808127	2	Board support (from slot 2) see page 7.79	50 pairs	**24812-302**
Torx panhead screw M2.5 × 6, St, nickel-plated		aza45940	2	Is needed for board fixing without connector see page 7.79	100	**24560-178**

* on 42 HP EMC shielded frame type plug-in units

■ Further collar screws and sleeves see page 7.107

Frame type plug-in units PRO ServicePLUS

Individual components Board fixing

	Board fixing slot 1	Board fixing from slot 2	
	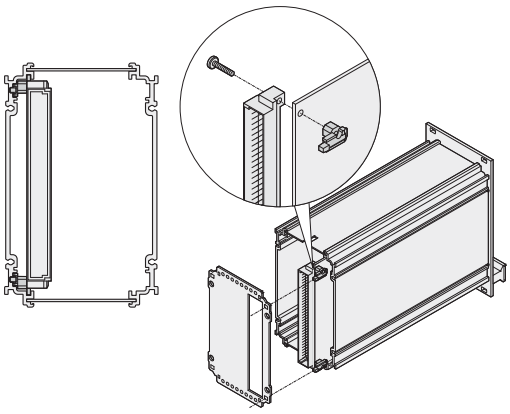	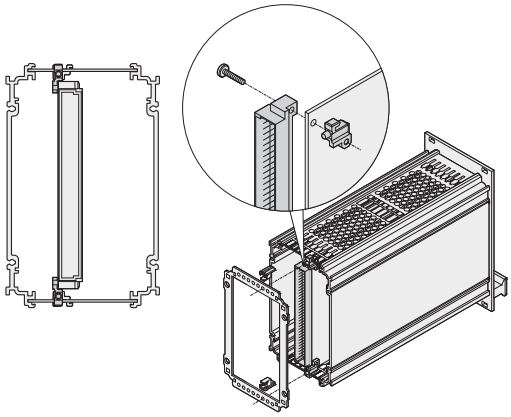	
	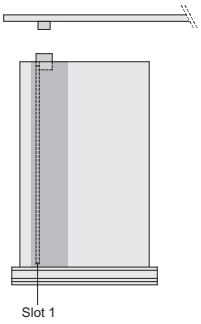	With connector from slot 2 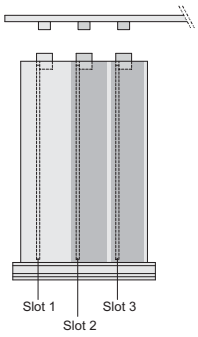	Without connector from slot 2 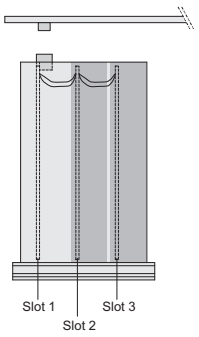
	04808118 04808109 04808129	04808119 04808110 bga42785 kaa46417	
	Zn die-cast, Torx panhead screw M2.5 x 10; PCB is pushed into the guiding groove of the left side panel/ side panel rear angle, is fixed with rear panel	Zn die-cast, Torx panhead screw M2.5 x 10; PCB is pushed into guide rail, is fixed with rear panel	
Height	**PU 5 pair**	**PU 5 pair**	
3 U	**24812-201**	**24812-301**	
6 U	**24812-201**	**24812-301**	
Assembly kits		With connector from slot 2	Without connector from slot 2
Torx panhead screw, M2.5 x 6, St, nickel-plated, PU 100 pieces; is needed for board fixing without connector	**24560-178** aza45940	–	**24560-178**
Connector mounting on PCB, for 6 U frame type plug-in units (centre) Torx panhead screw M2.5 x 10, nut M2.5; PU 10 pieces (screw + nut)	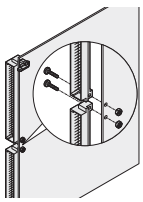 **24812-600** 04808120	**24812-600**	

Frame type plug-in units PRO

Dimensions Side panel without cooling fins

3 U

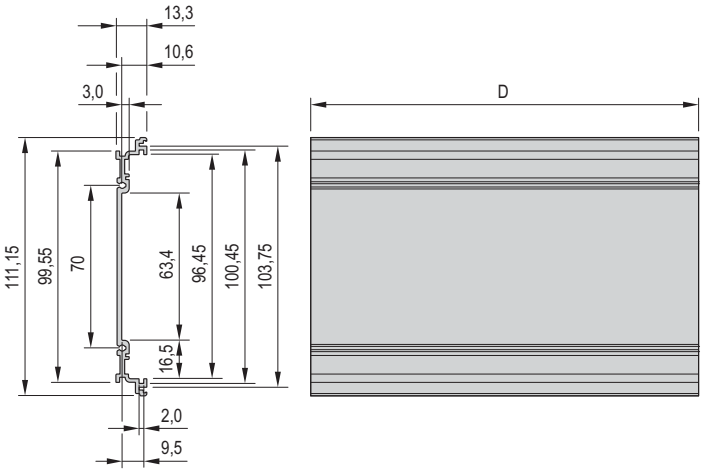

6 U

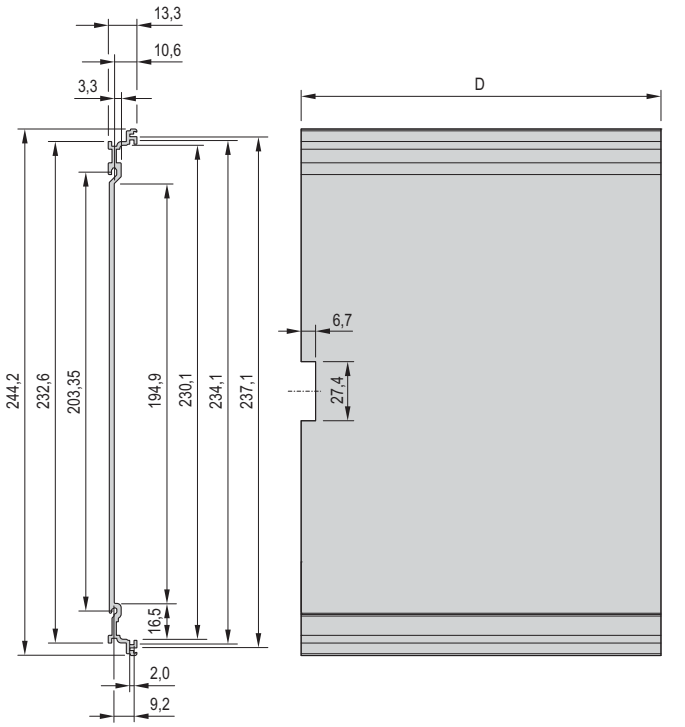

Depth = 167/227 mm

Dimensions Side panel with cooling fins

3 U

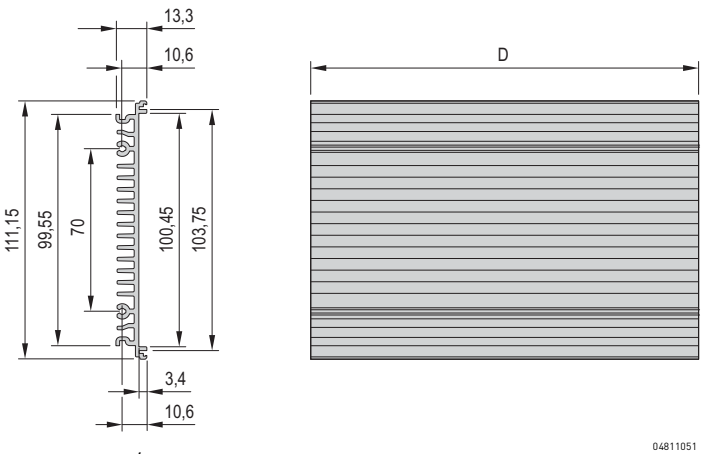

6 U

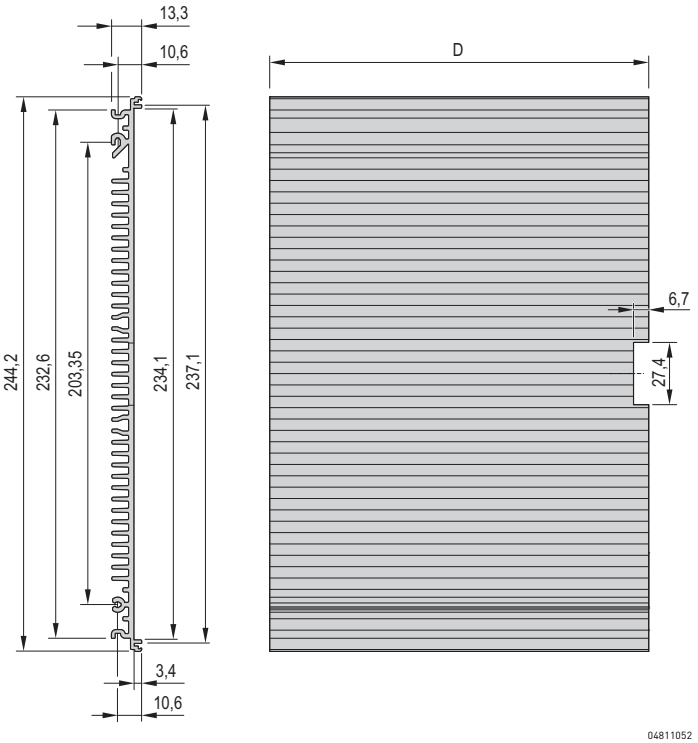

Depth = 167/227 mm

Frame type plug-in units PRO

Dimensions Side panel rear angle

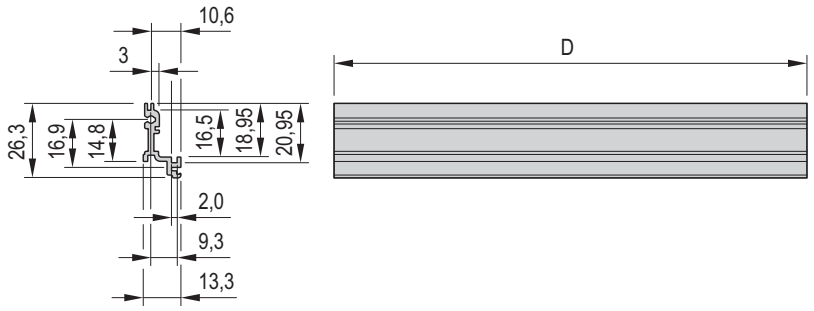

04808103

Depth = 167/227 mm

Dimensions Side plate

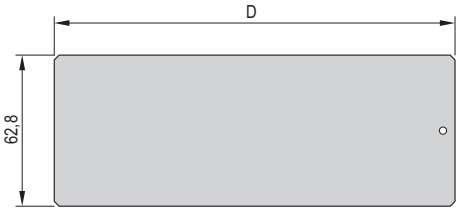

04808100

3 U for side panel rear angle

6

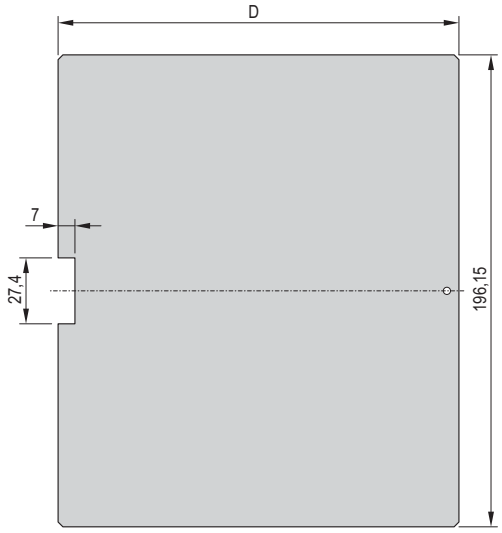

04808099

6 U for side panel rear angle

Frame type plug-in units PRO

Dimensions Front panels

Unshielded

3 U

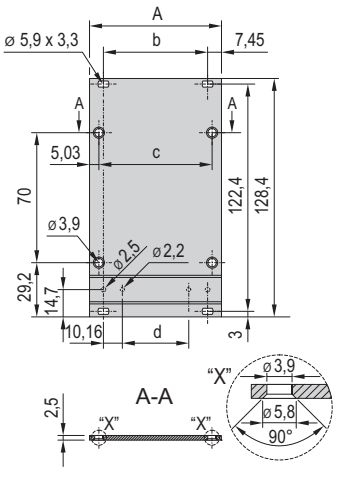

04808086

6 U

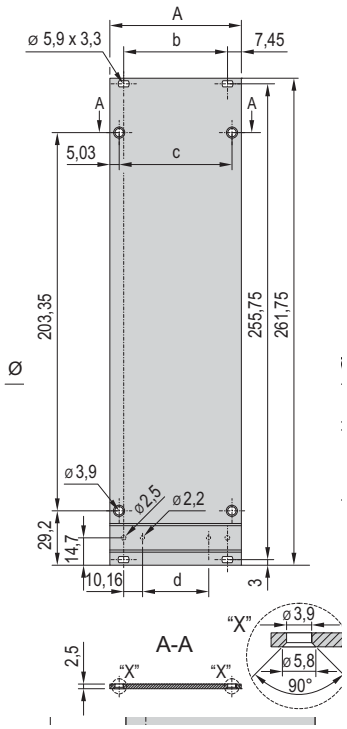

04808087

Shieldable, for EMC textile gasket

3 U

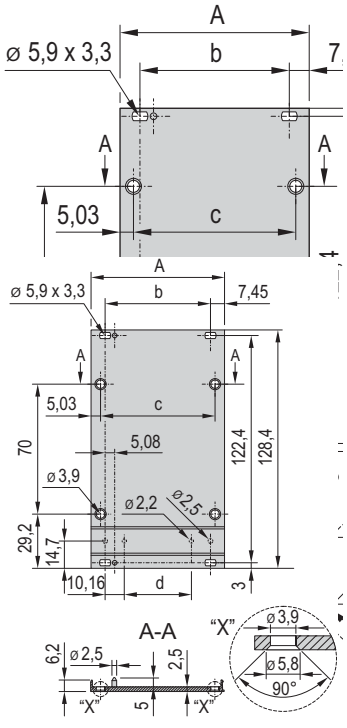

04808088

6 U

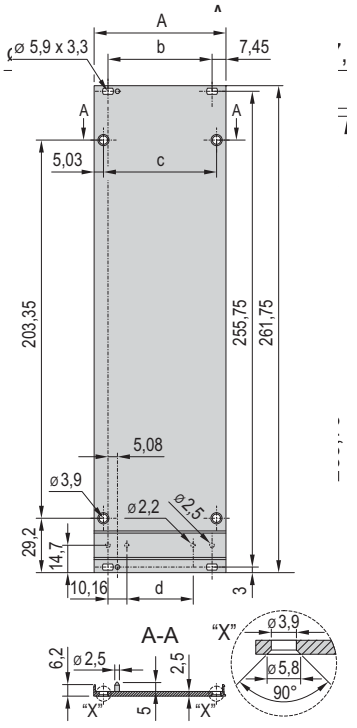

04808089

Dimensions table

Width	A mm	b mm	c mm	d mm
8 HP	40.30	25.40	30.24	5.08
10 HP	50.46	35.56	40.40	15.24
12 HP	60.62	45.72	50.56	25.40
14 HP	70.78	55.88	60.72	35.56
21 HP	106.34	91.44	96.28	71.12
28 HP	141.90	127.00	131.84	106.68
42 HP	213.02	198.12	202.96	177.80

Dimensions Front handle

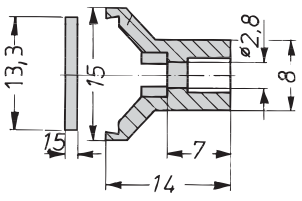

A4-328e

Dimensions table

Width HP	Width mm
8 HP	39.2
10 HP	49.4
12 HP	59.6
14 HP	69.7
21 HP	105.2
28 HP	140.8
42 HP	212.0

Frame type plug-in units PRO

Dimensions Rear panel 3 U

Without cut-out

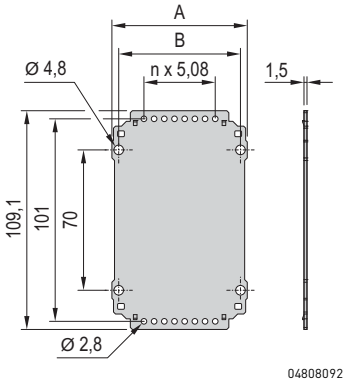

For one connector

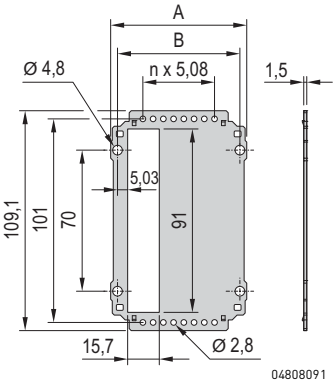

For multiple connectors

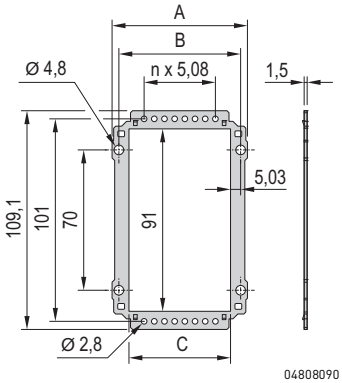

Dimensions table

HP	A mm	B mm	C mm	n
8 HP	37.04	30.24	20.18	1
10 HP	47.20	40.40	30.34	3
12 HP	57.36	50.56	40.50	5
14 HP	67.52	60.72	50.66	7
21 HP	103.08	96.28	86.22	14
28 HP	138.64	131.84	121.78	21
42 HP	209.76	202.96	192.90	35

Dimensions Rear panel 6 U

Without cut-out

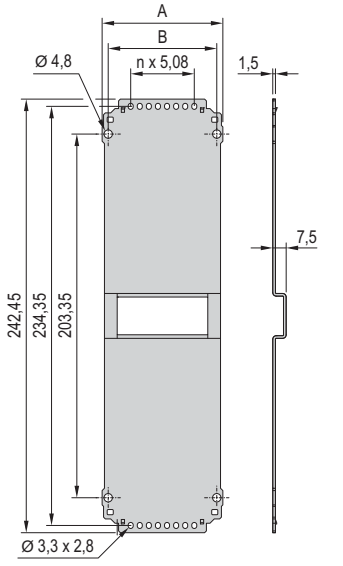

For one connector

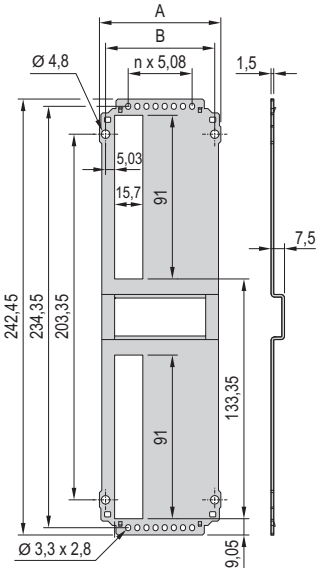

For multiple connectors

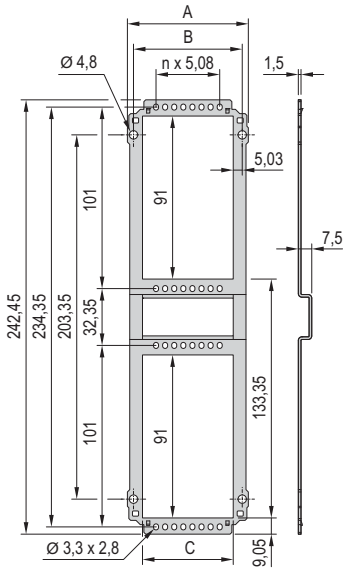

Dimensions table

HP	A mm	B mm	C mm	n
8 HP	37.04	30.24	20.18	1
10 HP	47.20	40.40	30.34	3
12 HP	57.36	50.56	40.50	5
14 HP	67.52	60.72	50.66	7
21 HP	103.08	96.28	86.22	14
28 HP	138.64	131.84	121.78	21
42 HP	209.76	202.96	192.90	35

Frame type plug-in units PRO

Dimensions Guide rail

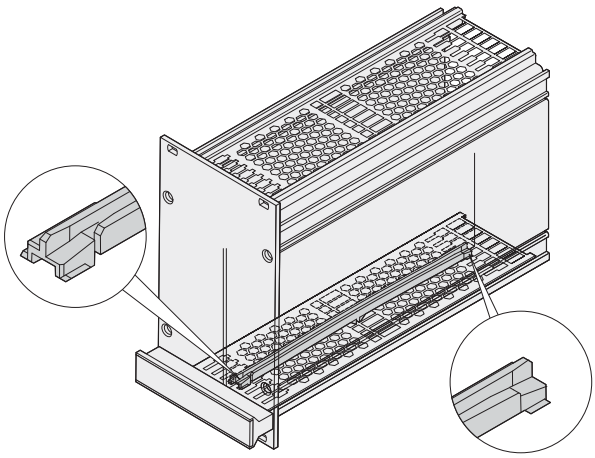

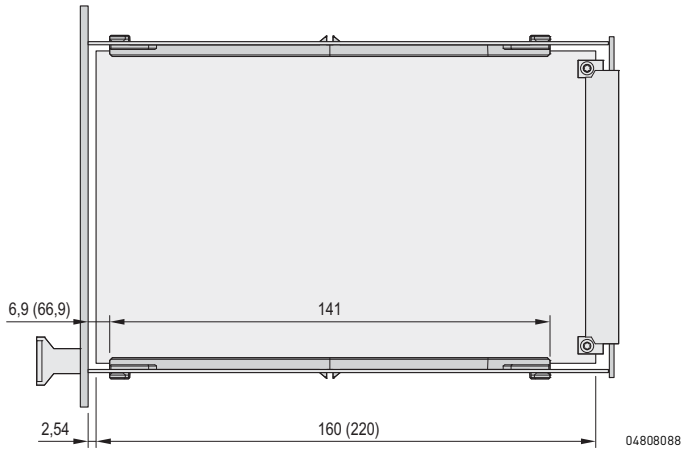

Dimensions Cover plates

without perforation

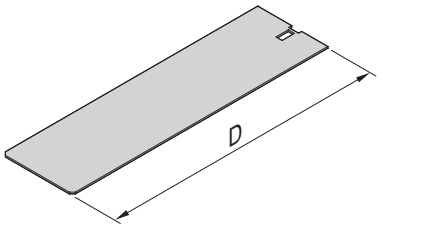

with perforation

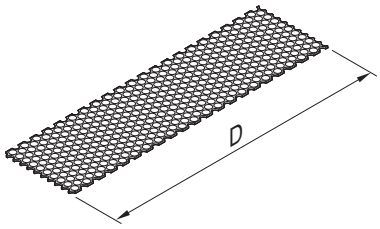

for guide rail mounting

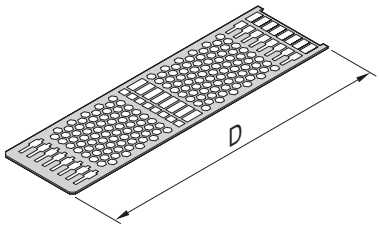

D = 167/227 mm

Frame type plug-in units PRO

Dimensions — Mounting instructions for guide rails in frame type plug-in units

Slot 1 + slot 2

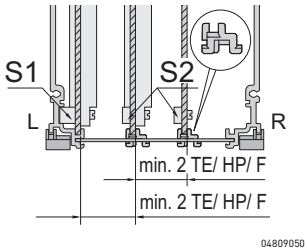

Slot 2

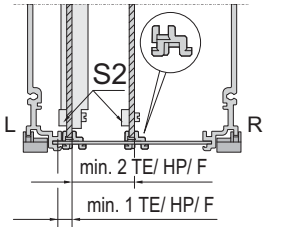

Front view

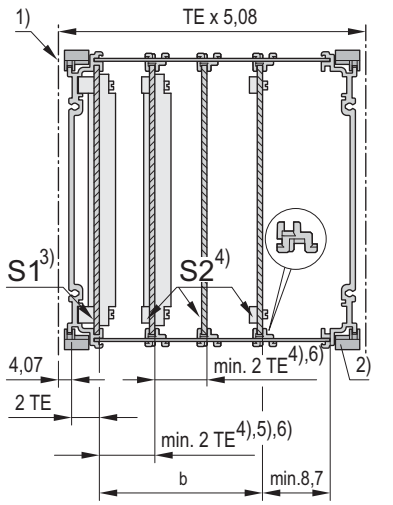

- Mounting pitch for guide rails: 1 HP
- Min. distance between 2 guide rails: 2 HP

Width of frame type plug-in unit	b	Max. number of PCBs mountable	
HP	mm	slot 1	from slot 2
8	–	1	1
	5.08	–	1 5)
10	10.16	1	1 6)
	15.24	–	2 5)6)
12	20.32	1	2 6)
	25.40	–	3 5) 6)
14	30.48	1	3 6)
	35.56	–	4 5) 6)
21	71.12	1	7 6)
	66.04	–	7 5) 6)
28	101.60	1	10 6)
	106.68	–	11 5) 6)
42	172.72	1	17 6)
	177.80	–	18 5) 6)

TE = HP = F
1) Division line
2) Guide rail rotated by 180° from standard position
3) The first PCB is held in the extruded side panel, corresponds to standard position (slot 1)
4) All additional PCBs are fitted into guide rails (from slot 2)
5) Min. 1 HP where slot 1 is not used (slot 2)
6) Dependent on construction of connector used (not every connector allows a 2 HP fitting)

Dimensions — Mounting space frame-type plug-in unit 3 U/6 U

Front view

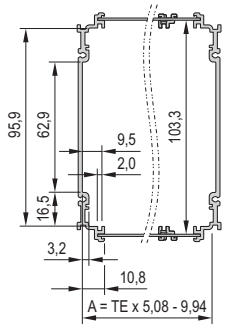

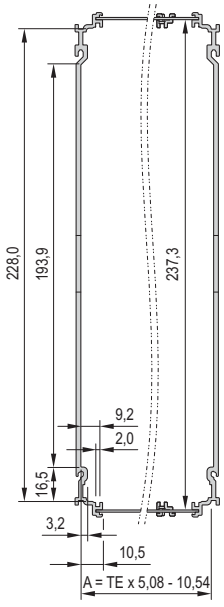

Dimensions table

Height	Width	A
U	HP	mm
3	8	30.70
3	10	40.86
3	12	51.02
3	14	61.18
3	21	96.74
3	28	132.30
3	42	203.42
6	8	30.10
6	10	40.26
6	12	50.42
6	14	60.58
6	21	96.14
6	28	131,70
6	42	202.82

Frame type plug-in units PRO with hood

Frame type plug-in units PRO with hood, 3/6 U, front panel shielded (textile gasket)

04808007

Illustration shows 12 HP width, side panel depth 167 mm

- Protects a PCB against mechanical damage and deflects electrostatic discharge; for euroboard formats
- Suitable in all subracks and these cases: ratiopacPRO/-air, propacPRO and compacPRO
- Useable connectors in accordance with EN 60603-2 (DIN 41612)
- 2 depths, for 160 mm and 220 mm boards

Delivery comprises (kit)

Item	Qty	Description
1	1	Front panel, U profile, 2.5 mm, front anodised, rear conductive, alignment pin pressed-in
2	1	Handle, grey, PPE, UL 94 V-1
3	1	Side panel, Al extrusion, colourless passivated, with groove for one PCB
4	1	Hood, Al, 1 mm, with perforation, rear panel integrated
5	1	EMC textile gasket
6	1	Assembly kit (incl. PCB fixing for slot 1)

ServicePLUS see page 7.74

Order Information

5 HP

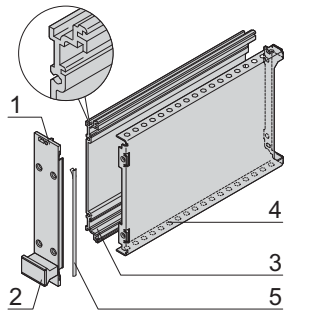

04808075

6 ... 14 HP

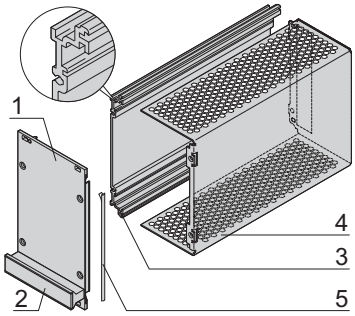

04808113

Height U	Width HP	Depth = 167 mm Part no.	Depth = 227 mm Part no.
3	5	24813-005	24813-055
3	6	24813-006	24813-056
3	7	24813-007	24813-057
3	10	24813-010	24813-060
3	12	24813-012	24813-062
3	14	24813-014	24813-064

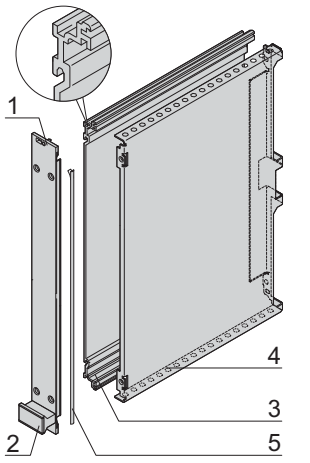

04808076

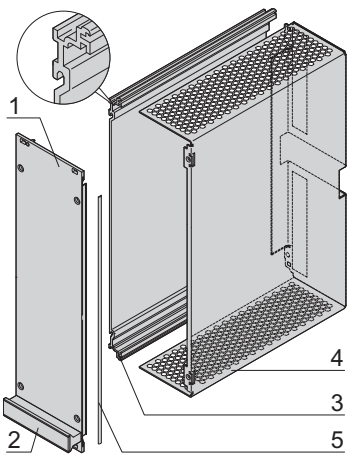

04808114

Height U	Width HP	Depth = 167 mm Part no.	Depth = 227 mm Part no.
6	5	24813-505	24813-555
6	6	24813-506	24813-556
6	7	24813-507	24813-557
6	10	24813-510	24813-560
6	12	24813-512	24813-562
6	14	24813-514	24813-564

- Dimension drawings see from page 7.88

Frame type plug-in units PRO with hood

Plug-in units PRO with hood, 3/6 U, front panel unshielded

04808002

Illustration shows 12 HP width, side panel depth 167 mm

- Protects a PCB against mechanical damage and deflects electrostatic discharge; for euroboard formats
- Suitable in all subracks and these cases: ratiopacPRO/-air, propacPRO and compacPRO
- Useable connectors in accordance with EN 60603-2 (DIN 41612)
- 2 depths, for 160 mm or 220 mm board

Delivery comprises (kit)

Item	Qty	Description
1	1	Front panel, Al, 2.5 mm, anodised, cut edges plain
2	1	Handle, grey, PPE, UL 94 V-1
3	1	Side panel, Al extrusion, colourless passivated, with groove for one PCB
4	1	Hood, Al, 1 mm, with perforation, rear panel integrated
5	1	Assembly kit (incl. PCB fixing for slot 1)

ServicePLUS see page 7.74

Order Information

5 HP

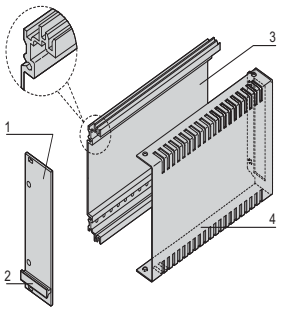

04808077

6 ... 14 HP

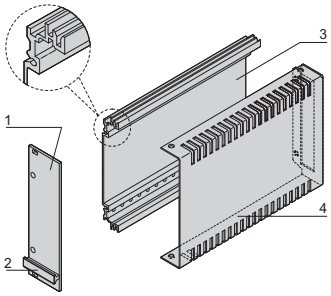

04808115

Height U	Width HP	Depth = 167 mm Part no.	Depth = 227 mm Part no.
3	5	**24812-005**	**24812-055**
3	6	**24812-006**	**24812-056**
3	7	**24812-007**	**24812-057**
3	10	**24812-010**	**24812-060**
3	12	**24812-012**	**24812-062**
3	14	**24812-014**	**24812-064**

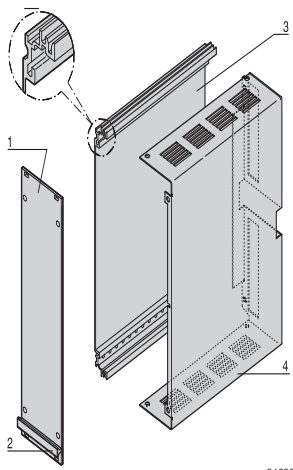

04808078

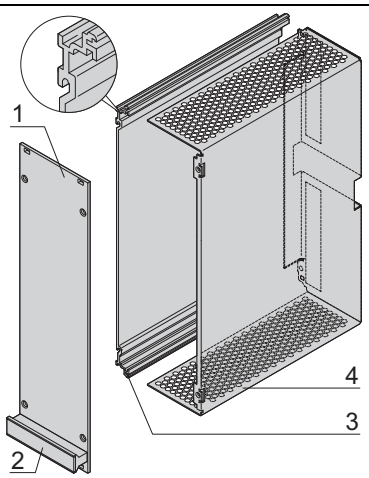

04808116

Height U	Width HP	Depth = 167 mm Part no.	Depth = 227 mm Part no.
6	5	**24812-505**	**24812-555**
6	6	**24812-506**	**24812-556**
6	7	**24812-507**	**24812-557**
6	10	**24812-510**	**24812-560**
6	12	**24812-512**	**24812-562**
6	14	**24812-514**	**24812-564**

- Dimension drawings see from page 7.88

Frame type plug-in units PRO with hood

Dimensions Cross-section frame-type plug-in units PRO with hood 3 U/6 U

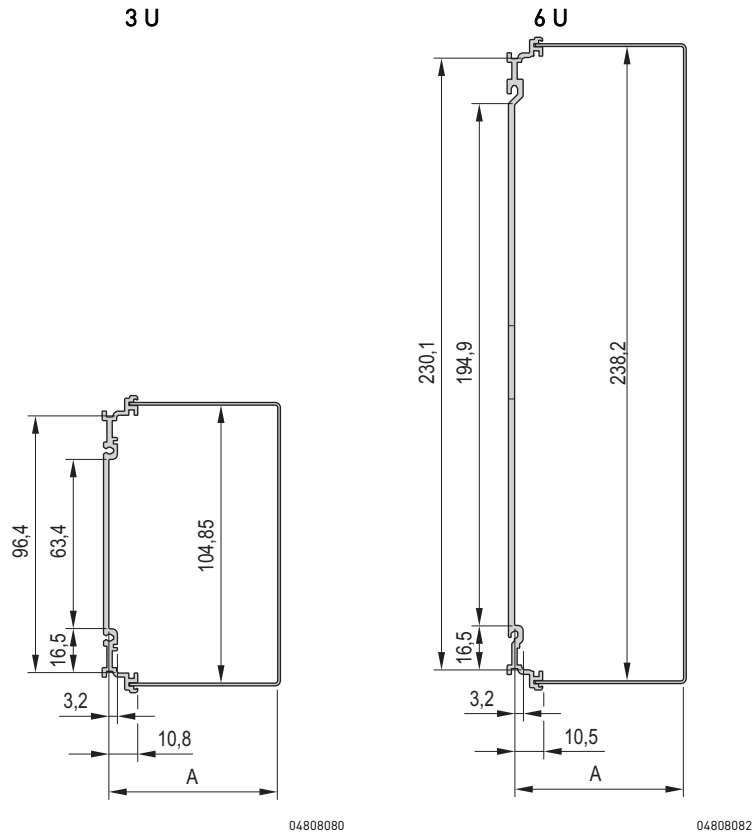

Dimensions table

Height U	Width HP	A mm
3	5	17.52
3	6	22.60
3	7	27.68
3	10	42.92
3	12	53.08
3	14	63.24
6	5	17.22
6	6	22.30
6	7	27.38
6	10	42.62
6	12	57.78
6	14	62.94

Dimensions Front handle

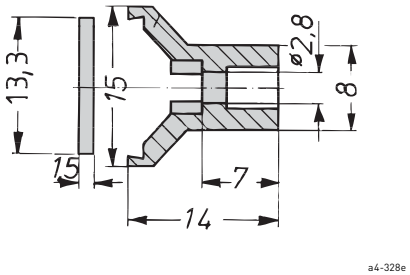

Dimensions table

Width HP	Width mm
5	24.0
6	29.0
7	34.1
10	49.4
12	59.6
14	69.7

Frame type plug-in units PRO with hood

Dimensions 3/6 U frame-type plug-in units PRO with hood

3 U Front panel shieldable

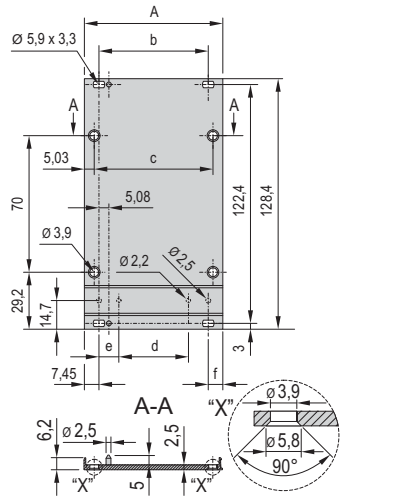

04808052

Front panel unshielded

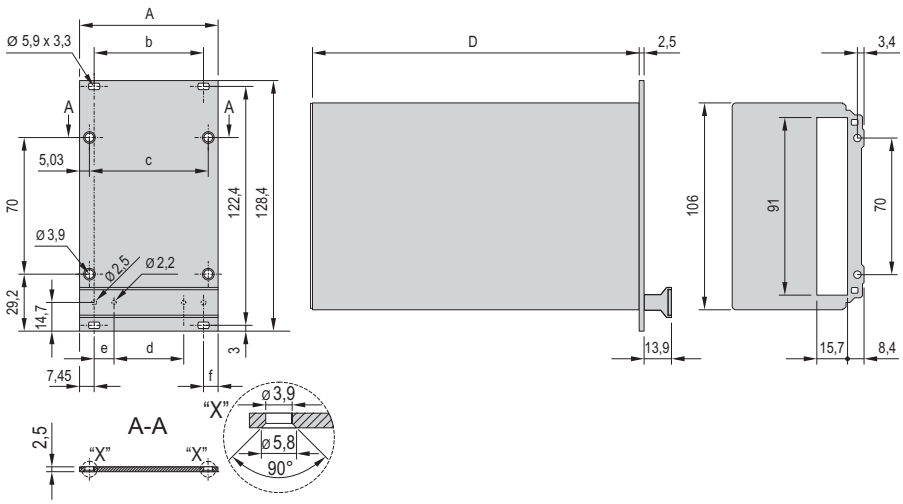

04808111

6 U Front panel shieldable

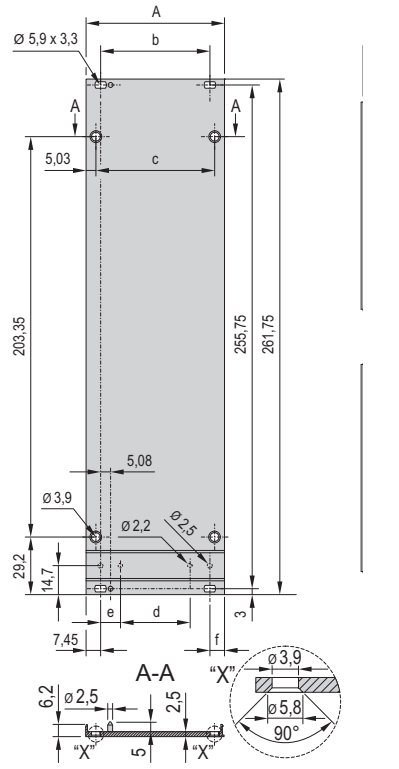

04809053

Front panel unshielded

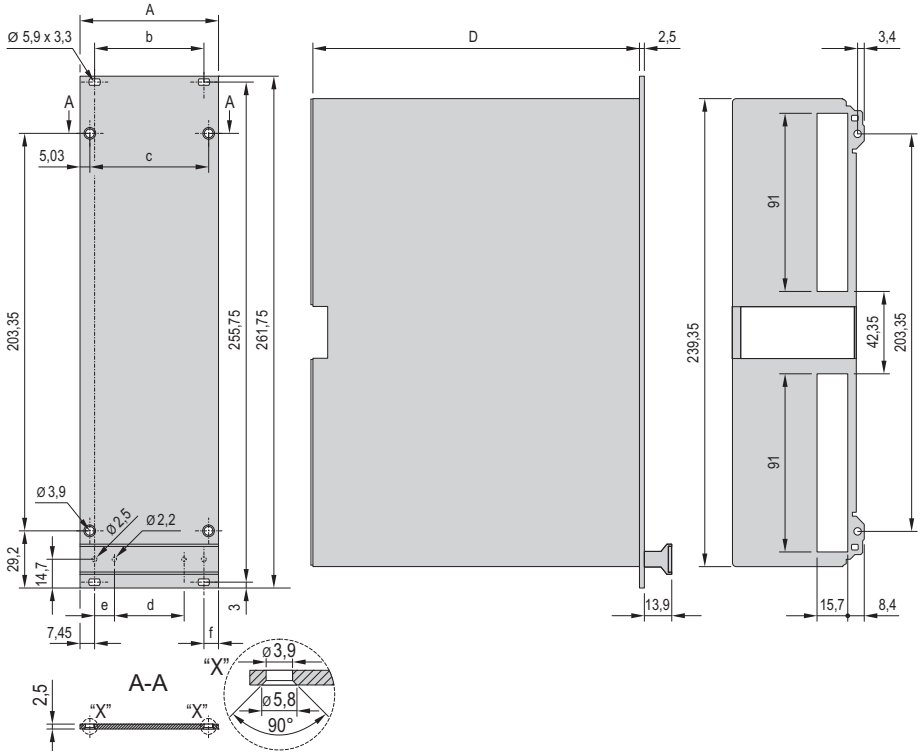

04808112

Front panel

5 HP

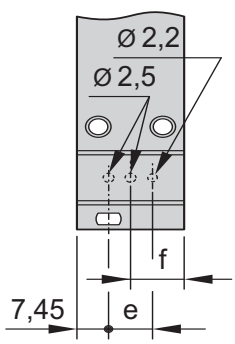

04809067

6 + 7 HP

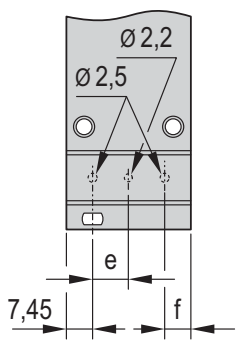

04809066

Dimensions table

Width	A	b	c	d	e	f	Depth D
HP	mm	mm	mm	mm	mm	mm	mm
5	25.06	-	15.00	-	10.16	12.53	167 mm/ 227 mm
6	30.14	-	20.08	-	10.16	7.45	
7	35.22	-	25.16	-	10.16	7.45	
10	50.46	35.56	40.40	15.24	10.16	7.45	
12	60.62	45.72	50.56	25.40	10.16	7.45	
14	70.78	55.88	60.72	35.56	10.16	7.45	

HF frame type plug-in units

HF frame type plug-in units, 3 U kits, front panel shielded

- With high shielding from high-frequency radiation
- To accept boards in HP grid increments
- Solid body on all sides, with cooling fins

Delivery comprises (kit)

Item	Qty	Description
1	1	Body tube, Al extrusion, black anodised, cut edges plain
2	1	Front panel, Al, 2.5 mm, with lateral grooves for EMC gasket (stainless steel), alignment pin pressed-in, front anodised, rear iridescent green chromated
3	1	Plastic handle, trapeziform, PPE, grey, identification plate, Al, anodised, cut edges plain
4	1	Rear panel, Al, 1.5 mm, etched without cut-outs
5	2	EMC gasket (steel, stainless)
6	1	Assembly kit

ServicePLUS see page 7.74

Technical data

HF plug-in unit	Thermal resistance K/W	
HP	Depth = 167 mm	Depth = 227 mm
7	1.68	1.51
10	1.62	1.46
12	1.56	1.40
14	1.50	1.35
21	1.06	0.95
28	0.94	0.85

Order Information

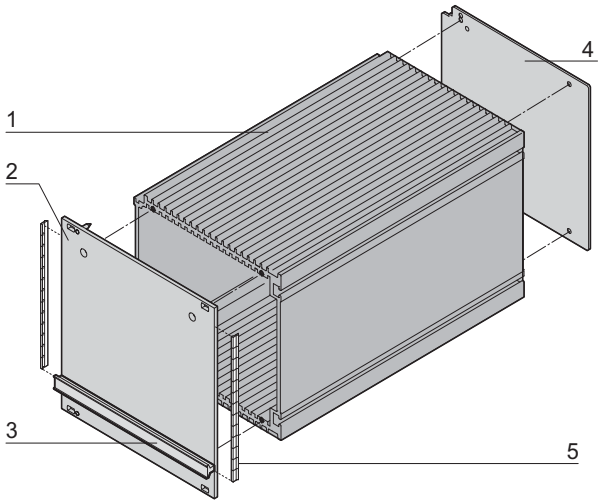

Height U	Width HP	Depth = 167 mm Part no.	Depth = 227 mm Part no.
3	7	20809-529	20809-536
3	10	20809-530	20809-537
3	12	20809-531	20809-538
3	14	20809-532	20809-539
3	21	20809-533	20809-540
3	28	20809-534	20809-541

Note

- Dimension drawings see from page 7.94

HF frame type plug-in units ServicePLUS

Individual components HF body tube, front panels with handle, rear panels

Order Information

Height U	Width HP	HF body tube	Shieldable front panel, with handle	Shieldable front panel, with handle: for EMC gasket (stainless steel)	Shieldable front panel, with handle: EMC gasket (stainless steel)	Shieldable front panel, with handle: Assembly tool	Rear panel: without cut-out	Rear panel: with cut-out
		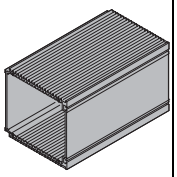 KAA45832	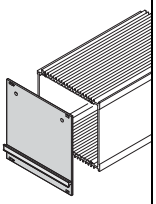 KAA45831	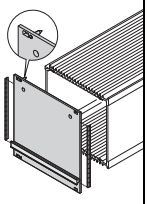 04807074	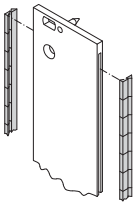 bga45760	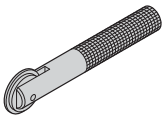 azs45937	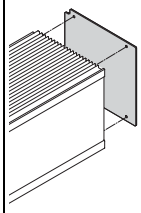 04807075	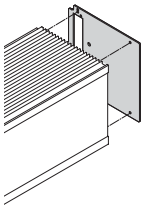 KAA45834
		Al extrusion, black anodised, cut edges plain	Al, 2.5 mm, front anodised, rear iridescent green chromated; static handle, grey, PPE, UL 94 V-1	Al, 2.5 mm, front anodised, rear iridescent green chromated, with lateral grooves for stainless steel EMC gasket (please order separately), alignment pin pressed-in, trapeziform handle, grey, PPE, UL 94 V-1	inserted laterally into the grooves of the front panel	to mount the EMC gasket (stainless steel)	Al, 1.5 mm, etched	Al, 2.5 mm, etched, cut-out for connector types EN 60603 (DIN 41612); 7 HP: B, C, D, R; 10 - 28 HP: B, C, D, R, F, H, MF, MH
		1 piece (SPQ 5)[1]	1 piece (SPQ 5)[1]	1 piece (SPQ 5)[1]	PU 100 pieces	1 piece	1 piece (SPQ 5)[1]	1 piece (SPQ 5)[1]
		PCB depth 160 mm						
3	7	30809-667	20838-001	20838-093	21101-705	24560-270	30809-635	30809-641
	10	30809-677	20838-002	20838-094			30809-636	30809-642
	12	30809-675	20838-003	20838-095			30809-637	30809-643
	14	30809-673	20838-004	20838-096			30809-638	30809-644
	21	30809-671	20838-005	20838-097			30809-639	30809-645
	28	30809-669	20838-006	20838-098			30809-640	30809-646
		PCB depth 220 mm						
3	7	30809-668	20838-001	20838-093	21101-705	24560-270	30809-635	30809-641
	10	30809-678	20838-002	20838-094			30809-636	30809-642
	12	30809-676	20838-003	20838-095			30809-637	30809-643
	14	30809-674	20838-004	20838-096			30809-638	30809-644
	21	30809-672	20838-005	20838-097			30809-639	30809-645
	28	30809-670	20838-006	20838-098			30809-640	30809-646
		Depth 1000 mm (without thread for front panel and rear panel)						
3	7	30809-679	–	–	–	–	–	–
	10	30809-698						
	12	30809-699						
	14	30809-680						
	21	30809-681						
	28	30809-682						
Dimensions see page		7.94	7.95				7.94	

1) SPQ (standard pack quantity): Part number includes 1 piece, but delivery is exclusively made in standard pack quantity (SPQ); please order at least the SPQ quantity or a multiple

Part no. includes one packing unit (PU); delivery is exclusively made in PU

HF frame type plug-in units

Individual components Slide nuts, fixing for PCBs, mounting kit

Order Information

Height U	Width HP	Slide nut M 2.5	Slide nut M 3	Fixing for PCBs – Individual components top	Fixing for PCBs – Individual components bottom	Fixing for PCBs – Complete assembly kit	Fixing material for one HF frame type plug-in unit
		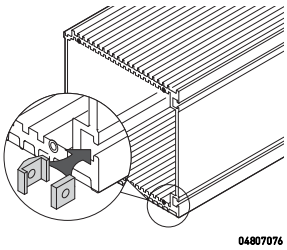 04807076		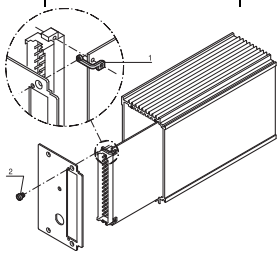 KAA45843			
		width across flats (WAF) 7, for insertion into HF body tube, top and bottom, provides lateral fixing (on right)		bracket (stainless steel), 1.5 mm; please order retention screws separately		bracket top and bottom (stainless steel), 1.5 mm; incl. two cheesehead screws M2.5 x 4	for complete assembly of a 3 U HF frame type plug-in unit: front panel, rear panel and handle, description see page 7.93
		PU 100 pieces	PU 100 pieces	1 piece (SPQ 10)[1)]	1 piece (SPQ 10)[1)]	PU 1 kit	PU 1 kit
3	7	21100-112	21100-289	30809-701	30809-700	21101-937	21100-105
	10						
	12						
	14						
	21						
	28						
Accessories							
Cheesehead screw M2.5 × 4, St, nickel-plated, PU 100 pieces		–	–	21100-431	21100-431	–	–

1) SPQ (standard pack quantity): Part number includes 1 piece, but delivery is exclusively made in standard pack quantity (SPQ); please order at least the SPQ quantity or a multiple

Part no. includes one packing unit (PU); delivery is exclusively made in PU

HF frame type plug-in units

Individual components Fixing material (100 pieces)

Order Information

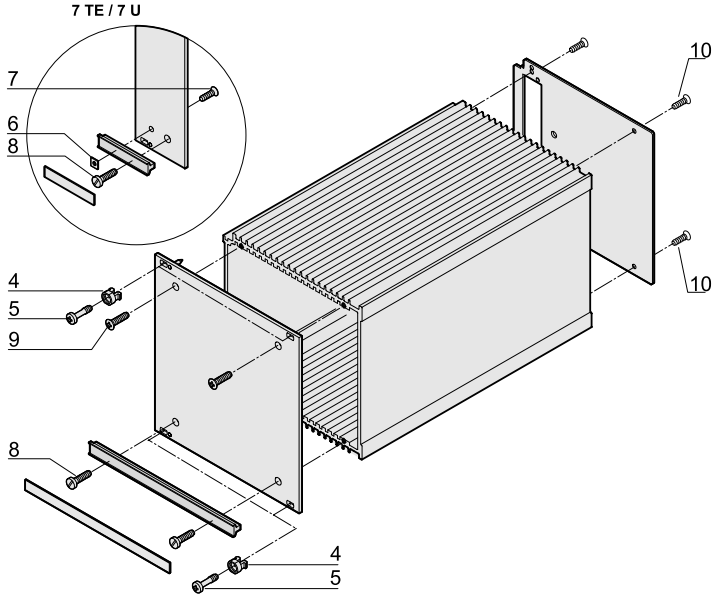

Description	Item		Required quantity per plug-in unit		Description	Qty/PU	Part no.
Fixing parts for mounting the module in subrack or case							
Plastic sleeve for form hole 5.9 x 3.3, PA, UL 94 V-2, grey	4	aza45933	2 at 7 HP 4 at > 7 HP		Front panel is fitted to horizontal rail with threaded insert pushed in to front	100	**21100-464**
Pozidrive/slotted collar screw M2.5 × 11, St, nickel-plated	5	aza46586	2 at 7 HP 4 at > 7 HP	06107050	Front panel is fitted to horizontal rail with threaded insert pushed in to front	100	**21100-748**
Pozidrive/slotted collar screw M2.5 × 12.3, St, nickel-plated	5	aza46586	2 at 7 HP 4 at > 7 HP	06107051	Front panel is fitted to horizontal rail with threaded insert pushed in to rear in the standard position	100	**21101-101**
Fixing parts for mounting the module							
Square nut DIN 562, M2.5,St, nickel-plated	6	06705050	1 at 7 HP		To mount handle on front panel	100	**21100-359**
Pozidrive countersunk screw M2.5 × 12, St, nickel-plated	7	aza45177	1 at 7 HP		To mount handle on front panel	100	**21100-507**
Slotted cheesehead screw M2.5 × 16, St, nickel-plated	8	aza45467	1 at 7 HP 2 at > 7 HP		To mount handle and front panel on HF body tube	100	**21100-150**
Raised Pozidrive countersunk panhead screw M2.5 × 8, St, nickel-plated	9	06702056	2		To mount front panel on HF body tube	100	**21100-429**
Pozidrive countersunk screw M2.5 × 6, St, nickel-plated	10	06702056	4		To mount rear panel on HF body tube	100	**21100-515**

Note

- Further collar screws and sleeves see page 7.107

HF frame type plug-in units

Dimensions HF body tube

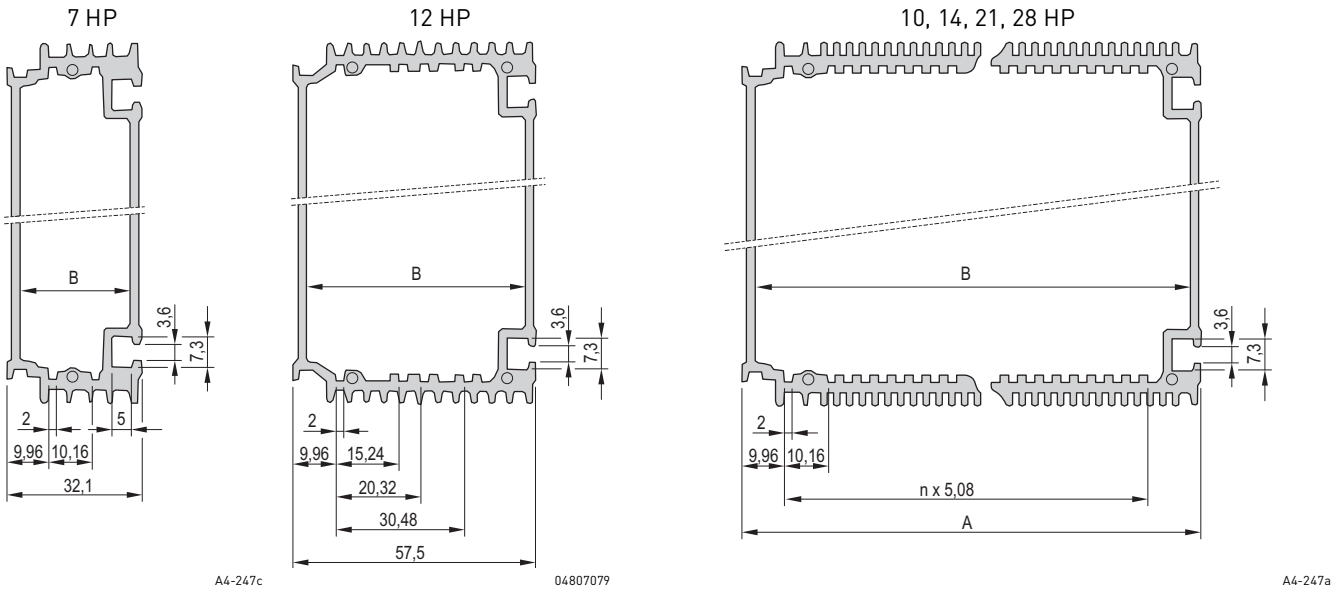

Dimensions table

Dimension	7 HP	10 HP	12 HP	14 HP	21 HP	28 HP
mm						
n	–	3 × 5.08	–	7 × 5.08	14 × 5.08	21 × 5.08
A	–	47.34	–	67.66	103.22	138.78
B	26.34	41.58	51.74	61.90	97.46	133.02

Dimensions Rear panel with/without cut-out for connector

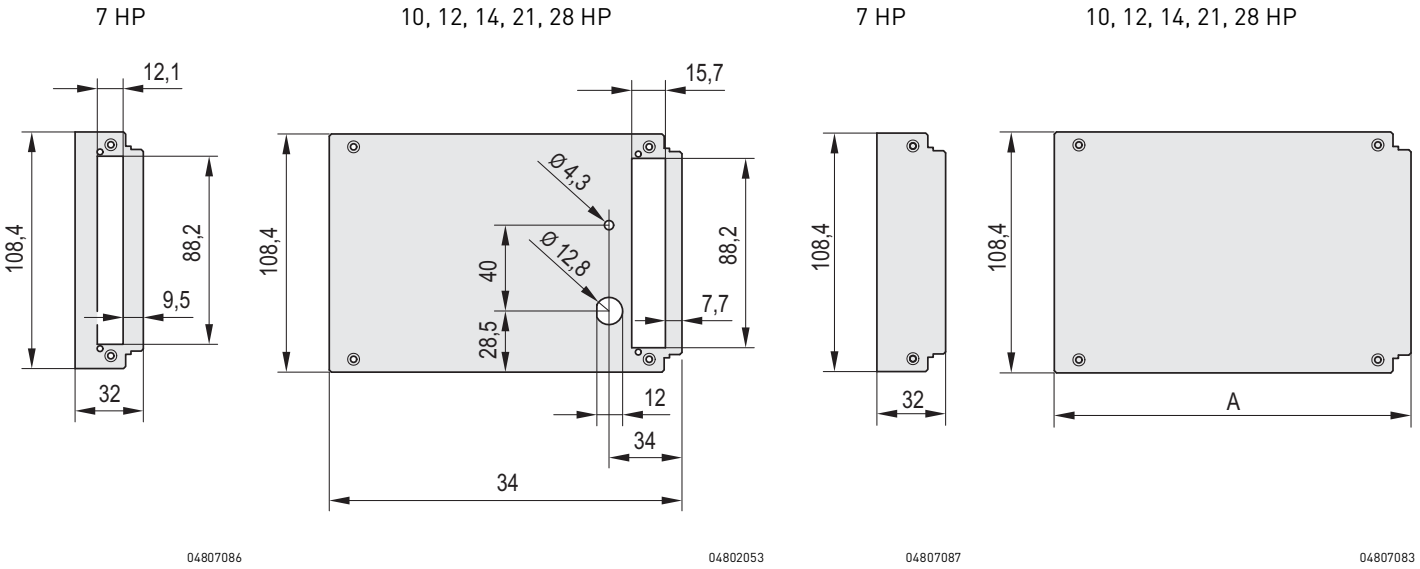

Dimensions table

Width	A
	mm
7 HP	32.00
10 HP	47.24
12 HP	57.40
14 HP	67,40
21 HP	103.12
28 HP	136.68

HF frame type plug-in units

Dimensions Front panels

Unshielded

7 HP

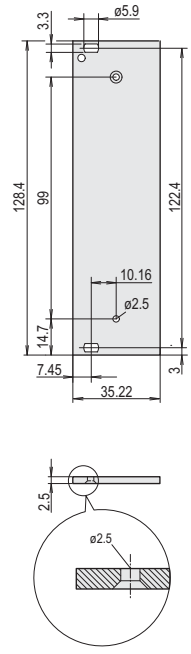

KAA43073

10, 12, 14, 21, 28 HP

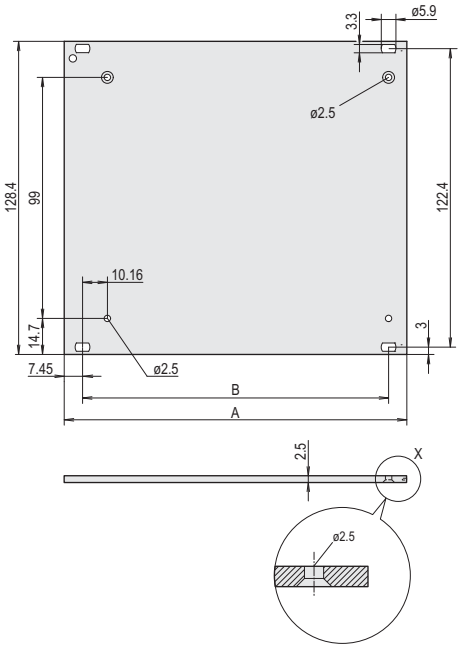

04807084

Shieldable, slotted for EMC stainless steel gasket

7 HP

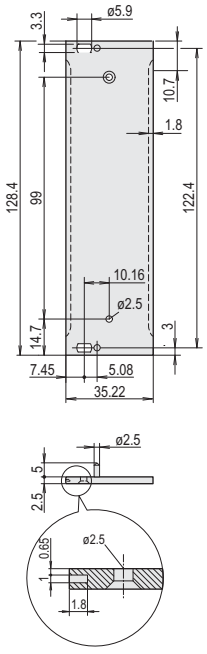

04807085

10, 12, 14, 21, 28 HP

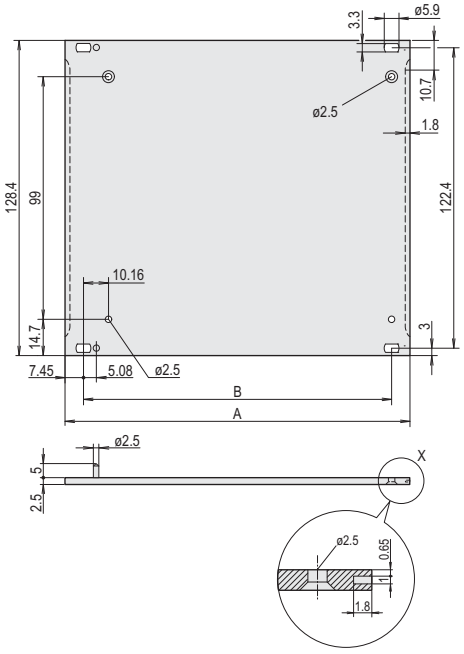

04803052

Dimensions table

Width	A	w
	mm	mm
7 HP	32.22	–
10 HP	50.46	35.56
12 HP	60.62	45.72
14 HP	70.78	55.88
21 HP	106.34	91.44
28 HP	141.90	127.00

Dimensions Front handle

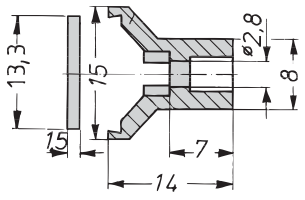

A4-328e

Dimensions table

Width	Width
HP	mm
10 HP	49.4
12 HP	59.6
14 HP	69.7
21 HP	105.2
28 HP	140.8

Frame type plug-in units

Adaptor for horizontal rail mounting

04812021

11395007

Example: horizontal rail adaptor with lip for 19" PSU

- For fitting of e.g. subracks, wall mounted cases, frame type plug-in units or PSUs on a horizontal rail with lip
- Adaptor is bolted to the desired product and can then be clipped onto the lipped horizontal rail (DIN 43880)

Delivery comprises

Item	Qty	Description
1	1	Adaptor, Al extrusion, length 160 mm
1	1	Fixing material

Order Information

Description	Part no.
Adaptor for horizontal rail mounting	11000-002

PCB accessories

PCB handle C

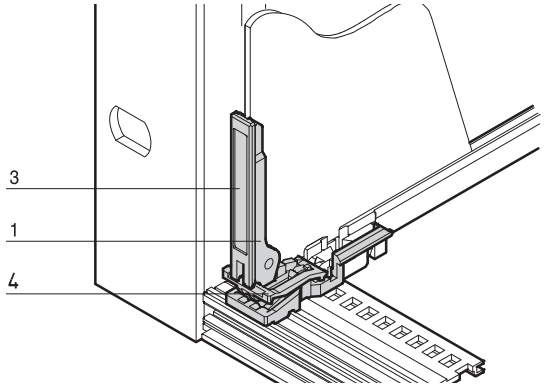

BPA45909

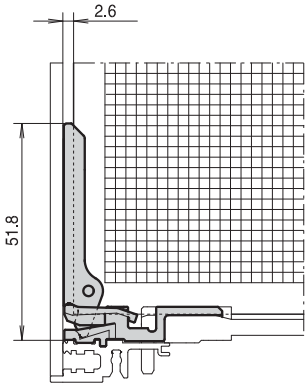

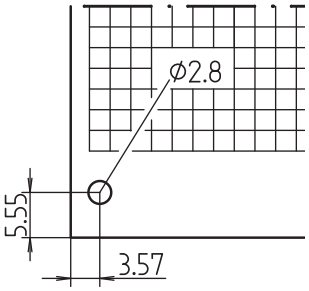

BPA45910 BPA45910

- For europacPRO, multipacPRO, ratiopacPRO, propacPRO and compacPRO
- Mounts behind front panel
- Insertion and extraction
- Can be labelled
- In accordance with IEC 60297-3-102

Order Information

Item	Description	Material	Colour	Qty/PU	Part no.
1	PCB handle C	PBT, UL 94 V-0	red	10	**24560-378**
3	Identification strip (1 sheet = 438 pieces)	Polyesterfilm, self-adhesive	white/ matt	1	**60817-228**

Note

- Minimum spacing of guide rail 3 HP
- for board thickness 1.6 mm
- Please order PCB retainer C separately

PCB retainer C

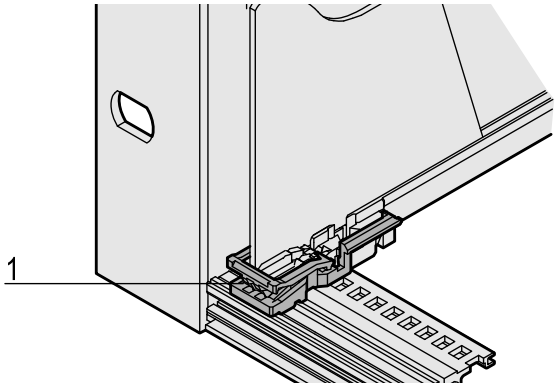

06002057

- For europacPRO, multipacPRO, ratiopacPRO, propacPRO and compacPRO
- Can also be used without PCB handle
- Application on top and bottom horizontal rail with "accessory" type guide rail

Order Information

Item	Description	Material	Colour	Qty/PU	Part no.
1	PCB retainer C	PBT, UL 94 V-0	red	10	**24560-377**

Note

- Minimum spacing of guide rail 3 HP
- Cannot be used with propac, compac, inpac cases

PCB accessories

PCB handle B1

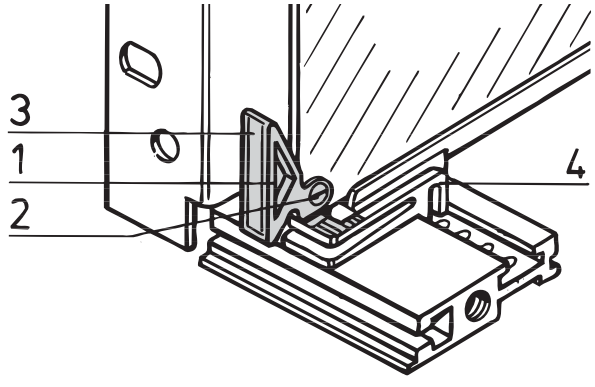

B42729

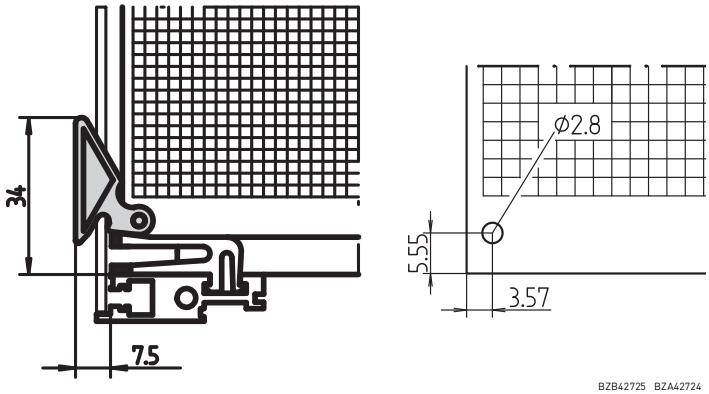

BZB42725 BZA42724

- For bolting or riveting to 1.6 mm PCBs (top and bottom)
- Extraction function only
- Can be labelled

Order Information

Item	Description	Material	Colour	Qty/PU	Part no.
1	PCB handle, bolt-on	PBT, UL 94 V-0	red	1 piece (SPQ 10)	**60817-067**
1a	PCB handle for rivet fitting	PBT, UL 94 V-0	red	1 piece (SPQ 10)	**60817-072**
2	Countersunk screw	St, nickel-plated, DIN 965	–	100	**21100-515**
2a	Tubular rivet	Brass, DIN 7340	–	100	**21100-076**
3	Indentification strip	Polyester film, self-adhesive	white	100	**21100-569**

SPQ (standard pack quantity): Part number includes 1 piece, but delivery is exclusively made in standard pack quantity: Please order at least 10 pieces PCB handles or a multiple

Note

- Can be used with PCB retainer B1, B2, see page 7.104

PCB handle B2

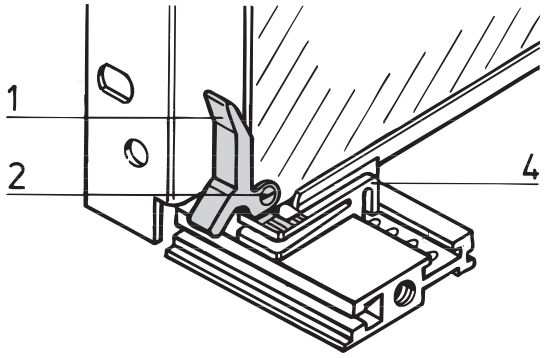

BZA46427

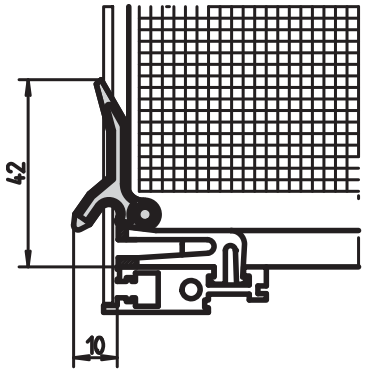

BZB42726

- For bolting to PCBs (1.6 mm); can only be used on bottom horizontal rail
- Extraction function only
- Can be labelled

Order Information

Item	Description	Material	Colour	Qty/PU	Part no.
1	PCB handle	PBT, UL 94 V-0	red	1 piece (SPQ 10)	**60817-055**
2	Slotted cheesehead screw, M2.5 × 6	St, nickel-plated	–	100	**21100-146**

SPQ (standard pack quantity): Part number includes 1 piece, but delivery is exclusively made in standard pack quantity: Please order at least 10 pieces printed circuit board handles or a multiple

Note

- Can be used with PCB retainer B1, B2, see page 7.104

PCB accessories

PCB retainer B1, B2

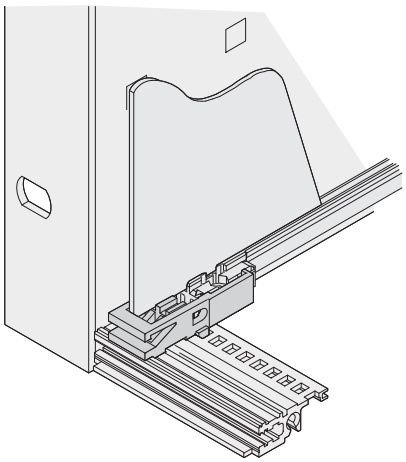

06109050

- For fixing PCB
- Can also be used without PCB handle
- Application on top and bottom horizontal rail
- Suitable for PCB handles B1 and B2

Order Information

Description	Material	Colour	Qty/PU	Part no.
PCB retainer B1, B2	PPO, UL 94 V-0	red	10	**24560-381**

Note

- Groove width 2 mm

PCB handle, snap-on

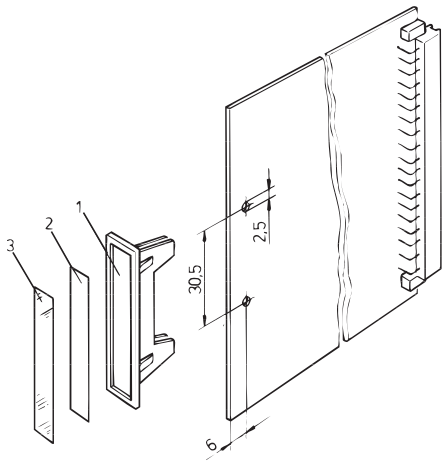

A3261

- For board thickness 1.6 mm

Order Information

Item	Description	Material	Colour	Qty	Part no.
1	PCB handle, can be locked	PPE, UL 94 V-1	grey	1 piece (SPQ 10)	**60800-039**
1	PCB handle, can be locked	PPE, UL 94 V-1	red	1 piece (SPQ 10)	**60800-045**
Transparent strips Item 3, 50 × 5 × 0.3 mm, PU 100 pieces					**69000-007**

SPQ (standard pack quantity): Part number includes 1 piece, but delivery is exclusively made in standard pack quantity: Please order at least 10 pieces PCB handles or a multiple

PCB handle, can be bolted/riveted

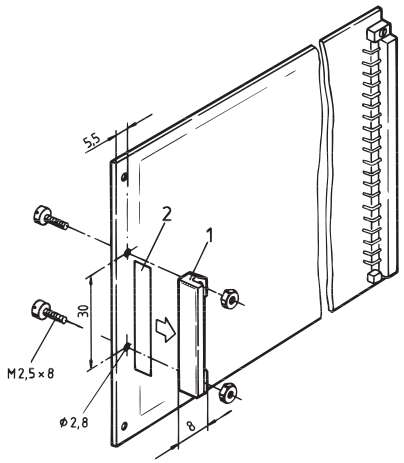

A4-1302

- For board thickness 1.6 mm

Order Information

Item	Description	Material	Colour	Qty	Part no.
1	PCB handle, can be bolted/riveted	PC	yellow	1 piece (SPQ 10)	**60817-050**
2	PCB handle, can be bolted/riveted	PC	red	1 piece (SPQ 10)	**60817-051**
1	PCB handle, can be bolted/riveted	PC	green	1 piece (SPQ 10)	**60817-052**
Identification strip Item 2, carton, white, 37.5 × 7 × 0.15 mm, 1 sheet = 105 pieces					**69000-969**
Pozidrive panhead screw M2.5 × 8, St, nickel-plated, PU 100 pieces					**21101-069**
Hexagonal nut A 2.5, nickel-plated, PU 100 pieces					**21100-144**
Tubular rivet, form B (roundhead) B 2.5 x 0.25 x 5, St/brass, raw, DIN 7340, PU 100 pieces					**21100-459**

SPQ (standard pack quantity): Part number includes 1 piece, but delivery is exclusively made in standard pack quantity: Please order at least 10 pieces PCB handles or a multiple

PCB accessories

PCB pocket

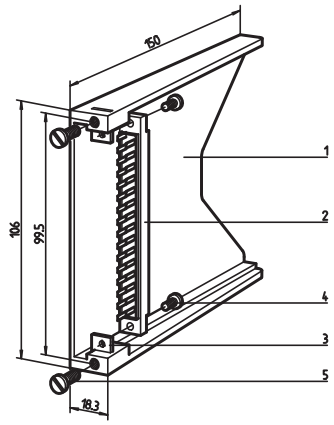

LKA42605

Retention bracket (DIN 41612)

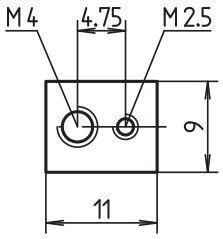

LKA42606

- Accepts PCBs in euroboard format, 100 × 160 mm
- For female connectors to EN 60603 (DIN 41612)

Delivery comprises (kit)

Item	Qty	Description
1	1	PCB pocket, PBT (P), grey, UL 94 V-0
3	2	Retention bracket, St, 2 mm, nickel-plated
4	2	Cheesehead screw M2.5 × 6, St, nickel-plated
5	2	Cheesehead screw M4 × 12, St, nickel-plated

Order Information

Item	Description	Material	Colour	Qty/PU	Part no.
1	PCB pocket	PBT (P)	grey	1	**20800-032**

Note

- Connector (item 2) see page 11.2

PCB strengthening (9 U)

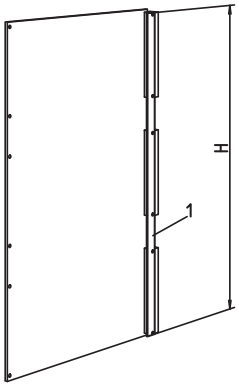

LKA42609

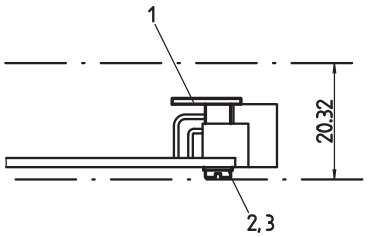

LKA42593

- Protects large PCBs from bending
- Creates an additional crossbar (corresponding to IEEE recommendations, P 896, Nubus, Multibus® II etc.) that links all connectors mecanically
- Fixing points match connectors to EN 60603 (DIN 41612), types B, R, C and D

Delivery comprises (kit)

Item	Qty	Description
1	1	PCB strengthening, Al extrusion, anodised, cut edges plain; separator, stainless steel, riveted on
2	6	Cheesehead screw M 2.5 × 12, St, nickel-plated
3	6	Washer 2.6, St, nickel-plated

Order Information

Description	Height H mm	Part no.
For 9 U PCBs	361.6	**20809-441**

PCB covers

11092008

- Covers to protect solder side of board, see page 7.62

PCB accessories

Individual components — PCB support for static trapeziform handle

Fixing parts for extractor handles in key form 2

Drill hole dimensions on PCB

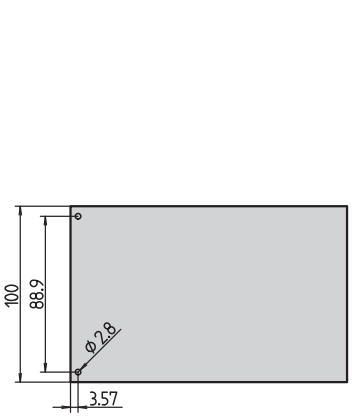

3 HE

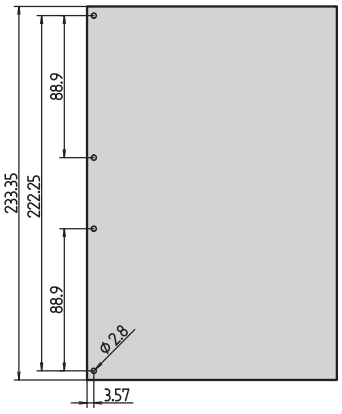

6 HE

bga43076 bga43077

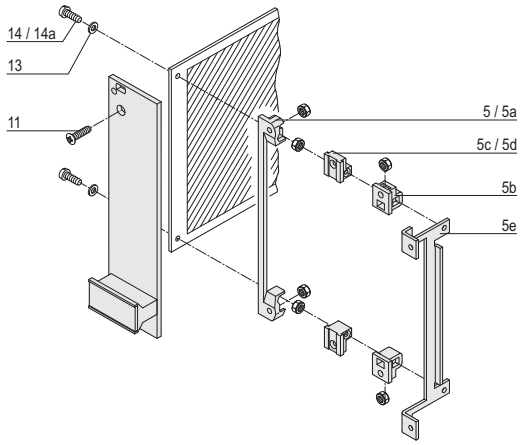

bza46430

Fixing parts	Item		Required quantity 3 U	Required quantity 6 U	Qty/PU	Part no.
PCB bracket 4 clearance holes for front panel/PCB fixing, 4 recesses for hexagon nuts; PBT, UL 94 V-0, red	5	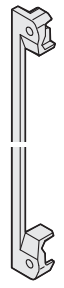 AZA45177	1	2	1 piece (SPQ 10)[1]	60807-011
PCB bracket 4 threads M2.5 for front panel/PCB fixing, PBT, UL 94 V-0, grey, 1 piece	5a		1	2	1 piece (SPQ 10)[1]	60807-211
PCB bracket Clearance hole for front panel fixing, with recess for hexagon nut, drill hole for self-tapping screw for PCB fixing, PBT, UL 94 V-0, grey, 1 piece	5b	AZA45177	2	4	1 piece (SPQ 10)[1]	60807-183
PCB bracket 2 threads M2.5 for front panel/PCB fixing, die-cast zinc, 1 piece	5c	06707050	2	4	1 piece (SPQ 10)[1]	60807-181
PCB bracket Thread M2.5 for front panel fixing, clearance hole for PCB fixing, die-cast zinc, 1 piece	5d	06707050	2	4	1 piece (SPQ 10)[1]	60807-203
PCB bracket 4 threads M2.5 for fixing front panel/PCB for recessed PCB mounting (20 mm), mounting depth 192.24 mm, St, zinc-plated; not for europacPRO, multipacPRO, ratiopacPRO, propacPRO or compacPRO, 1 piece	5e	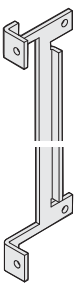 AZA46586	1	2	1 piece (SPQ 10)[1]	30808-871

1) SPQ (standard pack quantity): Part number includes 1 piece, but delivery is exclusively made in standard pack quantity (SPQ); please order at least the SPQ quantity or a multiple

Assembly parts

Assembly parts

- Quick-release fasteners
- Sleeves
- Screws
- Cage nuts
- Tools

Quick-release fasteners

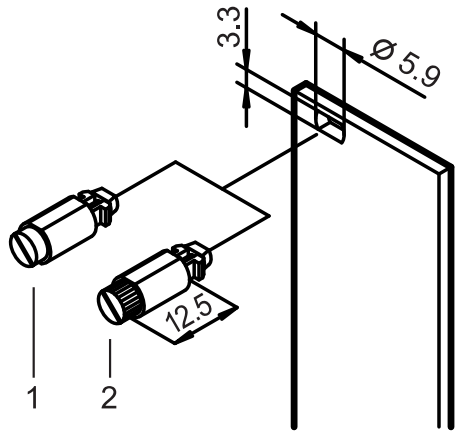

06702062

- Vibration and shock proof
- 1/4 rotary lock with defined stop
- Detection of fastening position through slot position

Delivery comprises

Qty	Description
1	Locking pin, St, locking, Zn die-cast
1	Press-in sleeve, POM

Order Information

Item	Description	Qty/PU	Part no.
1	With slotted head, grey	100	**21101-847**
1	With slotted head, black	100	**21101-848**
2	With knurled and slotted head, grey	100	**21101-849**
2	With knurled and slotted head, black	100	**21101-850**

Note

Quick-release fasteners: mounting without threaded insert

Sleeves

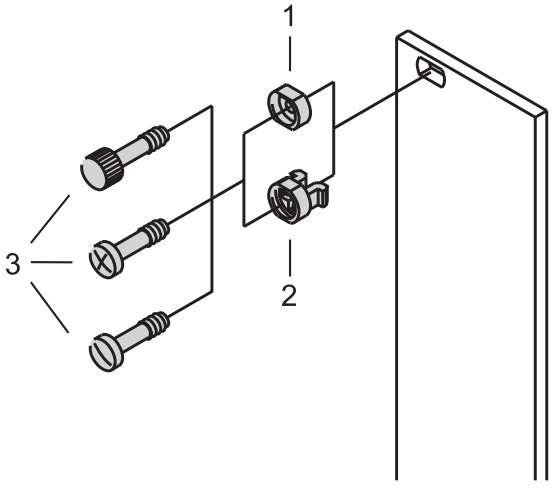

06702061

Order Information

Item	Description	Application	Qty/PU pieces	Part no.
2	Plastic sleeve, PA, grey	for unshielded front panels	100	**21100-464**
2	Plastic sleeve, PA, black	for unshielded front panels	100	**21100-591**
1	Metal sleeve, brass, nickel-plated	for shielded front panels	10	**21100-659**
1	Metal sleeve, brass, nickel-plated	for shielded front panels	100	**21100-660**
1	Metal sleeve, brass, black	for shielded front panels	10	**21100-885**
1	Metal sleeves, stainless steel	for shielded front panels	10	**21100-661**
1	Metal sleeves, stainless steel	for shielded front panels	100	**21100-662**
Accessories				
Pozidrive/slotted collar screw M2.5 × 11, St, nickel-plated, PU 100 pieces				**21100-748**
Pozidrive/slotted collar screw M2.5 x 12.3, St, nickel-plated, PU 100 pieces				**21101-101**

Note

- Metal sleeves must be pressed-in into front panels
- Sleeve does not fit 2 HP wide front panels

Assembly parts

Collar screws

	Description	Material	Dimension	Qty/PU	Part no.
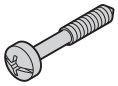 AZA46586	Pozidrive/slotted collar screw	St, nickel-plated	M2.5 x 11	100	**21100-748**
		St, zinc-plated, black	M2.5 x 11	100	**21100-749**
		Stainless steel, with slot	M2.5 x 11	100	**21101-323**
		St, nickel-plated	M2.5 x 12.3	100	**21101-101**
		St, zinc-plated, black	M2.5 x 12.3	100	**21101-102**
		Stainless steel	M2.5 x 12.3	100	**21101-906**
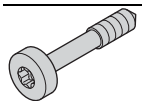 AZA45941	Torx collar screw	St, nickel-plated	M2.5 x 12.3	100	**21101-782**
		St, zinc-plated, black	M2.5 x 12.3	100	**21101-783**
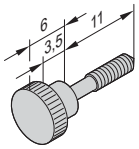 06709050	Collar screw with knurled head	Brass, nickel-plated	M2.5 x 11	50	**21100-268**
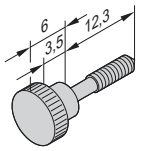 06709051		Brass, nickel-plated	M2.5 x 12.3	100	**21101-749**
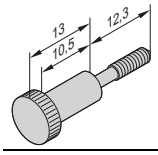 06709052		Brass, nickel-plated	M2.5 x 12.3	100	**21101-909**
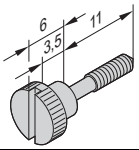 06709053	Slotted collar screw with knurled head	Brass, nickel-plated	M2.5 x 11	100	**21101-106**

Assembly parts

Countersunk screws

	Description	Material	Dimension	Qty/PU	Part no.
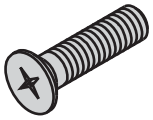 aza45182	Pozidrive countersunk screw	St, nickel-plated	M2.5 x 6	100	**21100-515**
		St, nickel-plated	M2.5 x 12	100	**21100-507**
AZA46585	Torx countersunk screw	St, zinc-plated	M4 x 5	100	**24560-139**
		St, zinc-plated	M4 x 14	100	**24560-145**
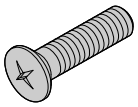 06702056	Raised Pozidrive countersunk screw	St, nickel-plated	M2.5 x 8	100	**21100-429**
		St, nickel-plated	M2.5 x 10	100	**21100-500**
		St, zinc-plated, black	M2.5 x 10	100	**21100-649**
		St, nickel-plated	M3 x 8	100	**21100-542**
		St, zinc-plated, black	M3 x 8	100	**21100-648**
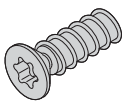 06707057	Torx countersunk screw, self-tapping	St, zinc-plated	2.5 x 7.7	100	**24560-158**

Screws for plug-in units

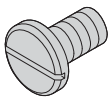
06706053

Order Information

Description	Qty/PU	Part no.
Slotted flathead screw, 6-32 UNC x 6	100	**21100-712**

Assembly parts

Panhead screws

	Description	Material	Dimension	Qty/PU	Part no.
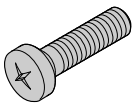 06702057	Pozidrive panhead screw	St, nickel-plated	M2.5 x 5	100	**21101-314**
		St, nickel-plated	M2.5 x 6	100	**21101-219**
		St, nickel-plated	M2.5 x 8	100	**21101-069**
		St, nickel-plated	M2.5 x 10	100	**21101-220**
		St, nickel-plated	M2.5 x 12	100	**21101-221**
		St, nickel-plated	M2.5 x 16	100	**21101-222**
		St, zinc-plated	M5 x 12	100	**21100-788**
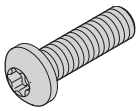 AZA45940	Torx panhead screw	St, zinc-plated	M2.5 x 6	100	**24560-159**
		St, nickel-plated	M2.5 x 7	100	**24560-147**
		St, nickel-plated	M2.5 x 10	100	**24560-148**
		St, nickel-plated	M2.5 x 12	100	**24560-161**
		St, nickel-plated	M2.5 x 14	100	**24560-162**
		St, zinc-plated	M4 x 6	100	**24560-135**
		St, zinc-plated	M4 x 6	100	**24560-151**
		St, zinc-plated	M4 x 10	100	**24560-155**
		St, zinc-plated	M4 x 14	100	**24560-130**
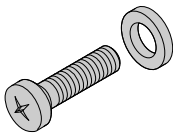 06702051	Screw + securing washer (PA)	St, nickel-plated	M2.5 x 12	100	**21100-777**
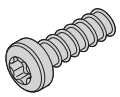 06707058	Torx panhead screw, self-tapping	St, zinc-plated, black	2.5 x 7.3	100	**24560-157**
		St, zinc-plated	2.5 x 9.3	100	**24560-141**

Assembly parts

Grub screws

	Description	Material	Dimension	Qty/PU	Part no.
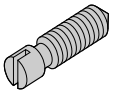 06702053	Grub screw	Stainless steel	M2.5 x 9	100	**21101-359**
		St, nickel-plated	M2.5 x 8	100	**21100-276**
		St, zinc-plated	M3.0 x 8	100	**21100-646**

Washers

	Description	Material	Dimension	Qty/PU	Part no.
AZA45178	Washer	Plastic, PA	2.7 x 5 x 1	100	**21101-121**
		Plastic, PA	2.8 x 6,3 x 2	100	**21101-964**
		St, nickel-plated	A2.7 DIN 125	100	**21100-721**
AZA45180	Shakeproof washer	St, nickel-plated	A 2.6	100	**21100-142**

Nuts

	Description	Material	Dimension	Qty/PU	Part no.
AZA43239	Hexagon nut	St, nickel-plated	M2.5	100	**21100-144**
06707050	Square nut	St, nickel-plated	M2.5	100	**21100-359**
AZA45921	Square nut	St, zinc-plated	M4	100	**24560-140**

Tubular rivet

	Description	Material	Dimension	Qty/PU	Part no.
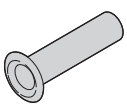 06706050	Tubular rivet, form B (roundhead)	St/brass, raw	B 2.5 x 0.25 x 5	100	**21100-459**

Assembly parts

Assembly tools

Order Information

	Description	Application	Dimension	Qty/PU	Part no.
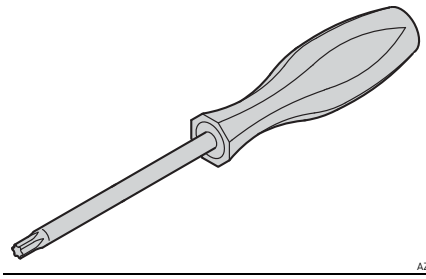 AZA45925	Torx screwdriver	For M2.5 screw	T8	1	**64560-026**
		For M4 screw	T20	1	**64560-027**
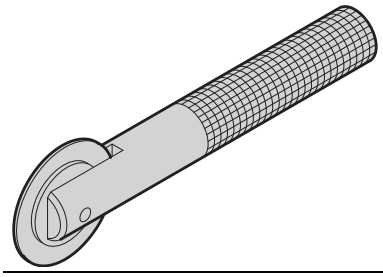 aza45938	Assembly tool	Exclusively to fix stainless steel EMC gaskets in horizontal rails	–	1	**24560-271**
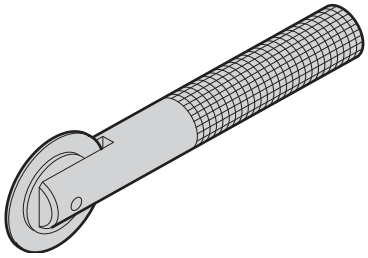 aza45937	Assembly tool	To fix stainless steel EMC gaskets on front panels with lateral slot	–	1	**24560-270**

Note

- Assembly tool to insert keying/coding pegs in guide rails is available on request

Assembly parts

Measuring tape

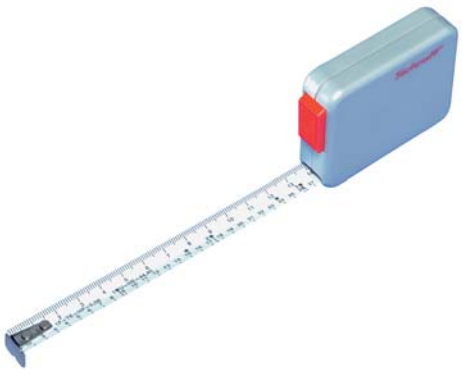

32506001

- Measuring tape with cm, U-, HP-division (length 2 m)
- Plastic housing, metal measuring tape with automatic collection

Order Information

Description	Qty/PU	Part no.
Measuring tape	1	**89009-001**

Content

Cabinets 1

Wall mounted cases 2

Accessories for cabinets and wall mounted cases . 3

Climate control . 4

Electronics cases 5

Subracks/ 19" chassis 6

Front panels, plug-in units . . . 7

Systems 8

Power supply units 9

Backplanes . . . 10

Connectors, front panel component system 11

Appendix 12

Systems – Overview

AdvancedTCA

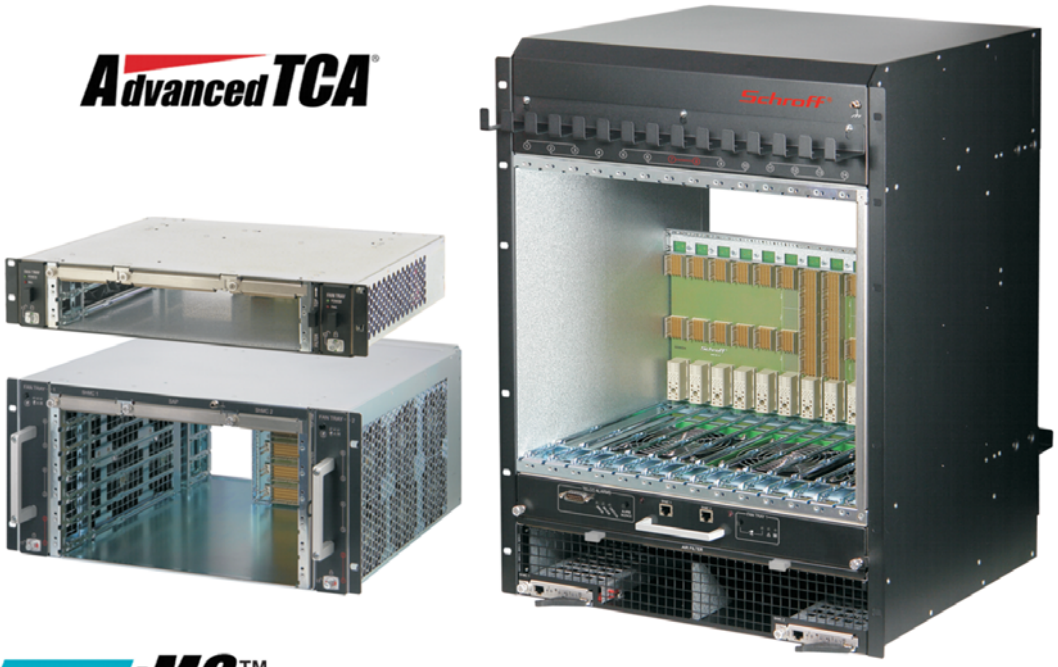

AdvancedMC™

PICMG®

Open Modular Computing Specifications

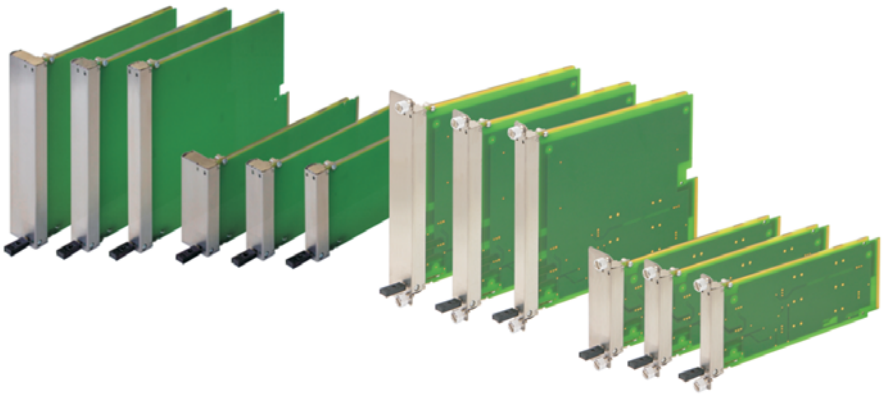

µTCA™

36106007 (12711001 12708009 12710001 12808017 12911003 12911006 12912005)

Systems – Overview

Overview 8.0

AdvancedTCA systems 8.2

AdvancedMC carriers 8.26

MicroTCA 8.36

AdvancedMC modules 8.56

CompactPCI 8.68

VME-, VME64x-, VXS-, VPX-bus .. 8.88

System accessories
Backplanes/ bridges 10.0
Guide rails 6.38
Plug-in units with extractor handle 7.18
Air baffles 6.61
Mezzanine front panels 7.12
Fan Control Modules (FCM) . 8.106
Chassis monitoring modules (CMM) 8.107
19" power supplies 9.0
Equipment cables 3.38
Drive unit modules 8.108

CompactPCI

CompactPCI Serial, CompactPCI PlusIO, PSB

PICMG®
Open Modular Computing Specifications

VME, VME64x, VXS, VPX

MEMBER VITA
Open Standards, Open Markets

36106008 (12310002 12312001 123006003 10006002 10002010 100112001 30402059)

Content

Systems – AdvancedTCA

Cabinets 1

Wall mounted cases 2

Accessories for cabinets and wall mounted cases . 3

Climate control . 4

Electronics cases 5

Subracks/ 19" chassis 6

Front panels, plug-in units . . . 7

Systems 8

Power supply units 9

Backplanes . . . 10

Connectors, front panel component system 11

Appendix 12

12707010

Everything a system needs.
Schroff's AdvancedTCA systems make the development of new, forward-looking tele-communications installations with high data-processing rates as simple for you as possible.

We offer everything on the basis of the AdvancedTCA specification that you have come to expect from a Schroff complete system

Excellent mechanics, optimised cooling, reliable pow8er supply, efficient data distribution and secure system management.

But that is not all:
As a matter of course, our complete systems are also available in shock and vibration-resistant versions with UL certification.

With Schroff, AdvancedTCA means matured products and wide ranges of options:

- Dimensions from 2 to 14 U
- 2 to 16 slot installations
- Cooling concepts (push, pull, push-pull)
- Backplane topologies (dual star, full mesh)
- Shelf manager based on Pigeon Point technology

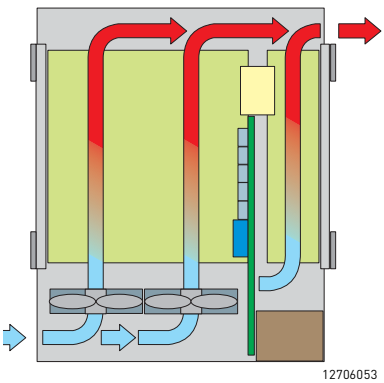

12706053

Push cooling

The fans are situated near the air inlet and push the air through the system.

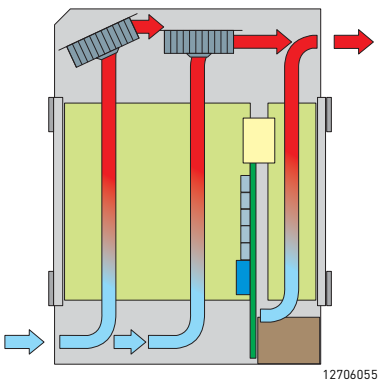

12706055

Pull cooling

The fans are situated near the air outlet and suck the air through the system.

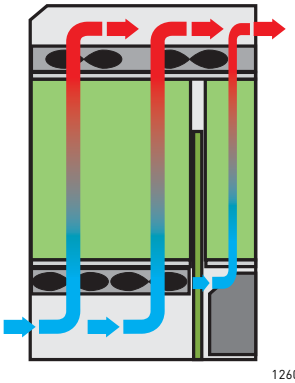

12606007

Push-Pull

The fans are situated below and above the board cage for maximum airflow and optimal redundancy.

Systems – AdvancedTCA

Overview 8.2

Systems and components available world-wide

- Very wide product range with regard to dimensions, number of slots, cooling designs, backplane topologies and shelf managers; all completely assembled and tested
- NEBS ready, UL recognized
- For mounting in ETSI, 19" or 23" cabinets
- Cooling up to 400 W per board

PICMG® Open Modular Computing Specifications

12705006 12705005

AdvancedTCA systems

- 2 ... 14 U; 2 ... 16 slot
- Backplane with dual star, full mesh topology, 15-fold connected fabric interface with hub/hub or node/node configuration; bussed or radial IPMB
- Push, pull or push-pull cooling
- Shelf manager based on Pigeon Point technology

12708006 127070173

AdvancedTCA accessories

- Front panels and handles
- Shelf manager based on Pigeon Point technology
- Backplane

30407004

ServicePLUS from page 8.112

e.g. individual configuration and assembly
e.g. modifications (integration)
e.g. downloads (CAD drawings, user manuals, test reports)
e.g. custom solutions

www.schroff.biz/ServicePLUS

Systems
5 U, 6 slot 8.5
12 U, 14 slot 8.5
13 U, 14 slot 8.6
3 U, 2 slot, 84 HP. 8.8
14 U, 14 slot, next generation 8.8
14 U, 14 slot, ECO, 84 HP 8.9

Accessories 8.10

Field replaceable units (FRUs) 8.19

ServicePLUS ... 8.112

AdvancedTCA 300/40 series, 6 slot, DC

12710001

Front view

12708006

Accessories: optional shelf manager

ServicePLUS see page 8.112

PICMG Open Modular Computing Specifications

- 40 G backplane with 6 slots, triple replicated mesh topology; 2 versions:
  - Bussed IPMB
  - Radial IPMB
- 300 W cooling capacity per slot at an ambient temperature of 55 °C
- -48 V_{DC}/ -60 V_{DC} input voltage, two redundant power entry modules (PEM)
- Two hot swap fan trays, airflow from right to left (push/pull cooling), air filter exchangeable from front
- 2 shelf managers and 1 SAP (shelf alarm panel) can be installed
- UL recognized, E229721 type T11
- Conforms to AdvancedTCA Standard PICMG 3.0 rev.3.0

Delivery comprises (completely assembled, wired and tested)

Item	Qty	Description
1	1	Shielded 19" subrack system, St, zinc-plated, 5 U, 84 HP, 464 mm deep, front with overlays, black, RAL 9005, with 6 horizontal slots for 8 U, 6 HP, 280 mm depth AdvancedTCA boards; 6 horizontal slots at rear, 8 U, 6 HP, 70 mm deep
2	1	Backplane, 6 slot, triple replicated mesh, 2 hub slots, 4 node slots
3	2	Redundant -48 V_{DC}/-60 V_{DC} power entry module (PEM) with circuit breaker
4	2	Hot-swap fan tray with 6 fans each for cooling the boards (> 350 W/ board); Filter mat
5	2	Front panel; Space to accommodate shelf manager
6	1	Front panel; Space for fitting shelf alarm panel (SAP)

Order Information

AdvancedTCA system	Backplane type	Part no.
AdvancedTCA 300/40 series, 6 slot, DC	Triple replicated mesh, 40 Gbps, bussed IPMB	11596-160
	Triple replicated mesh, 40 Gbps, radial IPMB	11596-161
Accessories		
Shelf manager (bussed) 1 piece - page 8.19		**21596-300**
Shelf manager (radial) 1 piece - page 8.19		**21596-301**
Cable RJ 45 Cat 5 plug - D-Sub plug, 9-pin, length 2 m, 1 piece; page 8.19		**23204-187**
Front panels and handles		**Page** 8.11
AdvancedMC carriers		**Page 8.26**
Replacement parts (FRUs)		
Power entry module (PEM) - page 8.19		21990-058
Fuse 30 A/80 V for power entry module, PU 10 pieces		21191-207
Shelf alarm panel (SAP)		**21596-077**
Fan tray - page 8.20		21990-057
Air filter - page 8.22		21990-059

Note

- Modified systems available on request

Systems – AdvancedTCA

12 U, 14 slot, with PEM

12705005

Front view

ServicePLUS see page 8.112

- In accordance with AdvancedTCA specification PICMG 3.0 rev. 2.0
- 14 slot backplane with dual star or full mesh topology
- Two redundant power entry modules (PEM) for supply voltage -48 V_{DC}/-60 V_{DC}
- Redundant hot-swap fan trays for up to 250 W cooling per slot, airflow from bottom front to top rear; air filter exchangeable from front
- Shelf alarm panel (SAP)
- Prepared for two Schroff shelf managers with Pigeon Point ShMM 500 for bussed or radial IPMB topology

Delivery comprises (completely assembled, wired and tested)

Item	Qty	Description
1	1	Shielded 19" subrack system, St, 12 U, 84 HP, 383 mm deep; powder-coated, black, RAL 9005; with 14 horizontal slots for 8 U, 6 HP, 280 mm deep AdvancedTCA boards, rear 8 U, 6 HP, 70 mm deep; cable channel at front and rear
2	1	Backplane, 14 slot
3	2	Redundant -48 V_{DC}/-60 V_{DC} power entry module (PEM), plugged in on the rear, with 4 pairs of lines each per input (8 fuses, 30 A)
4	1	Fan unit at bottom; 3 redundant fan trays with 330 m^3/h (195 cfm) each, with 2 fans each to cool the front and rear I/O boards Filter mat
5	1	Shelf alarm panel (SAP)
6	1	Cover for shelf manager slot (enclosed loose)
7	2	Mounting bracket, for assembly in 19" cabinets

Order Information

AdvancedTCA system	Backplane type	Part no.
12 U, 14 slot, with PEM	Dual star, 25 Gbps, bussed IPMB	**11596-300**
	Full mesh, 25 Gbps, radial IPMB	**11596-303**

Accessories	
Shelf manager (bussed) 1 piece - page 8.19	**21596-300**
Shelf manager (radial) 1 piece - page 8.19	**21596-301**
Cable RJ 45 Cat 5 plug - D-Sub plug, 9-pin, length 2 m, 1 piece; page 8.19	**23204-187**
Adaptor 12 U RAL 9005, from 19" to ETSI, PU 1 kit	21596-273
Adaptor 12 U RAL 9005, from 19" to 23", PU 1 kit	21596-274
Front panels and handles	**Page** 8.11
AdvancedMC carriers	**Page 8.26**

Replacement parts (FRUs)	
Chassis Data Module - page 8.25	21596-023
Power entry module (PEM) - page 8.19	21596-003
Fuse 30 A/80 V for power entry module, PU 10 pieces	21191-207
Shelf alarm panel (SAP) - page 8.23	21596-022
Fan tray - page 8.20	21596-236
Air filter - page 8.22	21596-002

Note

- Modified systems available on request

AdvancedTCA 300/40 series, 14 slot, DC

12707005

Front view

ServicePLUS see page 8.112

- 40 G backplane with 14 slots, dual star topology; 2 versions:
- 300 W cooling capacity per slot at an ambient temperature of 55 °C
- -48 V_{DC}/ -60 V_{DC} input voltage, two redundant power entry modules (PEM)
- Redundant hot-swap fan trays, airflow from bottom front to top rear; air filter exchangeable from front
- Shelf alarm panel (SAP) and shelf alarm display (SAD)
- Prepared for two Schroff shelf managers with Pigeon Point ShMM 500 for bussed IPMB
- UL recognized, E229721 type T07 (registered)
- Conforms to AdvancedTCA standard PICMG 3.0 rev. 3.0

Delivery comprises (completely assembled, wired and tested)

Item	Qty	Description
1	1	Shielded 19" subrack system, St, 13 U, 84 HP, 383 mm deep; powder-coated, black, RAL 9005; front 14 slot, 8 U, vertical board mounting, boards 6 HP, 280 mm deep, rear 6 HP, 70 mm deep; cable channel at front and rear
2	1	Backplane, 14 slot
3	2	Redundant power entry module (PEM), -48 V_{DC}/-60 V_{DC}, plugged in at rear, with 4 pairs of lines each per input (8 fuses, 30 A)
4	1	Fan unit at top; 3 redundant fan trays with 400 m^3/h (230 cfm) each, with 2 fans each to cool the front and rear I/O boards; filter mat
5	1	Shelf alarm panel (SAP)
6	1	Shelf alarm display (SAD)
7	2	Mounting bracket, for assembly in 19" cabinets

Order Information

AdvancedTCA system	Backplane type	Part no.
AdvancedTCA 300/40 series, 14 slot, DC	Dual star, 40 Gbps, bussed IPMB	11990-600
	Dual star, 40 Gbps, bussed IPMB	11990-601
	Full mesh, 25 Gbps, radial IPMB	11990-603
Accessories		
Shelf manager (bussed) 1 piece - page 8.19		**21596-300**
Shelf manager (radial) 1 piece - page 8.19		**21596-301**
Cable RJ 45 Cat 5 plug - D-Sub plug, 9-pin, length 2 m, 1 piece; page 8.19		**23204-187**
Mounting bracket 13 U RAL 9005, from 19" to 23", PU 1 kit		21596-278
Front panels and handles		**Page** 8.11
AdvancedMC carriers		**Page 8.26**
Replacement parts (FRUs)		
Chassis Data Module - page 8.25		21596-023
Power entry module (PEM) - page 8.20		21596-020
Fuse 30 A/80 V for power entry module, PU 10 pieces		21191-207
Shelf alarm panel (SAP) - page 8.23		21596-140
Shelf alarm display (SAD) - page 8.24		21596-026
Fan tray - page 8.21		21990-184
Air filter - page 8.22		21596-138

Note

- Modified systems available on request

Systems – AdvancedTCA

AdvancedTCA 450/40 series, 2 slot, DC, cooling from front to rear

12715001

Front view

12715002

Rear view

12715003

Power connection

- UL recognized, E229721 type T15
- Conforms to AdvancedTCA Standard PICMG 3.0 rev. 3.0
- 40 G backplane with 2 slots, 15x connected fabric interface
- 450 W cooling capacity per slot at an ambient temperature of 55°C
- Input voltage -48 V_{DC}/-60 V_{DC}, two redundant power connections with fuse and switch
- Two hot-swap fan modules on rear of case, airflow from front to rear; air filter replaceable from front
- Prepared for one shelf alarm panel and two Schroff shelf managers with Pigeon Point ShMM 500 for bussed or radial IPMB
- FRU file to support the shelf manager with Pigeon Point ShMM 700 are available for download

NEW

Delivery includes (completely assembled, cabled and tested)

Item	Qty	Description
1	1	Shielded 19" subrack, St, 3 U, 84 HP, 464 mm deep, powder coated, black, RAL 9005; with 2 horizontal slots at front for 8 U, 6 HP, 280 mm deep boards and 2 horizontal slots at rear, 8 U, 6 HP, 70 mm deep
2	1	Backplane, 2 slots
3	2	Redundant power connection, -48 V DC/-60 V DC, at the rear, with 1 pair of power terminals (1 fuse, 30 A) each
4	2	Redundant fan unit, rear, with 2x2 fans each
5	1	Air filter replaceable from front
6	2	Mounting bracket, for installation in 19" cabinets

Order Information

Cooling capacity	Airflow	Transmission rate	Voltage	Number of slots	Height U	Description	Part no.
450 W/slot	from front to rear	40 Gbps	- 48/-60 V_{DC}	2	3	15x connected fabric interface with node/ node configuration, bussed IPMB	**11990-800**
450 W/slot	from front to rear	40 Gbps	- 48/-60 V_{DC}	2	3	15x connected fabric interface with hub/hub configuration, bussed IPMB	11990-801
450 W/slot	from front to rear	40 Gbps	- 48/-60 V_{DC}	2	3	15x connected fabric interface with node/ node configuration, radial IPMB	11990-802
450 W/slot	from front to rear	40 Gbps	- 48/-60 V_{DC}	2	3	15x connected fabric interface with hub/hub configuration, radial IPMB	11990-803
Accessories							
Shelf manager, ACB-V, bussed 1 piece							**21596-300**
Shelf manager ACB-V, radial 1 piece							**21596-301**
Shelf manager, ACB-VI, bussed 1 piece							**21990-404**
Shelf manager ACB-VI, radial 1 piece							**21990-405**
Shelf alarm panel 1 piece							**21596-077**
Front panels and handles							**Seite 8.11**
AdvancedMC carriers							**Seite 8.26**
Replacement parts (FRUs)							
Fan tray - page 8.21							21990-526
Air filter - page 8.22							21990-527

Note

- Modified systems available on request

AdvancedTCA 450/40 series chassis, 14 slot, DC

12711001

Front view

12708006

Accessories: optional shelf manager

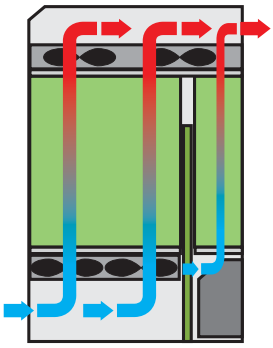

12712050

Push-pull cooling

ServicePLUS see page 8.112

PICMG Open Modular Computing Specifications

- 40 G backplane with 14 slots, dual star topology, 2 versions: bussed and radial IPMB
- 450 W cooling capacity per slot at an ambient temperature of 55 °C
- -48 V_{DC}/-60 V_{DC} input voltage, two redundant power entry modules (PEM)
- 2 redundant hot-swap fan trays in push-pull configuration, airflow from bottom front to top rear; air filter exchangeable from front
- Prepared for 2 x Schroff shelf managers with Pigeon Point ShMM 500 for bussed or radial IPMB topology
- UL recognized, E229721 type T08
- Conforms to AdvancedTCA standard PICMG 3.0 Rev.3.0

Delivery comprises (completely assembled, wired and tested)

Item	Qty	Description
1	1	Shielded 19" plug-in units, St, 14 U, 84 HP, 383 mm deep, powder coated, black, RAL 9005; with 14 vertical slots at front for 8 U, 6 HP, 280 mm deep AdvancedTCA boards; 14 vertical slots at rear, 8 U, 6 HP, 70 mm deep; cable channel on front and rear
2	1	Backplane, 14 slots
3	2	Redundant power entry module (PEM) -40 ... -72 V_{DC}, inserted at rear, with 2 pairs of lines per input
4	1	Fan tray at top with 6 fans, each 565 m^3/h (336 cfm)
5	1	Fan tray at bottom with 6 fans, each 565 m^3/h (336 cfm)
6	1	Telco alarm panel integrated in the bottom fan drawer
7	1	Air filter, can be changed from the front
8	2	Mounting bracket, for assembly in 19" cabinets

Order Information

AdvancedTCA system	Backplane type	Part no.
AdvancedTCA 450/40 series chassis, 14 slot, DC	Dual star, 40 Gbps, bussed IPMB	**11990-100**
	Dual star, 40 Gbps, radial IPMB	11990-101
Accessories		
Shelf manager (bussed) 1 piece - page 8.19		**21596-300**
Shelf manager (radial) 1 piece - page 8.19		**21596-301**
Cable RJ 45 Cat 5 plug - D-Sub plug, 9-pin, length 2 m, 1 piece; page 8.19		**23204-187**
Front panels and handles		**Page 8.11**
AdvancedMC carriers		**Page 8.26**
Replacement parts (FRUs)		
Chassis Data Module - page 8.25		21990-226
Power entry module (PEM) - page 8.20		21990-224
Fuse 30 A/80 V for power entry module, PU 10 pieces		21990-225
Fan tray - page 8.22		21990-227 21990-228
Air filter - page 8.22		21990-229

Note

- Modified systems available on request

Systems – AdvancedTCA

AdvancedTCA ECO modular system, 14 slots, DC

12715004

12708006

Accessories: optional shelf manager

ServicePLUS see page 8.112

PICMG® Open Modular Computing Specifications

- Thanks to their reduced hot-swap features in the fan module, PEM, and CDM areas, Schroff ECO modular systems are optimized for cost-sensitive applications
- A sophisticated modular concept opens up the option of obtaining the ECO modular system in several versions with a range of performance classes
- 14 U, 14-slot system, airflow from bottom front to top rear, 2 slots for Schroff shelf manager ACB-VI
- Support for on-blade shelf management
- A fan module under the board cage featuring an integrated, replaceable air filter, RJ45 sockets for connecting serial interfaces of Schroff shelf managers, plus LEDs for displaying Telco alarms
- Fan control via Schroff shelf managers, on-blade shelf managers, or – in autonomous mode – a temperature sensor in the air inlet area
- Option of additional temperature sensor in air exit area
- Shelf FRU data SEEPROMs directly on the backplane rear, UL recognized, E229721 type T16
- Non-hot-swap PEM at the rear, redundant in 450 W/slot version, non-redundant in 250 W/slot version

NEW

Delivery includes (completely assembled, cabled and tested)

Item	Qty	Description
1	1	Shielded 19" subrack, St, 14 U, 84 HP, 383 mm deep, powder-coated, black, RAL 9005, with 14 vertical slots at front for 8 U, 6 HP, 280 mm deep boards and 14 slots at rear, 8 U, 6 HP, 70 mm deep
2	1	Backplane, 14 slots
3a	1	250 W/slot: Non-redundant power connection, -48 V_{DC}/-60 V_{DC}, at the rear, with 1 pair of power terminals (2 fuses, 50 A each)
3b	1	450 W/slot: Redundant power connection, -48 V_{DC}/-60 V_{DC}, at the rear, with 4 pairs of power terminals (8 fuses, 50 A each)
4	1	Fan unit with 8 fans, exchangeable air filter, Telco alarm display, and interfaces for shelf managers
5	2	Mounting bracket, for installation in 19" cabinets

Order Information

Cooling capacity	Power	Airflow	Transmission rate	Voltage	Number of slots	Height U	Backplane type	Part no.
250 W/slot	250 W/slot, non-redundant	from front to rear	40 Gbps	-48/-60 V_{DC}	14	14	Dual star, bussed IPMB	**11990-900**
450 W/slot	450 W/slot, redundant	from front to rear	40 Gbps	-48/-60 V_{DC}	14	14	Dual-dual star, bussed IPMB	**11990-903**
Accessories								
Shelf manager, ACB-VI, bussed 1 piece								**21990-404**

Note

- Modified systems available on request

Accessories overview

- Front panel **reinforced** with die-cast end piece and IEA handle **with** spring loading, see from page 8.11
  - Kit
  - Individual configuration
- Front panel and IEA handle **without** spring loading, see from page 8.13
  - Kit
  - Individual configuration (Al or stainless steel) with/without spring loading
- AdvancedTCA front panels with integrated side two cover, see page 8.15
- AdvancedTCA air deflectors, filler panels, see page 8.16
- Shelf managers, see page 8.19
- Backplanes, see page 8.18
- Replacement parts - field replacement units (FRUs), see from page 8.19

Front panel reinforced with die-cast end piece and IEA handle with spring loading

12708004

Delivery excludes board

12707017

AdvancedTCA spring-loaded IEA handle

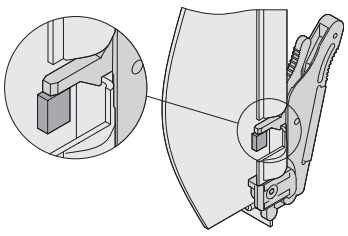

12707051

Handle with plunger contact (plunger style)

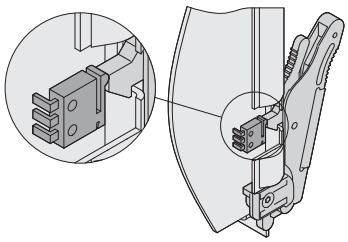

12707052

Handle with lever contact (lever style)

- Schroff hot-swap handle (when open, the spring loading aids the complete opening of the handle and thus facilitates the insertion of the board)
- Front panel: aluminum or stainless steel, reinforced by the die-cast end piece (increases robustness of front panel)
- Versions for 2 microswitch types (plunger or lever contact)
- EMC textile gasket

Delivery comprises (Kit)

Item	Qty	Description
1	1	Front panel
3	2	Die-cast endpiece, alignment pin, knurled screws M3
2	1	Lower IEA handle incl. bearing, spring assisted, (pre-fitted as transport securing device)
4	1	Upper IEA handle incl. bearing, spring-assisted, (pre-fitted as transport securing device)
5	1	EMC gasket, length 299 mm
6	1	Fixing material kit and user manual

Order Information

Height U	Width HP	Front panel reinforced with die-cast end piece and IEA handle with spring loading	Part no.
8	6	Stainless steel, with AdvancedTCA IEA handle (plunger type)	**20818-160**
8	6	Stainless steel, with AdvancedTCA IEA handle (lever type)	**20818-161**
8	6	Al extrusion, 1 mm, with AdvancedTCA IEA handle (plunger style)	**20818-169**
8	6	Al extrusion, 1 mm, with AdvancedTCA IEA handle (lever style)	**20818-170**
Accessories			
AdvancedTCA handle (IEA) design element Plastic, transparent, to clip on, for customers' logos, UL 94 V-0, PU 10 pcs			20818-140

Note

- Front panels with copper-beryllium gasket (CuBe) available on request
- Front panels with board cover on request
- With its front panel service Schroff offers extensive modification options, including custom cut-outs, foils and screen printing, www.frontpanelexpress.eu
- Intuitive Ergonomic Aesthetic = IEA handle

FRONT PANEL EXPRESS

Configuration: Front panel reinforced with die-cast end piece and IEA handle with spring loading

Order Information

		Handle with spring loading and die-cast end piece		Front panel		EMC textile gasket	Design element for handle
		Plunger style	Lever style	Stainless steel	Al extrusion		
12708004		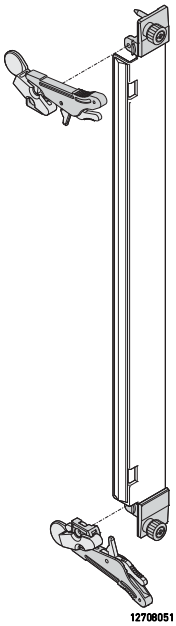 12708051	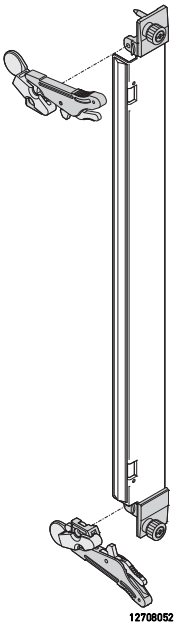 12708052	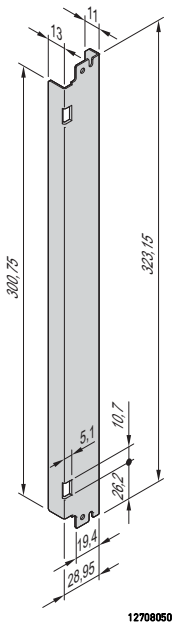 12708050	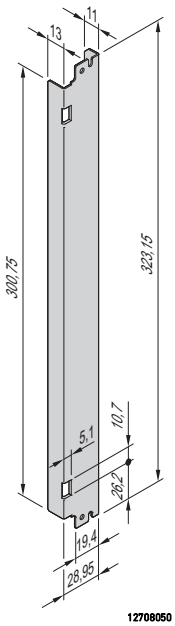 12708050	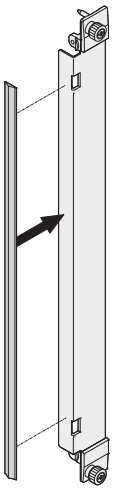 12712051	12706024
		2 x handle with spring loading; 2 x die-cast end pieces, PIN, M3 screw; with the IEA handle, when open, the spring loading holds the handle open and thus facilitates insertion of the board		8 U, 6 HP, stainless steel, 1 mm	8 U, 6 HP, Al extrusion, 1 mm	PET triangular gasket, height 2.3 mm, conductive coating CuNi, UL 94 V0, self-adhesive	Plastic, transparent, clips in, UL 94 V-0
		PU 1 kit		1 piece	1 piece	PU 10 pieces	PU 10 pieces
Plunger style		**20818-163**	–	**31596-791**	**31596-899**	21596-376	20818-140
Lever style		–	**20818-164**	**31596-792**	**31596-900**	21596-376	20818-140

Note

- Intuitive Ergonomic Aesthetic = IEA handle

Front panels and IEA handle (without spring loading)

12709002

Left: application example; right: scope of delivery without board

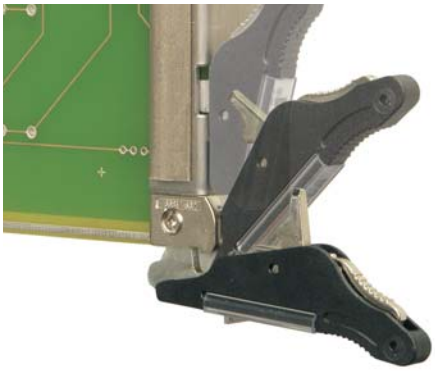

12707017

AdvancedTCA IEA handle

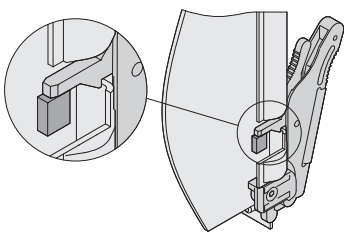

12707051

Handle with plunger contact (plunger style)

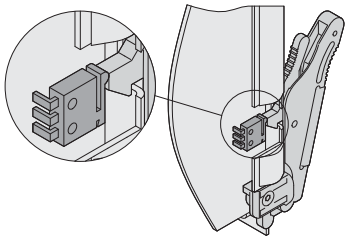

12707052

Handle with lever contact (lever style)

- Schroff hot-swap handle (when open, the handle must be held in the open position)
- Stainless steel front panel
- Versions for 2 microswitch types (plunger or lever contact)
- EMC textile gasket

Delivery comprises ((kit))

Item	Qty	Description
1	1	Stainless steel or Al extrusion front panel incl. alignment pin and M3 knurled screws
2	1	Lower handle incl. bearing
3	1	Upper handle incl. bearing
4	1	EMC mesh gasket
5	1	Fixing material kit (M2.5 screws incl. thread locking compound)

Order Information

Height U	Width HP	Front panels and IEA handle (without spring loading)	Part no.
8	6	Stainless steel, with AdvancedTCA IEA handle (plunger type)	**21596-324**
8	6	Stainless steel, with AdvancedTCA IEA handle (lever type)	**21596-325**
Accessories			
AdvancedTCA handle (IEA) design element Plastic, transparent, to clip on, for customers' logos, UL 94 V-0, PU 10 pcs			20818-140

Note

- Al front panel available through individual configuration service
- Front panels with copper-beryllium gasket (CuBe) available on request
- Front panels with board cover on request
- With its front panel service Schroff offers extensive modification options, including custom cut-outs, foils and screen printing: www.frontpanelexpress.eu
- Intuitive Ergonomic Aesthetic = IEA handle

FRONT PANEL EXPRESS

Front panels and IEA handle (with/without spring loading)

Order Information

	IEA handle (with spring loading)	IEA handle (without spring loading)	Front panel		EMC textile gasket	Design element for handle
			Stainless steel	Al extrusion		
12909002	12707017	12707017	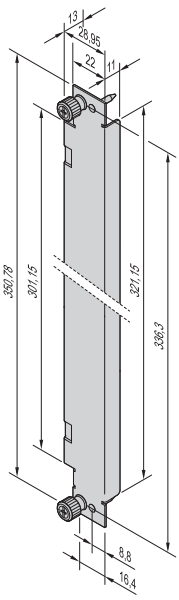 12705059	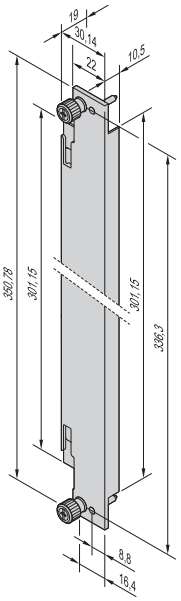 12708050	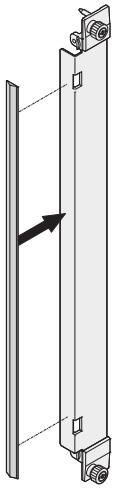 12712051	12706024
	Pre-fitted handle with microswitch activation; when open, the spring loading of the IEA handle holds the handle open and thus facilitates insertion of the board	Pre-fitted handle with microswitch activation; when open, the handle must be held in open position	Stainless steel, 1 mm, 8 U, 6 HP	Al extrusion, 2.5 mm, 8 U, 6 HP	PET triangular gasket, height 2.3 mm, conductive coating CuNi, UL 94 V-0, self-adhesive	Plastic, transparent, clips in, UL 94 V-0
	PU 10 pieces	PU 10 pieces	1 piece	1 piece	PU 10 pieces	PU 10 pieces
Plunger style, upper	**20818-145**	**20818-121**	**31591-422**	**31596-575**	21596-376	20818-140
Plunger style, lower	**20818-146**	**20818-122**	**31591-422**	**31596-575**	21596-376	20818-140
Lever style, upper	**20818-147**	**20818-123**	**31596-423**	**31596-576**	21596-376	20818-140
Lever style, lower	**20818-148**	**20818-124**	**31596-423**	**31596-576**	21596-376	20818-140

Note

- Intuitive Ergonomic Aesthetic = IEA handle

Systems – AdvancedTCA

Front panel with integrated Side Two Cover

12706022

- For protection of components on solder side of backplane
- Customised version available on request
- Schroff offers extensive modification options with the Front Panel Service, including customised cut-outs, foils and silk-screen printing, www.frontpanelexpress.eu

FRONT PANEL EXPRESS

Front panel to cover open shelf manager slots

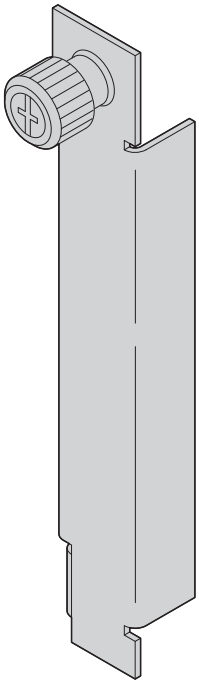

12706052

Delivery includes

Item	Qty	Description
1	1	Front panel, St, stainless, height 99.32 mm, width 15.22 mm, including EMC sealing
2	1	Knurled screw

Order Information

Description	Qty/PU piece	Part no.
Front panel to cover open shelf manager slots	1	21596-012

AdvancedTCA air deflectors, filler panels

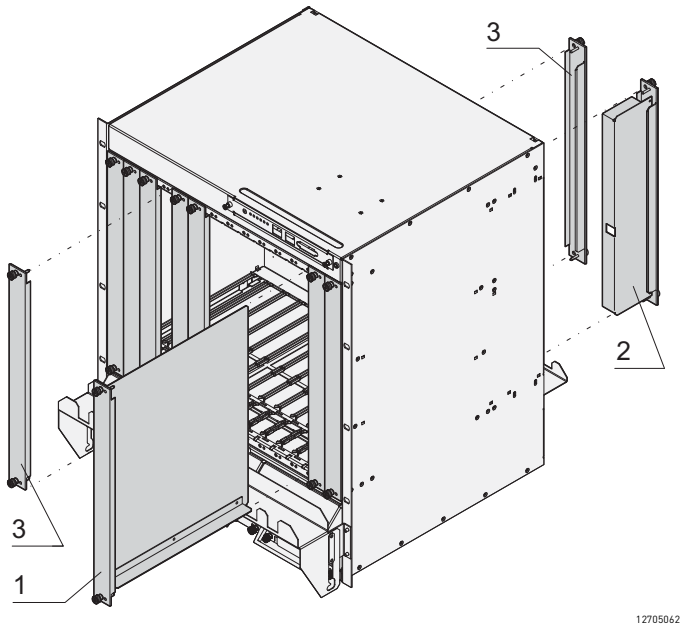

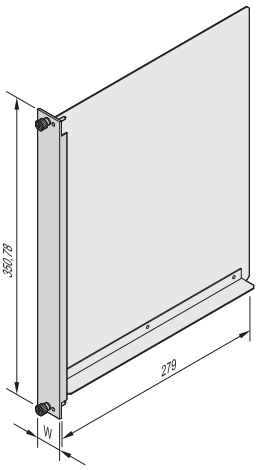

Item 1

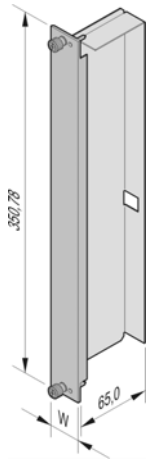

Item 2

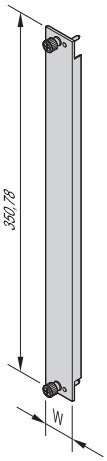

Item 3

- Front panels, stainless steel or Al extrusion
- 6 HP front panels in three versions
  - Front: Front panel with air baffle (item 1, air baffle blocks the air from unused slots)
  - Rear: Front panel with air baffle (item 2, air baffle blocks the air from unused slots)
  - Only front panel (item 3)

Delivery comprises (Kit)

Item	Qty	Description
1	1	Front panel
2	1	Air baffle (front or rear)

Order Information

AdvancedTCA air deflector

Item	Height U	Width HP	Depth mm	W mm	Description	Part no.
1	8	6	280	30.14	Front panel, Al extrusion, incl. air baffle, with mesh gasket	**21596-008**
1	8	6	280	28.95	Front panel, stainless steel, incl. air baffle with mesh gasket	**21591-079**
2	8	6	70	30.14	Front panel, Al extrusion, for rear I/O area, incl. air baffle, with mesh gasket	**21591-107**
2	8	6	70	28.95	Front panel, stainless steel, for rear I/O area, incl. air baffle with mesh gasket	**21591-099**

AdvancedTCA filler panel

Item	Height U	Width HP	Depth mm	W mm	Description	Part no.
3	8	6	–	30.14	Al extrusion, front panel with mesh gasket	**21591-104**
3	8	6	–	28.95	Front panel, stainless steel, with mesh gasket	**21591-097**

Note

- Version with CuBe gasket available on request
- AdvancedMC carriers see page 8.26

Systems – AdvancedTCA

Shelf manager, ACB-V/VI, bussed/radial

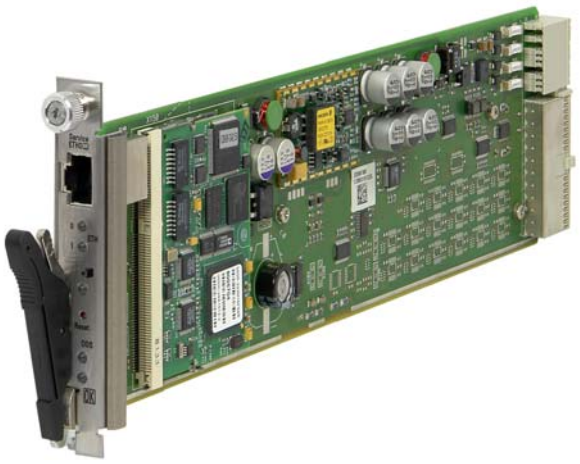

12708006

12706021

Cable for the serial console of the shelf manager via the SAP

- Shelf manager for Schroff AdvancedTCA systems
- Based on Pigeon Point shelf management technology ShMM 500 (ACB-V) and ShMM 700 (ACB-VI) respectively
- Versions for bussed or radial IPMB
- Ethernet service interface on the front panel
- Serial console for the shelf manager is available via SAP
- ACB-V and ACB-VI shelf managers are plug compatible but require different shelf FRU files
- Shelf FRU files and firmware versions are available for download

Order Information

Version	ShMM	IPMB	Part no.
ACB-V	500	bussed	**21596-300**
ACB-V	500	radial	**21596-301**
ACB-VI	700	bussed	**21990-404**
ACB-VI	700	radial	**21990-405**
Accessories			
Cable for the serial console of the shelf manager via the SAP RJ 45 Cat 5 plug - D-Sub plug, 9-pin, length 2 m, 1 piece			**23204-187**

Backplane

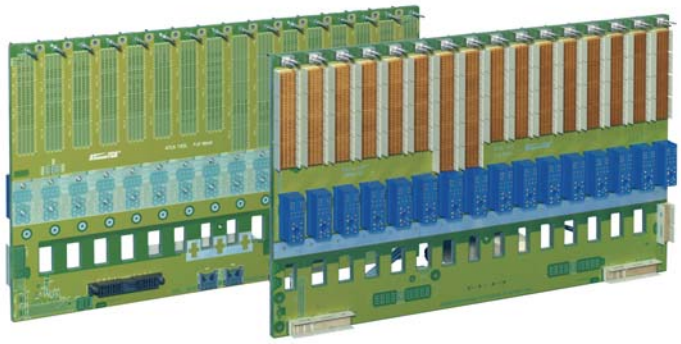

12606003

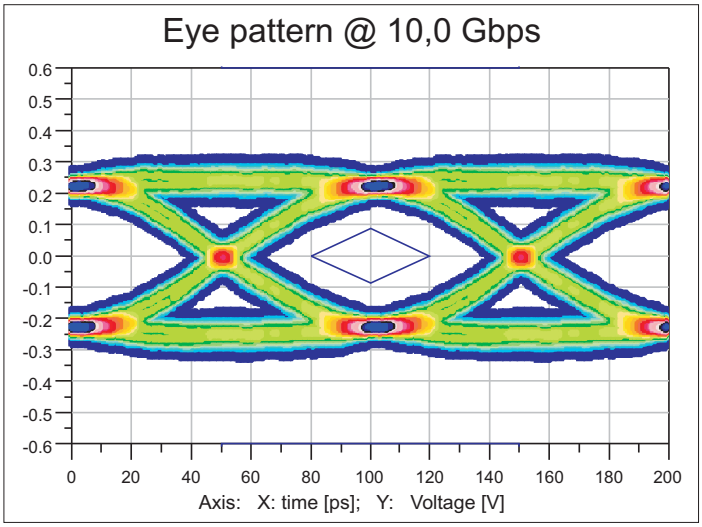

12707058

All Schroff AdvancedTCA systems are equipped with a high-performance Schroff backplane. Thanks to our years of experience
in high-speed data transfer we have now built 40G backplanes to the XAUI specification into our systems, which are constructed with the low-cost FR 4 material. Additionally, the number of layers has been reduced to less than half of the first backplanes.

- The Schroff AdvancedTCA systems are equipped and available with:
  - Backplane with dual star, full mesh and replicated mesh topology; dual dual star topology on request
  - Bussed or radial intelligent platform management interface (IPMB)
  - Redundant power supply, divided into up to four independent segments
  - Point-to-point connection structure independent of protocol
  - Data transfer rates of up to 40 Gbps
  - I^2C bus for internal monitoring
  - Outstanding eye pattern of up to 10 Gbps per differential pair (40G backplane)

Systems – AdvancedTCA

Field replaceable units (FRUs)

Field replaceable unit (FRU) designates system components that can be replaced on site. This reduces system downtime to a minimum. Schroff offers various FRU components for AdvancedTCA systems:

- Power entry modules, see from page 8.19
- Fan trays, see from page 8.20
- Air filters see page 8.22
- Shelf alarm panels, see from page 8.23
- Shelf alarm display, see page 8.24
- Chassis data module, see page 8.25

Power entry module for 5 U, 6 slot AdvancedTCA system

12710002

- Input 48 V_{DC}/60 V_{DC}
- Plugged-in at rear of chassis
- For 2 pairs of lines each (RTN and -48 V_{DC}/-60 V_{DC}) per input
- Delivers up to 350 W/slot
- Hot-swap push-button and LED display (hot-swap, alarms, etc.)
- 2 circuit breakers and 2 double lugs (power terminals)

Order Information

Description	Qty/PU	Part no.
Power entry module 6-slot system (11596-160, 11596-161)	1	21990-058

Note

- AdvancedTCA systems see from page 8.6

Power entry module for 12 U, 14 slot AdvancedTCA system

12706006

- Input 48 V_{DC}/60 V_{DC}
- Plugged-in at rear of chassis
- For 4 pairs of lines each (RTN and -48 V_{DC}/-60 V_{DC}) per input
- 8 fuses 30 A/80 V each

Order Information

Description	Qty/PU	Part no.
Power entry module for 12 U, 14 slot AdvancedTCA system (11596-300, -303)	1	21596-003
Fuse 30 A/80 V for power entry module, PU 10 pieces		21191-207

Note

- AdvancedTCA systems see page 8.9

Power entry module for 13 U, 14/16 slot AdvancedTCA system

12706006

- Input 48 V_{DC}/60 V_{DC}
- Plugged-in at rear of chassis
- For 4 pairs of lines each (RTN and -48 V_{DC}/-60 V_{DC}) per input
- 8 fuses 30 A/80 V each

Order Information

Description	Qty/PU	Part no.
Power entry module for 13 U, 14/16 slot AdvancedTCA system (11990-600, -601, -603)	1	21596-020
Fuse 30 A/80 V for power entry module, PU 10 pieces		21191-207

Note

- AdvancedTCA systems see from page 8.9

Power entry module for 14 U, 14-slot AdvancedTCA system

12712003

- Input 48 V_{DC}/60 V_{DC}
- Plugged-in at rear of chassis
- For 2 pairs of lines each (RTN and -48 V_{DC}/60 V_{DC}) per input
- 8 fuses 50 A/80 V each

Order Information

Description	Qty/PU	Part no.
Power entry module for 14 U, 14-slot AdvancedTCA system (11990-10x)	1	21990-224
Accessories		
Fuse50 A/80 V for power entry module, PU 10 pieces		21990-225

- AdvancedTCA systems see page 8.8

Fan tray for 5 U, 6 slot AdvancedTCA system

12710003

- Fan tray with 6 axial fans to cool front and rear boards in system
- Cooling capacity up to 350 W per board
- Extractor handle, hot-swap push-button and LED display (hot-swap, alarms, etc.)

Order Information

Description	Qty/PU	Part no.
Fan tray for 5 U, 6-slot system (11596-160, 11596-161)	1	21990-057

Note

- AdvancedTCA systems see from page 8.6

Systems – AdvancedTCA

Fan tray for 12 U, 14 slot AdvancedTCA system

12706007

- Fan tray with 2 fans (330 m^3/h = 195 cfm each) to cool front and rear boards in system
- Extractor handle and LED display (hot-swap, alarms, etc.)

Order Information

Description	Qty/PU	Part no.
Fan tray 12 U, 14 slot system (11596-3xx)	1	21596-236

Note

- AdvancedTCA systems see from page 8.5

Fan tray for 13 U, 14 slot AdvancedTCA system

12706009

- Fan tray with 3 radial fans (300 m^3/h = 175 cfm) to cool front and rear boards in the system
- Extractor handle and LED display (hot-swap, alarms, etc.)

Order Information

Description	Qty/PU	Part no.
Fan tray for 14-slot systems (11990-60x)	1	21990-184

- AdvancedTCA systems see page 8.6

Fan tray for 3 U, 2 Slot-AdvancedTCA system

12715005

- Fan tray with 2 * 2 axial fans (108 m^3/h = 64,4 cfm) to cool front and rear boards in the system
- Extractor handle and LED display (Operation and Error)

Order Information

Description	Qty/PU	Part no.
Fan tray for 2-slot systems (11990-800, -801, -802, -803)	1	21990-526

- AdvancedTCA systems see page 8.10

Upper fan tray for 14 U, 14-slot AdvancedTCA system

12712001

- Fan tray with 6 axial fans (570 m^3/h = 336 cfm) to cool front and rear boards in the system
- Extractor handle and LED display (hot-swap, alarms, etc.)
- Telco alarm interface on front

Order Information

Description	Qty/PU	Part no.
Upper fan tray for 14 U, 14-slot systems (11990-10x)	1	21990-227

- AdvancedTCA systems see page 8.8

Lower fan tray for 14 U, 14-slot (11990-10x)

12712002

- Fan tray with 6 axial fans (570 m^3/h = 336 cfm) to cool front and rear boards in the system
- Extractor handle and LED display (hot-swap, alarms, etc.)
- Telco alarm interface on front

Order Information

Description	Qty/PU	Part no.
Lower fan tray for 14 U, 14-slot systems (11990-10x)	1	21990-228

- AdvancedTCA systems see page 8.8

Air filters for AdvancedTCA systems

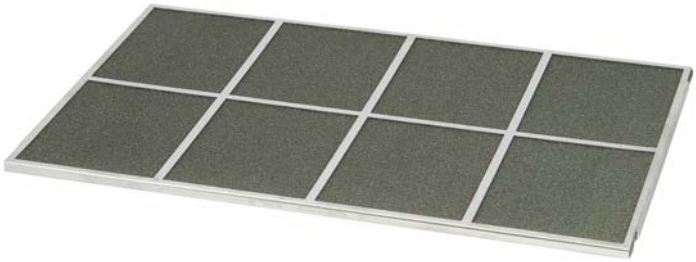

12706005

Photo shows air filter of 14 slot system

- 45 PPE, 80 % dust collection to NEBS GR-78 Core standard
- Material Polyurethan UL 94 HF1

Order Information

Air filter	Qty/PU	Part no.
for 3 U, 2 slot systeme (11990-800, -801, -802, -803)	1	21990-527
for 5 U, 6 slot systems (11596-16x)	1	21990-059
for 13 U, 16 slot systems (11592-50x)	1	21594-144
for 14 U, 14 slot system (11990-10x)	1	21990-229

Note

- AdvancedTCA systems see from page 8.4

Systems – AdvancedTCA

Shelf alarm panel for 12 U, 14 slot AdvancedTCA system

12706008

- Displays all alarm signals in accordance with AdvancedTCA specification
- With alarm cut-off push button
- Two RJ 45 sockets to connect one serial console (serial interface of the two shelf managers)
- D-Sub plug for Telco alarm

Order Information

Description	Qty/PU	Part no.
Shelf alarm panel for 12 U, 14 slot systems (11592-40x, 11596-30x)	1	21596-022

- AdvancedTCA systems see page 8.5

Shelf alarm panel for 13 U, 14 slot AdvancedTCA system

12707004

- For output of all Telco alarm signals in accordance with AdvancedTCA Specification
- D-Sub socket for Telco alarm

Order Information

Description	Qty/PU	Part no.
Shelf alarm panel for 13 U, 14 slot systems (11596-10x)	1	21596-140

Note

- AdvancedTCA systems see page 8.6

Shelf alarm panel for 13 U, 16 slot AdvancedTCA system

12706010

- For output of all Telco alarm signals in accordance with AdvancedTCA specification
- D-Sub socket for Telco alarm

Order Information

Description	Qty/PU	Part no.
Shelf alarm panel for 13 U, 16 slot systems (11592-50x)	1	21596-025

Note

- AdvancedTCA systems see page 8.9

Shelf alarm display for 13 U, 14 and 16 slot AdvancedTCA system

12706015

- Display the Telco and fan tray alarm signals in accordance with AdvancedTCA Specification
- With alarm cut-off push button
- Two RJ 45 sockets to connect one serial console (serial interface of the two shelf managers)

Order Information

Description	Qty/PU	Part no.
Shelf alarm display for 13 U, 14 and 16 slot systems (11592-5xx, 11596-1xx)	1	21596-026

Note

- AdvancedTCA systems see page 8.9

Systems – AdvancedTCA

Chassis data module
for 12, 13 and 14 U AdvancedTCA systems

12706014

Illustration shows chassis data module 21596-023

- SEEPROM for chassis FRU data (user must specifically programm it for the chassis)
- Temperature sensors for input temperature of chassis
- Hall sensor for filter mat ("air filter present")

Order Information

Chassis data module	Qty/PU	Part no.
for systems 11592-50x, 11596-30x, 11596-60x	1	21596-023
for systems 11990-10x	1	21990-226

Note

- AdvancedTCA systems see from page 8.9

Content

Cabinets 1

Wall mounted cases 2

Accessories for cabinets and wall mounted cases . 3

Climate control . 4

Electronics cases 5

Subracks/ 19" chassis 6

Front panels, plug-in units . . . 7

Systems 8

Power supply units 9

Backplanes . . . 10

Connectors, front panel component system 11

Appendix 12

Systems – AdvancedMC carriers

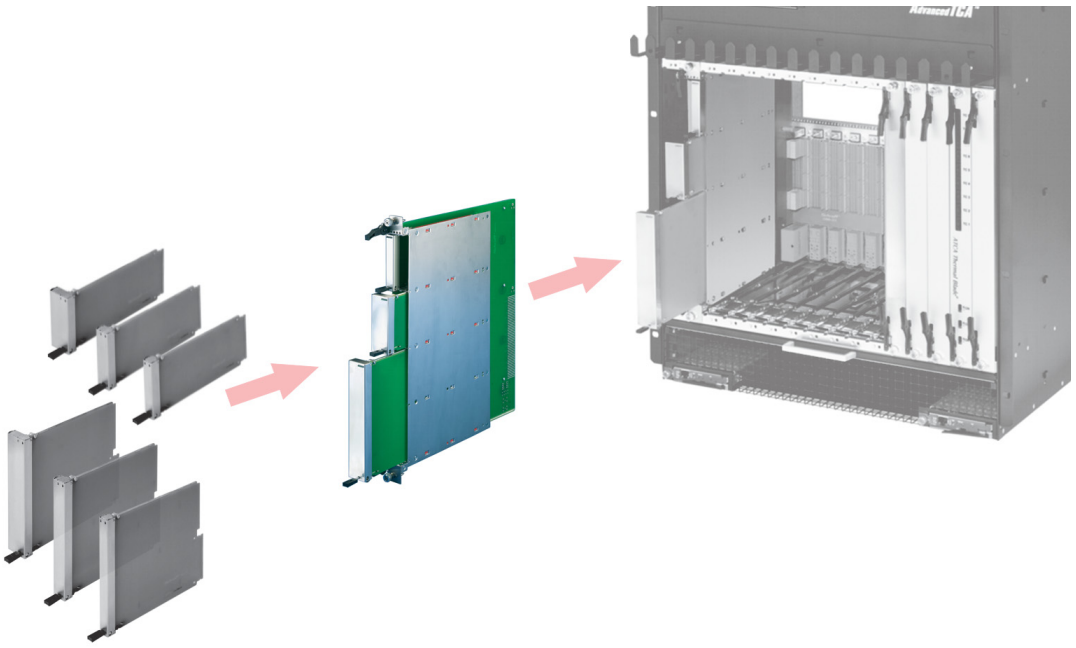

12806028

AdvancedMC carriers

AdvancedMC carriers are plug-in units that are slotted into an AdvancedTCA system. They contain the carrier board that accepts AdvancedMC modules.

Electrical connection to the AdvancedTCA backplane is via connectors. With the fully-assembled AdvancedMC carrier in place, cost-effective additional functions may be integrated into the system.

The standard, in accordance with PICMG specification AMC.0 R2.0, defines three different mechanical versions:

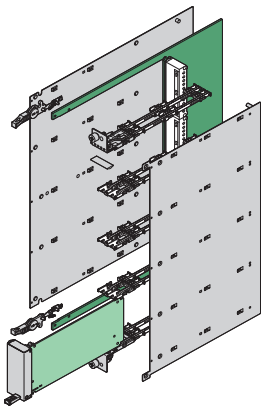

12805082

Cutaway carrier

- Carrier board is cut out in the area of the AdvancedMC modules
- Max. placement: 8 single compact or 4 single full-size AdvancedMC modules
- Combinations of full-size and compact modules are possible

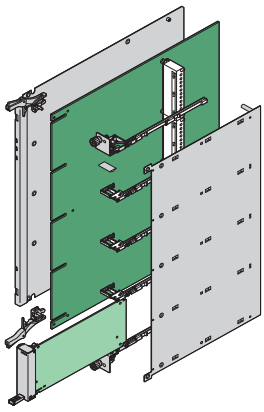

12805083

Conventional carrier

- Carrier board runs continuously from front to rear
- Max. placement: 4 single compact or 4 single mid-size AdvancedMC modules

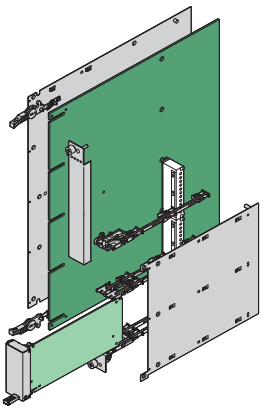

12805081

Hybrid carrier

- Carrier board is a combination of conventional and cutaway carrier
- The maximum placement depends on the carrier board design
- Combinations of all AdvancedMC modules are possible

Systems – AdvancedMC carriers

Overview 8.26

AdvancedMC carriers for AdvancedTCA systems

- Cutaway, conventional and hybrid carrier mechanics for
  - compact AdvancedMC carrier boards
  - Mid-size AdvancedMC carrier boards
  - Full-size AdvancedMC carrier boards
- Standard versions from stock
- Individual carrier/module combination of your choice

PICMG® Open Modular Computing Specifications

12807020

AdvancedMC carriers

- 1 slot chassis, 8 U, 6 HP for AdvancedTCA systems
- Inserter/extractor handle for microswitch activation
- Versions
  - **Cutaway carrier** for compact and full-size modules
  - **Conventional carrier** for mid-size and compact modules

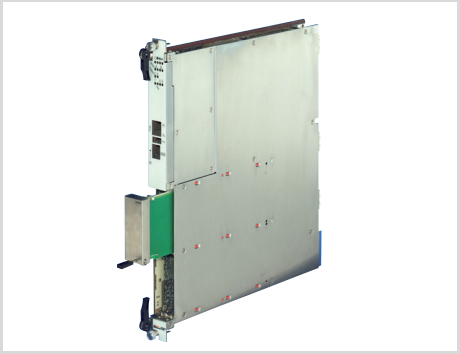

Individual solutions on request

- AdvancedMC hybrid carrier
- AdvancedMC hybrid mechanics for rugged AdvancedMC modules (MicroTCA.1)

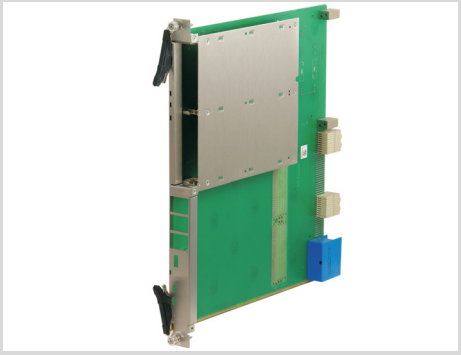

12812005 12806016

30407004

ServicePLUS from page 8.34

e.g. individual configuration and fitting of hybrid carriers)
e.g. modifications (cut-outs, special colours)
e.g. custom solutions (special sizes)

www.schroff.biz/ServicePLUS

Cutaway carriers
For compact and full-size modules
Complete kits 8.28
Kit without struts, guide rails 8.29
Guide rails/struts 8.30
Microswitches ... 8.31
Differences between standard and MF handles for AMC carriers . 8.31

Conventional carriers
For mid-size and compact modules
Complete kits with AdvancedTCA IEA handle 8.32
Guide rails/struts 8.33
Microswitches ... 8.33

ServicePLUS .. 8.34

ServicePLUS configuration
Hybrid carrier .. 8.35

Systems – AdvancedMC cutaway carrier

Carrier mechanics for compact and full-size AdvancedMC modules

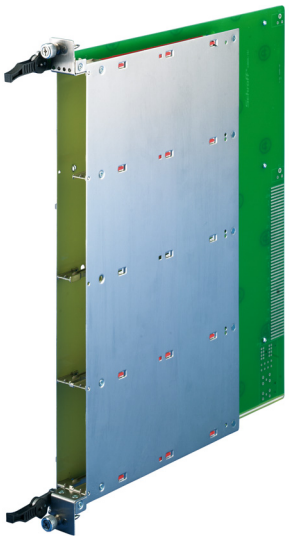

12805002

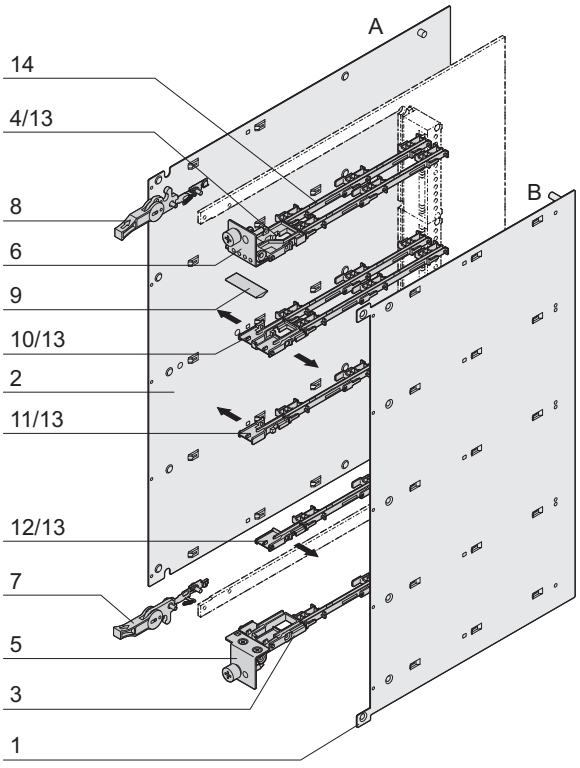

12807086

- Mechanics for cutaway carrier board (carrier **with** 3 different struts, guide rails, ESD clips)
- Stainless steel (EMC shielded)
- Width 1 slot (6 HP), height 8 U, corresponds to PICMG® AMC.0 R2.0
- Inserter/extractor handle, designed for microswitch activation hot-swap)

Delivery comprises (Kit)

Item	Qty	Description
1	1	Cover plate B (right), stainless steel, brushed, 0.6 mm, inner surface electrically insulated, exterior with protective film
2	1	Cover plate A (left), stainless steel, brushed, 0.6 mm, inner surface electrically insulated, exterior with protective film
3	1	Lower splitting extrusion (strut), Zn die-cast, nickel-plated
4	1	Upper splitting extrusion (strut), Zn die-cast, nickel-plated
5	1	Lower front panel, stainless steel, brushed, 1 mm, alignment pin and retention screws pressed in
6	1	Upper front panel, stainless steel, brushed, 1 mm, alignment pin and retention screws pressed in, with holes for LEDs
7	1	Standard inserter/extractor handle, with microswitch operation, plastic lever, black
8	1	Standard inserter/extractor handle, plastic lever, black
9	1	EMC profile seal, core: foam, sleeve: textile cladding with CuNi coating
10	3	Support member between cover A and B
11	3	Support member for cover A (on the left)
12	3	Support member for cover B (on the right)
13	8	ESD clip
14	10	AdvancedMC guide rail, PBT, UL 94 V-0, red
15	1	Assembly kit

Order Information

Description	Part no.
Carrier mechanics for AdvancedMC compact and full-size modules **with** struts, ESD clips and guide rails	10849-001
Accessories	
Microswitch, normally closed, for AdvancedMC carrier (compact and full-size modules) for soldering (SMD), PU 10 pieces	20849-236
Microswitch, normally open, for AdvancedMC carrier (compact and full-size modules) for soldering (SMD), PU 10 pieces	20849-235
Description inserter/extractor handle	Page 8.31
Microswitch description	Page 8.31
AdvancedMC module mechanics	Page 8.56

ServicePLUS see page 8.34

Systems – AdvancedMC cutaway carrier

Carrier mechanics for compact and full-size AdvancedMC modules

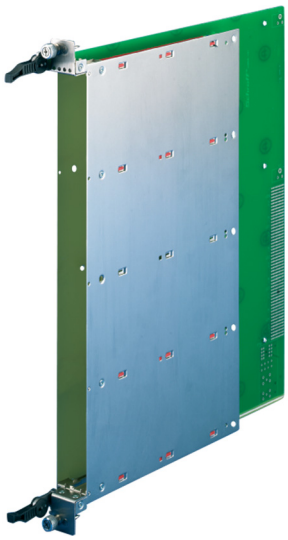

12807021

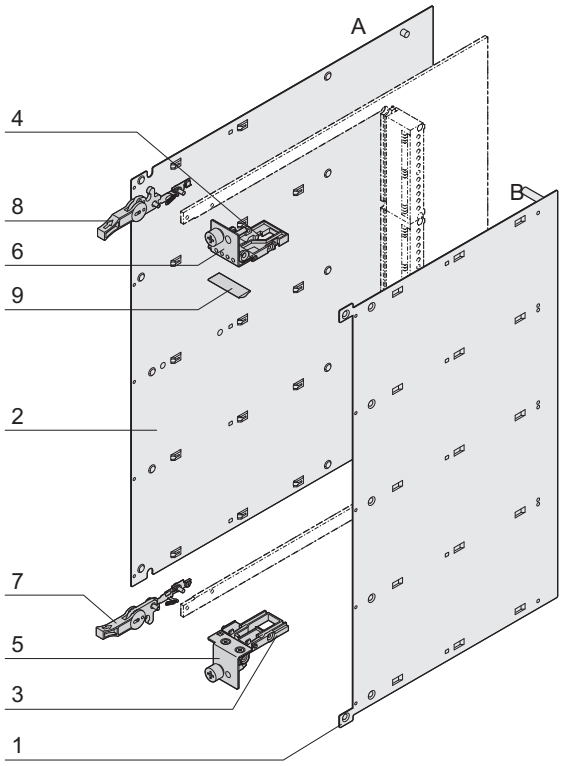

12805053

- Mechanics for cutaway carrier board (carrier **without** struts, guide rails, ESD clips, for individual placement)
- Stainless steel (EMC shielded)
- Width 1 slot (6 HP), height 8 U, corresponds to PICMG® AMC.0 R2.0
- Inserter/extractor handle, designed for microswitch activation (hot-swap)

Delivery comprises (Kit)

Item	Qty	Description
1	1	Cover plate B (right), stainless steel, brushed, 0.6 mm, inner surface electrically insulated, exterior with protective film
2	1	Cover plate A (left), stainless steel, brushed, 0.6 mm, inner surface electrically insulated, exterior with protective film
3	1	Lower splitting extrusion (strut), Zn die-cast, nickel-plated
4	1	Upper splitting extrusion (strut), Zn die-cast, nickel-plated
5	1	Lower front panel, stainless steel, brushed, 1 mm, alignment pin and retention screws pressed in
6	1	Upper front panel, stainless steel, brushed, 1 mm, alignment pin and retention screws pressed in, with holes for LEDs
7	1	Standard inserter/extractor handle, with microswitch operation, plastic lever, black
8	1	Standard inserter/extractor handle, plastic lever, black
9	1	EMC profile seal, core: foam, sleeve: textile cladding with CuNi coating
10	1	Assembly kit

Order Information

Description	Part no.
Carrier mechanics for AdvancedMC compact and full-size modules without struts, ESD clips and guide rails	**10849-002**
Accessories	
Microswitch, normally closed, for AdvancedMC carrier (compact and full-size modules) for soldering (SMD), PU 10 pieces	**20849-236**
Microswitch, normally open, for AdvancedMC carrier (compact and full-size modules) for soldering (SMD), PU 10 pieces	**20849-235**
Further struts, ESD clips and guide rails	**Page 8.30**
Description inserter/extractor handle	**Page 8.31**
Microswitch description	**Page 8.31**
AdvancedMC module mechanics	**Page 8.56**

ServicePLUS see page 8.34

Systems – AdvancedMC cutaway carrier

Board guides/struts for AdvancedMC compact and full-size modules

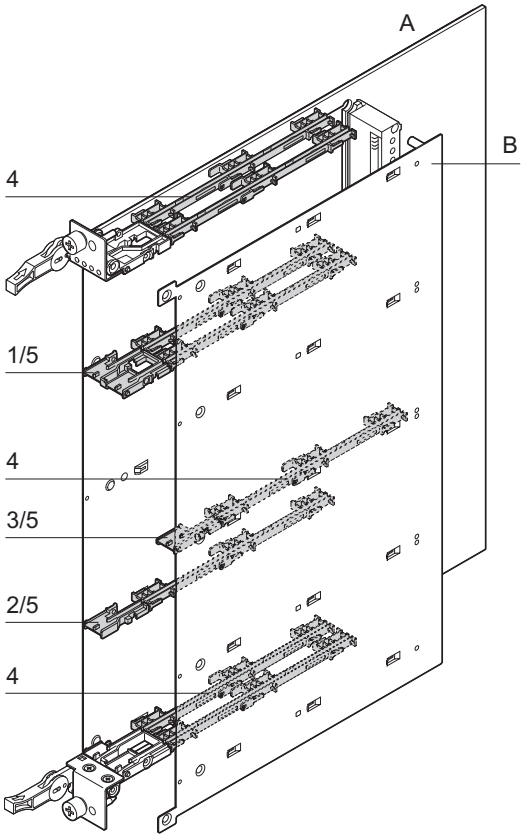

12805070

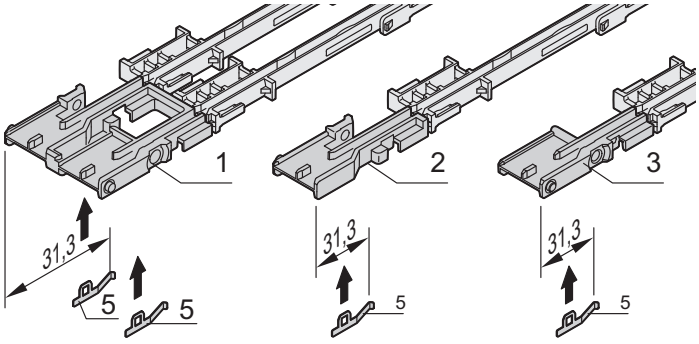

12805071

ServicePLUS see page 8.34

- Struts and guide rails are always required to guide boards
- 3 different struts
  - The strut is assembled between the cover plates A and B
  - The strut is assembled on the left of cover plate A
  - The strut is assembled on the right of cover plate B
- The ESD clip pushes into the strut (one per board guide)
- The guide rails clip into the cover plate

Order Information

Item	Description	Qty/PU	Part no.
1	Strut between cover A (left) and B (right), Zn die-cast, nickel-plated	10	**20849-009**
2	Splitting extrusion (strut) for cover A (left), Zn die-cast, nickel-plated	10	**20849-010**
3	Splitting extrusion (strut) for cover B (on the right), Zn die-cast, nickel-plated	10	**20849-011**
4	AdvancedMC guide rail, PBT, UL 94 V-0, red	10	**20849-008**
5	ESD clip, stainless spring steel, for deflection of electrostatic charges	50	**20849-021**
Accessories			
Microswitch, normally closed, for AdvancedMC carrier (compact and full-size modules) for soldering (SMD), PU 10 pieces, page 8.31			**20849-236**
Microswitch, normally open, for AdvancedMC carrier (compact and full-size modules) for soldering (SMD), PU 10 pieces - page 8.31			**20849-235**

Systems – AdvancedMC cutaway carrier

Microswitch for carrier (compact and full-size AdvancedMC modules)

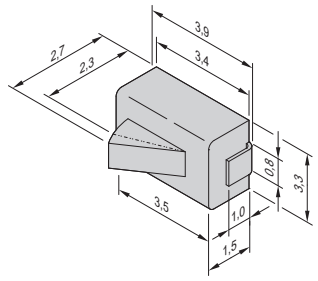

12807066

"Normally closed"

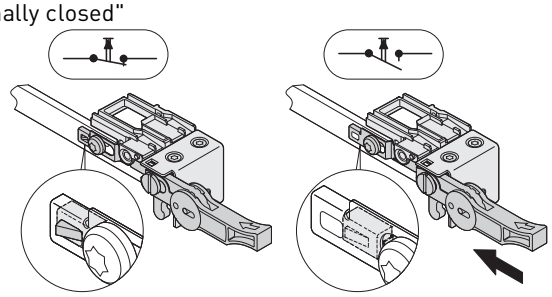
12807081

Handle in inoperative position Handle activated

Closer

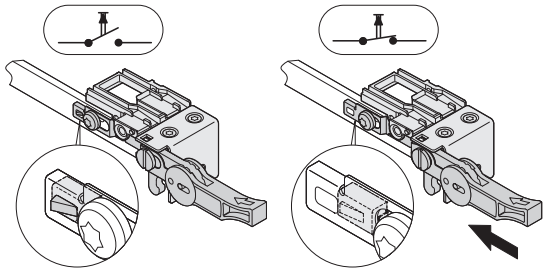
12807082

Handle in inoperative position Handle activated

- Microswitch for soldering (SMD)

Order Information

Description	Qty/PU	Part no.
Microswitch, **normally closed**, for AdvancedMC carrier (compact and full-size modules)	10	**20849-236**
Microswitch, **normally open**, for AdvancedMC carrier (compact and full-size modules)	10	**20849-235**

Technical data

Max. switch current	1 mA, 5 V_{DC}
Operating temperature	-15 °C ... +70 °C
Electrical lifespan	10^5 switching cycles

Differences between standard and MF handle for AdvancedMC carrier (compact and full-size modules)

Standard front handle - is included in delivery of carriers for compact and full-size modules

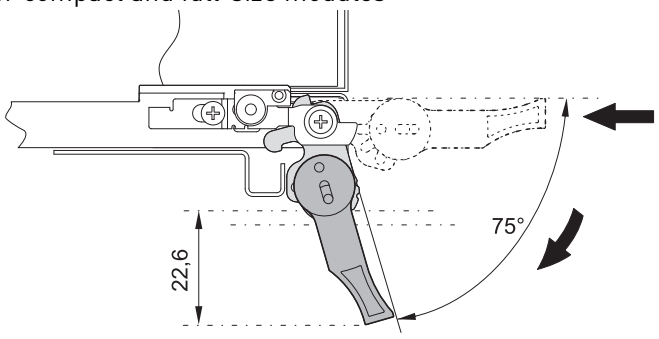

12806063

- Extractor handle 75° opening angle
- Insertion/extraction in one step
- Swing range: 23 mm below and above the pitch line
- Included in delivery of carrier

MF handle - can be exchanged by standard handle if needed (available on request)

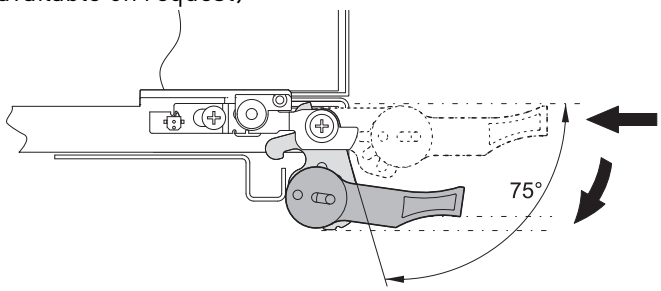

12805072

- Extractor handle 75° opening angle
- Insertion/extraction in three steps (2 operations)
- Small swing range (0 mm) below and above the pitch line. The lower respectively upper limit of the carrier is not exceeded during extraction.

Carrier mechanism for mid-size AdvancedMC modules with AdvancedTCA IEA handle, complete kit

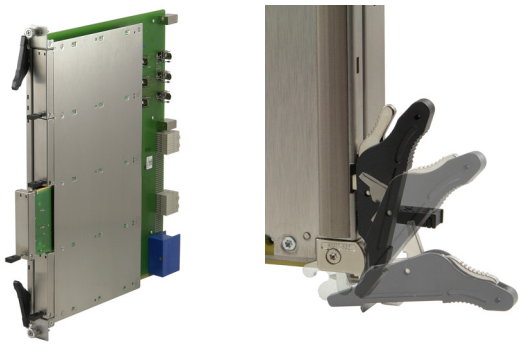

12808001 12808002

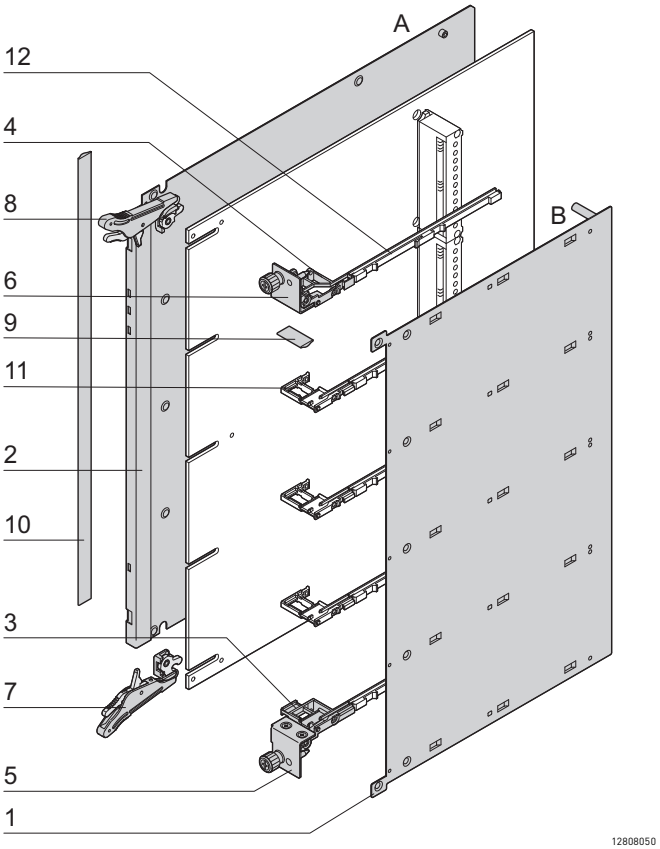

12808050

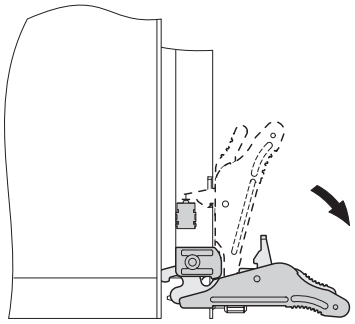

12808051

- Mechanics for conventional carrier, stainless steel (EMC shielded)
- Width 1 slot (6 HP), height 8 U, corresponds to PICMG® AMC.0 R2.0
- AdvancedTCA **IEA** inserter/extractor handle, designed for microswitch activation (hot-swap)
- Carrier mechanics with struts and guide rails for four modules

Delivery comprises (Kit)

Item	Qty	Description
1	1	Cover plate B (right), stainless steel, brushed, 0.6 mm, inner surface electrically insulated, exterior with protective film
2	1	Cover plate A (left), stainless steel, brushed, 0.6 mm, inner surface electrically insulated, exterior with protective film
3	1	Lower splitting extrusion (strut), Zn die-cast, nickel-plated
4	1	Upper splitting extrusion (strut), Zn die-cast, nickel-plated
5	1	Lower front panel, stainless steel, brushed, 1 mm, alignment pin and retention screws pressed in
6	1	Upper front panel, stainless steel, brushed, 1 mm, alignment pin and retention screws pressed in
7	1	Lower AdvancedTCA IEA inserter/extractor handle, with microswitch activation, plastic lever, black
8	1	AdvancedTCA IEA inserter/extractor handle, top, with microswitch activation, lever plastic, black
9	1	EMC profile seal, core: foam, sleeve: textile cladding with CuNi coating
10	1	EMC profile seal, core: foam, sleeve: textile cladding with CuNi coating
11	3	Splitting extrusion between covers A and B (4 ESD clips)
12	5	AdvancedMC guide rail, PBT, UL 94 V-0, green
13	1	Fixing material kit

Order Information

Description	Part no.
AdvancedMC carrier mechanism for mid-size AdvancedMC modules with AdvancedTCA IEA handle with struts, ESD clips and guide rails	10849-011
Accessories	
Microswitch for carriers (mid-size AdvancedMC modules) normally closed, for soldering (SMD), PU 10 pieces	20817-853
Microswitch for carriers (mid-size AdvancedMC modules) normally open, for soldering (SMD), PU 10 pieces	20817-909
AdvancedMC module mechanics	Page 8.56

Note

- Carrier with stronger cover plate A (1 mm) on request
- Carrier for compact AdvancedMC modules on request
- Southco type handle kit on request

ServicePLUS see page 8.34

Systems – AdvancedMC conventional carrier

Board guides/struts for AdvancedMC mid-size modules

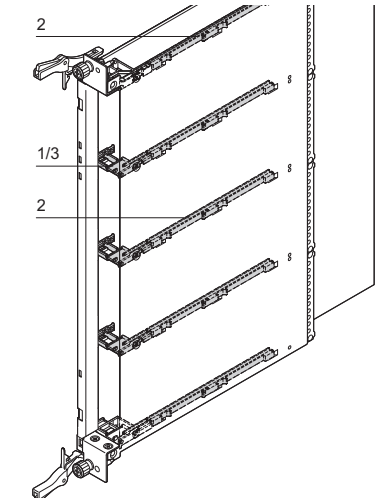

12806061

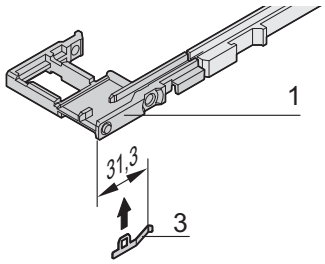

12806062

- Struts and guide rails are always required to guide boards
- Strut is assembled between cover plates A and B
- The ESD clip pushes into the strut (one per board guide)
- The guide rails clip into the cover plate

Order Information

Item	Description	Qty/PU	Part no.
1	Strut between cover A (left) and B (right), Zn die-cast, nickel-plated	10	**20849-242**
2	AdvancedMC guide rail for mid-size carrier, PBT, UL 94 V-0, green	10	**20849-166**
3	ESD clip, stainless spring steel, for deflection of electrostatic charges	50	**20849-021**

Microswitch for carriers (mid-size AdvancedMC modules)

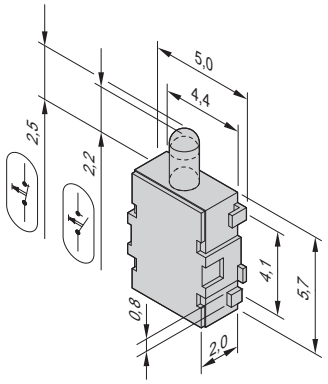

12807071

- Microswitch for soldering (SMD)
- Can be used for all conventional carrier handles

Order Information

Description	Qty/PU	Part no.
Microswitch (**normally closed**) for carrier (mid-size AdvancedMC modules)	10	**20817-853**
Microswitch (**normally open**) for carrier (mid-size AdvancedMC modules)	10	**20817-909**

Technical data

Max. switch current	100 mA, 12 V_{DC}
Operating temperature	-20 °C ... +60 °C
Electrical lifespan	5 x 10^5 switching cycles

Opener

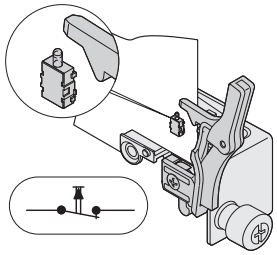

12807079

Closer

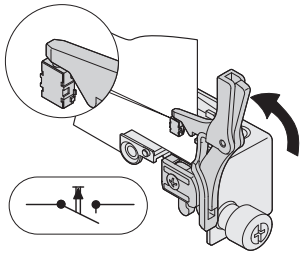

12807087

Systems – AdvancedMC carrier ServicePLUS

modification

Small changes. Large impact.

Custom drillings, cut-outs and special colours for off-the-shelf products

- Mechanical modifications
- Ready to send within 10 working days

solution

Simple. Fast. From one source.

Integration and custom developments

- Customised complete solutions

Systems – AdvancedMC carrier ServicePLUS

ServicePLUS: solution

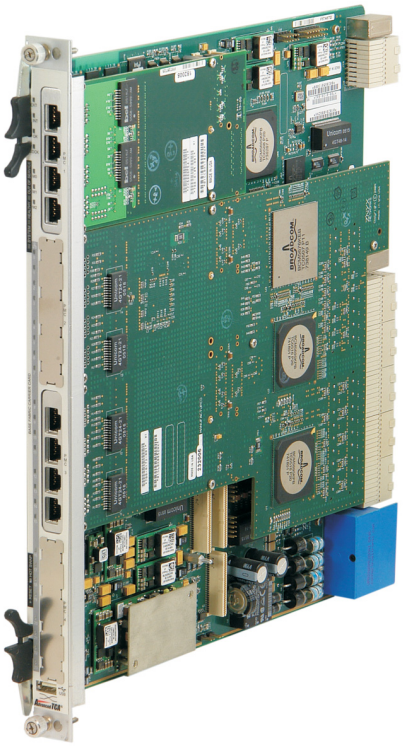

12812004

AdvancedMC carrier mechanics

- The carrier board is a combination of conventional and cutaway carriers
- Max. placement depends on the design of the carrier board
- Custom versions on request
  - Single/double combinations
  - Handles
    - AdvancedTCA IEA
    - AdvancedTCA Southco

Content

Cabinets 1
Wall mounted cases 2
Accessories for cabinets and wall mounted cases . 3
Climate control . 4
Electronics cases 5
Subracks/ 19" chassis 6
Front panels, plug-in units . . . 7
Systems 8
Power supply units 9
Backplanes . . . 10
Connectors, front panel component system 11
Appendix 12

Systems – MicroTCA

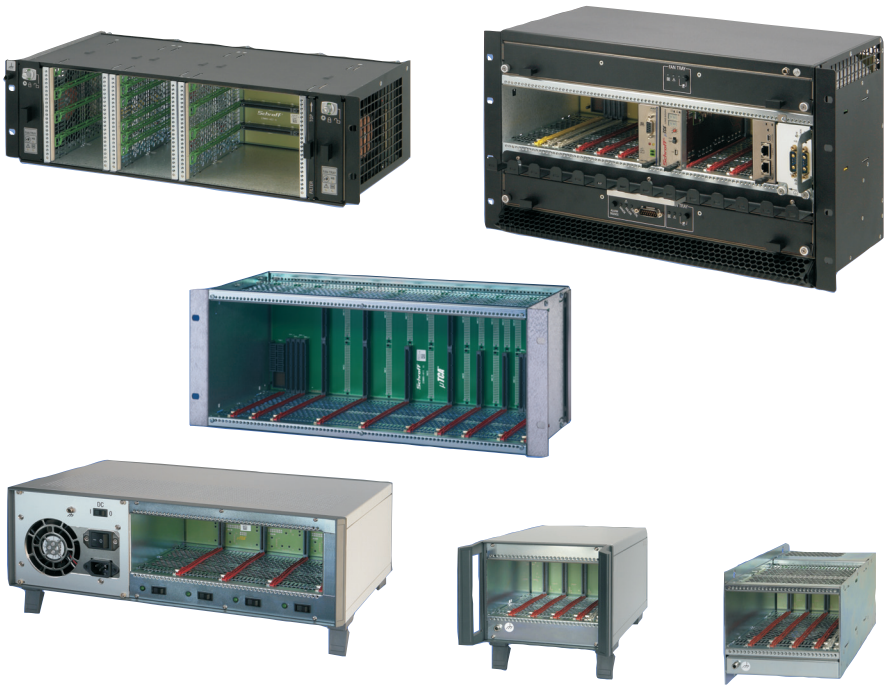

12907003

MicroTCA (Micro Telecommunications Computing Architecture)

MicroTCA.0 R1.0 is a modular standard that utilises AdvancedMC modules. These are plugged directly onto the backplane.

In addition to standard systems, modifications and customised solutions, Schroff also offers all components for building systems.

The central unit of a MicroTCA system is the MicroTCA carrier hub (MCH), which performs the carrier and often also shelf management. It also acts as the data switch in the system.

Carrier and shelf management include, among other things, temperature, voltage and air monitoring.

Remote monitoring can be set up via an external Ethernet connection. This allows early detection and remedying of temperature problems. Downtimes are thus reduced.

Applications

Reduced development costs and shorter time-to-market are the advantages of the MicroTCA standard compared to proprietary system solutions, as they can be found increasingly often in telecommunications today.

Among others the advantages over the previous bus systems (VME, CompactPCI busses) are the higher speed, smaller designs and larger flexibility.

MicroTCA is used in areas where faster data transfer rates are required and large data volumes must be processed in the shortest time, e.g. in telecommunications, automation, image processing, medical systems, defence systems etc.

Heat dissipation

MicroTCA defines very high heat dissipation for the AdvancedMC modules.

The maximum heat dissipation for the largest module (double full-size)
is determined as 80 W. Cooling is thus a challenge.

MicroTCA systems from Schroff can reliably dissipate this volume of thermal power loss. Special fans have been purpose-developed and create a particularly high static pressure.

In addition, thermal simulations and
measurements are performed on Schroff MicroTCA systems to optimise the airflow.

Systems – MicroTCA

Overview 8.36

Modular MicroTCA high speed systems

- Very wide product range in terms of dimensions, number of slots, cooling principles, backplane topologies
- Modifications to your requests
- Systems for MicroTCA.0, MicroTCA.1 and MicroTCA.4

PICMG® Open Modular Computing Specifications

12911003

MicroTCA.4 systems for test and measurement applications

- Cube and 19" systems
- For double mid-size AMC modules
- With rear board cage for rear transition modules
- Cooling units with management controller

12912005

MicroTCA.1 systems for industrial applications

- Cube systems
- For double mid-size AdvancedMC modules
- For harsh environmental conditions
- Cooling units with management controller

12908003

MicroTCA.0 systems for communications applications

- Cube and 19" systems
- For single and double AdvancedMC modules
- Cooling units with management controller

12908004

MicroTCA.0 systems for laboratory applications

- Desk-top enclosures with tip-up feet
- Cube and 19" systems
- Cooling units without management controller

30407004

ServicePLUS from page 8.112

e.g. individual configuration and assembly
e.g. modifications (backplanes, power supply)
e.g. ventilation concepts
e.g. custom solutions

www.schroff.biz/ServicePLUS

MicroTCA.4 systems for test and measurement applications
Cube, 5 U, 42 HP, for 7 double modules 8.38
9 U, for 12 double mid-size modules 8.39
7/9 U, for 12 double full-size modules . . . 8.41

MicroTCA.1 systems for industrial applications
Cube, 5 U, 42 HP, for 6 single modules 8.42

MicroTCA.0 systems for communications applications
Cube, 3 U, 30 HP, for 4 single modules 8.43
Mini, 1 U, for 2 single modules . 8.44
1 U, with eMCH for 2 Single AMC-modules . . 8.45
1 U, for 6 single modules 8.46
3 U, for 10 single modules 8.47

MicroTCA.0 case systems for laboratory applications
Cube, 3 U, 30 HP, for 4 single modules 8.48
3 U vertical, for 4 single modules 8.49

Accessories
Splitting kit 8.50
Guide rails 8.51
Power feeder modules 8.52
Power supply systems 8.53
Field replaceable units (FRUs) 8.54

ServicePLUS . . 8.112

MicroTCA.4 system, cube, 5 U, 42 HP, for 7 double AdvancedMC modules

12912001

Front view

12912004

Rear view

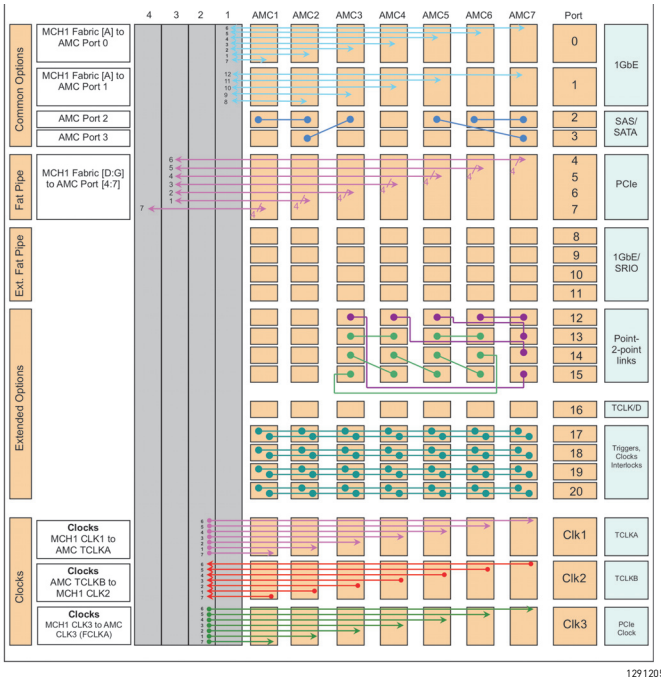

12912052

Backplane topology

- In accordance with PICMG MTCA.4 R1.0 specification
- 5 U, 42 HP cube system for 6 double mid-size and 1 double full-size AdvancedMC modules, 1 double full-size MCH and 1 double full-size power module
- 6 rear transition module slots for double mid-size modules and one slot for double full-size
- Backplane with star topology, direct connections for S-ATA/SAS, clock and trigger lines as per PICMG MTCA.4
- Clock topology to PICMG AMC.0 R2.0
- Hot-swap fan module with cooling unit manager (CU EMMC), airflow from bottom to top, fan speed for front and rear sections can be separately adjusted via MCH
- Air filter, exchangeable from front

Delivery comprises

Item	Qty	Description
1	1	MicroTCA system, 5 U, 42 HP, 373 mm deep, zinc-plated
2	7	AdvancedMC module slot, with guide rail, for vertical board mounting
3	1	Backplane with star topology for 7 AdvancedMC modules, 1 MCH and 1 power module
4	1	Hot-swap fan module with cooling unit manager (CU EMMC) and 6 fans
5	1	Air filter, exchangeable from front

Order Information

Height mm	Height U	Width HP	Depth mm	Number of slots	Part no.
222.25	5	42	373	7	11850-021
Accessories					
AC/DC, double full-size, with power management (PM EMMC) 550 W, 1 piece					**11098-547**
Splitting kit PU 5 pieces					**20849-115**
PFM, single full-size 12 V_{DC} input, 40 A, with PM EMMC, non-redundant, with reverse polarity and overvoltage protection, 1 piece					21596-571
PFM, single full-size 12 V_{DC} input, 80 A, with PM EMMC, non-redundant, without reverse polarity and overvoltage protection, 1 piece					21596-572
Replacement parts (FRUs)					
Fan tray (21850-113)					**Page 8.54**
Air filter (21850-116)					**Page 8.55**

Note

- Modified systems available on request

Systems – MicroTCA

MicroTCA.4 system, 9 U, 84 HP, for 12 double mid-size AdvancedMC modules

12915003

Front view

12915004

Rear view

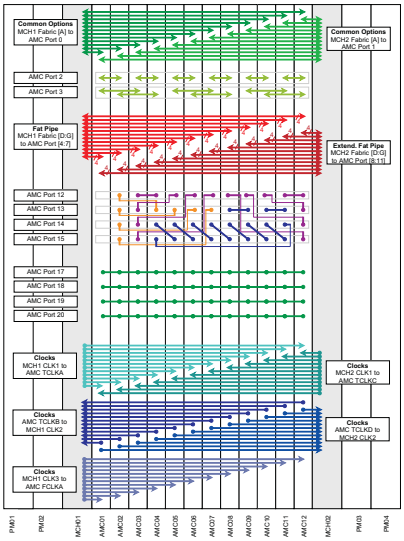

12611050

Backplane topology

- In accordance with PICMG MTCA.4 R1.0 specification
- 9 U, 84 HP system for 12 double mid-size AdvancedMC modules, 2 double full-size MCHs and 4 double full-size power modules
- 12 rear transition module slots for double mid-size RTMs
- Backplane with dual star topology, direct connections for S-ATA/SAS, clock and trigger lines as per PICMG MTCA.4
- Telecom and fabric clock topology as per PICMG AMC.0 R2.0
- 2 hot-swap fan modules with cooling unit manager (CU EMMC) in push/pull configuration, airflow from bottom front to top rear
- Fan speeds for front and rear sections can be separately adjusted via the MCH

Delivery includes

Item	Qty	Description
1	1	MicroTCA system, 9 U, 84 HP, 373 mm deep, zinc-plated
2	12	AdvancedMC module slots, with guide rail, for vertical board mounting
3	12	RTM module slots, with guide rail, for vertical board mounting
4	1	Backplane with dual star topology for 12 AdvancedMC modules, 2 MCHs and 4 power modules
5	2	Hot-swap fan module with cooling unit manager (CU EMMC) and 6 fans
6	1	Air filter, swappable from front

Order Information

Height mm	Height U	Width HP	Depth mm	Number of slots	Part no.
400.05	9	84	373	12	**11850-026**
Accessories					
AC/DC, double full-size, with power management (PM EMMC) 550 W, 1 piece					**11098-547**
Splitting kit PU 5 pieces					**20849-115**
PFM, single full-size 12 V_{DC} input, 40 A, with PM EMMC, non-redundant, with reverse polarity and overvoltage protection, 1 piece					21596-571
PFM, single full-size 12 V_{DC} input, 80 A, with PM EMMC, non-redundant, without reverse polarity and overvoltage protection, 1 piece					21596-572
Replacement parts (FRUs)					
Fan tray (21890-142)					**Page 8.57**
Air filter (21890-143)					**Page 8.55**

Note

- Modified systems available on request

ServicePLUS see page 8.112

PICMG® Open Modular Computing Specifications

MicroTCA.4 system, 9 U, 84 HP, for 12 double mid-size AMCs, White Rabbit, JSM slot

12917001

Front view

12917002

Rear view

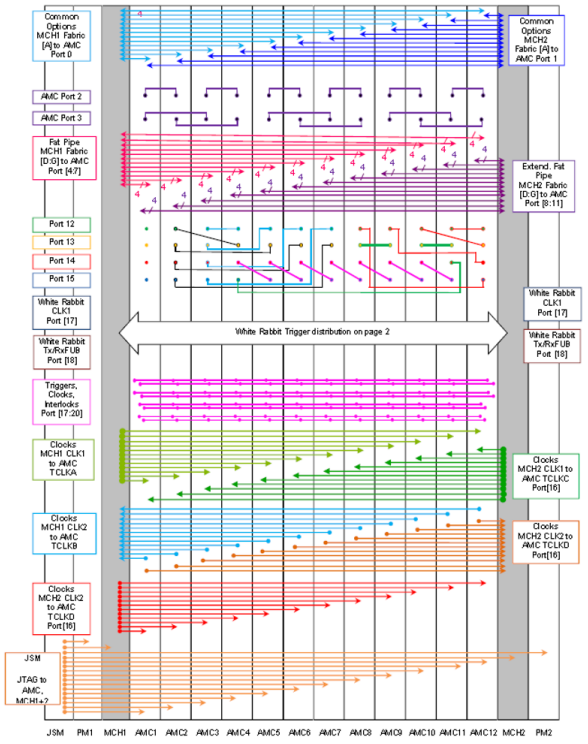

12917050

Backplane topology

- Conforms to PICMG MTCA.4 R1.0 specification
- 9 U, 84 HP system for 12 double mid-size AdvancedMC modules, 2 double full-size MCHs, and 4 double full-size power modules
- 12 rear transition module pin positions for double mid-size RTMs
- Backplane with dual star topology, direct connections for S-ATA / SAS, clock and trigger lines as per PICMG MTCA.4
- Telecom and fabric clock topology as per PICMG AMC.0 R2.0
- Supports White Rabbit synchronization
- 2 hot-swap fan modules with cooling unit manager (CU EMMC), airflow from bottom front to top rear
- Fan speeds for front and rear sections can be separately adjusted via the MCH
- Separate JSM slot

The system is designed for high-performance applications with a high level of availability, where redundancy of all components is required. The two redundant hot-swap fan modules with EMMC in push-pull configuration ensure that the front and rear slots are cooled perfectly. The fan speed is controlled independently for front and rear and is set via the MCH. The separate JSM slot prevents an AMC slot from being occupied by a JTAG module. Cable trays on the front and rear of the enclosure simplify cable management. The system can take up to four power modules to ensure a sufficient power supply for the application. The backplane features clock and trigger lines as per PICMG MTCA.4, as well as interlocks. It also provides direct connections for SAS/SATA and lines between the AMCs, as well as supporting White Rabbit for deterministic Ethernet.

Delivery includes (completely assembled, wired and tested)

Item	Qty.	Description
1	1	MicroTCA system, 9 U, 84 HP, 373 mm deep, zinc-plated
2	12	AdvancedMC module pin position, with guide rail, for vertical board mounting
3	6	RTM module pin position, with guide rail, for vertical board mounting
4	1	Backplane with dual star topology for 12 AdvancedMC modules, 2 MCHs, and 4 power modules
5	2	Hot-swap fan unit with cooling unit manager (CU EMMC) and 6 fans
6	1	Air filter, replaceable from front

Order Information

Width HP	Height U	Depth mm	Number of RTM slots	Number of AMC slots	Number of MCH slots	Number of power slots	Part no.
84	9	373	12	12	2	4	11850-027
Accessories							
AC/DC, double full-size, with power management (PM EMMC) 550 W, 1 piece							**11098-547**

Note

- Modified systems available on request

MicroTCA.4 system, 7 / 9 U, 84 HP, for 12 double full-size AdvancedMC modules

12916001

Front view 9 U

12916005

Front view 7 U

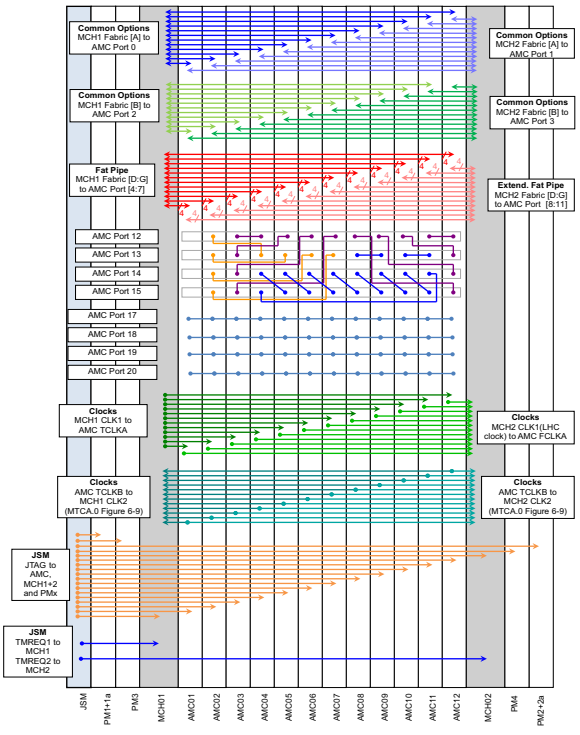

12916050

CMS backplane topology

ServicePLUS siehe Seite 8.112

PICMG® Open Modular Computing Specifications

- Conforms to PICMG MTCA.4 R1.0 specification
- 84 HP system for 12 double full-size AdvancedMC modules, 2 single full-size MCHs, and 4 / 2 single full-size-power modules
- 6 rear transition module slos for double full-size RTMs
- 1 single full-size slot for a JTAG switch module (JSM)
- Backplane with dual-star topology
- 2 hot-swap fan modules with cooling unit manager (CU EMMC)
- Optional fan speeds for front and rear sections can be separately adjusted via the MCH
- Air filter that can be changed on the front
- CMS and/or MTCA.4 backplane topology
- 7 U system with airflow from bottom to top, 9 U system with airflow from front to rear

Delivery includes (completely assembled, wired and tested)

Item	Qty	Description
1	1	MicroTCA system, 7 and/or 9 U, 84 HP, 373.3 mm deep, zinc-plated
2	12	AdvancedMC module slots, double full-size, with guide rail, for vertical board mounting
3	6	RTM module slots, double full-size, with guide rail, for vertical board mounting
4	4/2	Power module slots, single full-size
5	2	MCH slots, single full-size
6	1	JSM module slots, single full-size
7	1	Backplane with dual star topology for 12 AdvancedMC modules, 2 MCHs, 4/2 power modules, 1 JSM
8	2	Hot-swap fan module with cooling unit manager (CU EMMC) and 6 fans
9	1	Air filter, replaceable from front

Order Information

Height U	Width HP	Depth mm	Number of slots	Backplane type	Airflow	Part no.
7	84	373	12	CMS backplane topology	Bottom to top	**11890-119**
7	84	373	12	MTCA.4 backplane topology	Bottom to top	11890-152
9	84	373	12	CMS backplane topology	From front to rear	11890-156
9	84	373	12	MTCA.4 backplane topology	Bottom to top	11890-170

Note

- Modified systems available on request

MicroTCA.1 systems, cube, 5 U, 42 HP, for 6 double AdvancedMC modules

12912005

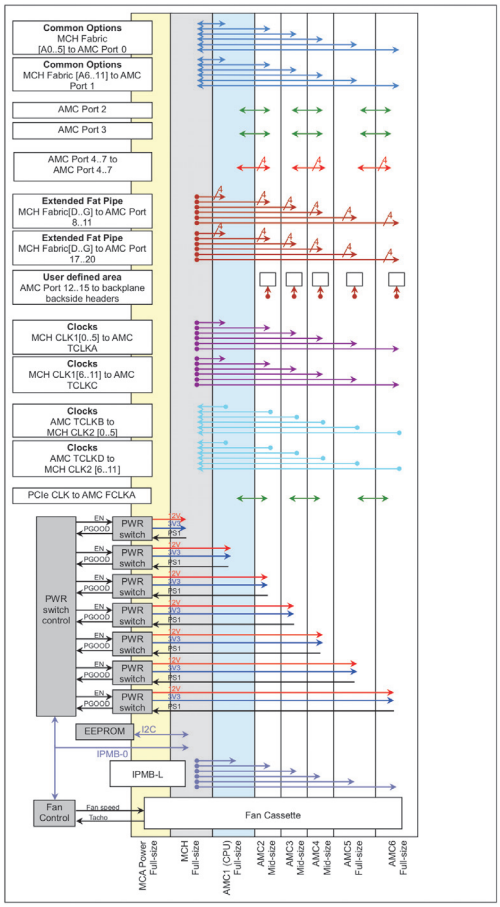

12912051

Backplane topology

- In accordance with PICMG MTCA.1 R1.0 specification
- 5 U, 42 HP cube system for 3 double mid-size, 3 double full-size AdvancedMC modules, 1 double full-size MCH and 1 double full-size PSU slot
- Backplane with star topology, direct connections for S-ATA/SAS
- Clock topology to PICMG AMC.0 R2.0
- Hot-swap fan module with cooling unit manager (CU EMMC), airflow from bottom to top
- Air filter, exchangeable from front
- Pluggable 300 W PSU with AC mains input in double full-size format, MicroTCA power management (PM EMMC) on backplane

Delivery comprises

Item	Qty	Description
1	1	MicroTCA cube, 5 U, 42 HP, 216.5 mm deep, zinc-plated
2	6	AdvancedMC module slot, with guide rail, for vertical board mounting
3	1	Backplane with star topology for 6 AdvancedMC modules, 1 MCH and 1 PSU
4	1	Hot-swap fan module with cooling unit manager (CU EMMC) and 4 fans
5	1	Air filter, exchangeable from front
6	1	Pluggable PSU, 300 W, double full-size format

Order Information

Height mm	Height U	Width HP	Depth mm	Number of slots	Part no.
222.35	5	42	373	6	11850-020
Accessories					
Power module MicroTCA, AC/DC, double full-size, without management 300 W, 1 piece - page 8.53					**11098-392**
Splitting kit PU 5 pieces					**20849-115**
AdvancedMC front panels					**Page 8.60**
AdvancedMC filler panels					**Page 8.64**
Equipment cables					**Page 3.38**
Replacement parts (FRUs)					
Fan tray (21850-114)					**Page 8.57**
Air filter (21850-120)					**Page 8.55**

Note

- Modified systems available on request

ServicePLUS see page 8.112

Systems – MicroTCA

MicroTCA.0 system, cube, 3 U, 30 HP, for 4 single full-size AdvancedMC modules

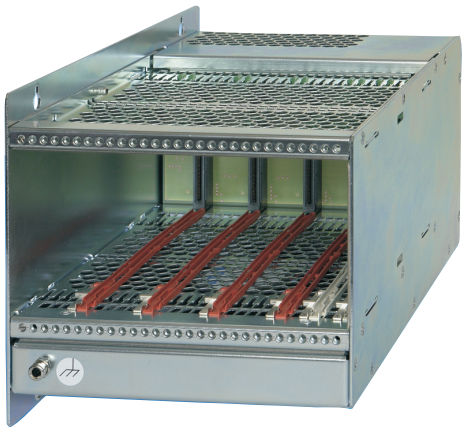

12907009

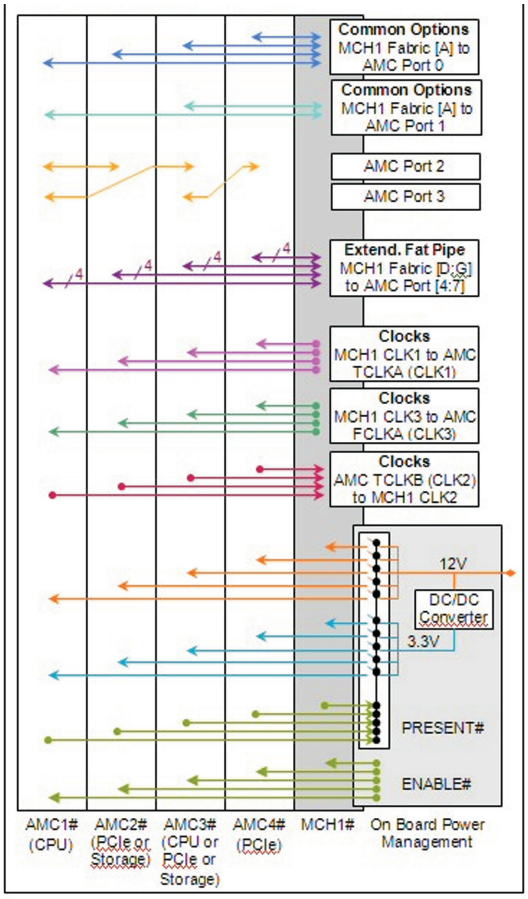

12907053

Backplane topology

ServicePLUS see page 8.112

- In accordance with PICMG MTCA.0 R1.0 specification
- Cube systems for wall mounting
  4 single full-size AdvancedMC modules and 1 single full-size MCH
- Backplane with star topology, direct connections for S-ATA/SAS
- Clock topology to PICMG AMC.0 R2.0
- Power supply via 250 W open-frame PSU, mains supply via IEC plug on rear, switching logic for individual slots on backplane

Delivery comprises

Item	Qty	Description
1	1	MicroTCA system, cube, 3 U, 30 HP, 250 mm deep
2	4	AdvancedMC module slots, with guide rail, for vertical board mounting
3	1	Backplane with star topology for 4 AdvancedMC modules and 1 MCH
4	2	Fan for forced ventilation of slots
5	1	250 W open-frame PSU and IEC mains inlet with switch and fuse; power switching to slots via power management board
6	1	Power management board for 21850-046 and 21850-081

Order Information

Height U	Width HP	Depth mm	Number of slots	Part no.
3	30	250	4	21850-046
Accessories				
AdvancedMC front panels				**Page 8.60**
AdvancedMC filler panels				**Page 8.64**

Note

- Modified systems available on request

AdvancedMC mini system for 2 single AdvancedMC modules

12913001

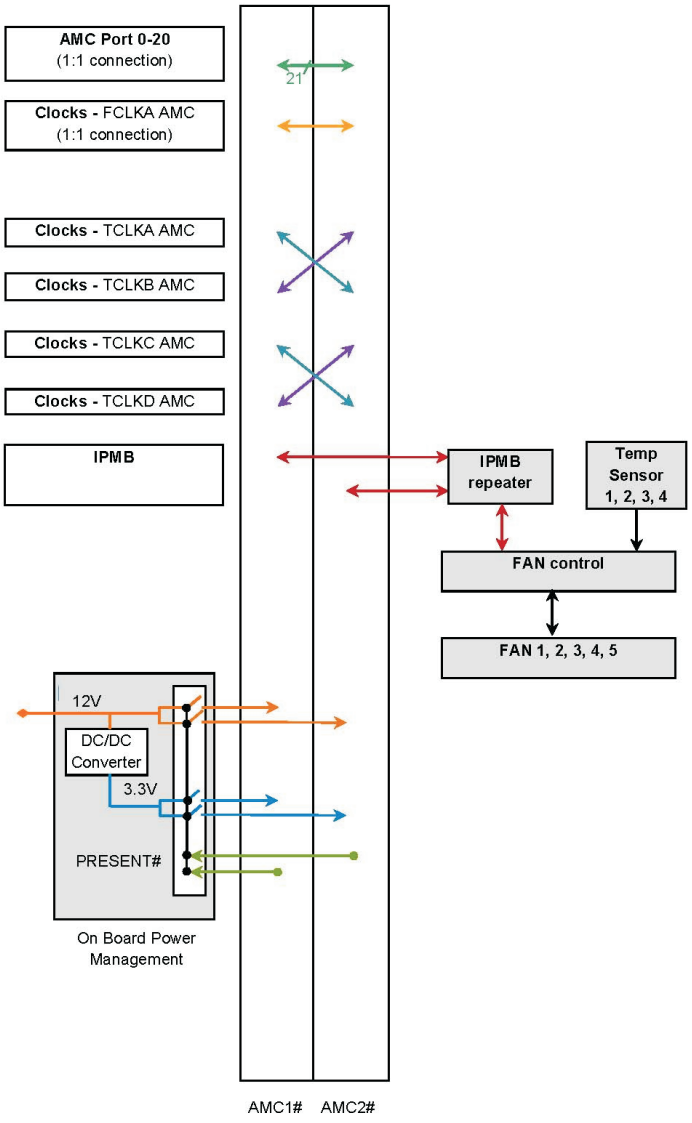

12613050

- Small, compact case to hold 2 single full-size AdvancedMC modules
- 150 W cooling capacity at an ambient temperature of 55 °C, airflow from right to left, temperature-regulated fans
- 90 - 264 V_{AC} wide range input on rear of case, 150 W power supply in rear section of enclosure
- Direct connection of all ports between both AdvancedMC slots (see backplane topology); data transfer rates up to 10 Gbps per port
- The system can be stacked and is prepared for a mounting plate
- Fan unit and fan filter are easy to replace
- 12 V_{DC} voltage is activated by the AdvancedMC module presence signal

Delivery includes ((completely assembled, cabled and tested))

Item	Qty	Description
1	1	Shielded case, St, black RAL 9005, 1 U, 252 mm wide, 302 mm deep, with 2 horizontal slots for single full-size AdvancedMC modules
2	1	Backplane, 2 slot, with fan control and AdvancedMC slot power activation
3	1	AC mains input via 1 IEC 320-C20 AC mains plug, 150 W open frame PSU, 90 ... 264 V_{AC}
4	2	Fan tray, easy to replace
5	1	Air filter, easy to replace
6	4	Rubber feet, included
7	1	Filler module, 2 HP

Order Information

MicroTCA system	Backplane type	Part no.
AdvancedMC mini system for 2 single AdvancedMC modules	Direct connection of ports 0 - 20 and FLCK, cross connects for TCLK A.D	11850-023

Note

- Modified systems available on request

ServicePLUS see page 8.112

PICMG® Open Modular Computing Specifications

Systems – MicroTCA

MicroTCA system with integrated eMCH for 2 single AMC modules

12915010

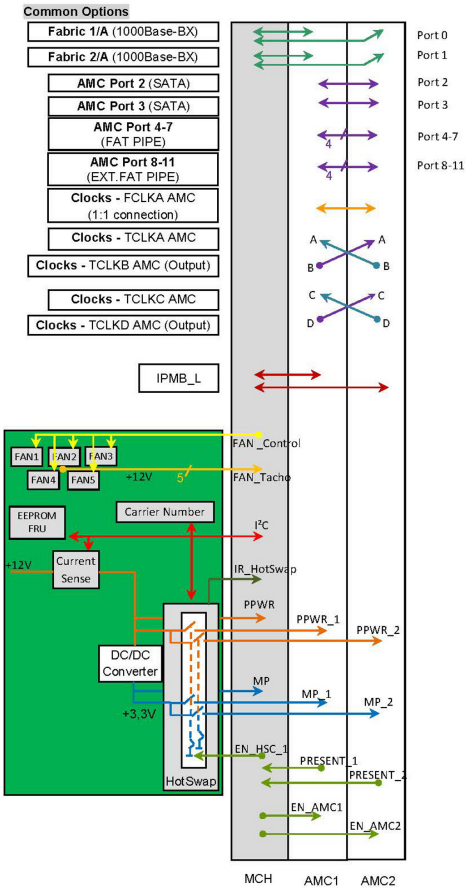

12915050

Topology 23005-491

- Small, compact case to hold 2 single full-size AMC modules. With the integrated 2 HP filler module, 2 single mid-size modules can also be fitted
- Integrated MCH with Ethernet uplink and USB interface
- 2 GbE links from MCH to each of 2 AMC slots
- Direct connection of ports 2 to 11 between both AMC slots (see backplane topology); data transfer rates up to 10 Gbps per port
- 150 W cooling capacity at an ambient temperature of 55 °C, airflow from right to left, temperature-regulated fans
- 90 ... 264 V_{AC} wide voltage range input on rear of case, 150 W PSU in rear section of case
- The system can be stacked and is prepared for a mounting plate
- Fan unit and fan filter are easy to replace

Delivery includes

Item	Qty	Description
1	1	Shielded case, St, black RAL 9005, 1 U, 265 mm wide, 302 mm deep, with 2 horizontal slots for single full-size AdvancedMC modules
2	1	Embedded MCH, installed permanently
3	1	Backplane, 2 slot, with fan control and AdvancedMC slot power activation
4	1	AC mains input via 1 IEC 320-C20 AC mains plug, 150 W open frame PSU, 90 - 264 V_{AC}
5	2	Fan tray, easy to replace
6	1	Air filter, easy to replace
7	4	Rubber feet, included

Order Information

Number of slots	Height U	Width mm	Depth mm	Transmission rate	Backplane type	Part no.
2	1	265	302	10 Gbps/ per port	2x GbE from eMCH for every AMC slot, direct connection of ports 2 - 11	11850-016

Note

- Modified systems available on request

ServicePLUS see page 8.112

MicroTCA.0 system, 1 U, for 6 single mid-size AdvancedMC modules (MTCA.0, Scope)

12915001

Front view (11850-025)

12915002

Rear view (11850-025)

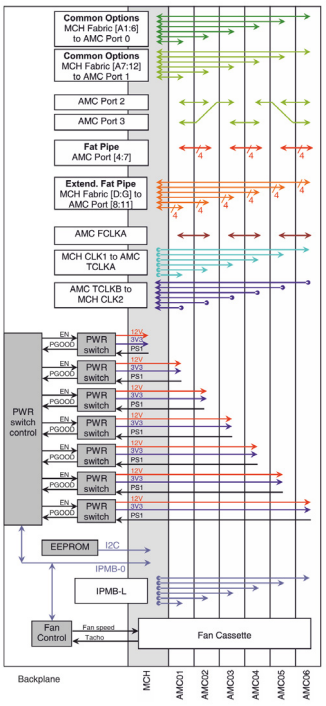

12915006

Backplane topology (11850-024)

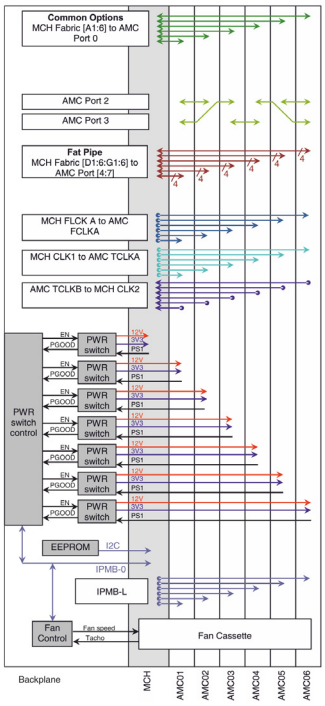

12915007

Backplane topology (11850-025)

- Conforming to PICMG MTCA.0 R1.0 specification
- 1 U, 19" subrack system for 6 single mid-size AdvancedMC modules, 1 single full-size MCH
- AC mains input (100 ... 240 V_{AC}) on rear of case, 400 W PSU built in, power management (PM EMMC) on backplane
- 2 different backplane topologies to MTCA.0 and Scope (see backplane topology)
- Hot-swap fan module with cooling unit manager (CU EMMC), airflow from right to left
- Air filter, swappable from front

Delivery includes

Item	Qty	Description
1	1	MicroTCA system, St, black, RAL 9005, 1 U, 84 HP, 301 mm deep
2	6	Slot for single mid-size AdvancedMC module, with guide rails, for horizontal board mounting
3	1	Slot for single full-size AdvancedMC module, with guide rails, for horizontal board mounting
4	1	Backplane, MTCA.0 or Scope topology, for 6 AdvancedMC modules and 1 MCH
5	1	Hot-swap fan tray with cooling unit manager (CU EMMC) and 5 fans
6	1	Fan tray, replaceable from front
7	1	400 W open frame PSU and power management (PM EMMC) on backplane

Order Information

Height U	Width HP	Depth mm	Number of slots	Trans-mission rate	Topology	Part no.
1	84	301	6	40 Gbps	Scope topology	11850-024
1	84	301	6	40 Gbps	MicroTCA.0 topology	11850-025
Replacement parts (FRUs)						
Fan tray (21850-132)						Page 8.53
Air filter (21850-118)						Page 8.55

Note

- Modified systems available on request

ServicePLUS see page 8.112

PICMG® Open Modular Computing Specifications

Systems – MicroTCA

MicroTCA.0 system, 3 U, 84 HP, for 10 single full-size AdvancedMC modules

12908003

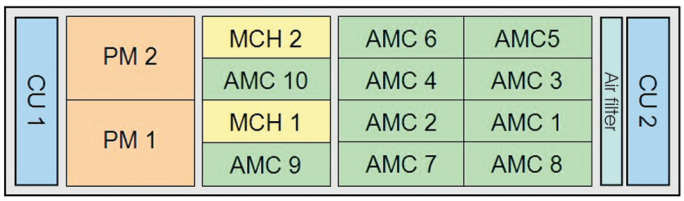

12907050

Slot allocation

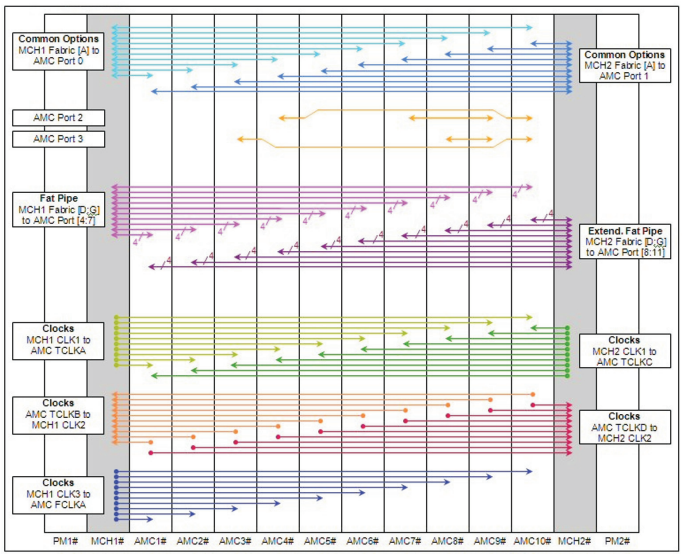

12907051

Backplane topology

ServicePLUS see page 8.112

- In accordance with PICMG MTCA.0 R1.0 specification
- 3 U, 19" subrack system for 10 single full-size AdvancedMC modules, 2 single full-size MCHs and 2 power modules with up to 12 HP width
- Instead of 8 single full-size AdvancedMC modules, the right-hand board cage can be used for 4 double full-size modules
- Backplane with dual star topology, direct connections for S-ATA/SAS
- Clock topology to PICMG AMC.0 R2.0
- Two hot-swap fan modules in push/pull configuration, each with cooling unit manager (CU EMMC), airflow from right to left
- Air filter, exchangeable from front, with presence signal

Delivery comprises

Item	Qty	Description
1	1	MicroTCA system, 3 U, 84 HP, 216 mm deep, powder-coated, black, RAL 9005
2	10	AdvancedMC module slot, with guide rail, for horizontal board mounting
3	1	Backplane with dual-star topology for 10 AdvancedMC modules, 2 MCHs and 2 power modules
4	2	Hot-swap fan unit with cooling unit manager (CU EMMC) and 1 fan;
5	1	Air filter, exchangeable from front
6	4	Splitting kit

Order Information

Height mm	Height U	Width HP	Depth mm	Number of slots	Part no.
133.35	3	84	216	10	11850-011
Accessories					
PFM, single full-size 12 V_{DC} input, 40 A, with PM EMMC, non-redundant, with reverse polarity and overvoltage protection, 1 piece					21596-571
PFM, single full-size 12 V_{DC} input, 80 A, with PM EMMC, non-redundant, without reverse polarity and overvoltage protection, 1 piece					21596-572
AdvancedMC front panels					**Page 8.60**
AdvancedMC filler panels					**Page 8.64**
Replacement parts (FRUs)					
Fan tray (21850-038)					**Page 8.53**
Air filter (21850-034)					**Page 8.55**

Note

- For description of the power supply module see page 8.52
- Replacement parts (FRUs) see from page 8.53
- User manual: Please enter order number at www.schroff.biz/oneclick

MicroTCA.0 case systems, cube, 3 U, 30 HP, for 4 single full-size AdvancedMC modules

12907010

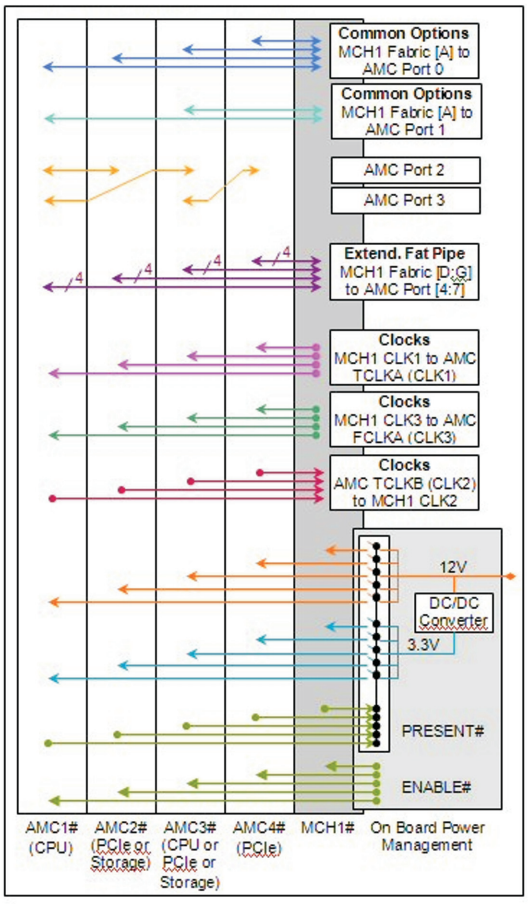

12907053

Backplane topology

- In accordance with PICMG MTCA.0 R1.0 specification
- Cube case system with tip-up feet for 4 single full-size AdvancedMC modules 1 single full-size MCH
- Backplane with star topology, direct connections for S-ATA/SAS
- Clock topology to PICMG AMC.0 R2.0
- Power supply via 250 W open-frame PSU, mains supply via IEC plug on rear, switching logic for individual slots on backplane

Delivery comprises

Item	Qty	Description
1	1	MicroTCA case system with tip-up feet, cube, (ratiopacPRO case)
2	4	AdvancedMC module slot, with guide rail, for vertical board mounting
3	1	Backplane with star topology for 4 AdvancedMC modules and 1 MCH
4	3	Fan for forced ventilation of slots
5	1	250 W open-frame PSU and IEC mains inlet with switch and fuse
6	1	Power management board on 21850-081

Order Information

Description	Height U	Width HP	Depth mm	Number of slots	Part no.
Case system, power switching to slots via presence signal	3	30	316	4	21850-045
Case system, power switching to slots via power management board	3	30	316	4	21850-081
Accessories					
AdvancedMC front panels					**Page 8.60**
AdvancedMC filler panels					**Page 8.64**

Note

- Modified systems available on request

ServicePLUS see page 8.112

Systems – MicroTCA

MicroTCA.0 case system, 3 U, 84 HP, for 4 single AdvancedMC modules

12908004

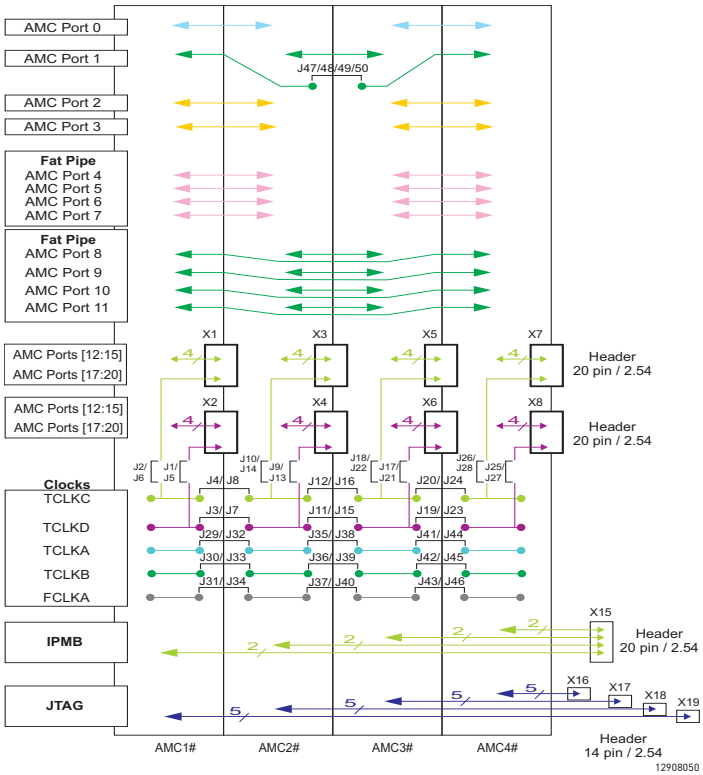

Backplane topology

ServicePLUS see page 8.112

- Evaluation system for AdvancedMC modules
- 19" desktop case system with tip-up feet for 4 single AdvancedMC modules (12 HP)
- Backplane with direct connections and headers on rear of backplane to connect external measuring equipment
- Case top cover and top board cage plate are easily removable (good access to the modules)
- Active heat dissipation, 2 fans (29 m³/h, 17 cfm) per slot
- Power supply via 400 W ATX PSU, mains supply via IEC plug on front

Delivery comprises

Item	Qty	Description
1	1	MicroTCA case system
2	4	AdvancedMC module slot, with guide rail, for vertical board mounting
3	1	Backplane with direct connections for 4 AdvancedMC-modules
4	8	Fan for forced ventilation of slots
5	1	400 W ATX PSU and IEC mains input with switch

Order Information

Height mm	Height U	Width HP	Depth mm	Number of slots	Part no.
132.5	3	84	316	4	11850-013
Accessories					
AdvancedMC front panels					**Page 8.60**
AdvancedMC filler panels					**Page 8.64**

Note

- User manual: Please enter order number at www.schroff.biz/oneclick

Accessories and field replaceable units (FRUs)

Field replaceable unit (FRU) designates system components that can be replaced on site. This reduces system downtime to a minimum. Schroff offers various FRU components for AdvancedTCA systems:

- Splitting kit, see page 8.50
- MicroTCA guide rails, see page 8.51
- Power feed-through modules, see page 8.52
- PSUs (AC/DC, double full-size) with and without management, see from page 8.53
- Fan modules, see from page 8.53
- Air filters, see page 8.55

Splitting kit

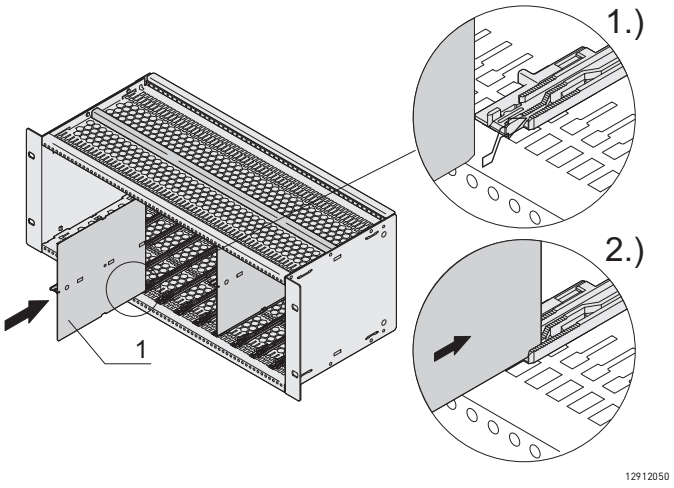

- For fitting 2 single AdvancedMC modules one above the other in one double AdvancedMC slot
- Splitting kit is inserted into the appropriate receptacle of the Schroff MicroTCA guide rail and locks into the appropriate stud of the guide rail
- With the use of the splitting kit, no slots are lost

Delivery comprises

Item	Qty	Description
1	1	Stainless steel, chassis to accommodate a guide rail
2	1	Guide rail, AdvancedMC
3	1	Splitting extrusion, centre
4	1	ESD contact spring
5	1	Fixing material kit, user manual

Order Information

Description	Part no.
Splitting kit, PU 5 pieces	20849-115

Systems – MicroTCA

MicroTCA guide rails

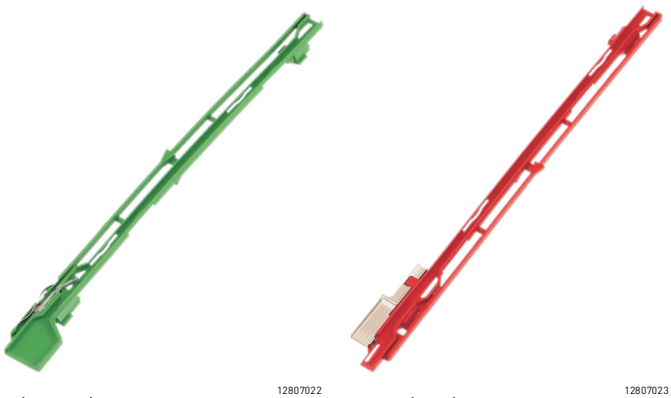

12807022 top (green)

12807023 bottom (red)

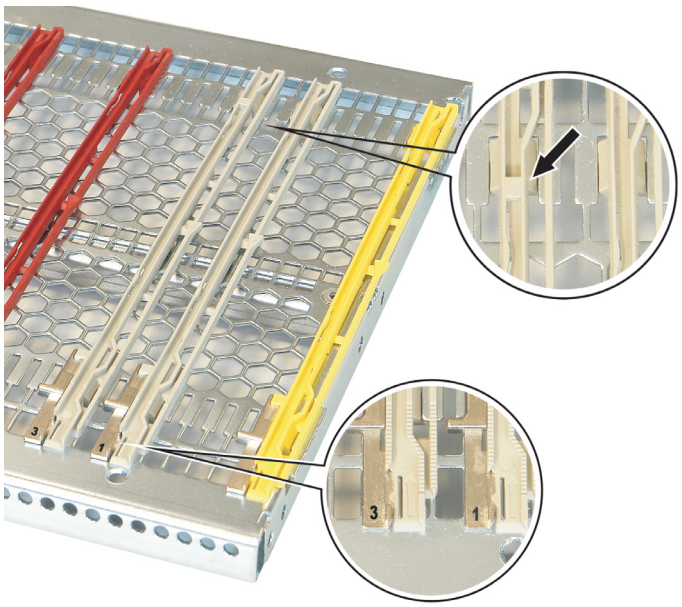

12807011 Guide rails bottom, grey, for guide rails of 6 HP wide (full-size) MicroTCA carrier hubs

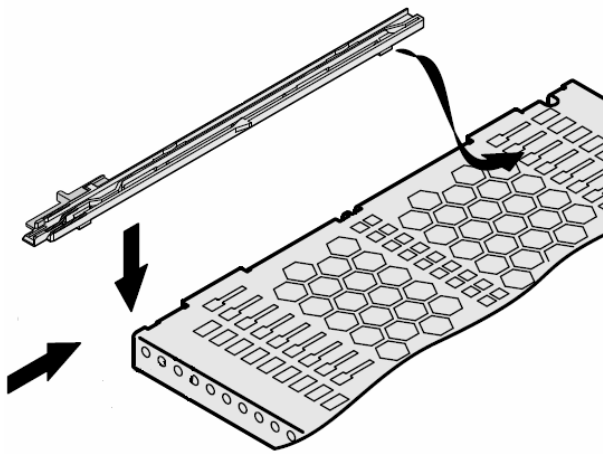

12807059

- Easy installation without tools in 1 HP grid; the minimum distance between two guide rails is 3 HP (compact)

Order Information

Description	Qty/PU	Part no.
Guide rail, top, green, with ESD clip; for all modules	10	**20849-200**
Guide rail, top, green, with ESD clip; for all modules	100	**20849-201**
Guide rail bottom, red; for AdvancedMC function modules	10	**20849-194**
Guide rail bottom, red; for AdvancedMC function modules	100	**20849-195**
Guide rail bottom, yellow; for power supplies	10	**20849-196**
Guide rail bottom, yellow; for power supplies	100	**20849-197**
Guide rail bottom, grey; for left-hand guide rail of a 6 HP wide MicroTCA carrier hub (designation 3)	10	**20849-202**
Guide rail bottom, grey; for right-hand guide rail of a 6 HP wide MicroTCA carrier hub (designation 1)	10	**20849-198**
Guide rail bottom, grey; for right-hand guide rail of a 6 HP wide MicroTCA carrier hub (designation 1)	100	**20849-199**

MicroTCA power feeder modules, single full-size

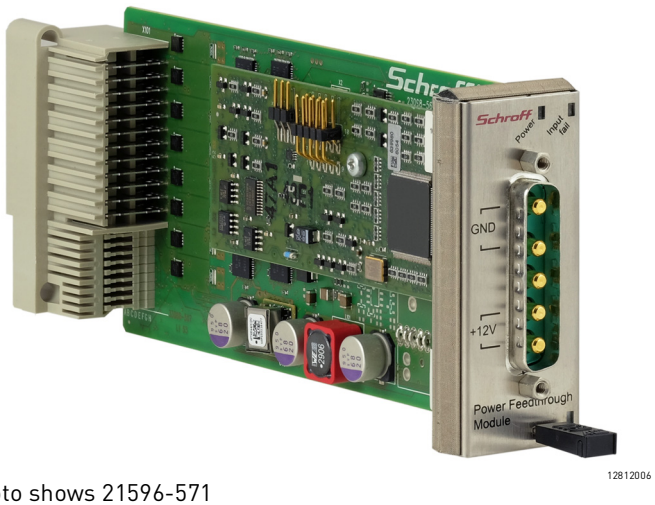

Photo shows 21596-571

- Infeed of +12 V_{DC} supply voltage from an external source via D-Sub plug to 16 x 12 V_{DC} outputs to MicroTCA backplane
- Generation of +3.3 V_{DC} management voltage and distribution to 16 outputs
- Used in the power module slot (single full-size) instead of a MicroTCA power module, plug and form factor compatible
- 2 versions
  - With power management (PM EMMC), with protection against overvoltage and polarity reversal of input voltage, 5-pin D-Sub input plug
  - With power management (PM EMMC), no protection against overvoltage or polarity reversal of input voltage, 5-pin D-Sub input plug

Delivery comprises

Item	Qty	Description
1	1	Power feeder module, single full-size
2	1	Power management mezzanine board

Order Information

MicroTCA power feeder, single full-size	Part no.
With power management with overvoltage protection	21596-571
With power management without overvoltage protection	21596-572
Accessories	
Connection cable for power feeder module, 5-pin D-Sub 5W5 (-48 V_{DC}) on M5 ring terminal, cable length 1.8 m, 1 piece	23204-835

Systems – MicroTCA

AC/DC, double full-size, without management

11309004

Photo shows 11098-392

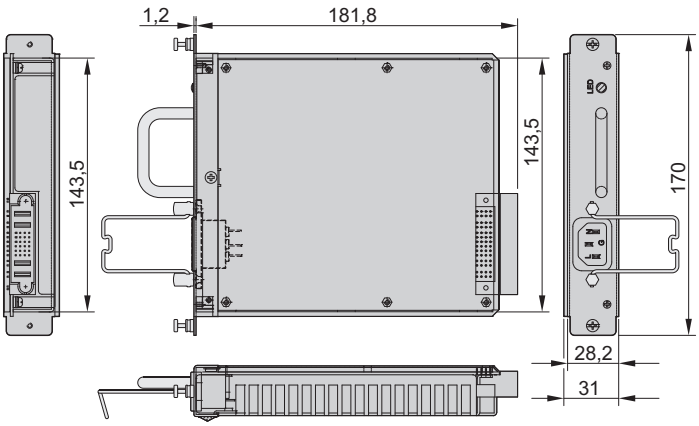

11312050

- Wide input voltage range 90 ... 264 V_{AC}
- Active power factor correction
- Construction compatible with AdvancedMC double full-size
- Single-wire current share cable for redundancy operation
- 2 output voltages, 12 V and 3.3 V
- Corresponds to EMC class B as per EN 55022
- Without MicroTCA power management controller
- Mains input at front

Delivery comprises

Qty	Description
1	PSU for MicroTCA height double (148.3 mm) width full-size (6 HP) depth 186.65 mm connector Molex SSI front panel with handle and EMC gasket (fitted)

Order Information

Voltage V	Current A	Power W	Description	Part no.
V1: 12 V_2: 3.3	I_1: 25 I_2: 3	300	MCA 300 AC	**11098-392**

Note

- Output data for T_A = -25 ... 55 °C with forced cooling of 20 cfm
- Connector FCI 51720-10202402AA or Molex 87631-2019

Fan module for MicroTCA.0 system, 1 U

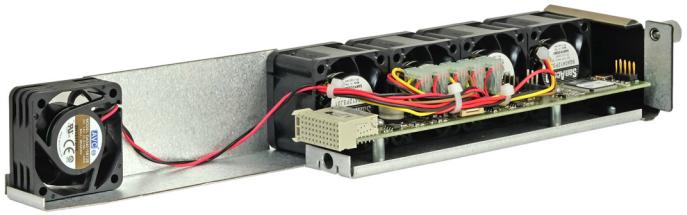

12915008

- For Schroff 1 U MicroTCA system 11850-024 and 11850-025
- With cooling unit enhanced module management controller (CU EMMC)
- Hot-swap fan tray with 4 regulated axial fans (40.2 m³/h each free blowing), 1 unregulated axial fan (17 m³/h), 12 V_{DC}

Order Information

Description	Qty/PU piece	Part no.
Fan module for 1 U MicroTCA.0 system (11850-024, 11850-025)	1	21850-132

Fan module for MicroTCA.0 systems, 3 U, without Telco alarm panel

12907013

- Fan tray with 1 axial fan (225 m^3/h), free blowing, 12 V_{DC}
- With cooling unit enhanced module management controller (CU EMMC)

Order Information

Description	Qty/PU	Part no.
Fan module for 3 U MicroTCA system (11850-003)	1	21850-038

Fan module for MicroTCA.4 cube system, 5 U

12912002

- Hot-swap fan tray with 6 regulated axial fans (109 m³/h each), free blowing, 12 V_{DC}
- With cooling unit enhanced module management controller (CU EMMC); fan speeds for front and rear sections independently adjustable via MCH

Order Information

Description	Qty/PU piece	Part no.
Fan module for 5 U physics cube system (11850-021), 1 piece	1	21850-113

Systems – MicroTCA

Fan module for 5 U MicroTCA.1 cube system, 5 U

12912006

- Hot-swap fan tray with 4 regulated axial fans (109 m³/h each), free blowing, 12 V_{DC}
- With cooling unit enhanced module management controller (CU EMMC)

Order Information

Description	Qty/PU piece	Part no.
Fan module for 5 U cube system (11850-020)	1	21850-114

Fan module for MicroTCA.4 19" systems, 9 U

12915005

- Hot-swap fan tray with 6 regulated axial fans (3 x 290 m³/h each free blowing and 3 x 190 m³/h free blowing), 12 V_{DC}
- With cooling unit enhanced module management controller (CU EMMC); fan speeds for front and rear sections independently adjustable via MCH

Order Information

Description	Qty/PU piece	Part no.
Fan module for 9 U MicroTCA.4 19" systems (11850-026)	1	21890-142

Air filters

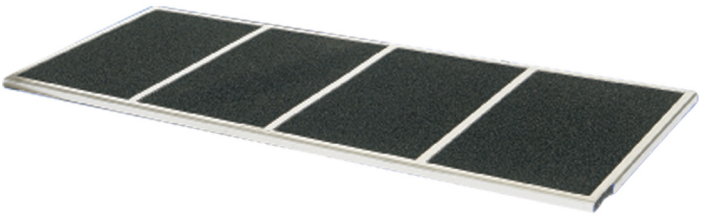

12907005

Photo shows air filter 21850-033

- Material: polyurethane UL 94 HF1
- 45 ppi, 80 % dust reduction under NEBS GR-78 core standard

Order Information

Description	Qty/PU	Part no.
Air filter for 1 U MicroTCA.0 system (11850-024, 11850-025)	1	21850-118
Air filter for 3 U MicroTCA.0 system (11850-003)	1	21850-034
Air filter for 5 U MicroTCA.1 cube system (11850-020)	1	21850-120
Air filter for 5 U MicroTCA.4 cube system (11850-021)	1	21850-116
Air filter for 9 U MicroTCA.4 19" system (11850-026)	1	21890-143

Content

Cabinets 1
Wall mounted cases 2
Accessories for cabinets and wall mounted cases . 3
Climate control . 4
Electronics cases 5
Subracks/ 19" chassis 6
Front panels, plug-in units . . . 7
Systems 8
Power supply units 9
Backplanes . . . 10
Connectors, front panel component system 11
Appendix 12

Systems – AdvancedMC modules

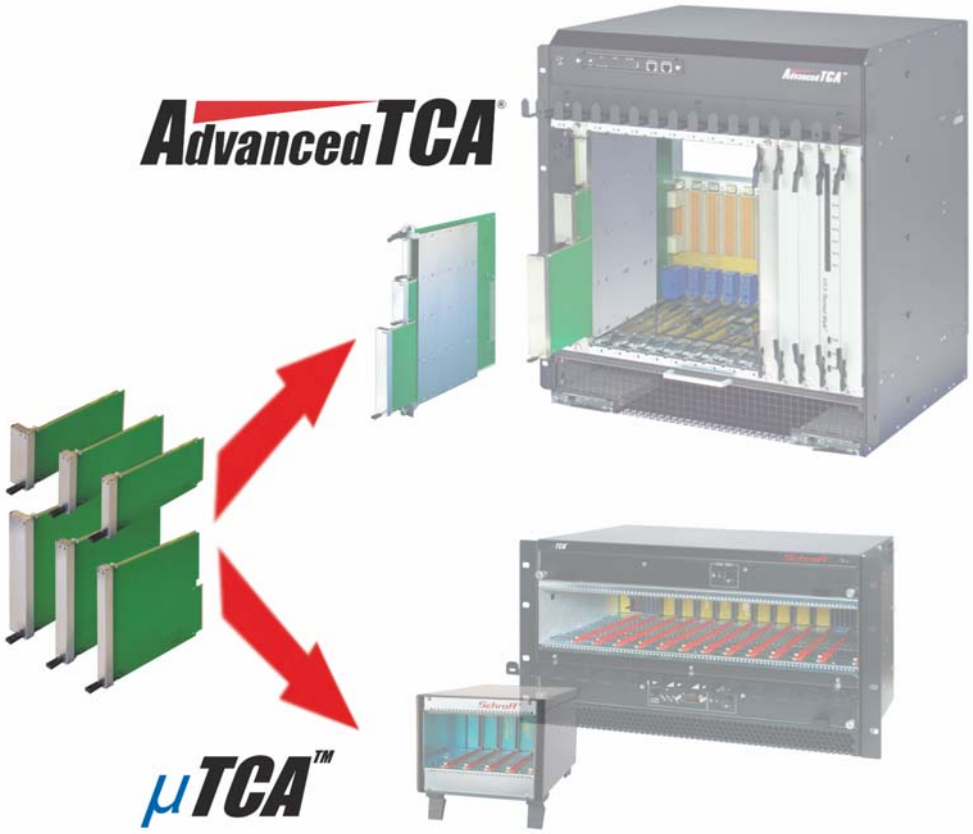

12806029

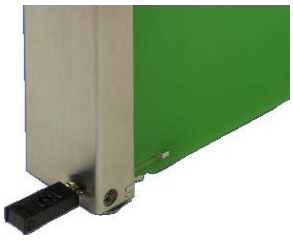

12808006

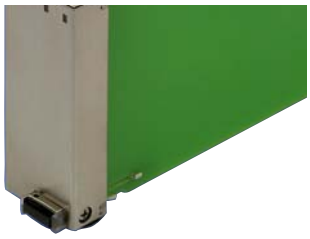

12808007

12808006

Stainless steel

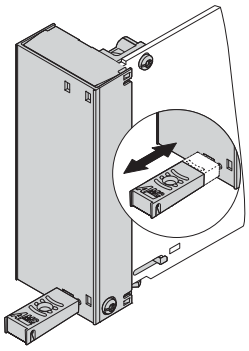

12808060

Pull-handle mechanism

- For compact, mid-size and full-size module widths
- Forward protrusion of handle 20 mm, width 8 mm

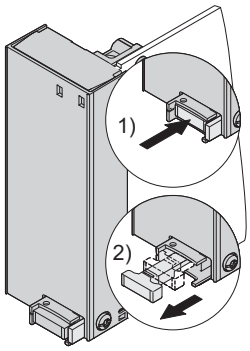

12808059

Push-pull handle mechanism

- For mid-size and full-size module widths
- Forward protrusion of handle 5 mm, width 14 mm

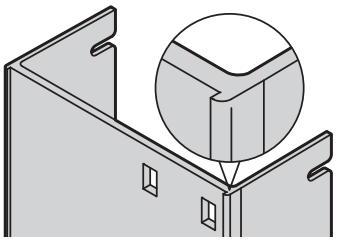

12808056

Aluminium extrusion

AdvancedMC module mechanics

- Front panels with two locking mechanisms, usable for AdvancedMC carriers and MicroTCA systems
- Front panels in steel or aluminium extrusion
- Dimensions
  - Single compact, mid-size, full-size
  - Double compact, mid-size, full-size
- Ruggedized AdvancedMC modules for MicroTCA.1 and MicroTCA.4 applications
- MicroTCA filler modules with adjustable airflow

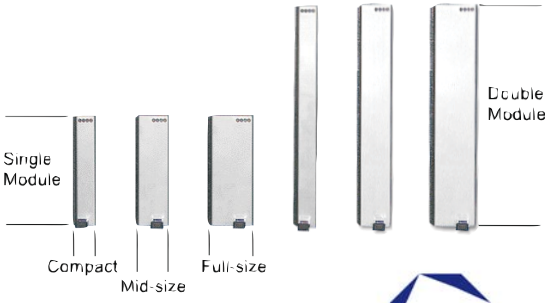

PICMG®
Open Modular Computing Specifications

12808011
Fig. A

12805012
Fig. B

AdvancedMC module mechanics

- For PICMG® AMC.0 R2.0 (Fig. A), locking of modules without screws
- Ruggedized module mechanics for MicroTCA.1 and MicroTCA.4 (Fig. B) applications, with patented screw locking
- EMC shielded front panel in two materials (stainless steel; aluminium)
- Two different handle mechanisms (pull, push-pull)

12808009

AdvancedMC-MicroTCA filler modules

- Front panels with handle, PCB and air baffle for compact, mid-size and full-size AdvancedMC modules
- Air baffles to adjust air resistance of an unused slot
- Air passage adjustable (sliding plates)

30407004

ServicePLUS from page 8.67

e.g. individual configuration and assembly
e.g. modifications (cut-outs, special colours, printing, front films)
e.g. custom solutions (special sizes)

www.schroff.biz/serviceplus/

AdvancedMC module mechanics
PICMG AMC.0 R2.0RC1.2
Modules with push-pull-handle mechanism 8.58
Modules with pull-handle mechanism 8.58
Front panels for module with pull-handle mechanism 8.59
Pull-handle mechanism 8.60
Modules with ruggedized pull-handle mechanism 8.61

Filler modules for MicroTCA
Pull-handle mechanism 8.62
Air baffle for filler module ECO 8.65
Microswitch 8.67

ServicePLUS ... 8.67

Modules with pull-handle mechanism, PICMG® AMC.0 R2.0

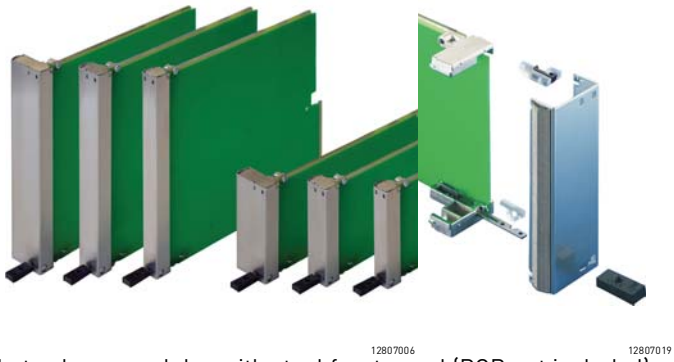

12807006 12807019

Photo shows modules with steel front panel (PCB not included)

- Module in accordance with AdvancedMC standard
- For installation in MicroTCA chassis or AdvancedMC carriers (e.g. conventional, cutaway and hybrid carriers)
- Front panels in 2 versions:
  - Stainless steel
  - Aluminium extrusion; for foil printing

Delivery comprises (kit)

Item	Qty	Description
1	1	U-shaped front panel, stainless steel or Al extrusion
2	1	Accepts light pipe and board bracket at top, Zn die-cast, nickel-plated
3a	1	Light pipe, top, PC, UL 94 V-0
3b	1	Light pipe, bottom, PC, UL 94 V-0
4	1	Pull-handle mechanism with microswitch activation and board bracket
5+6	1	Pull-handle, PC, UL 94 V-0, black
7	1	Lateral EMC gasket, core: foam, sleeve: textile cladding with CuNi coating
8	1	Lower EMC gasket, core: foam, sleeve: textile cladding with CuNi coating
9	1	Assembly kit

Pull-handle mechanism

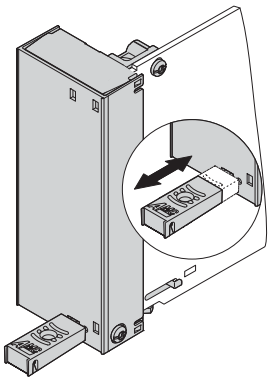

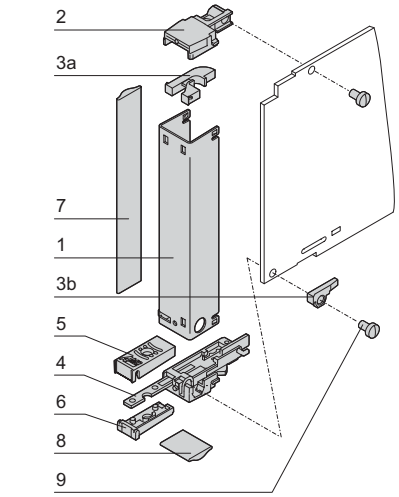

12808060 12806059

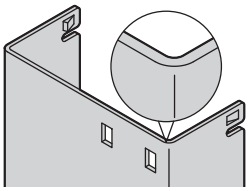

Stainless steel

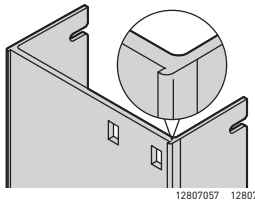

12807057 12807056

Aluminium extrusion

Order Information

Module with pull-handle mechanism, PICMG® AMC.0 R2.0	H mm	h mm	Part no. Aluminium	Part no. Stainless steel
Single compact, 3 HP	73.8	60.8	20849-312	**20849-127**
Single mid-size, 4 HP	73.8	60.8	**20849-268**	**20849-128**
Single full-size, 6 HP	73.8	60.8	**20849-270**	**20849-129**
Double compact, 3 HP	148.8	135.8	20849-313	**20849-130**
Double mid-size, 4 HP	148.8	135.8	**20849-269**	**20849-131**
Double full-size, 6 HP	148.8	135.8	**20849-271**	**20849-132**
Accessories				
Microswitch for AdvancedMC modules "normally open" for soldering (SMD), PU 10 pieces - page 8.67				**20849-209**
Filler Modules				**Seite 8.62**
Air baffle modules				**Seite 8.62**

Note

- Mechanism with pull-handle mechanism see page 8.60
- Schroff offers extensive modification options with the Front Panel Service, including customised cut-outs, foils and silk-screen printing, www.frontpanelexpress.eu

FRONT PANEL EXPRESS

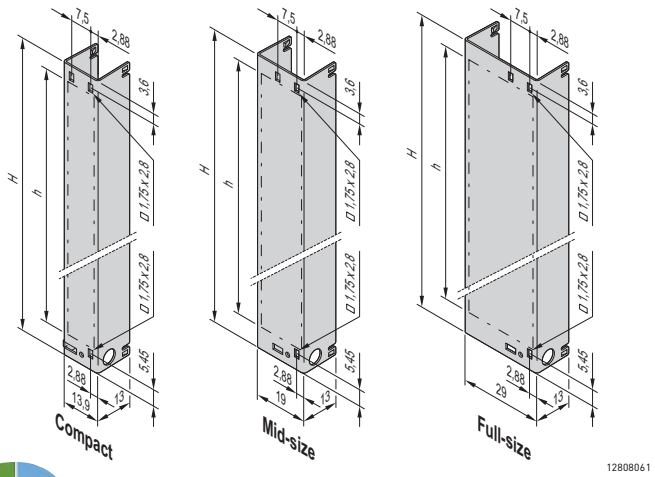

12808061

ServicePLUS see page 8.67

Front panels for module with pull-handle mechanism, PICMG® AMC.0 R2.0

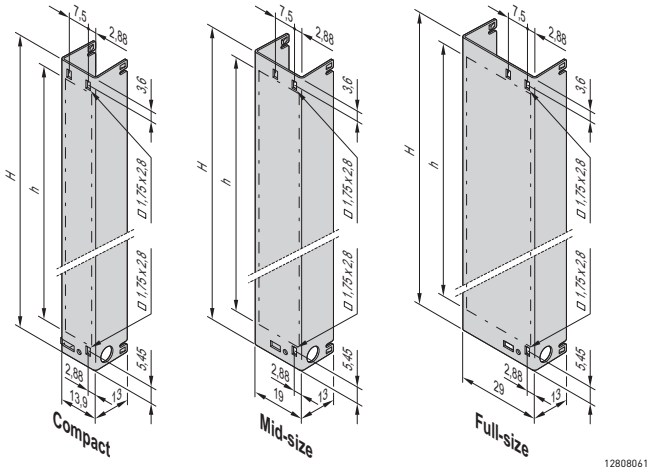

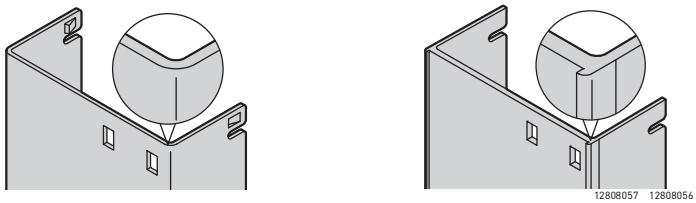

Stainless steel

Aluminium extrusion

- Front panel for pull-handle mechanism (with cut-outs for light pipe)
- For AdvancedMC modules
- 2 front panel materials:
  - Stainless steel
  - Aluminium extrusion; for foil printing

Delivery comprises

Item	Qty	Description
1	1	U-shaped front panel

Order Information

Front panel for module with pull-handle mechanism, PICMG® AMC.0 R2.0	Part no. Aluminium	Part no. Stainless steel
Single compact, 3 HP	**30849-708**	**30849-402**
Single mid-size, 4 HP	**30849-658**	**30849-403**
Single full-size, 6 HP	**30849-682**	**30849-404**
Double compact, 3 HP	**30849-714**	**30849-405**
Double mid-size, 4 HP	**30849-670**	**30849-406**
Double full-size, 6 HP	**30849-694**	**30849-407**

Note

- Locking mechanism for front panel see page 8.60
- Schroff offers extensive modification options with the Front Panel Service, including customised cut-outs, foils and silk-screen printing, www.frontpanelexpress.eu

FRONT PANEL EXPRESS

Pull-handle mechanism, PICMG® AMC.0 R2.0

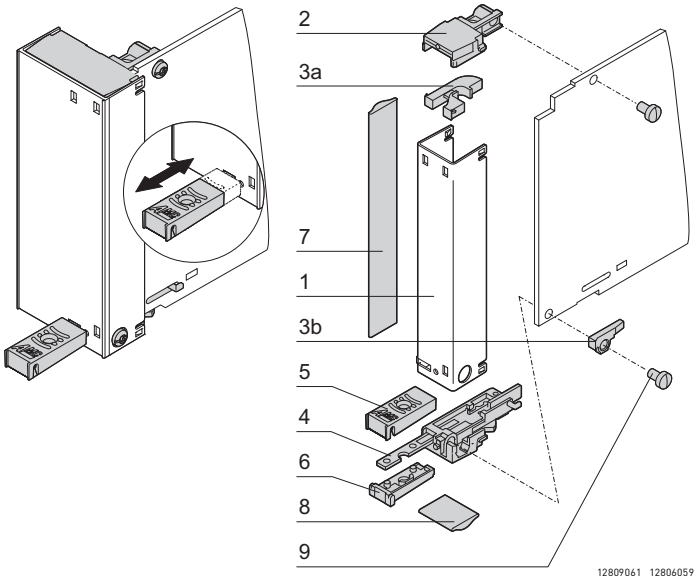

Pull-handle mechanism

- Complete pull-handle mechanism, designed for microswitch activation (hot-swap), includes light pipe
- For AdvancedMC modules

Delivery comprises (kit)

Item	Qty	Description
2	1	Accepts light pipe and board bracket at top, Zn die-cast, nickel-plated
3a	1	Light pipe, top, PC, UL 94 V-0
3b	1	Light pipe, bottom, PC, UL 94 V-0
4	1	Pull-handle mechanism with microswitch activation and board bracket
5+6	1	Pull-handle, PC, UL 94 V-0, black
7	1	Lateral EMC gasket, core: foam, sleeve: textile cladding with CuNi coating
8	1	Lower EMC gasket, core: foam, sleeve: textile cladding with CuNi coating
9	1	Assembly kit

Order Information

Pull-handle mechanism, PICMG® AMC.0 R2.0	Part no.
For single compact, 3 HP	**20849-151**
For single mid-size, 4 HP	**20849-152**
For single full-size, 6 HP	**20849-153**
For double compact, 3 HP	**20849-154**
For double mid-size, 4 HP	**20849-155**
For double full-size, 6 HP	**20849-156**

- Front panel for pull-handle mechanism page 8.59

Systems – AdvancedMC modules

Modules with ruggedized pull-handle mechanism (MicroTCA.1 or MicroTCA.4), shielded

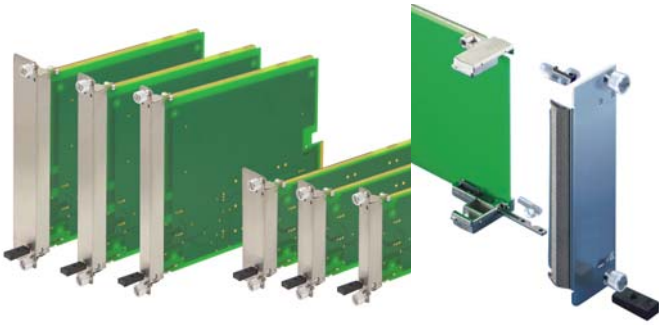

12808015 12805012

- Module in accordance with AdvancedMC standard
- Modules conform to:
  - PICMG® AMC.0 R2.0
  - Ruggedized: MicroTCA.1, MicroTCA.4
- Mounts in MicroTCA chassis or AdvancedMC carrier (e.g. cutaway, conventional or hybrid carrier)
- Stainless steel front panel
- Additional securing of components in MicroTCA system; with patented screw locking

Delivery comprises (kit)

Item	Qty	Description
1	1	U-shaped front panel, stainless steel; with welded-on screw locking, Torx T10
2	1	Board support, die-cast zinc, nickel-plated
3a	1	Light pipe, top, PC, UL 94 V-0
3b	1	Light pipe, bottom, PC, UL 94 V-0
4	1	Pull-handle mechanism with microswitch activation and board bracket
5+6	1	Pull-handle, PC, UL 94 V-0, black
7	1	Lateral EMC gasket, core: foam, sleeve: textile cladding with CuNi coating
8	1	Lower EMC gasket, core: foam, sleeve: textile cladding with CuNi coating
9	1	Assembly kit

Pull-handle mechanism with additional screw locking

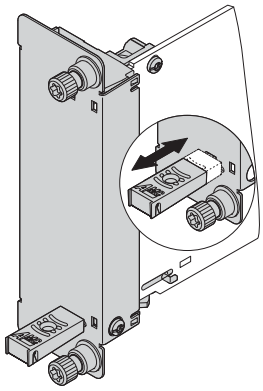

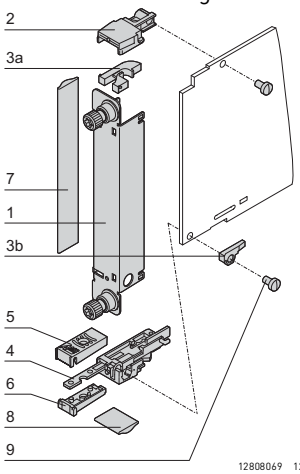

12808069 12808071

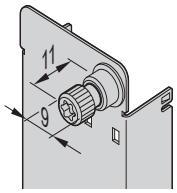

Steel, stainless

12808072 12809001

Screw locking

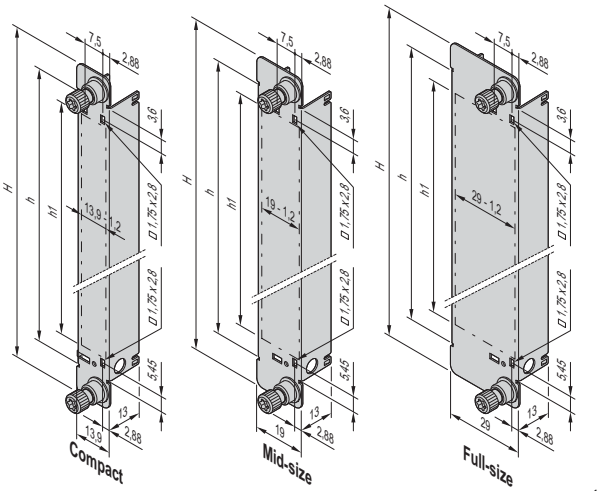

12808070

Order Information

Module with ruggedized pull-handle mechanism	H mm	h mm	h1 mm	Part no.
Single compact, 3 HP	95.0	73.8	60.8	**21850-066**
Single mid-size, 4 HP	95.0	73.8	60.8	**21850-067**
Single full-size, 6 HP	95.0	73.8	60.8	**21850-068**
Double compact, 3 HP	170.0	148.8	135.8	**21850-069**
Double mid-size, 4 HP	170.0	148.8	135.8	**21850-070**
Double full-size, 6 HP	170.0	148.8	135.8	**21850-071**
Accessories				
Microswitch for AdvancedMC modules "normally open" for soldering (SMD), PU 10 pieces - page 8.67				**20849-209**
Individual components				
Screw locking (patented) for ruggedized front panel Screw retainer must be welded to front panel (screw, expansion bolt, bushing; fitted), PU 10 pieces				**21850-057**

Note

- Filler modules MicroTCA.1 and MicroTCA.4 see from page 8.63
- Schroff offers extensive modification options with the Front Panel Service, including customised cut-outs, foils and silk-screen printing, www.frontpanelexpress.eu

FRONT PANEL EXPRESS

ServicePLUS see page 8.67

Filler modules with pull-handle mechanism

12807012

Filler module ECO, single, with air baffle

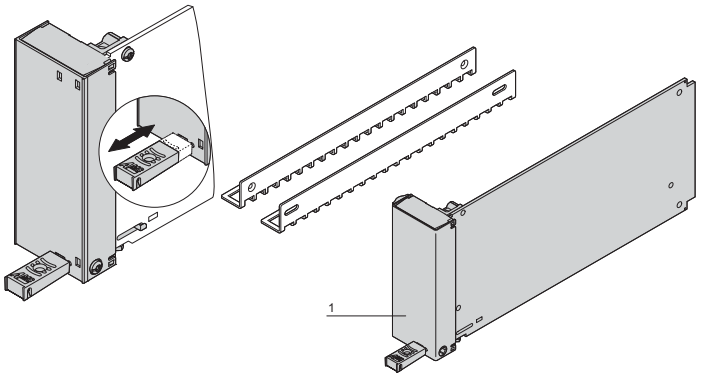

12808060 12805050

Pull-handle mechanism

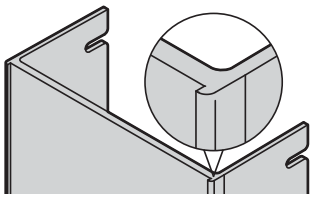

12808068

Aluminium extrusion

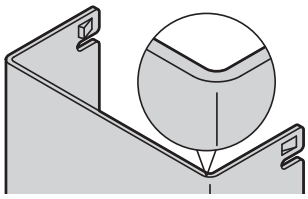

12808067

Stainless steel

- Shielded filler modules are used to close unused slots
- The optional air baffle (airflow adjustable) can be used to prevent an air short-circuit
- For conventional, cutaway and hybrid carrier
- Pull-handle mechanism meets AdvancedMC standard; pull handle to extract sub-assembly
- 2 front panel materials:
  - Stainless steel
  - Aluminium extrusion; for foil labelling

Delivery comprises (assembled)

Item	Qty	Description
1	**1**	**AdvancedMC filler module, consisting of**
	1	U-shaped front panel, stainless steel or Al extrusion
	1	Board support, die-cast zinc, nickel-plated
	1	PCB
	1	Pull-handle mechanism and board bracket
	1	Pull-handle, plastic, PC, UL 94 V-0, black
	1	Lateral EMC gasket, core: foam, sleeve: textile cladding with CuNi coating
	1	Lower EMC gasket, core: foam, sleeve: textile cladding with CuNi coating

Order Information

Filler module with pull-handle mechanism	Part no. Aluminium	Part no. Stainless steel
Single compact, 3 HP	**20849-304**	**20849-022**
Single mid-size, 4 HP	**20849-248**	**20849-106**
Single full-size, 6 HP	**20849-250**	**20849-024**
Double compact, 3 HP	**20849-305**	**20849-023**
Double mid-size, 4 HP	**20849-249**	**20849-107**
Double full-size, 6 HP	**20849-251**	**20849-025**

Note

- Please order air baffle separately, see page 8.62
- Low-cost alternative: Filler module with fixed handle, see page 8.65

Air baffle for AdvancedMC filler modules

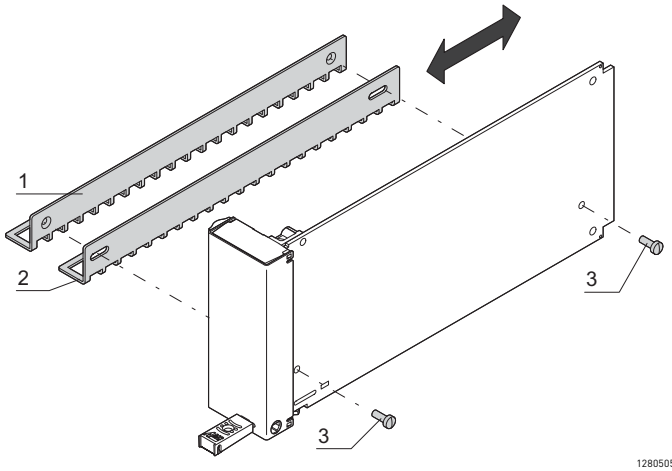

12805051

- Retrofittable

Delivery comprises

Item	Qty	Description
1	1	Metal sheet with perforation, Al
2	1	Sliding metal sheet with perforation, Al
3	1	Assembly kit

Order Information

Description	Qty/PU	Part no.
Air baffle for compact filler module	10	20849-016
Air baffle for mid-size filler module	10	**20849-017**
Air baffle for full-size filler module	10	**20849-018**

Systems – AdvancedMC modules

MicroTCA filler modules with air baffle

12812001

Photo shows mid-size double module

- In accordance with MicroTCA.1 and MicroTCA.4 specifications
- With air baffle
- Shielded filler modules are used to close unused slots and together with the air baffle plates prevent air short circuits occurring through unused slots
- Can be screwed on; is inserted into the guide rail
- Mit Befestigungsschrauben zum Anschrauben an den Kartenkorb
- Mit Luftschottblech
- Wird verwendet um einen leeren Slot zu verschließen

Delivery comprises (assembled)

Item	Qty	Description
1	1	Front panel with side panel and air baffle, stainless steel, 1 mm; with captive screws (2 pieces)
2	1	Lateral EMC gasket, core: foam, sleeve: textile cladding with CuNi coating

Order Information

Description	Part no.
MicroTCA filler module with air baffle, mid-size single	21850-104
MicroTCA filler module with air baffle, full-size single	21850-105
MicroTCA filler module with air baffle, mid-size double	21850-106
MicroTCA filler module with air baffle, full-size double	21850-107

Note

- CAD data: Please enter part no. at www.schroff.biz/oneclick

MicroTCA filler modules (above an MCH)

12812003

Photo shows full-size single module

- In accordance with MicroTCA.1 and MicroTCA.4 specifications
- Filler module is fitted above an MCH or PM when double modules are used
- Shielded filler modules are used to close unused slots
- Can be screwed on; is supported on the guide rail
- Mit Befestigungsschraube zum Anschrauben an den Kartenkorb
- Wird verwendet um die Lücke zu schließen, wenn eine Single Mid-size Karte mit Splitting Kit in einen Double Mid-size Slot eingesetzt wird

Delivery comprises

Item	Qty	Description
1	1	Front panel, stainless steel, 1 mm; with captive screw (1 piece)
2	1	Lateral EMC gasket, core: foam, sleeve: textile cladding with CuNi coating

Order Information

Description	Part no.
MicroTCA filler module with front panel, mid-size single	21850-102
MicroTCA filler module with front panel, mid-size double	21850-103

Note

- CAD data: Please enter part no. at www.schroff.biz/oneclick

MicroTCA filler modules, 2 HP

12807014

Photo shows AdvancedMC-Filler Modul, Single

- In accordance with MicroTCA.1 and MicroTCA.4 specifications
- Shielded filler modules are required e.g. if a mid-size or full-size AdvancedMC module is fitted in a 84 HP system
- Can be screwed on
- Mit Befestigungslöchern zum Anschrauben an den Kartenkorb
- Wird verwendet um die Lücke zu schließen, wenn ein Mid-size Modul in einen Full-size Slot eingesetzt wird

Delivery comprises

Item	Qty	Description
1	1	Front panel, stainless steel, 0.6 mm
2	1	Lateral EMC gasket, core: foam, sleeve: textile cladding with CuNi coating

Order Information

Description	Qty	Part no.
MicroTCA filler module, single, 2 HP	1 piece (SPQ 5)	**20849-213**
MicroTCA filler module, double, 2 HP	1 piece (SPQ 5)	**20849-214**

Delivery is exclusively made in Standard Pack Quantity (SPQ): Please order at least 5 pieces or a multiple. Pricing is per individual item.

Accessories	
Pozidrive panhead screw M3 x 6, zinc-plated, 100 pieces	**21102-024**

RTM filler modules with air baffle

12812002

Photo shows full-size double module

- In accordance with MicroTCA.1 and MicroTCA.4 specifications
- Filler Modul zum Abdecken leerer Slots
- Shielded rear transition (RTM) filler modules are used to close unused slots and together with the air baffle plates prevent air short circuits occurring through unused slots
- Can be screwed on; is inserted into the guide rail
- Mit Befestigungsschrauben zum Anschrauben an den Kartenkorb
- With air baffle
- Wird verwendet um einen leeren RTM (Rear Transition Module) Slot zu verschließen, wenn keine RF Backplane eingebaut ist

Delivery comprises (assembled)

Item	Qty	Description
1	1	Front panel with side panel and air baffle, stainless steel, 1 mm; with captive screws (2 pieces)
2	1	Lateral EMC gasket, core: foam, sleeve: textile cladding with CuNi coating

Order Information

Description	Part no.
RTM filler module with air baffle, mid-size double	21850-108
RTM filler module with air baffle, full-size double	21850-109
MicroTCA RTM-Filler Modul mit Flansch und Luftschottblech, Double Mid-size (RF BP)	21850-130
MicroTCA RTM-Filler Modul mit Flansch und Luftschottblech, Double Full-size (RF BP)	21850-131
MicroTCA RTM-Filler Modul mit Flansch und Luftschottblech, Double Full-size (RF BP, Zone 3)	21850-129

Systems – AdvancedMC modules

Filler module ECO with fixed handle

12809002

Filler module ECO, single, with air baffle

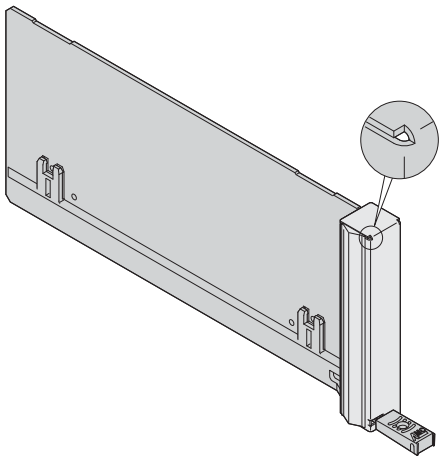

12809052

Single compact module

- Shielded filler modules are used to close unused slots
- The optional air baffle (airflow adjustable) can be used to prevent an air short-circuit
- For conventional, cutaway and hybrid carriers and MicroTCA systems
- Low-cost filler module (no pull- or push-pull-handle mechanism)

NEW

Delivery comprises (assembled)

Item	Qty	Description
1	**1**	**AdvancedMC ECO filler module, consisting of**
	1	Front panel, stainless steel
	1	PCB, plastic, PC, UL 94 V-0 with built-in air baffle holder
	1	Handle, fixed, plastic, PC, UL 94 V-0, black
	1	Lateral EMC gasket, core: foam, sleeve: textile cladding with CuNi coating
	1	Lower EMC gasket, core: foam, sleeve: textile cladding with CuNi coating

Order Information

	Part no.
Single compact, 3 HP	**20849-348**
Single mid-size, 4 HP	**20849-350**
Single full-size, 6 HP	**20849-352**
Double compact, 3 HP	20849-349
Double mid-size, 4 HP	**20849-351**
Double full-size, 6 HP	**20849-353**

Note

- Microswitch cannot be used
- Please order air baffle separately
- Filler modules with handle mechanism (pull- or push-pull-handles) see from page 8.62

Air baffle for filler module ECO with fixed handle

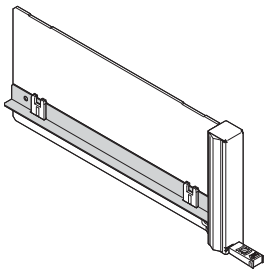

12809050

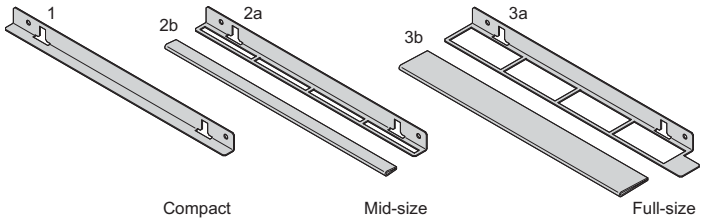

12809051

- Retrofittable; simply clip onto the PCB of the filler module
- To adjust the airflow volume the plastic cover can be individually cut to size (not for compact modules)

NEW

Order Information

Air baffle for filler modules ECO with fixed handle		Part no.
For compact filler module, PU 10 pieces	Item 1: VA plate	20849-355
For mid-size filler module, PU 10 pieces	Item 2a: VA plate with ventilation slots; Item 2b: plastic cover, PVC, UL 94 V-0	20849-356
For full-size filler module, PU 10 pieces	Item 3a: VA plate with ventilation slots; Item 3b: plastic cover, PVC, UL 94 V-0	20849-357

Module cover for MTCA.4 front and RTM modules

12815001

Illustration shows MTCA.4 AdvancedMC module with MTCA.4 cover

12815002

Illustration shows MTCA.4 AdvancedMC RTM module with MTCA.4 cover

12815003

Illustration shows MTCA.4 AdvancedMC front and RTM module with MTCA.4 cover

- To protect the sensitive electronics
- Protects both mounting sides
- Stainless steel

Delivery includes

Item	Qty	Description
1	1	Cover for mounting side 1, stainless steel
2	1	Cover for mounting side 2, stainless steel
3	1	Fixing materials kit

Order Information

Description	Part no.
Module cover for MTCA.4 front modules, double mid-size	21850-133
Module cover for MTCA.4 RTM modules, double mid-size	21850-134

Note

- Double full-size modules available on request

Systems – AdvancedMC-modules ServicePLUS

Microswitch for AdvancedMC modules

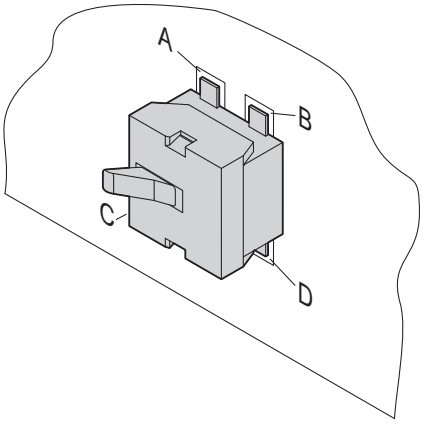

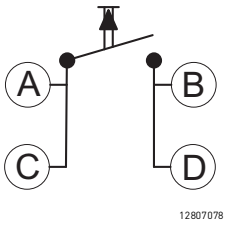

- Microswitch for soldering (SMD)

Order Information

Description	Qty/PU	Part no.
Microswitch for AdvancedMC modules "normally open"	10	**20849-209**

Technical data

Max. switch current	1 mA, 5 V_{DC}
Operating temperature	-15 °C ... +70 °C
Electrical lifespan	10^5 switching cycles

Microswitch "normally open"

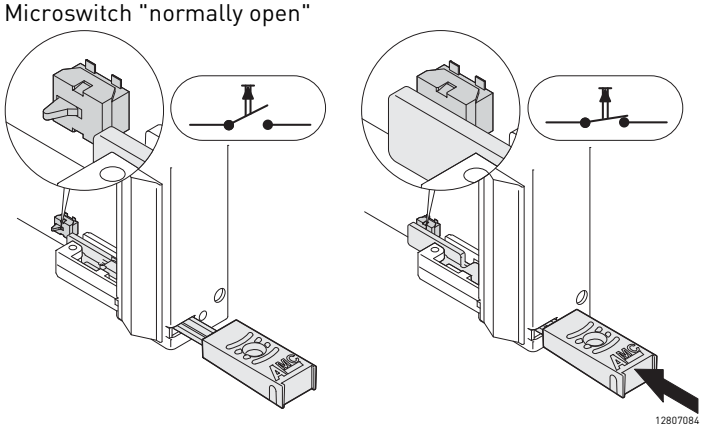

modification

Custom drillings, cut-outs and special colours for off-the-shelf products

Small changes. Large impact.

- Mechanical modifications
- Ready for despatch within 10 working days

solution

Integration and custom developments

Simple. Fast. From one source.

- Customised complete solutions

- Schroff offers extensive modification options with the Front Panel Service, including customised cut-outs, foils and silk-screen printing, www.frontpanelexpress.eu

FRONT PANEL EXPRESS

Content

Cabinets 1
Wall mounted cases 2
Accessories for cabinets and wall mounted cases . 3
Climate control . 4
Electronics cases 5
Subracks/ 19" chassis 6
Front panels, plug-in units . . . 7
Systems 8
Power supply units 9
Backplanes . . . 10
Connectors, front panel component system 11
Appendix 12

Systems – CompactPCI subrack systems

12306002

What we understand to be a system

We at Schroff regard a system as being a combination of mechanical components like a subrack or case with electronic components such as a backplane and power supply unit, a cooling unit where appropriate and a system management module.

A strong standard range

Our extensive and highly-developed standard range offers you mechanical, electronic and thermal components in an almost unlimited variety of dimensions and specifications. Simply select a complete ready system or configure your system from our standard components, online or using the catalogue, to your exact requirements.

Flexibility for modifications

Often only small adjustments are needed to create the required solution from a standard product. And we have set ourselves up to offer just that. We can make modifications in accordance with your individual specifications - with our usual speed and reliability.

Competent with new developments

If your requirements cannot be met with standard products or modified standard solutions, our qualified and experienced team will create a customised solution for your system. We have all the necessary development and manufacturing competencies gathered under one roof.

Standards/Approvals

- Inner and outer dimensions in accordance with:
  IEC 60297-3-101 / IEEE 1101.1
  IEC 60297-3-102 / IEEE 1101.10/11
  IEC 60297-3-103
- Ingress protection IP 20 in accordance with IEC 60529
- EMC testing in accordance with IEC 61587-3
- In accordance with PICMG 2.0 rev. 3.0, PICMG 2.16 and PXI 2.0

PICMG Open Modular Computing Specifications

Areas of application

- Measurement, control and instrumentation technology
- Automation technology, machine monitoring
- Aerospace
- Defence systems
- Medical technology
- Telecommunications

oneClick

User manuals and technical documentation at www.schroff.biz/oneclick
Enter part number

Systems – CompactPCI subrack systems

Overview 8.68

CompactPCI subrack and case systems

- Large selection of standard CompactPCI, PSB and H.110 systems
- Standard systems to the new CompactPCI PlusIO and CompactPCI Serial standards
- Individual configuration within 9 working days
- Custom solutions on request

12310002

CompactPCI Serial

CompactPCI Serial (PICMG CPCI-S.0) is a systematic further development of CompactPCI. Instead of the former PCI bus, this defines the current and future serial protocols for data transmission. In addition to PCIe, S-ATA, USB 2.0 & 3.0 and Ethernet are also available on every slot.

12309004

CompactPCI PlusIO

CompactPCI PlusIO (PICMG 2.30) defines a unified pinout for the fast serial PCIe, S-ATA, USB and Ethernet protocols on the 32-bit CompactPCI system slot. Hybrid CompactPCI/CompactPCI Serial systems can be built. CompactPCI PlusIO thus offers simple migration to the new technology.

12302002

CompactPCI

CompactPCI (PICMG 2.0) was specified in 1995 and is based on the widely-used PCI bus. This bus, with the CompactPCI specification, is packaged in a robust modular 19" enclosure and is thus suitable for industrial use.

12306003

PSB

PSB (Packet Switching Backplane, PICMG 2.16) and H.110 (Computer Telephony Bus, PICMG 2.5) are CompactPCI sub-specifications that define additional buses, specifically for telecommunications applications, in 6 U CompactPCI.

Subracks

CompactPCI subracks for building an individual CompactPCI system can be found in the subracks section, page 6.16

30407004

ServicePLUS from page 8.112

e.g. individual configuration and assembly
e.g. modifications (integration)
e.g. downloads (CAD drawings, user manuals, test reports)
e.g. custom solutions

www.schroff.biz/ServicePLUS

CompactPCI Serial
4 U, 9 slot 8.70

CompactPCI PlusIO
4 U, 8 slot 8.72

CompactPCI subrack systems
with ATX power supply,1, 2, 3 U .. 8.75
with 19" power supply, 1, 2, 3 and 4 U 8.76
3 U 8.77
4 U 8.78
6 U 8.80
6 + 1 U 8.81

CompactPCI case systems
4 U 8.83
7 U 8.84

PSB plug-in units
4 U 8.85
10 U 8.86

Subracks
Kit, shielded, with/without rear I/O 6.16

ServicePLUS ... 8.112

CompactPCI Serial, 4 U, with/without rear I/O

12315001

Front view (24579-416)

12315002

Front view with rear I/O (24579-421)

12315003

Rear view with rear I/O (24579-421)

12315004

Fan module

- 4 U CompactPCI Serial system with vertical 3 U board cage
- Airflow from bottom to top with fan modules that can be changed on the front
- Retrofittable air filter
- Supports PCIe up to Gen3, USB 2.0 and 3.0, S-ATA up to Rev 3.0, and Ethernet up to 10 GBase-T
- Preference types can be ordered directly from stock, other configurations on request
- AC wide range input,
  1 pluggable 300 W PSU (without rear I/O),
  2 pluggable 300 W PSUs (with rear I/O)
- 9 slot backplane, system slot left, Ethernet as star

Delivery includes (completely assembled, wired and tested)

Item	Qty	Description
1	1	Shielded 19" chassis, Al; perforated top cover and base plate; front handles
2	9	Slot at front; IEEE guide rails incl. ESD clips (ESD clips fitted at bottom front), for vertical board mounting (3 U, 160 mm deep)
3	9	Version with rear I/O: Slot at rear; IEEE guide rails incl. ESD clips (ESD clips fitted at bottom), for vertical mounting of rear I/O boards (3 U, 80 mm deep)
4	1	CompactPCI Serial backplane for 3 U boards; 9 slot, system slot left (without rear I/O part no. 23007-629, with rear I/O part no. 23007-669)
5	1 / 2	Power backplane, 3 U, 8 HP with 1 x Pwrblade connector without rear I/O, 2 power backplanes for version with rear I/O (part no. 23098-397)
6	1 / 2	19" PSU, 300 W, 3 U, 8 HP (part no. 11098-538); 2 PSUs installed for version with rear I/O
7	1	AC input module, 3 U, 8 HP; A/C line filter, max. current 10 A
8	1	Hot-swap fan tray, pull-out, 1 U, 3 × 12 V_{DC} fans
9	1	Cable harness to connect all system components

Order Information

Height U	Height mm	Width HP	Depth mm	Number of slots	Version	Part no.
4	177	84	275	9	Without rear I/O	**24579-416**
4	177	84	275	9	With rear I/O	**24579-421**
Accessories						
Air filter retainer for CompactPCI Serial systems 1 piece						24579-632
Air filter mat for CompactPCI, CompactPCI Serial, and VME systems 1 piece						**60713-471**

Note

- System in accordance with IEC 60297-3-101, -102, -103; IEEE 1101.1, 1101.10/11; backplane in accordance with PICMG CPCI-S.0
- Modified systems available on request

ServicePLUS see page 8.112

PICMG® Open Modular Computing Specifications

Systems – CompactPCI Serial subrack systems

4 U, 9 slot, 44 HP, without rear I/O, with 19" PSU

12315005

Frontansicht

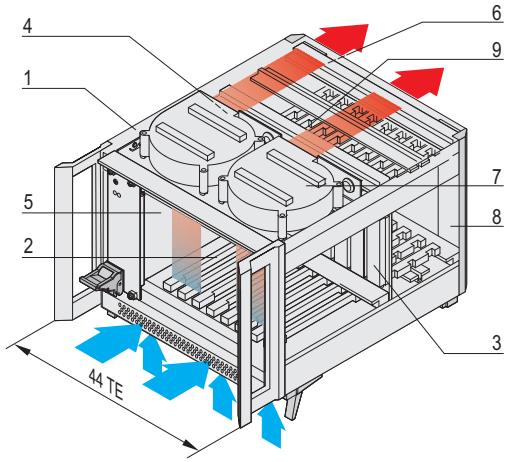

12312050

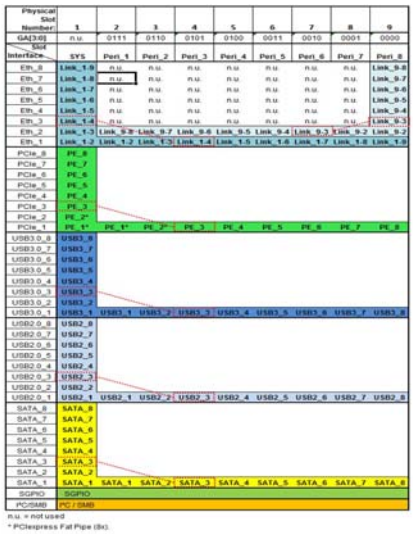

12415029

Backplane topology

- System for vertical board mounting with board format
  - Front: 3 U, 160 mm deep, 9 slot
- Backplane
  - 9 slot, 3 U, CompactPCI Serial
- 19" PSU, 300 W, 3 U, 8 HP
- Heat dissipation by two radial fans, from front to rear

Delivery comprises (completely assembled, wired and tested)

Item	Qty	Description
1	1	ratiopacPRO-air case, RAL 9006, shielded, perforated air inlet/exhaust openings front and rear; front handles RAL 7016
2	9	Front slot; IEEE guide rails, incl. ESD clips (ESD clips fitted to bottom front), for vertical boards (3 U, 160 mm deep)
3	1	Backplane for 3 U boards; 9 slot CompactPCI Serial (part no. **23007-629**)
4	1	Power backplane, 3 U, 8 HP with 1 x P47 connector (part no. **23098-397**)
5	1	19" compatible power supply, 250 W (3 U, 8 HP; part no. **11098-538**)
6	1	AC input module, 3 U, 8 HP; AC line filter, 110 ... 250 V_{AC}, 50 ... 60 Hz, max. current 10 A
7	2	Radial fan, 36 m^3/h each, free blowing
8	1	Front panel, rear, 3 U, 36 HP
9	1	Cable harness, adaptor board (**23098-399**) to connect all system components

Order Information

Height U	Height mm	Width HP	Depth mm	Number of slots	Part no.
4	177	44	275	9	24579-634
Accessories					
Equipment cables					**Page 3.38**
Front panels					**Page 7.5**
Modules to mount drive units					**Page 8.110**
Front panels with handle					**Page 7.32**
Fan control modules (FCM)					**Page 8.108**

Note

- Modified systems available on request
- System in accordance with IEC 60297-3-101, -102, -103; IEEE 1101.1, 1101.10/11; backplane in accordance with PICMG CPCI-S.0

ServicePLUS see page 8.112

PICMG® Open Modular Computing Specifications

4 U, 8 slot, with rear I/O, ATX PSU

12309004

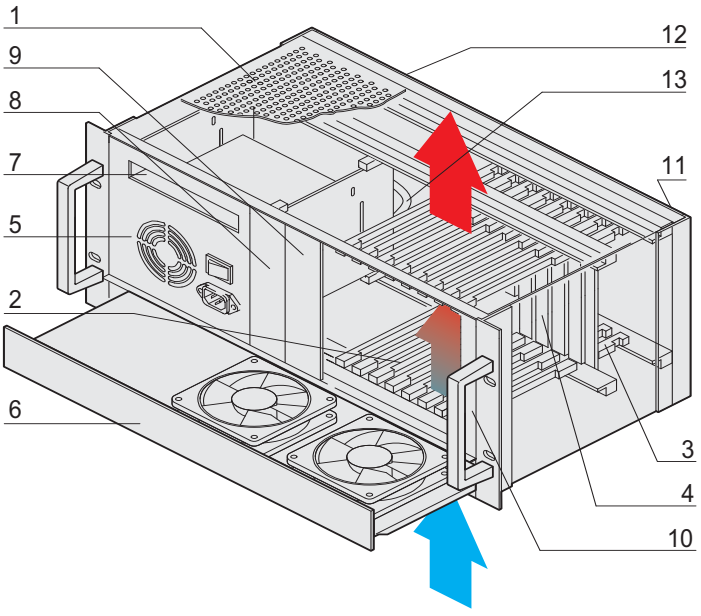

12308050

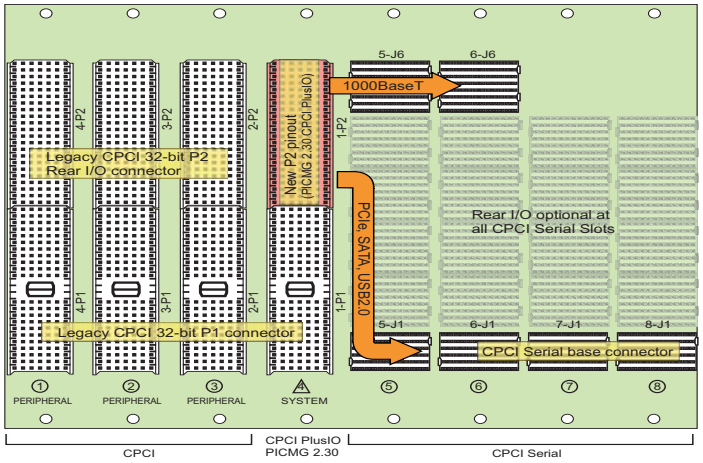

12409051

Backplane topology

- System for vertical board mounting with board format
  - Front: 3 U, 160 mm deep, 8 slot
  - Rear, rear I/O: 3 U, 80 mm deep, 3 slot
- Backplane
  - 4 slot, 3 U, 32 bit, CompactPCI
  - 4 slot, 3 U, CompactPCI PlusIO
  - Power Backplane
- ATX PSU, 300 W
- Heat dissipation by 1 U hot-swap fan unit, from bottom to top
- Option to mount a slimline DVD drive and hard disk

Delivery comprises (completely assembled, wired and tested)

Item	Qty	Description
1	1	Shielded 19" chassis, Al; perforated top cover and base plate; front handles
2	8	Front slot; IEEE guide rails, incl. ESD clips (ESD clips fitted to bottom front), for vertical boards (3 U, 160 mm deep)
3	3	Rear slot; IEEE guide rails, incl. ESD clips (ESD clips fitted to bottom), for vertical rear I/O boards (3 U, 80 mm deep)
4	1	Backplane for 3 U boards; 8 slots comprising 4 slots 32-bit CompactPCI plus 4 slots CompactPCI PlusIO (PICMG 2.30, part no. 23007-601)
5	1	ATX power supply, 300 W; 32 HP wide range input 100 ... 240 V_{AC}, (3.3 V/28 A, 5 V/35 A, 12 V/22 A, -12 V/0.8 A); IEC AC input module with socket; mains switch; fan
6	1	Hot-swap fan tray, extractable, 1 U, 2 × 12 V_{DC} fan
7	1	Module to accomodate a slimline DVD drive unit
8	1	3 U, 8 HP module to accommodate a hard disk drive
9	1	Front panel, front, 3 U, 8 HP
10	1	Front panel, front, 3 U, 4 HP, removable, to expand system slot to 8 HP
11	1	Front panel, rear, 3 U, 24 HP
12	1	Front panel, rear, 3 U, 48 HP
13	1	Cable harness to connect all system components

Order Information

Height U	Height mm	Width HP	Depth mm	Number of slots	Part no.
4	177	84	275	8	24579-405

Accessories	
Equipment cables	Page 3.38
Front panels	Page 7.5
Modules to mount drive units	Page 8.110
Front panels with handle	Page 7.32
Fan control modules (FCM)	Page 8.108

Note

- Modified systems available on request
- System in accordance with IEC 60297-3-101, -102, -103; IEEE 1101.1, 1101.10/11; backplane in accordance with PICMG 2.0 rev. 3.0 and 2.30

ServicePLUS see page 8.112

PICMG Open Modular Computing Specifications

Systems – CompactPCI PlusIO subrack systems

4 U, 8 slot, with rear I/O, 19"-compatible PSU

12309005

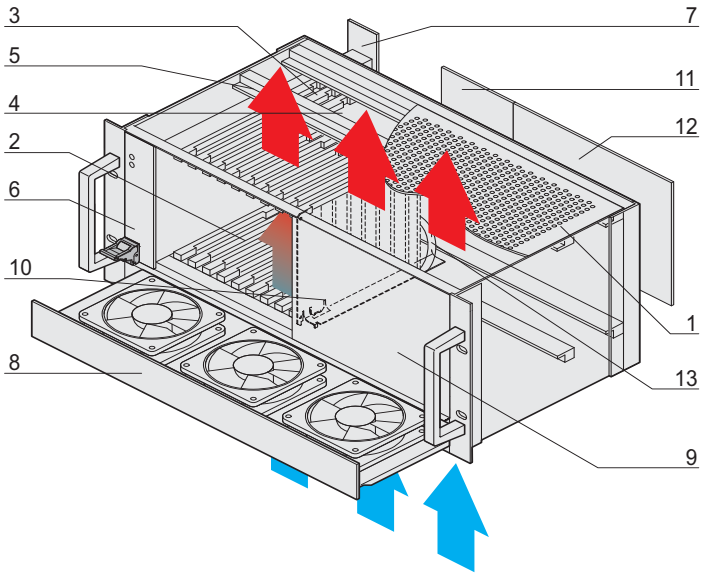

12309053

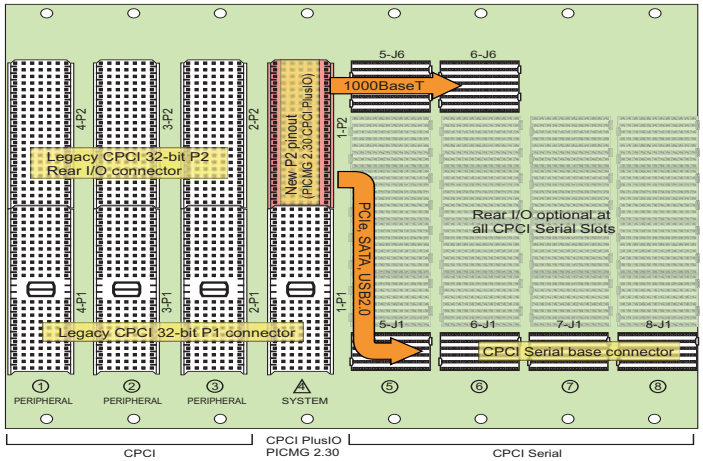

12409051

Backplane topology

- System for vertical board mounting with board format
  - Front: 3 U, 160 mm deep, 8 slot
  - Rear, rear I/O: 3 U, 80 mm deep, 3 slot
- Backplane
  - 4 slot, 3 U, 32 bit, CompactPCI
  - 4 slot, 3 U, CompactPCI PlusIO
  - Power backplane
- 19"-compatible PSU, 250 W, 3 U, 8 HP
- Heat dissipation by 1 U hot-swap fan unit, from bottom to top
- Option to mount a hard disk

Delivery comprises (completely assembled, wired and tested)

Item	Qty	Description
1	1	Shielded 19" chassis, Al; perforated top cover and base plate; front handles
2	8	Front slot; IEEE guide rails, incl. ESD clips (ESD clips fitted to bottom front), for vertical boards (3 U, 160 mm deep)
3	3	Rear slot; IEEE guide rails, incl. ESD clips (ESD clips fitted to bottom), for vertical rear I/O boards (3 U, 80 mm deep)
4	1	Backplane for 3 U boards; 8 slots comprising 4 slots 32-bit CompactPCI plus 4 slots CompactPCI PlusIO (PICMG 2.30, part no. **23007-601**)
5	1	Power backplane, 3 U, 8 HP with 1 x P47 connector (part no. **23098-105**)
6	1	19" compatible power supply, 250 W (3 U, 8 HP, part no. **13100-141**)
7	1	AC input module, 3 U, 8 HP; AC line filter, 110 ... 250 V_{AC}, 50 ... 60 HZ, max. current 10 A
8	1	Hot-swap fan tray, extractable, 1 U, 3 x 12 V_{DC} fans
9	1	Front panel front, 3 U, 44 HP
10	1	Air baffle, 3 U, 160 mm deep
11	1	Front panel, rear, 3 U, 60 HP
12	1	Front panel, rear, 3 U, 4 HP
13	1	Cable harness to connect all system components

Order Information

Height U	Height mm	Width HP	Depth mm	Number of slots	Part no.
4	177	84	275	8	24579-400

Accessories	
Equipment cables	Page 3.38
Front panels	Page 7.5
Modules to mount drive units	Page 8.110
Front panels with handle	Page 7.32
Fan control modules (FCM)	Page 8.108

Note

- Modified systems available on request
- System in accordance with IEC 60297-3-101, -102, -103; IEEE 1101.1, 1101.10/11; backplane in accordance with PICMG 2.0 rev. 3.0 and 2.30

ServicePLUS see page 8.112

PICMG Open Modular Computing Specifications

Systems – CompactPCI PlusIO subrack systems

4 U, 8 slot, 44 HP, with rear I/O

12312001

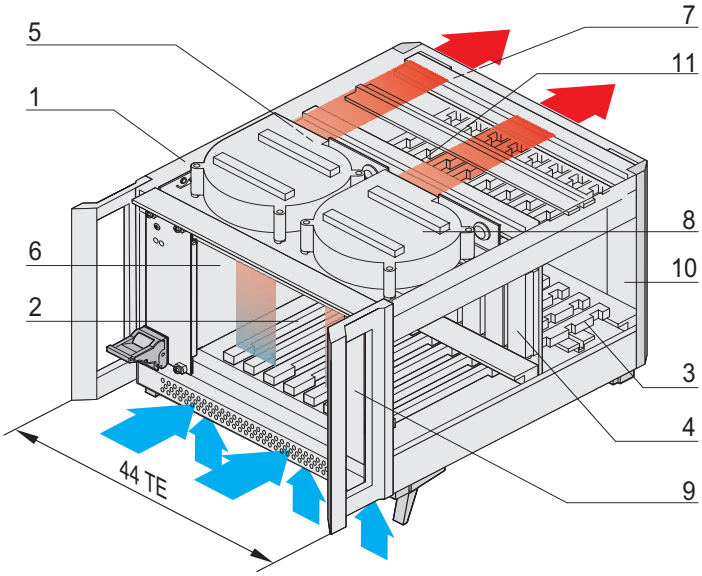

12309052

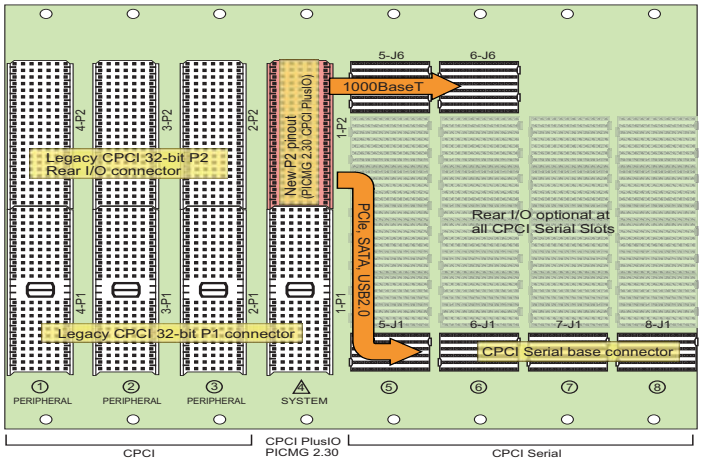

12409051

Backplane topology

- System for vertical board mounting with board format
  - Front: 3 U, 160 mm deep
  - Rear I/O: 3 U, 80 mm deep, 3 slot
- Backplane
  - 4 slot, 3 U, 32 bit, CompactPCI
  - 4 slot, 3 U, CompactPCI PlusIO
  - Power Backplane
- 19" PSU, 250 W, 3 U, 8 HP
- Heat dissipation by two radial fans, from front to rear

Delivery comprises (completely assembled, wired and tested)

Item	Qty	Description
1	1	ratiopacPRO-air case, RAL 9006, shielded, perforated air inlet/exhaust openings front and rear; front handles RAL 7016
2	8	Front slot; IEEE guide rails, incl. ESD clips (ESD clips fitted at bottom front), for vertical boards (3 U, 160 mm deep)
3	3	Rear slot; IEEE guide rails, incl. ESD clips (ESD clips fitted at bottom), for vertical rear I/O boards (3 U, 80 mm deep)
4	1	Backplane for 3 U boards; 8 slots comprising 4 slots 32-bit CompactPCI plus 4 slots CompactPCI PlusIO (PICMG 2.30, part no. 23007-601)
5	1	Power backplane, 3 U, 8 HP with 1 x P47 connector part no. 23098-105)
6	1	19" compatible power supply, 250 W (3 U, 8 HP; part no. 13100-141)
7	1	AC input module, 3 U, 8 HP; AC line filter, 110 ... 250 V_{AC}, 50 ... 60 HZ, max. current 10 A
8	2	Radial fan, 36 m^3/h each, free blowing
9	1	Front panel, front, 3 U, 4 HP, removable
10	1	Front panel, rear, 3 U, 24 HP
11	1	Cable harness to connect all system components

Height U	Height mm	Width HP	Depth mm	Number of slots	Part no.
4	177	44	275	8	24579-605

Accessories	
Equipment cables	Page 3.38
Front panels	Page 7.5
Modules to mount drive units	Page 8.110
Front panels with handle	Page 7.32
Fan control modules (FCM)	Page 8.108

Note

- Modified systems available on request
- System in accordance with IEC 60297-3-101, -102, -103; IEEE 1101.1, 1101.10/11; backplane in accordance with PICMG 2.0 rev. 3.0 and 2.30

ServicePLUS see page 8.112

PICMG® Open Modular Computing Specifications

Systems – CompactPCI subrack systems

Systems, 1, 2, 3 U, with rear I/O and ATX PSU

12305001

12305005

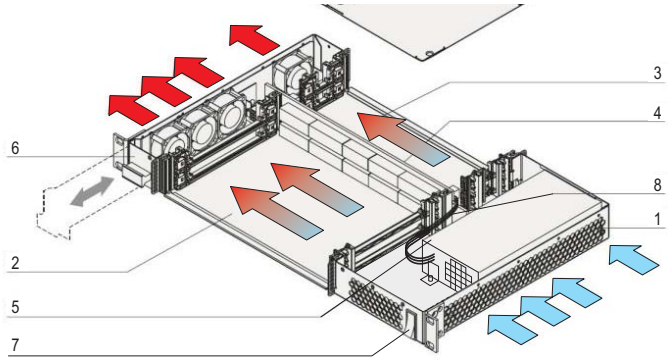

12304055

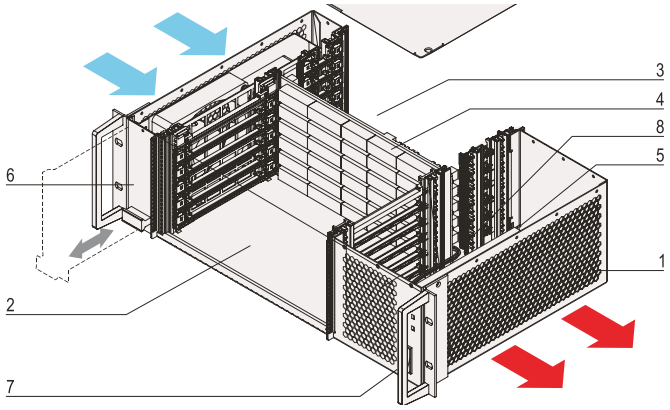

12304060

- System for horizontal board mounting with board format
  - Front: 6 U, 160 mm deep
  - Rear, rear I/O: 6 U, 80 mm deep
- Backplane: 2, 4, 6 slot, 64 bit; system slot on left
- ATX PSU
- Heat dissipation by extractable hot-swap fan unit; in 1 U system from right to left; in 2 and 3 U systems from left to right

Delivery comprises (completely assembled, wired and tested)

Item	Qty	Description
1	1	Shielded 19" chassis, St, powder-coated, black, RAL 9005
2	1	Number of front slots see Order Information; IEEE guide rails, incl. ESD clips (ESD clips fitted to front left), for horizontal board mounting (6 U, 160 mm deep)
3	1	Number of rear slots see Order Information; IEEE guide rails, incl. ESD clips (ESD clips fitted to front left), for horizontal mounting of rear I/O boards (6 U, 80 mm deep)
4	1	Backplane for 6 U boards, for number of slots see Order Information, 64 bit; system slot on the left
5	1	ATX PSU, wide input range 100 ... 240 V_{AC} (rating data see Order Information); IEC plug, switch (controls DC power only), LED (Power ON); Fan
6	1	Hot-swap fan unit, number of fans see Order Information
7	1	Mains switch
8	1	Cable harness to connect all system components

Note

- Modified systems available on request
- System in accordance with IEC 60297-3-101, -102, -103; IEEE 1101.1, 1101.10/11; backplane in accordance with PICMG 2.0 rev. 3.0 and 2.30

Order Information

Height U	Height mm	Depth mm	Backplane Slots	Fan unit Number of fans	Power supply	Part no.
1	43.65	275	2 slot, 6 U	4	ATX 250 W, 3.3 V/14 A, 5 V/23 A, 12 V/16 A, -12 V/0.5 A	**24579-077**
2	88.10	275	4 slot, 6 U	2	ATX 250 W, 3.3 V/14 A, 5 V/20 A, 12 V/16 A, -12 V/0.8 A	**24579-081**

***) Systems with additional heat dissipation in rear I/O space for 3 U systems available on request**

ServicePLUS see page 8.112

Open Modular Computing Specifications

Accessories	
Equipment cables	Page 3.38
Front panels	Page 7.5
Modules to mount drive units	Page 8.110
Front panels with handle	Page 7.32
Fan control modules (FCM)	Page 8.108

Systems, 1, 2, 3, 4 U, with rear I/O, for 19" PSU

12305002

12305007

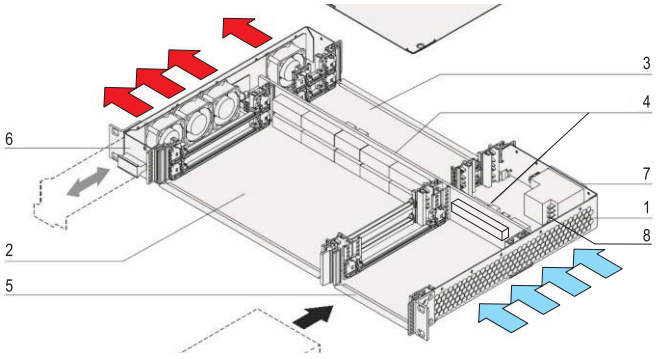

12304056

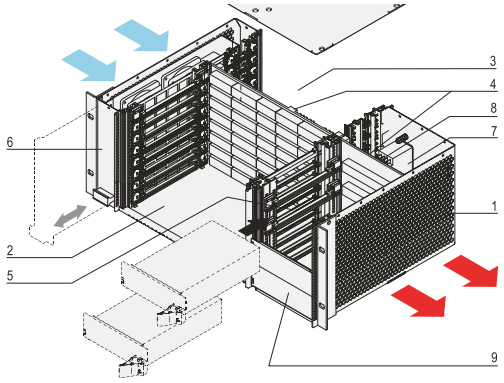

12305050

- System for horizontal board mounting with board format
  - Front: 6 U, 160 mm deep
  - Rear, rear I/O: 6 U, 80 mm deep
- Monolithic backplane for signals and power
  - 2, 4, 6, 8 slot, 6 U, 64 bit; system slot on left
  - Power plug to PICMG 2.11 (P 47)
- Prepared for installation of 19" CompactPCI PSUs (3 U, 8 HP)
- Heat dissipation by extractable hot swap fan unit; 1 U system from right to left; in 2, 3 and 4 U systems from left to right

Delivery comprises (completely assembled, wired and tested)

Item	Qty	Description
1	1	Shielded 19" chassis, St, powder-coated, black, RAL 9005
2	1	Number of slots to front see Order Information; IEEE guide rails, incl. ESD clips (ESD clips fitted front right), for horizontal board mounting (6 U, 160 mm deep)
3	1	Number of rear slots see Order Information; IEEE guide rails, incl. ESD clips (ESD clips fitted front right), for horizontal mounting of rear I/O boards (6 U, 80 mm deep)
4	1	Monolithic backplane for 6 U boards and voltage supply, for number of slots see Order Information, 64 bit; system slot left, in accordance with PICMG 2.0 rev. 3.0, voltage supply: 1 x P 47 socket for 1 U, 2 x P 47 socket for 2, 3, 4 U
5	1	Installation space for 19" CompactPCI power supply unit (3 U, 8 HP; For quantity see Order Information)
6	1	Hot-swap fan unit, number of fans see Order Information
7	1	AC input (IEC plug), mains filter module, fuse, mains switch
8	1	Cable harness to connect all system components
9	1	3 U, 8 HP front panel, mounted at front, from 2 U system

Note

- Modified systems available on request
- 48 V_{DC} version on request
- System in accordance with IEC 60297-3-101, -102, -103; IEEE 1101.1, 1101.10/11; backplane in accordance with PICMG 2.0 rev. 3.0 and 2.30

Order Information

Height U	Height mm	Depth mm	Backplane Slots	Fan unit Number of fans	Power supply (please order separately)	Quantity Connector type	Part no.
1	43.65	275	2 slot, 6 U	4	1	1 x P 47	**24579-078**
2	88.10	275	4 slot, 6 U	2	2	2 x P 47	**24579-082**
3	132.50	275	6 slot, 6 U	1 *)	2 ... 3	2 x P 47	**24579-080**
4	177.00	275	8 slot, 6 U	4 *)	2 ... 4	2 x P 47	24579-106
19" compatible power supply, 250 W, 3 U, 8 HP Please order PSU separately, see page 9.24							**13100-141**

***)** Systems with additional heat dissipation in rear I/O space for 3 U and 4 U systems available on request

ServicePLUS see page 8.112

Open Modular Computing Specifications

Accessories	
Equipment cables	Page 3.38
Front panels	Page 7.5
Modules to mount drive units	Page 8.110
Front panels with handle	Page 7.32
Fan control modules (FCM)	Page 8.108

Systems – CompactPCI subrack systems

System, 3 U, 8 slot, with rear I/O

12302002

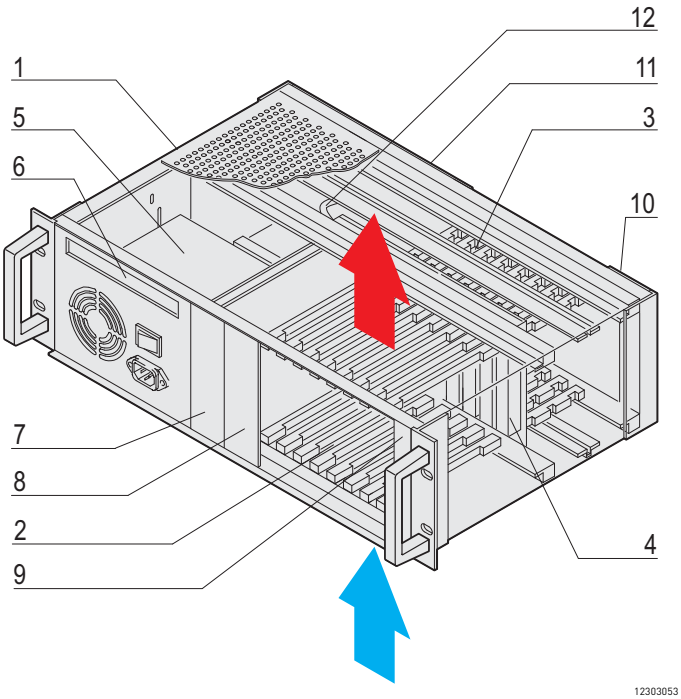

12303053

- System for vertical board mounting with board format
  - Front: 3 U, 160 mm deep
  - Rear, rear I/O: 3 U, 80 mm deep
- Backplane
  - 8 slot, 3 U, 32 bit; system slot on right
  - 8 HP wide CPU can be used
- ATX PSU, 300 W
- Heat dissipation by convection, upward from below
- Option to mount a slimline DVD drive and hard disk

Delivery comprises (completely assembled, wired and tested)

Item	Qty	Description
1	1	Shielded 19" chassis, Al; perforated top cover and base plate; 2 front handles
2	8	Front slot; IEEE guide rails, incl. ESD clips (ESD clips fitted bottom front), for vertical boards (3 U, 160 mm deep)
3	8	Rear slot; IEEE guide rails, incl. ESD clips (ESD clips fitted bottom), for vertical rear I/O boards (3 U, 80 mm deep)
4	1	Backplane for 3 U boards; 8 slot, 32 bit (part no. 23006-818); system slot on right, 4 HP (8 HP wide CPU can be used)
5	1	ATX power supply; 300 W; 32 HP, wide input range 100 ... 240 V_{AC} (3.3 V/28 A, 5 V/35 A, 12 V/22 A, -12 V/0.8 A); IEC AC input module with socket; mains switch; fan
6	1	Module to accomodate a slimline DVD drive unit
7	1	3 U, 8 HP module to accommodate a hard disk drive
8	1	Front panel front, 3 U, 8 HP
9	1	Front panel, front, 3 U, 4 HP, to expand system slot to 8 HP
10	1	Front panel, rear, 3 U, 4 HP
11	1	Front panel, rear, 3 U, 48 HP
12	1	Cable harness to connect all system components

Order Information

Height U	Height mm	Depth mm	Number of slots	Part no.
3	132.55	275	8	**24579-031**
Accessories				
DC fan 12 V, air flow volume 140 m^3/h, 119 x 119 x 32 mm, 1 piece				**60713-600**
Fan retainer for 119 x 119 x 32 mm fan, (E)PB foam, 1 piece				**24579-212**
Fan tray, 1 U for 3 or 6 U CompactPCI systems (boards assembled vertically), 1 piece				**24579-105**
Air filter consisting of filter holder and filter mat, PU 1 set				**24579-033**
Equipment cables				**Page 3.38**
Front panels				**Page 7.5**
Modules to mount drive units				**Page 8.110**
Front panels with handle				**Page 7.32**
Fan control modules (FCM)				**Page 8.108**

Note

- Modified systems available on request
- System in accordance with IEC 60297-3-101, -102, -103; IEEE 1101.1, 1101.10/11; backplane in accordance with PICMG 2.0 rev. 3.0 and 2.30

ServicePLUS see page 8.112

PICMG Open Modular Computing Specifications

System, 4 U, 8 slot, with rear I/O, ATX frame PSU

12308001

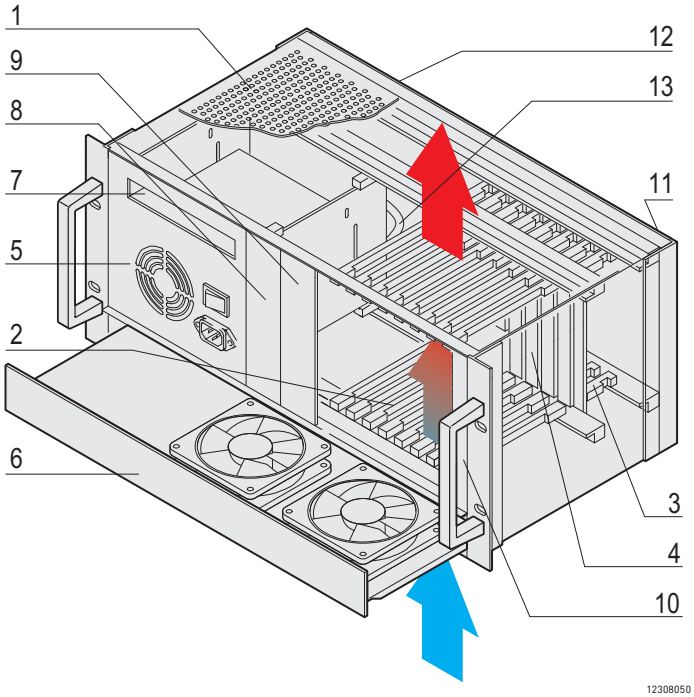

12308050

ServicePLUS see page 8.112

Open Modular Computing Specifications

- System for vertical board mounting with board format
  - Front: 3 U, 160 mm deep
  - Rear, rear I/O: 3 U, 80 mm deep
- Backplane
  - 8 slot, 3 U, 32 bit; system slot on right
  - 8 HP wide CPU can be used
- ATX PSU, 300 W
- Heat dissipation by 1 U hot-swap fan unit, upward from below
- Option to mount a slimline DVD drive and hard disk

Delivery comprises (completely assembled, wired and tested)

Item	Qty	Description
1	1	Shielded 19" chassis, Al; perforated top cover and base plate; front handles
2	8	Front slot; IEEE guide rails, incl. ESD clips (ESD clips fitted to bottom front), for vertical boards (3 U, 160 mm deep)
3	8	Rear slot; IEEE guide rails, incl. ESD clips (ESD clips fitted to bottom), for vertical rear I/O boards (3 U, 80 mm deep)
4	1	Backplane for 3 U boards; 8 slot, 32 bit (part no. 23006-818); system slot on right, 4 HP (8 HP wide CPU can be used)
5	1	ATX power supply, 300 W; 32 HP, wide input range 100 ... 240 V_{AC} (3.3 V/28 A, 5 V/35 A, 12 V/22 A, -12 V/0.8 A); IEC AC input module with socket; mains switch; fan
6	1	Hot-swap fan tray, extractable, 1 U, 2 × 12 V_{DC} fans
7	1	Module to accomodate a slimline DVD drive unit
8	1	Module to accomodate a CD ROM drive, 3 U, 8 HP
9	1	Front panel, front, 3 U, 8 HP
10	1	Front panel, front, 3 U, 4 HP, removable, to expand system slot to 8 HP
11	1	Front panel, rear, 3 U, 4 HP
12	1	Front panel, rear, 3 U, 48 HP
13	1	Cable harness to connect all system components

Order Information

Height U	Height mm	Width HP	Depth mm	Number of slots	Part no.
4	177	84	275	8	24579-250
Accessories					
Air filter consisting of filter holder and filter mat, PU 1 set					**24579-033**
Equipment cables					**Page 3.38**
Front panels					**Page 7.5**
Modules to mount drive units					**Page 8.110**
Front panels with handle					**Page 7.32**
Fan control modules (FCM)					**Page 8.108**

Note

- Modified systems available on request
- System in accordance with IEC 60297-3-101, -102, -103; IEEE 1101.1, 1101.10/11; backplane in accordance with PICMG 2.0 rev. 3.0 and 2.30

Systems – CompactPCI subrack systems

System, 4 U, 8 slot, with rear I/O, 19"-compatible PSU

12308005

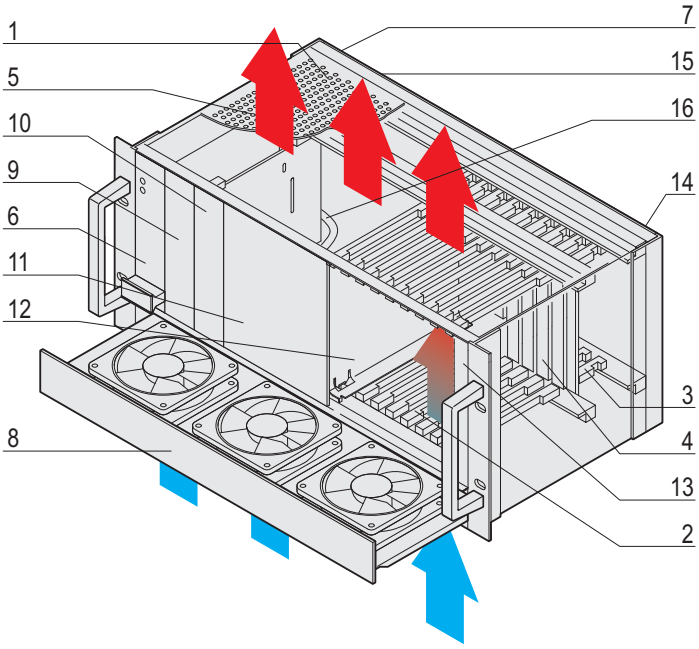

12308052

- System for vertical board mounting with board format
  - Front: 3 U, 160 mm deep
  - Rear, rear I/O: 3 U, 80 mm deep
- Backplane
  - 8 slot, 3 U, 32 bit; system slot on right
  - 8 HP wide CPU can be used, power backplane
- 19"-compatible PSU, 250 W, 3 U, 8 HP
- Heat dissipation by 1 U hot-swap fan unit, from bottom to top
- Option to mount a hard disk

Delivery comprises (completely assembled, wired and tested)

Item	Qty	Description
1	1	Shielded 19" chassis, Al; perforated top cover and base plate; front handles
2	8	Front slot; IEEE guide rails, incl. ESD clips (ESD clips fitted to bottom front), for vertical boards (3 U, 160 mm deep)
3	8	Rear slot; IEEE guide rails, incl. ESD clips (ESD clips fitted to bottom), for vertical rear I/O boards (3 U, 80 mm deep)
4	1	Backplane for 3 U boards; 8 slot, 32 bit (part no. **23006-818**); system slot on right, 4 HP (8 HP wide CPU can be used)
5	1	Power backplane, 3 U, 8 HP with 1 x P47 plug
6	1	19" compatible power supply, 250 W (3 U, 8 HP; part no. **13100-141**)
7	2	AC input module, 3 U, 8 HP; AC line filter, 110 ... 250 V_{AC}, 50 ... 60 HZ, max. current 10 A
8	1	Hot-swap fan tray, extractable, 1 U, 3 x 12 V_{DC} fans
9	1	Front panel front, 3 U, 8 HP
10	1	3 U, 8 HP module to accommodate a hard disk drive
11	1	Front panel front, 3 U, 24 HP
12	1	Air baffle, 3 U, 160 mm deep
13	1	Front panel, front, 3 U, 4 HP, removable, to expand system slot to 8 HP
14	1	Front panel, rear, 3 U, 4 HP
15	1	Front panel, rear, 3 U, 40 HP
16	1	Cable harness to connect all system components

Order Information

Height U	Height mm	Width HP	Depth mm	Number of slots	Part no.
4	177	84	275	8	24579-260
Accessories					
Air filter consisting of filter holder and filter mat, PU 1 set					**24579-033**
Equipment cables					**Page 3.38**
Front panels					**Page 7.5**
Modules to mount drive units					**Page 8.110**
Front panels with handle					**Page 7.32**
Fan control modules (FCM)					**Page 8.108**

ServicePLUS see page 8.112

Open Modular Computing Specifications

Note

- Modified systems available on request
- System in accordance with IEC 60297-3-101, -102, -103; IEEE 1101.1, 1101.10/11; backplane in accordance with PICMG 2.0 rev. 3.0 and 2.30

6 U, 8 slot, with rear I/O

12302004

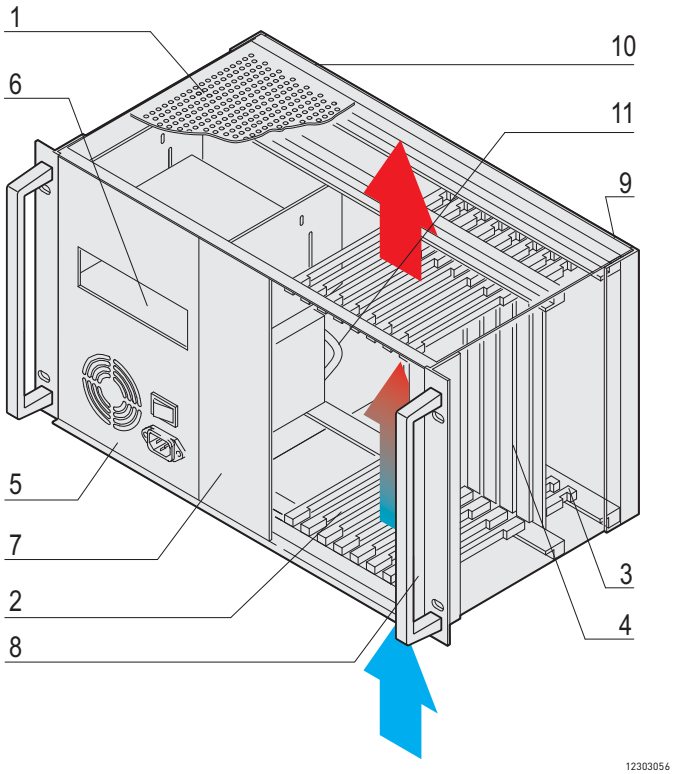

12303056

ServicePLUS see page 8.112

PICMG® Open Modular Computing Specifications

- System for vertical board mounting with board format
  - Front: 6 U, 160 mm deep
  - Rear, rear I/O: 6 U, 80 mm deep
- Backplane
  - 8 slot, 6 U, 64 bit; system slot to right
  - 8 HP wide CPU can be used
- ATX PSU, 300 W
- Heat dissipation by convection, from bottom to top
- Option to mount a 5.25" DVD drive unit

Delivery comprises (completely assembled, wired and tested)

Item	Qty	Description
1	1	Shielded 19" chassis, Al; perforated top cover and base plate; 2 front handles
2	8	Front slot; IEEE guide rails, incl. ESD clips (ESD clips fitted to bottom front), for vertical boards (6 U, 160 mm deep)
3	8	Rear slot; IEEE guide rails, incl. ESD clips (ESD clips fitted to bottom), for vertical rear I/O boards (6 U, 80 mm deep)
4	1	Backplane for 6 U boards; 8 slot, 64 bit (part no. 23006-868); system slot on right, 4 HP (8 HP wide CPU can be used)
5	1	ATX power supply, 300 W, 32 HP, wide input range 100 ... 240 V_{AC} (3.3 V/28 A, 5 V/35 A, 12 V/22 A, -12 V/0.8 A); IEC AC input module with socket; mains switch; fan
6	1	Module to accomodate a 5.25" DVD drive
7	1	Front panel, front, 6 U, 16 HP
8	1	Front panel, front, 6 U, 4 HP, removable, to expand system slot to 8 HP
9	1	Front panel, rear, 6 U, 4 HP
10	1	Front panel, rear, 6 U, 48 HP
11	1	Cable harness to connect all system components

Order Information

Height U	Height mm	Depth mm	Number of slots	Part no.
6	265.9	275	8	**24579-030**
Accessories				
DC fan 12 V, air flow volume 140 m^3/h, 119 x 119 x 32 mm, 1 piece				**60713-600**
Fan retainer for 119 x 119 x 32 mm fan, (E)PB foam, 1 piece				**24579-212**
Fan tray, 1 U for 3 or 6 U CompactPCI systems (boards assembled vertically), 1 piece				**24579-105**
Air filter consisting of filter holder and filter mat, PU 1 set				**24579-033**
Equipment cables				**Page 3.38**
Front panels				**Page 7.5**
Modules to mount drive units				**Page 8.110**
Front panels with handle				**Page 7.32**
Fan control modules (FCM)				**Page 8.108**

Note

- Modified systems available on request
- System in accordance with IEC 60297-3-101, -102, -103; IEEE 1101.1, 1101.10/11; backplane in accordance with PICMG 2.0 rev. 3.0 and 2.30

Systems – CompactPCI subrack systems

System, 7 U, 8 slot, with rear I/O

12302013

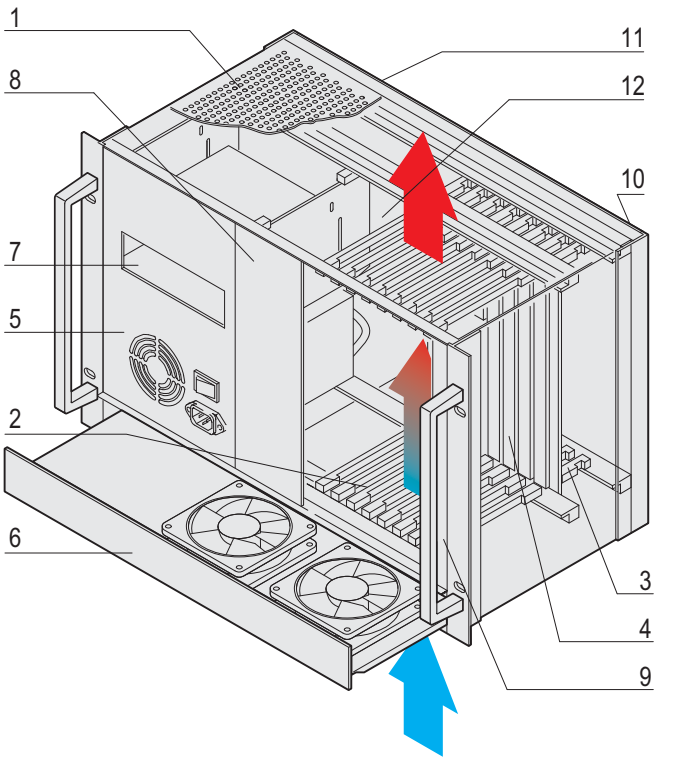

12303057

ServicePLUS see page 8.112

Open Modular Computing Specifications

- System for vertical board mounting with board format
  - Front: 6 U, 160 mm deep
  - Rear, rear I/O: 6 U, 80 mm deep
- Backplane
  - 8 slot, 6 U, 64 bit, system slot to right
  - 8 HP wide CPU can be used
- ATX PSU, 300 W
- Heat dissipation by 1 U hot-swap fan unit, from bottom to top
- Option to mount a 5.25" DVD drive unit

Delivery comprises (completely assembled, wired and tested)

Item	Qty	Description
1	1	Shielded 19" chassis, Al; perforated top cover and base plate; Front handles
2	8	Front slot; IEEE guide rails, incl. ESD clips (ESD clips fitted to bottom front), for vertical boards (6 U, 160 mm deep)
3	8	Rear slot; IEEE guide rails, incl. ESD clips (ESD clips fitted to bottom), for vertical rear I/O boards (6 U, 80 mm deep)
4	1	Backplane for 6 U boards; 8 slot, 64 bit (part no. 23006-868; system slot on right, 4 HP (8 HP wide CPU can be used)
5	1	ATX power supply, 300 W, 32 HP, wide input range 100 ... 240 V_{AC} (3.3 V/28 A, 5 V/35 A, 12 V/22 A, -12 V/0.8 A); IEC AC input module with socket; mains switch; fan
6	1	Hot-swap fan tray, extractable, 1 U, 2 × 12 V_{DC} fans
7	1	Module to accomodate a 5.25" DVD drive
8	1	Front panel, front, 6 U, 16 HP
9	1	Front panel, front, 6 U, 4 HP, removable, to expand system slot to 8 HP
10	1	Front panel, rear, 6 U, 4 HP
11	1	Front panel, rear, 6 U, 48 HP
12	1	Cable harness to connect all system components

Order Information

Height U	Height mm	Depth mm	Number of slots	Part no.
7	310.35	275	8	**24579-026**
Accessories				
Air filter consisting of filter holder and filter mat, PU 1 set				**24579-033**
Equipment cables				**Page 3.38**
Front panels				**Page 7.5**
Modules to mount drive units				**Page 8.110**
Front panels with handle				**Page 7.32**
Fan control modules (FCM)				**Page 8.108**

Note

- Modified systems available on request
- System in accordance with IEC 60297-3-101, -102, -103; IEEE 1101.1, 1101.10/11; backplane in accordance with PICMG 2.0 rev. 3.0 and 2.30

System, 4 U, 8 slot, 44 HP, with rear I/O

12309003

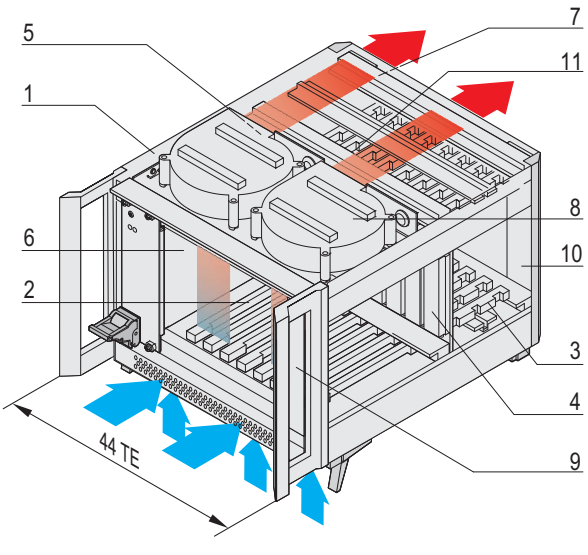

12309052

ServicePLUS see page 8.112

Open Modular Computing Specifications

- System for vertical board mounting with board format
  - Front: 3 U, 160 mm deep
  - Rear, rear I/O: 3 U, 80 mm deep
- Backplane
  - 8 slot, 3 U, 32 bit, system slot on right
  - 8 HP wide CPU can be used
- 19" PSU, 250 W, 3 U, 8 HP
- Heat dissipation by two radial fans, from front to rear

Delivery comprises (completely assembled, wired and tested)

Item	Qty	Description
1	1	ratiopacPRO-air case, RAL 9006, shielded, perforated air inlet/exhaust openings front and rear; front handles RAL 7016
2	8	Front slot; IEEE guide rails, incl. ESD clips (ESD clips fitted to bottom front), for vertical boards (3 U, 160 mm deep)
3	8	Rear slot; IEEE guide rails, incl. ESD clips (ESD clips fitted to bottom), for vertical rear I/O boards (3 U, 80 mm deep)
4	1	Backplane for 3 U boards; 8 slot, 32 bit (part no. 23006-818); system slot on right, 4 HP (8 HP wide CPU can be used)
5	1	Power backplane, 3 U, 8 HP with 1 x P47 plug
6	1	19" compatible power supply, 250 W (3 U, 8 HP; Part no. 13100-141)
7	1	AC input module, 3 U, 8 HP; AC line filter, 110 ... 250 V_{AC}, 50 ... 60 HZ, max. current 10 A
8	2	Radial fan, 36 m^3/h each, free blowing
9	1	Front panel, front, 3 U, 4 HP, removable, to expand system slot to 8 HP
10	1	Front panel, rear, 3 U, 4 HP
11	1	Cable harness to connect all system components

Order Information

Height U	Height mm	Width HP	Depth mm	Number of slots	Part no.
4	177	44	275	8	24579-604

Accessories	
Equipment cables	Page 3.38
Front panels	Page 7.5
Modules to mount drive units	Page 8.110
Front panels with handle	Page 7.32
Fan control modules (FCM)	Page 8.108

Note

- Modified systems available on request
- System in accordance with IEC 60297-3-101, -102, -103; IEEE 1101.1, 1101.10/11); Backplane, conforms to PICMG 2.0 rev. 3.0

Systems – CompactPCI case systems

System, 4 U, 8 slot, with rear I/O

12304002

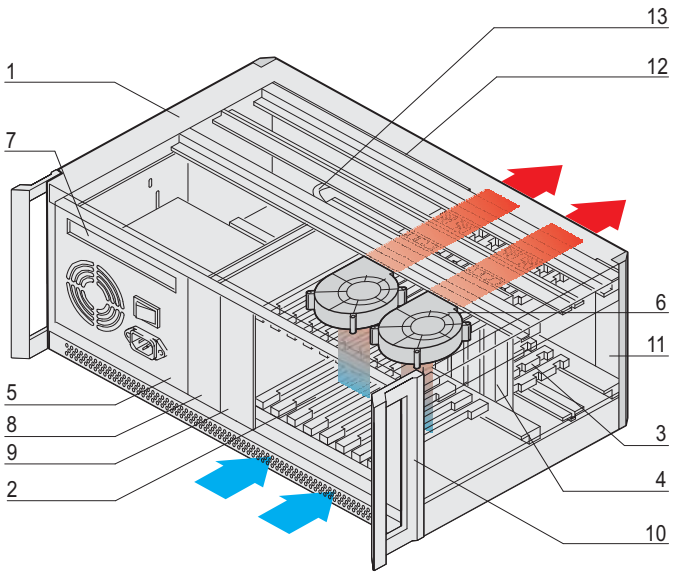

12304050

ServicePLUS see page 8.112

PICMG® Open Modular Computing Specifications

- System for vertical board mounting with board format
  - Front: 3 U, 160 mm deep
  - Rear, rear I/O: 3 U, 80 mm deep
- Backplane
  - 8 slot, 3 U, 32 bit, system slot to right
  - 8 HP wide CPU can be used
- ATX PSU, 300 W
- Heat dissipation by two radial fans, front to rear
- Option to mount a slimline DVD drive and hard disk

Delivery comprises (completely assembled, wired and tested)

Item	Qty	Description
1	1	ratiopacPRO-air case, RAL 9006, shielded, perforated air inlet/exhaust openings front and rear; front handles RAL 7016
2	8	Front slot; IEEE guide rails, incl. ESD clips (ESD clips fitted to bottom front), for vertical boards (3 U, 160 mm deep)
3	8	Rear slot; IEEE guide rails, incl. ESD clips (ESD clips fitted to bottom), for vertical rear I/O boards (3 U, 80 mm deep)
4	1	Backplane for 3 U boards; 8 slot, 32 bit (part no. 23006-818); system slot on right, 4 HP (8 HP wide CPU can be used)
5	1	ATX power supply, 300 W, wide range input 100 ... 240 V_{AC}, (3.3 V/28 A, 5 V/35 A, 12 V/22 A, -12 V/0.8 A); IEC AC input module with socket; mains switch; fan; 32 HP
6	2	Radial fan, 36 m^3/h each, free blowing
7	1	Module to accomodate a slimline DVD drive unit
8	1	3 U, 8 HP module to accommodate a hard disk drive
9	1	Front panel, front, 3 U, 8 HP
10	1	Front panel, front, 3 U, 4 HP, removable, to expand system slot to 8 HP
11	1	Front panel, rear, 3 U, 4 HP
12	1	Front panel, rear, 3 U, 48 HP
13	1	Cable harness to connect all system components

Order Information

Height U	Height mm	Depth mm	Number of slots	Part no.
4	177	275	8	**24579-602**

Accessories	
Spare fan unit Air barrier with 2 fitted radial fans, 1 piece	24579-225
Equipment cables	**Page 3.38**
Front panels	**Page 7.5**
Modules to mount drive units	**Page 8.110**
Front panels with handle	**Page 7.32**
Fan control modules (FCM)	**Page 8.108**

Note

- Modified systems available on request
- System in accordance with IEC 60297-3-101, -102, -103; IEEE 1101.1, 1101.10/11); Backplane, conforms to PICMG 2.0 rev. 3.0

Systems, 7 U, 8 slot, with rear I/O

12304003

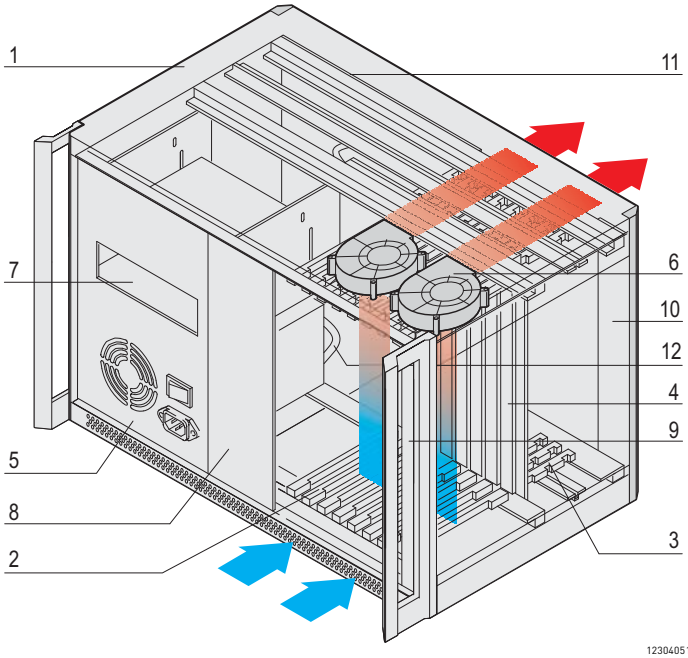

12304051

- System for vertical board mounting with board format
  - Front: 6 U, 160 mm deep
  - Rear, rear I/O: 6 U, 80 mm deep
- Backplane
  - 8 slot, 6 U, 64 bit, system slot to right
  - 8 HP wide CPU can be used
- ATX PSU, 300 W
- Heat dissipation by two radial fans, from front to rear
- Option to mount a 5.25" DVD drive unit

Delivery comprises (completely assembled, wired and tested)

Item	Qty	Description
1	1	ratiopacPRO-air case, RAL 9006, shielded, perforated air inlet/exhaust openings front and rear; front handles RAL 7016
2	8	Front slot; IEEE guide rails, incl. ESD clips (ESD clips fitted to bottom front), for vertical boards (6 U, 160 mm deep)
3	8	Rear slot; IEEE guide rails, incl. ESD clips (ESD clips fitted to bottom), for vertical rear I/O boards (6 U, 80 mm deep)
4	1	Backplane for 6 U boards; 8 slot, 64 bit (part no. 23006-868); system slot on right, 4 HP (8 HP wide CPU can be used)
5	1	ATX power supply, 300 W, wide input range 100 ... 240 V_{AC} (3.3 V/28 A, 5 V/35 A, 12 V/22 A, -12 V/0.8 A); IEC-plug; mains switch; fan; 32 HP
6	2	Radial fan, 36 m^3/h each, free blowing
7	1	Module to accomodate a 5.25" DVD drive
8	1	Front panel, front, 6 U, 16 HP, for fitting a hard disk drive
9	1	Front panel, front, 6 U, 4 HP, removable, to expand width of system slot to 8 HP
10	1	Front panel, rear, 6 U, 4 HP
11	1	Front panel, rear, 6 U, 48 HP
12	1	Cable harness to connect all system components

Order Information

Height U	Height mm	Depth mm	Number of slots	Part no.
7	310.35	275	8	**24579-612**
Accessories				
Spare fan unit Air barrier with 2 fitted radial fans, 1 piece				24579-225
Equipment cables				**Page 3.38**
Front panels				**Page 7.5**
Modules to mount drive units				**Page 8.110**
Front panels with handle				**Page 7.32**
Fan control modules (FCM)				**Page 8.108**

ServicePLUS see page 8.112

PICMG® Open Modular Computing Specifications

Note

- Modified systems available on request
- System in accordance with IEC 60297-3-101, -102, -103; IEEE 1101.1, 1101.10/11); Backplane, conforms to PICMG 2.0 rev. 3.0

Systems – CompactPCI subrack systems, telecoms

System, 4 U, 8 slot, with rear I/O, for telecoms applications

12306003

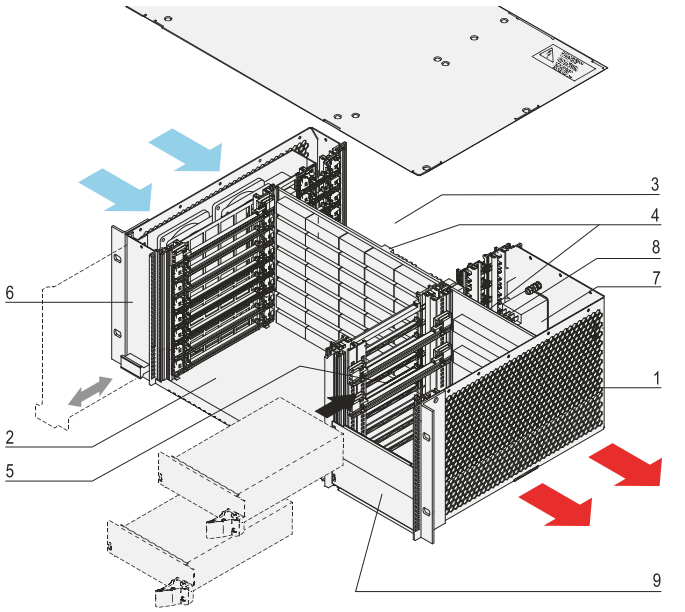

12305050

ServicePLUS see page 8.112

Open Modular Computing Specifications

- System for horizontal board mounting with board format
  - Front: 6 U, 160 mm deep
  - Rear, rear I/O: 6 U, 80 mm deep
- Monolithic backplane for (signals and power) 64-bit CompactPCI; PSB (**P**ackage **S**witched **B**ackplane), PICMG 2.16; H.110
  - 8 slot, 6 U, 64 bit CompactPCI (2 fabric/switch slots, 6 node slots H.110), system slot to left
  - Integrated power backplane with 2 x P 47 connectors
- Prepared to accept two 19" CompactPCI PSUs 250 W (3 U, 8 HP)
- Heat dissipation by extractable hot-swap fan unit, from left to right

Delivery comprises (completely assembled, wired and tested)

Item	Qty	Description
1	1	Shielded 19" chassis, St, powder-coated, black, RAL 9005
2	8	Front slot; IEEE guide rails, incl. ESD clips (ESD clips fitted to front right), for horizontal board mounting (6 U, 160 mm deep)
3	8	Rear slot; IEEE guide rails, incl. ESD clips (ESD clips fitted to front right), for horizontal mounting of rear I/O boards (6 U, 80 mm deep)
4	1	Backplane for 6 U boards and voltage supply (2 x P 47 sockets); 64-bit CompactPCI; PSB, 2 fabric/ switch slots; 6 node H.110 bus slots; part no. **23006-611**
5	–	Prepared to accommodate two 19" CompactPCI PSUs (250 W, 3 U, 8 HP), part no. **13100-141**
6	1	Hot-swap fan unit, 4 fans, each 109 m^3/h (64 cfm)
7	1	AC input (IEC plug), mains filter module, fuse, mains switch
8	1	Cable harness to connect all system components
9	2	Front panel front, 3 U, 8 HP

Order Information

Height U	Height mm	Depth mm	Number of slots	Part no.
4	177	275	8	**24579-135**
Accessories				
19" compatible power supply, 250 W, 3 U, 8 HP Please order PSU separately, see page 9.24				**13100-141**
Fan tray for black systems, to ventilate rear I/O space 7 fans				24579-112
Equipment cables				**Page 3.38**
Front panels				**Page 7.5**
Modules to mount drive units				**Page 8.110**
Front panels with handle				**Page 7.32**
Fan control modules (FCM)				**Page 8.108**

Note

- Modified systems available on request
- System in accordance with IEC 60297-3-101, -102, -103; IEEE 1101.1, 1101.10/11); Backplane, conforms to PICMG 2.16

System, 10 U, 16 slot, with rear I/O, for telecoms applications

12302005

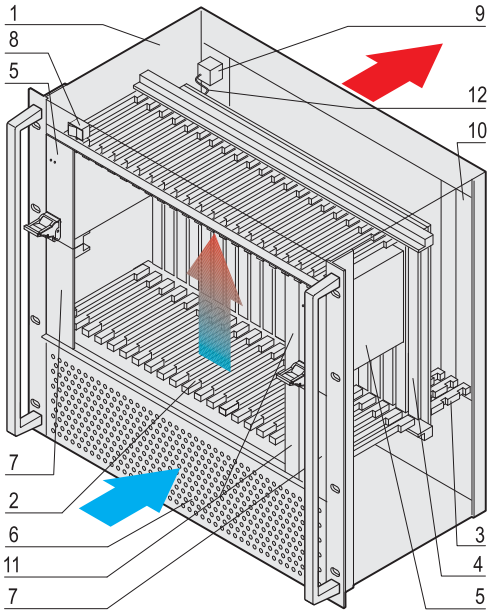

12303058

- System for vertical board mounting with board format
  - Front: 6 U, 160 mm deep
  - Rear, rear I/O: 6 U, 80 mm deep
- Backplane, PSB (**p**ackage **s**witched **b**ackplane), PICMG 2.16
  - 16-slot, 6 U, 64 bit (2 fabric/switch slots, 14 node slots)
- Two 19" CompactPCI power supplies, 250 W (3 U, 8 HP), prepared for installation of two further 19" compatible PSUs
- Heat dissipation by fan module, from front to rear
- Prepared for system monitoring with a chassis monitoring module (CMM)

Delivery comprises (completely assembled, wired and tested)

Item	Qty	Description
1	1	Shielded 19" chassis, Al; perforated front panel to front and rear, 19" bracket in RAL 9006; remaining parts passivated in aluminium; front handles (RAL 9005)
2	16	Front slot; IEEE guide rails, incl. ESD clips (ESD clips fitted to bottom front), for vertical boards (6 U, 160 mm deep)
3	16	Rear slot; IEEE guide rails, incl. ESD clips (ESD clips fitted to front bottom), for vertical mounting of rear I/O boards (6 U, 80 mm deep)
4	1	PSB backplane for 6 U boards, 64 bit, 2 fabric/switch slots, 14 node slots, 2 CompactPCI segments, system slot left and right; part no. 23006-610
5	2	19" compatible power supply, 250 W (3 U, 8 HP); part no. 13100-141
6	1	Extractable fan unit with filter mat, 3 fans, 24 V_{DC}, 270 m^3/h (160 cfm)
7	2	Front panel, front, 3 U, 8 HP, space for two further power supplies
8	1	DC switch on front
9	1	AC input (IEC connector), mains filter module, fuse, 6 U, 8 HP
10	1	Front panel, rear, 6 U, 8 HP
11	2	Front panel, front, 3 U, 4 HP, cover for optional CMM module space
12	1	Cable harness to connect all system components

Order Information

Height U	Height mm	Depth mm	Number of slots	Part no.
10	443.7	275	16	**24579-028**
Accessories				
19" compatible power supply, 250 W, 3 U, 8 HP Please order PSU separately, see page 9.24				**13100-141**
Chassis monitoring module (CMM) 3 U, 4 HP, 160 mm deep, 1 piece Please order PSU separately, see page 8.109				23207-022
Equipment cables				**Page 3.38**
Front panels				**Page 7.5**
Modules to mount drive units				**Page 8.110**
Front panels with handle				**Page 7.32**
Fan control modules (FCM)				**Page 8.108**

ServicePLUS see page 8.112

Open Modular Computing Specifications

Note

- Modified systems available on request
- System in accordance with IEC 60297-3-101, -102, -103; IEEE 1101.1, 1101.10/11); Backplane, conforms to PICMG 2.16

Systems – CompactPCI subrack systems, telecoms

Content

Cabinets 1
Wall mounted cases 2
Accessories for cabinets and wall mounted cases . 3
Climate control . 4
Electronics cases 5
Subracks/ 19" chassis 6
Front panels, plug-in units . . . 7
Systems 8
Power supply units 9
Backplanes . . . 10
Connectors, front panel component system 11
Appendix 12

Systems – VME, VME64x, VXS, VPX

10006001

What we understand to be a system

We at Schroff regard a system as being a combination of mechanical components like a subrack or case with electronic components such as a backplane and power supply unit, a cooling unit where appropriate and a system management module.

A strong standard range

Our extensive and highly-developed standard range offers you mechanical, electronic and thermal components in an almost unlimited variety of dimensions and specifications. Simply select a complete ready system or configure your system from our standard components, online or using the catalogue, to your exact requirements.

Flexibility for modifications

Often only small adjustments are needed to create the required solution from a standard product. And we have set ourselves up to offer just that. We can make modifications in accordance with your individual specifications - with our usual speed and reliability.

Competent with new developments

If your requirements cannot be met with standard products or modified standard solutions, our qualified and experienced team will create a customised solution for your system. We have all the necessary development and manufacturing competencies gathered under one roof.

Standards/certifications

- Inner and outer dimensions in accordance with:
  IEC 60297-3-101 / IEEE 1101.1
  IEC 60297-3-102 / IEEE 1101.10/11
  IEC 60297-3-103
- Ingress protection IP 20 in accordance with IEC 60529
- EMC testing in accordance with IEC 61587-3
- In accordance with VITA 1-1994 and VITA 1.1-1997

MEMBER VITA Open Standards, Open Markets

Areas of application

- Measurement, control and instrumentation technology
- Automation technology, machine monitoring
- Aerospace
- Defence technology
- Medical technology
- Test systems

oneclick

User manual and technical documentation at
www.schroff.biz/oneclick
Enter order number

Systems – VME, VME64x, VXS, VPX

Overview 8.88

Chassis and tower systems

- Standard systems from stock
- Individual configuration within 9 working days
- Robust mechanics, effective heat dissipation and EMC shielding

10002001

VME subrack systems

- 3 ... 8 U subrack systems, aluminium, silver
- With fan control module (FCM) for fan monitoring and control

VME subrack systems
3 U, 5 slot 8.90
4 U, 8 slot 8.91
7 U, 12 slot 8.92
8 U, 21 slot 8.93

10008001 10002007

VME64x subrack systems

- Subrack systems
  - 1, 2 U, steel, black (RAL 9005)
  - 3 ... 10 U, aluminium, silver
- With fan control module (FCM) for fan monitoring and control

VME64x subrack systems
1 U, 2 slot 8.95
2 U, 4 slot 8.96
4 U, 8 slot 8.97
7 U, 12 slot 8.98
8 U, 21 slot 8.99
10 U, 21 slot 8.100

10005004

VME64x

10006002

VXS

VME64x/VXS Tower systems

- Tower systems, aluminium, RAL 9006, RAL 7016
- With fan control module (FCM) for air monitoring and control
- Chassis suitable for use as a test system

VME64x tower systems
7 slot without rear I/O 8.101
7 slot with rear I/O 8.102

VXS tower system
7 slot with rear I/O 8.103

10011001

VPX case system

- Case system, 4 U, RAL 9006, RAL 7016
- Well suited as test system

VPX case system
4 U, 5 slot 8.104

30407004

ServicePLUS from page 8.114

e.g. individual configuration and assembly
e.g. modifications (integration)
e.g. downloads (CAD drawings, user manuals, test reports)
e.g. custom solutions

www.schroff.biz/ServicePLUS

ServicePLUS ... 8.114

Systems – VME subrack systems

3 U, 5 slot

10002004

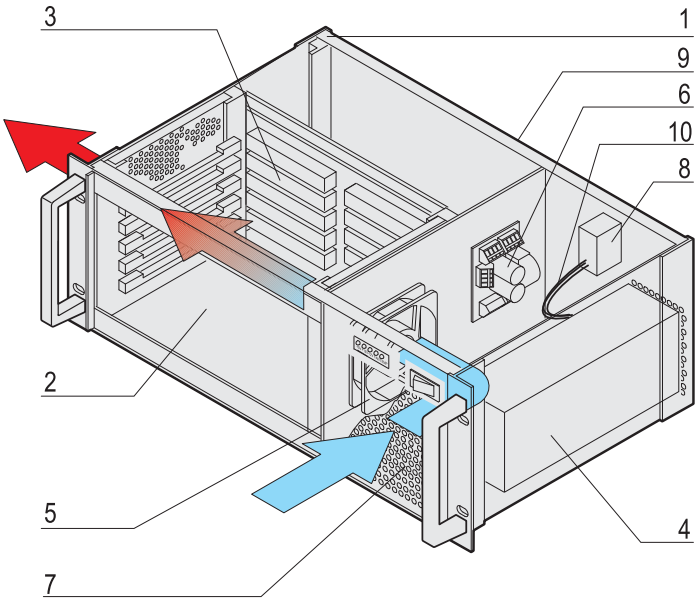

10002050

MEMBER VITA

30402059

ServicePLUS see page 8.114

- System for horizontal board mounting with board format
  – Front: 6 U, 160 mm deep
- Backplane VME
  – 5 slot, 6 U, J1/J2 monolithic
- PSU, open frame, 250 W
- Heat dissipation by 1 fan, from front to left; temperature-controlled by fan control module (FCM)
- Display module for DC operating voltages, fan and temperature alarm

Delivery comprises (completely assembled, wired and tested)

Item	Qty	Description
1	1	Shielded 19" chassis, Al, with perforated side panels and front handles (RAL 7016)
2	5	Front slot; IEEE guide rails, incl. ESD clips (ESD clips fitted to right), for horizontal board mounting (6 U, 160 mm deep)
3	1	Backplane VME for 6 U boards, 5 slots, J1/J2 monolithic (part no. 23001-065)
4	1	Power supply unit, open frame; 250 W (part no.11098-316)
5	1	Fan; temperature-dependent speed control
6	1	Fan control module (FCM) for fan monitoring/regulating (part no. 23207-021)
7	1	Front panel, perforated, 3 U; display module; mains switch
8	1	AC mains input (IEC 320-C14 plug), mains filter, mains fuse
9	1	Rear panel, Al
10	1	Cable harness to connect all system components

Order Information

Height U	Height mm	Depth mm	Number of slots	Part no.
3	132.55	277.5	5	20836-310

Accessories	
Equipment cables	Page 3.38
Front panels	Page 7.5
Modules to mount drive units	Page 8.110
Front panels with handle	Page 7.18
Fan control modules (FCM)	Page 8.108

Note

- Modified systems available on request
- System in accordance with IEC 60297-3-101, -102, -103; IEEE 1101.1, 1101.10/11;
  Backplane konform zu VITA 1.1-1994

Systems – VME subrack systems

4 U, 8 slot

10002001

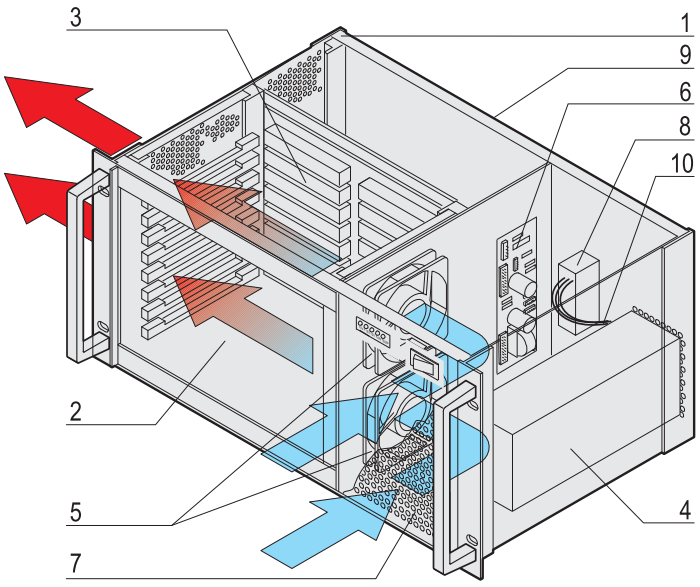

10006050

MEMBER VITA

30402059

service PLUS ServicePLUS see page 8.114

- System for horizontal board mounting with board format
  - Front: 6 U, 160 mm deep
- Backplane VME
  - 8 slot, 6 U, J1/J2 monolithic
- PSU, open frame, 444 W (400 W at < 180 V_{AC})
- Heat dissipation by 2 fans, from front to left; temperature-controlled by fan control module (FCM)
- Display module for DC operating voltages, fan and temperature alarm

Delivery comprises (completely assembled, wired and tested)

Item	Qty	Description
1	1	Shielded 19" chassis, Al, with perforated side panels; front handles (RAL 7016)
2	8	Front slot; IEEE guide rails, incl. ESD clips (ESD clips fitted to right), for horizontal board mounting (6 U, 160 mm deep)
3	1	Backplane VME for 6 U boards, 8 slots, J1/J2 monolithic (part no. **23001-068**)
4	1	Power supply unit, open frame; 444 W (400 W at < 180 V_{AC}; part no. **11098-267**)
5	2	Fan; temperature-dependent speed control
6	1	Fan control module (FCM) for fan monitoring/regulating (part no. **23207-021**)
7	1	Front panel, perforated, 4 U; display module; mains switch
8	1	AC mains input (IEC 320-C14 plug), mains filter, mains fuse
9	1	Rear panel, Al
10	1	Cable harness to connect all system components

Order Information

Height U	Height mm	Depth mm	Number of slots	Part no.
4	177	277.5	8	**20836-415**
Accessories				
Equipment cables				**Page 3.38**
Front panels				**Page 7.5**
Modules to mount drive units				**Page 8.110**
Front panels with handle				**Page 7.18**
Fan control modules (FCM)				**Page 8.108**

Note

- Modified systems available on request
- System in accordance with IEC 60297-3-101, -102, -103; IEEE 1101.1, 1101.10/11; Backplane konform zu VITA 1.1-1994

7 U, 12 slot

10002003

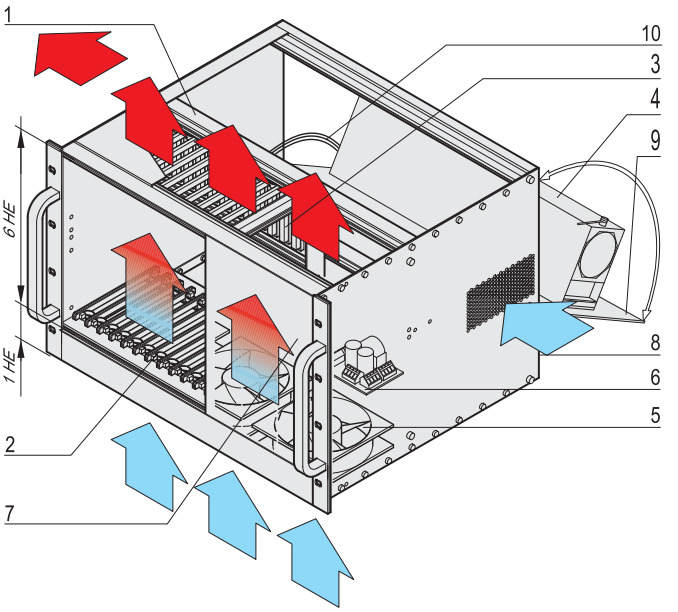

10002054

1 HE = 1 U

MEMBER VITA

30402059

ServicePLUS see page 8.114

- System for vertical board mounting with board format
  – Front: 6 U, 160 mm deep
- Backplane VME
  – 12 slot, 6 U, J1/J2 monolithic
- PSU, open frame, 444 W (400 W at < 180 V_{AC})
- Heat dissipation by pull-out hot-swap fan unit, from bottom to top; filter mat; temperature-controlled by fan control module (FCM)
- Display module for DC operating voltages, fan and temperature alarm

Delivery comprises (completely assembled, wired and tested)

Item	Qty	Description
1	1	Shielded 19" chassis, Al; 19" bracket, with plain top cover and base plate (RAL 9006); front handles (RAL 7016)
2	12	Front slot; IEEE guide rails, incl. ESD clips (ESD clips fitted to bottom front), for vertical board mounting (6 U, 160 mm deep)
3	1	Backplane VME for 6 U boards, 12 slots, J1/J2 monolithic (part no. **23001-072**)
4	1	Power supply unit, open frame; 444 W (400 W at < 180 V_{AC}; part no. **11098-267**)
5	1	Hot-swap fan tray with 3 fans, pull-out, 1 U; air filter; temperature-dependent speed control
6	1	Fan control module (FCM) for fan monitoring/regulating (part no. **23207-028**)
7	1	Front panel 6 U, 36 HP
8	1	AC mains input (IEC 320-C14 plug), mains filter, mains fuse, mains switch
9	1	Rear panel, hinged, Al, 6 U, 84 HP
10	1	Cable harness to connect all system components

Order Information

Height U	Height mm	Depth mm	Number of slots	Part no.
7 (1 + 6)	310.35	355	12	20836-715
Accessories				
Air filter consisting of filter holder and filter mat, PU 1 set				**24579-033**
Backplanes				**Page 10.15**
Equipment cables				**Page 3.38**
Front panels				**Page 7.5**
Modules to mount drive units				**Page 8.110**
Front panels with handle				**Page 7.18**
Fan control modules (FCM)				**Page 8.108**

Note

- Modified systems available on request
- System in accordance with IEC 60297-3-101, -102, -103; IEEE 1101.1, 1101.10/11;
  Backplane konform zu VITA 1.1-1994

Systems – VME subrack systems

7 U, 12 slot, for transition modules

10002002

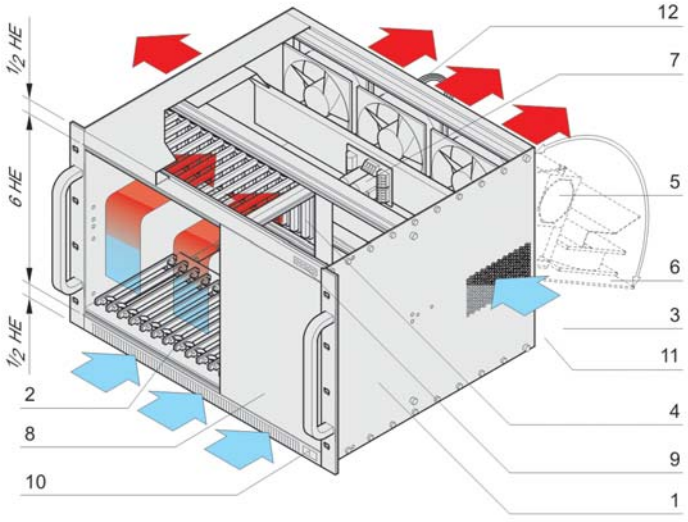

10002056

1 HE = 1 U

MEMBER VITA

30402059

ServicePLUS see page 8.114

- System for vertical board mounting with board formats
  - Front: 6 U, 160 mm deep
  - Rear: 6 U, 12 HP, 80 mm deep; for transition modules
- Backplane VME
  - 12 slot, 6 U, J1/J2 monolithic
- PSU, open frame, 444 W (400 W at < 180 V_{AC})
- Heat dissipation by 3 fans, from front to rear; temperature-controlled by fan control module (FCM)
- Display module for DC operating voltages, fan and temperature alarm

Delivery comprises (completely assembled, wired and tested)

Item	Qty	Description
1	1	Shielded 19" chassis, Al; 19" bracket, plain top cover and base plate (RAL 9006); front handles (RAL 7016)
2	12	Front slot; IEEE guide rails, incl. ESD clips (ESD clips fitted to bottom front), for vertical board mounting (6 U, 160 mm deep)
3	3	Rear slot; IEEE guide rails, incl. ESD clips (ESD clips fitted to bottom front), for vertical mounting of transition module (6 U, 80 mm deep) covered with EMC front panel 6 U / 12 HP
4	1	Backplane VME for 6 U boards, 12 slots, J1/J2 monolithic (part no. 23001-072)
5	1	Power supply unit, open frame; 444 W (400 W at < 180 V_{AC}; part no. 11098-267)
6	3	Fan; rear panel, hinged, 5 U, 84 HP; temperature-dependent speed control
7	1	Fan control module (FCM) for fan monitoring/regulating (part no. 23207-021)
8	1	Front panel 6 U, 36 HP
9	1	Display module
10	1	Mains switch
11	1	AC mains input (IEC 320-C14 plug), mains filter, mains fuse
12	1	Cable harness to connect all system components

Order Information

Height U	Height mm	Depth mm	Number of slots	Part no.
7 (1/2 + 6 + 1/2)	310.35	355	12	20836-716

Accessories	
Backplanes	Page 10.15
Equipment cables	Page 3.38
Front panels	Page 7.5
Modules to mount drive units	Page 8.110
Front panels with handle	Page 7.18
Fan control modules (FCM)	Page 8.108

Note

- Modified systems available on request
- System in accordance with IEC 60297-3-101, -102, -103; IEEE 1101.1, 1101.10/11; Backplane konform zu VITA 1.1-1994

8 U, 21 slot

10002005

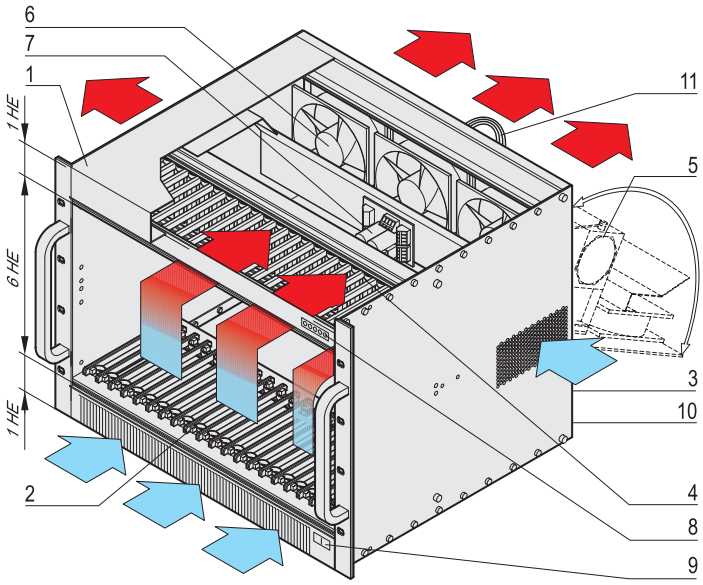

10002058

1 HE = 1 U

MEMBER VITA

30402059

ServicePLUS see page 8.114

- System for vertical board mounting with board formats
  - Front: 6 U, 160 mm deep
  - Rear: 6 U, 12 HP, 80 mm deep; for transition modules
- Backplane VME
  - 21 slot, 6 U, J1/J2 monolithic
- PSU, open frame, 744 W (600 W at < 180 V_{AC})
- Heat dissipation by 3 fans, from front to rear; temperature-controlled by fan control module (FCM)
- Display module for DC operating voltages, fan and temperature alarm

Delivery comprises (completely assembled, wired and tested)

Item	Qty	Description
1	1	Shielded 19" chassis, Al; 19" bracket, plain top cover and base plate (RAL 9006); front handles (RAL 7016)
2	21	Front slot; IEEE guide rails, incl. ESD clips (ESD clips fitted to bottom front), for vertical board mounting (6 U, 160 mm deep)
3	3	Rear slot; IEEE guide rails, incl. ESD clips (ESD clips fitted to bottom front), for vertical mounting of transition module (6 U, 80 mm deep) covered with EMC front panel 6 U/12 HP
4	1	Backplane VME for 6 U boards, 21 slots, J1/J2 monolithic (part no. 23001-081)
5	1	Power supply unit, open frame; 744 W (600 W at < 180 V_{AC}; part no. 11098-140)
6	3	Fan; rear panel, hinged, 5 U, 84 HP; temperature-dependent speed control
7	1	Fan control module (FCM) for fan monitoring/regulating (part no. 23207-021)
8	1	Display module
9	1	Mains switch
10	1	AC mains input (IEC 320-C14 plug), mains filter, mains fuse
11	1	Cable harness to connect all system components

Order Information

Height U	Height mm	Depth mm	Number of slots	Part no.
8 (1 + 6 + 1)	354.8	355	21	**20836-815**

Accessories	
Backplanes	Page 10.15
Equipment cables	Page 3.38
Front panels	Page 7.5
Modules to mount drive units	Page 8.110
Front panels with handle	Page 7.18
Fan control modules (FCM)	Page 8.108

Note

- Modified systems available on request
- System in accordance with IEC 60297-3-101, -102, -103; IEEE 1101.1, 1101.10/11; Backplane konform zu VITA 1.1-1994

System – VME64x subrack systems

1 U, 2 slot, with rear I/O

10005003

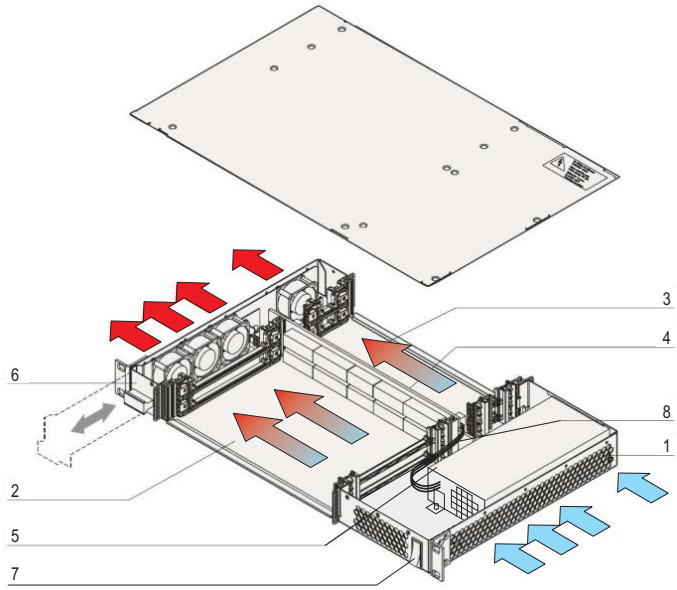

12304055

MEMBER VITA

30402059

ServicePLUS see page 8.114

- System for horizontal board mounting with board formats
  - Front: 6 U, 160 mm deep
  - Rear, rear I/O: 6 U, 80 mm deep
- Backplane VME64x
  - 2 slot, 6 U, with P0 plug
- ATX PSU, 250 W
- Heat dissipation by pull-out hot-swap fan unit, from right to left
- Fan monitoring and voltage display

Delivery comprises (completely assembled, wired and tested)

Item	Qty	Description
1	1	Shielded 19" chassis, steel plate, black powder-coated (RAL 9005)
2	2	Front slot; IEEE guide rails, incl. ESD clips (ESD clips fitted to right), for horizontal mounting of rear I/O boards (6 U, 160 mm deep)
3	2	Rear slot; IEEE guide rails, incl. ESD clips (ESD clips fitted to right), for horizontal mounting of rear I/O boards (6 U, 80 mm deep)
4	1	Backplane VME64x for 6 U boards, 2 slot, with P0 plug, with connector plug for fan unit and ATX PSU
5	1	ATX power supply; 250 W; wide range input 100 ... 240 V_{AC}, output 3.3 V/14 A, 5 V/23 A, 12 V/16 A, -12 V/0.5 A; with IEC connector; mains switch; fan
6	1	Hot-swap fan unit with 4 fans; incl. fan monitoring and voltage display
7	1	DC switch (with LED), switches off only the DC output of the power supply unit, power ON
8	1	Cable harness to connect all system components

Order Information

Height U	Height mm	Depth mm	Number of slots	Part no.
1	44.45	277.5	2	**20836-145**

Accessories	
Equipment cables	Page 3.38
Front panels	Page 7.5
Modules to mount drive units	Page 8.110
Front panels with handle	Page 7.18

Note

- Modified systems available on request
- System in accordance with IEC 60297-3-101, 102, 103; IEEE 1101.1, 1101.10/11; backplane conforms to VITA 1.1-1997

System – VME64x subrack systems

2 U, 4 slot, with rear I/O

10008001

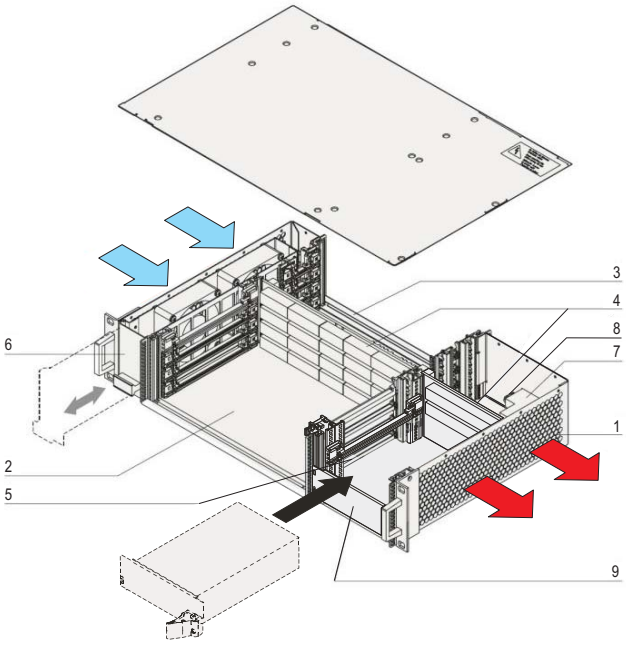

12304057

MEMBER VITA

30402059

ServicePLUS see page 8.114

- System for horizontal board mounting with board formats
  - Front: 6 U, 160 mm deep
  - Rear, rear I/O: 6 U, 80 mm deep
- Backplane VME64x
  - 4 slot, 6 U, with P0 plug
- Power backplane to PICMG 2.11 (P 47), prepared for installation of two 19" compatible PSUs, 250 W (3 U, 8 HP)
- Heat dissipation by pull-out hot-swap fan unit, from left to right
- Fan monitoring and voltage display

Delivery comprises (completely assembled, wired and tested)

Item	Qty	Description
1	1	Shielded 19" chassis, steel plate, black powder-coated (RAL 9005)
2	4	Front slot; IEEE guide rails, incl. ESD clips (ESD clips fitted to right), for horizontal mounting of rear I/O boards (6 U, 160 mm deep)
3	4	Rear slot; IEEE guide rails, incl. ESD clips (ESD clips fitted to right), for horizontal mounting of rear I/O boards (6 U, 80 mm deep)
4	1	Backplane VME64x for 6 U boards, 4 slots, with P0 plug (part no. 23001-534), power backplane, 2 x P47 plug (part no. 23098-115)
5	1	Installation space 3 U, 8 HP for two 19" compatible PSUs
6	1	Hot-swap fan unit with 2 fans (12 V_{DC}); incl. fan monitoring and voltage display
7	1	AC mains input module (IEC 320-C14 plug, mains filter, mains switch, mains fuse)
8	1	Cable harness to connect all system components
9	1	3 U, 8 HP front panel, front mounted

Order Information

Height U	Height mm	Depth mm	Number of slots	Part no.
2	88.1	277.5	4	20836-245
Accessories				
19" compatible power supply, 250 W, 3 U, 8 HP Technical data see page 9.22				**13100-141**
Equipment cables				**Page 3.38**
Front panels				**Page 7.5**
Modules to mount drive units				**Page 8.110**
Front panels with handle				**Page 7.18**

Note

- Modified systems available on request
- System in accordance with IEC 60297-3-101, 102, 103; IEEE 1101.1, 1101.10/11; backplane conforms to VITA 1.1-1997

System – VME64x subrack systems

4 U, 8 slot, with rear I/O

10002006

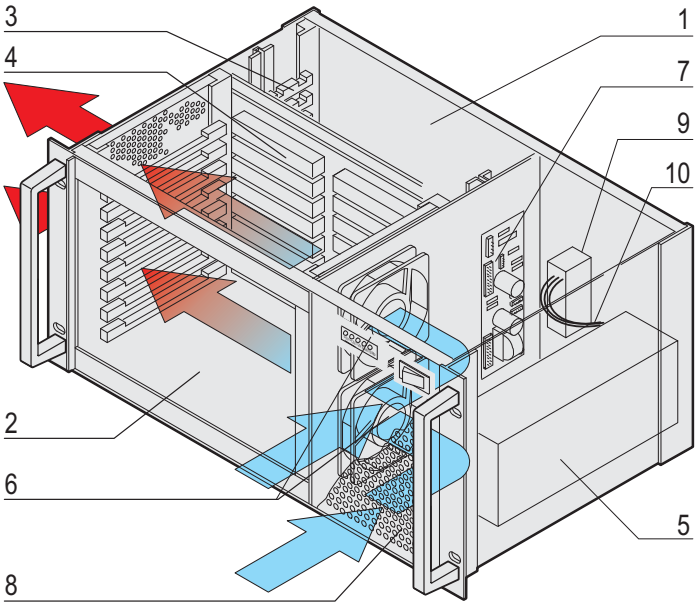

10002052

MEMBER VITA

30402059

ServicePLUS see page 8.114

- System for horizontal board mounting with board formats
  - Front: 6 U, 160 mm deep
  - Rear, rear I/O: 6 U, 80 mm deep
- Backplane VME64x
  - 8 slot, 6 U, without P0 plug
- PSU, open frame, 560 W (400 W at < 180 V_{AC})
- Heat dissipation by fan, from front to left
- Display module for DC operating voltages, fan and temperature alarm

Delivery comprises (completely assembled, wired and tested)

Item	Qty	Description
1	1	Shielded 19" chassis, Al, with perforated side panels and front handles (RAL 7016)
2	8	Front slot; IEEE guide rails, incl. ESD clips (ESD clips fitted to right), for horizontal mounting of rear I/O boards (6 U, 160 mm deep)
3	8	Rear slot; IEEE guide rails, incl. ESD clips (ESD clips fitted to right), for horizontal mounting of rear I/O boards (6 U, 80 mm deep)
4	1	Backplane VME64x for 6 U boards, 8 slots, without P0 plug (part no. **23001-508**)
5	1	Power supply unit, open frame; 560 W (400 W at < 180 V_{AC}; part no. **11098-212**)
6	2	Fan; temperature-dependent speed control
7	1	Fan control module (FCM) for fan monitoring/regulating (part no. **23207-021**)
8	1	Front panel with ventilation openings, 4 U; display module, mains switch
9	1	AC mains input (IEC 320-C14 plug), mains filter, mains fuse
10	1	Cable harness to connect all system components

Order Information

Height U	Height mm	Depth mm	Number of slots	Part no.
4	177	277.5	8	**20836-416**

Accessories	
Equipment cables	**Page 3.38**
Front panels	**Page 7.5**
Modules to mount drive units	**Page 8.110**
Front panels with handle	**Page 7.18**
Fan control modules (FCM)	**Page 8.108**

Note

- Modified systems available on request
- System in accordance with IEC 60297-3-101, 102, 103; IEEE 1101.1, 1101.10/11; backplane conforms to VITA 1.1-1997

System – VME64x subrack systems

7 U, 12 slot, with rear I/O

10002007

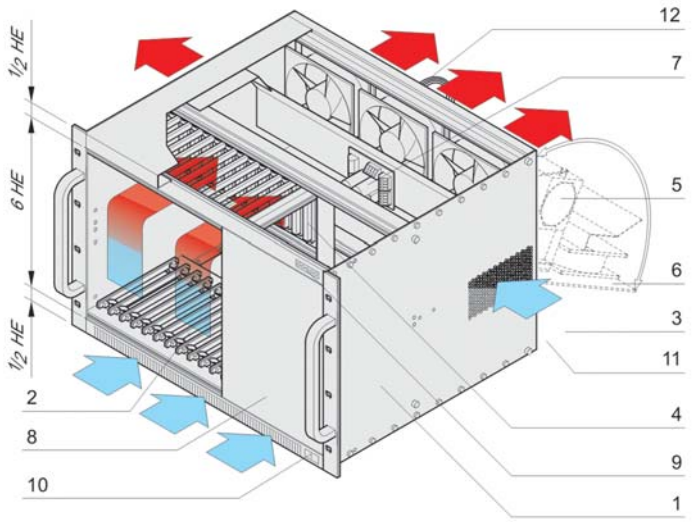

10002056

1 HE = 1 U

MEMBER VITA

30402059

ServicePLUS see page 8.114

- System for vertical board mounting with board formats
  - Front: 6 U, 160 mm deep
  - Rear: 6 U, for 3 transition modules
- Backplane VME64x
  - 12 slot, 6 U, without P0 plug
- PSU, open frame, 642 W (600 W at < 180 V_{AC})
- Heat dissipation by fan, from front to rear
- Display module for DC operating voltages, fan and temperature alarm

Delivery comprises (completely assembled, wired and tested)

Item	Qty	Description
1	1	Shielded 19" chassis, Al; with plain top cover and base plate (RAL 9006); front handle (RAL 7016); 19" bracket
2	12	Front slot; IEEE guide rails, incl. ESD clips (ESD clips fitted to bottom front), for vertical board mounting (6 U, 160 mm deep)
3	3	Rear slot; for transition modules, for vertical board mounting (6 U, 4 HP)
4	1	Backplane VME64x for 6 U boards, 12 slots, without P0 plug (part no. 23001-512)
5	1	Power supply unit, open frame; 642 W (600 W at < 180 V_{AC}; part no. 11098-207)
6	3	Fan; on hinged rear panel; speed control 5 U, 84 HP
7	1	Fan control module (FCM) for fan monitoring/regulating (part no. 23207-021)
8	1	Front panel 6 U, 36 HP;
9	1	Display module
10	1	Mains switch
11	1	AC mains input (IEC 320-C14 plug), mains filter, mains fuse
12	1	Front panel at rear with textile EMC gasket, 6 U, 12 HP
13	1	Cable harness to connect all system components

Order Information

Height U	Height mm	Depth mm	Number of slots	Part no.
7 (1/2+6+1/2)	310.35	355	12	**20836-717**
Accessories				
Equipment cables				**Page 3.38**
Front panels				**Page 7.5**
Modules to mount drive units				**Page 8.110**
Front panels with handle				**Page 7.18**
Fan control modules (FCM)				**Page 8.108**

Note

- Modified systems available on request
- System in accordance with IEC 60297-3-101, 102, 103; IEEE 1101.1, 1101.10/11; backplane conforms to VITA 1.1-1997

System – VME64x subrack systems

8 U, 21 slot, with rear I/O

10005001

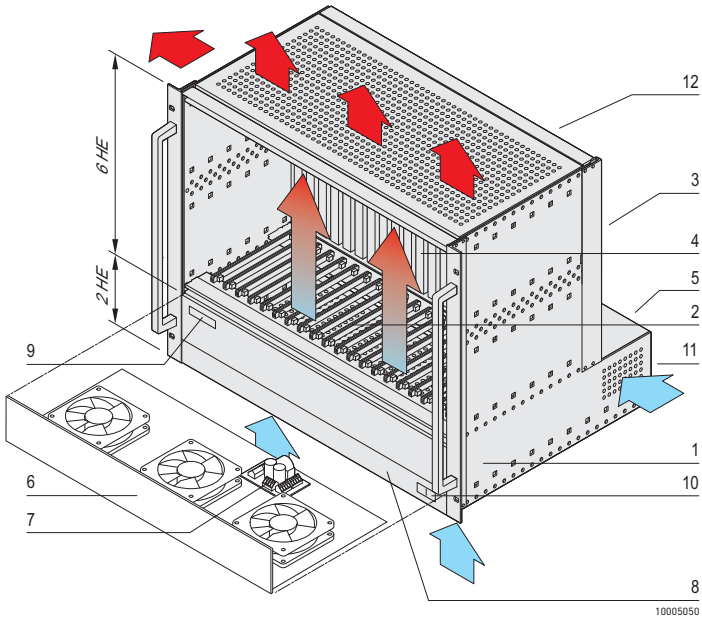

10005050

1 HE = 1 U

MEMBER VITA

30402059

ServicePLUS see page 8.114

- System for vertical board mounting with board formats
  - Front: 6 U, 160 mm deep
  - Rear, rear I/O: 6 U, 80 mm deep
- Backplane VME64x
  - 21 slot, 6 U, with P0 plug
- PSU, open frame, 642 W (600 W at < 180 V_{AC})
- Heat dissipation by pull-out fan unit, from bottom to top; temperature-controlled by fan control module (FCM)
- Display module for DC operating voltages, fan and temperature alarm

Delivery comprises (completely assembled, wired and tested)

Item	Qty	Description
1	1	Shielded 19" chassis, Al, with perforated top cover and base plate; front handles (RAL 7016), 19" bracket, front panels (RAL 9006)
2	21	Front slot; IEEE guide rails, incl. ESD clips (ESD clips fitted to bottom), for vertical board mounting (6 U, 160 mm deep)
3	21	Rear slot; IEEE guide rails, incl. ESD clips (ESD clips fitted to bottom), for vertical mounting of rear I/O boards (6 U, 80 mm deep)
4	1	Backplane VME64x for 6 U boards, 21 slots, with P0 plug (part no. **23001-551**)
5	1	Power supply unit, open frame; 642 W (600 W at< 180 V_{AC}; part no. **11098-207**)
6	1	Fan unit with 3 fans, 1.5 U (24 V_{DC}, 250 m³/h each, 148 cfm); temperature-dependent speed control; filter mat
7	1	Fan control module (FCM) for fan monitoring/regulating (part no. **23207-028**)
8	1	Front panel 0,5 U, 84 HP;
9	1	Display module
10	1	Mains switch
11	1	AC mains input (IEC 320-C14 plug), mains filter, mains fuse
12	1	Cable harness to connect all system components

Order Information

Height U	Height mm	Depth mm	Number of slots	Part no.
8	354.8	412	21	20836-820

Accessories	
Equipment cables	Page 3.38
Front panels	Page 7.5
Modules to mount drive units	Page 8.110
Front panels with handle	Page 7.18
Fan control modules (FCM)	Page 8.108

Note

- Modified systems available on request
- System in accordance with IEC 60297-3-101, 102, 103; IEEE 1101.1, 1101.10/11; backplane conforms to VITA 1.1-1997

System – VME64x subrack systems

10 U, 21 slot, with rear I/O

10002010

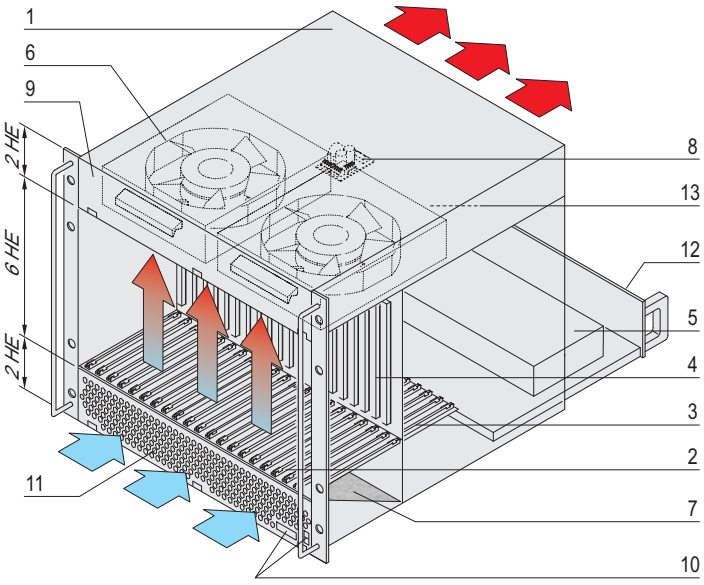

10002060

1 HE = 1 U

MEMBER VITA

30402059

ServicePLUS see page 8.114

- System for vertical board mounting with board formats
  - Front: 6 U, 160 mm deep
  - Rear, rear I/O: 6 U, 80 mm deep
- Backplane VME64x
  - 21 slot, 6+1 U, with P0 plug
- PSU, open frame, 1000 W
- Heat dissipation by 2 pull-out fan units, from front to rear; temperature-controlled by fan control module (FCM)
- Display module for DC operating voltages, fan and temperature alarm

Delivery comprises (completely assembled, wired and tested)

Item	Qty	Description
1	1	Shielded 19" chassis, Al, with plain top cover and base plate; front handles (RAL 7016), 19" bracket, front panels (RAL 9006)
2	21	Front slot; IEEE guide rails, incl. ESD clips (ESD clips fitted to bottom), for vertical board mounting (6 U, 160 mm deep)
3	21	Rear slot; IEEE guide rails, incl. ESD clips (ESD clips fitted to bottom), for vertical mounting of rear I/O boards (6 U, 80 mm deep)
4	1	VME64x backplane for 6 U boards + 1 U, 21 slots, with P0 connector
5	1	Power supply unit, open frame; 1000 W; wide range input, 100 ... 240 V_{AC} output 3.3 V/60 A, 5 V/120 A, 12 V/17 A, -12 V/17 A; mounted fan
6	2	Fan module with speed-controlled radial fan (500 m³/h = 295 cfm each) for ventilation of boards; mounted behind hinged front panel (2 U)
7	1	Air filter
8	1	Fan control module (FCM) for fan monitoring/regulating (part no. 23207-021)
9	1	Front panel, hinged, 2 U, 84 HP
10	1	Display module; mains switch, DC
11	1	Front panel, hinged, perforated, 2 U, 84 HP
12	1	AC mains input (IEC 320-C14 plug), mains filter, mains fuse
13	1	Cable harness to connect all system components

Order Information

Height U	Height mm	Depth mm	Number of slots	Part no.
10	443.7	456.5	21	**20836-220**
Accessories				
Fan module 1 piece				20836-855
Chassis Monitoring Module (CMM) for monitoring of voltage, temperature and digital inputs, 1 kit				20836-223
Equipment cables				**Page 3.38**
Front panels				**Page 7.5**
Modules to mount drive units				**Page 8.110**
Front panels with handle				**Page 7.18**
Fan control modules (FCM)				**Page 8.108**

Note

- Modified systems available on request
- System in accordance with IEC 60297-3-101, 102, 103; IEEE 1101.1, 1101.10/11; backplane conforms to VITA 1.1-1997

System – VME64x Tower systems

7 slot, without rear I/O

10005002

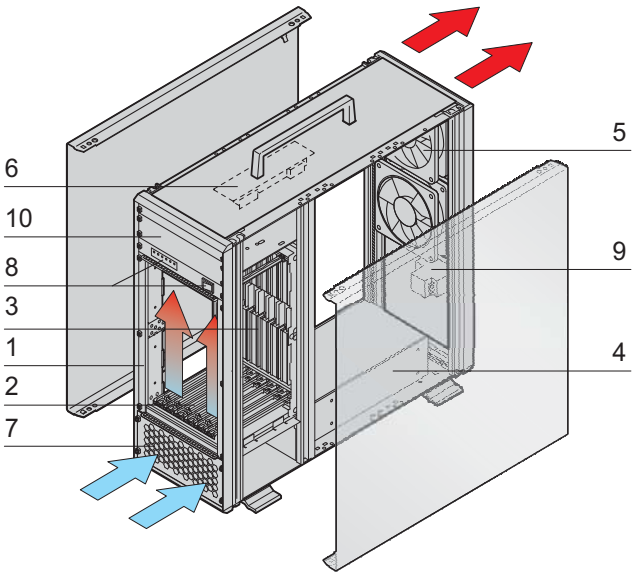

10006054

MEMBER VITA

30402059

ServicePLUS see page 8.114

- Tower system for vertical board mounting with board format
  - Front: 6 U, 160 mm deep
- Backplane VME64x
  - 7 slot, 6 U, without P0 plug
- PSU, open frame, 560 W (400 W at < 180 V_{AC})
- Heat dissipation by 2 fans, from front to rear; temperature-controlled with fan control module (FCM)
- Display module for DC operating voltages and fan alarm
- Option to mount a 5.25" DVD drive unit

Delivery comprises (completely assembled, wired and tested)

Item	Qty	Description
1	1	Tower system based on ratiopacPRO case, shielded, 500 mm deep, lateral parts in RAL 9006; handle, front frame and feet in RAL 7016
2	7	Front slot; IEEE guide rails, incl. ESD clips (ESD clips fitted to bottom), for vertical board mounting (6 U, 160 mm deep)
3	1	Backplane VME64x for 6 U boards, 7 slots, without P0 plug (part no. **23001-507**)
4	1	Power supply unit, open frame; 560 W (400 W at < 180 V_{AC}; part no. **11098-212**)
5	2	Fan; speed-controlled; for ventilation of boards
6	1	Fan control module (FCM) for fan monitoring/regulating (part no. **23207-021**)
7	1	Front panel, perforated, 4 U
8	1	Display module; mains switch
9	1	AC mains input (IEC 320-C14 plug), mains filter, mains fuse
10	1	Module to accomodate a 5.25" DVD drive unit
11	1	Cable harness to connect all system components

Order Information

Height mm	Width mm	Depth mm	Number of slots	Part no.
496.25	177.00	500	7	10836-050
Accessories				
Equipment cables				**Page 3.38**
Front panels				**Page 7.5**
Modules to mount drive units				**Page 8.110**
Front panels with handle				**Page 7.18**
Fan control modules (FCM)				**Page 8.108**

Note

- Modified systems available on request
- System in accordance with IEC 60297-3-101, 102, 103; IEEE 1101.1, 1101.10/11; backplane conforms to VITA 1.1-1997

System – VME64x Tower systems

7 slot, with rear I/O

10005004

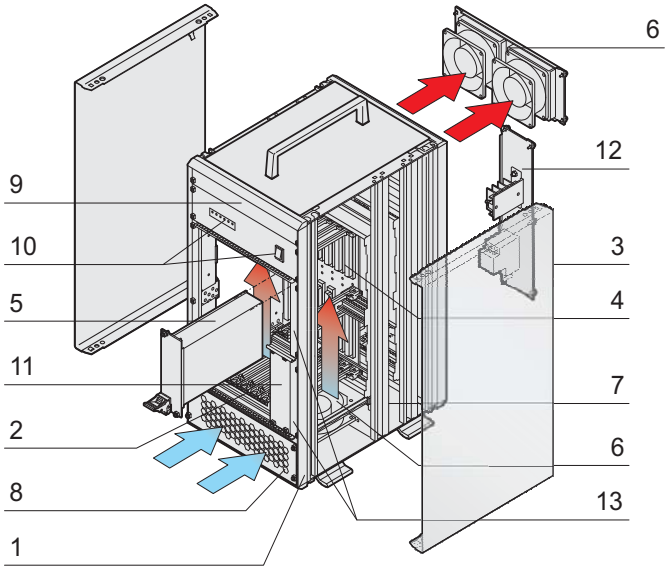

10006052

MEMBER VITA

30402059

ServicePLUS see page 8.114

- Tower system for vertical board mounting with board formats
  - Front: 6 U, 160 mm deep
  - Rear, rear I/O: 6 U, 80 mm deep
- Backplane VME64x
  - 7 slot, 6 U, without P0 plug
- PSU, 19" compatible, 250 W;
  a second PSU can optionally be fitted
- Heat dissipation by 4 fans, from front to rear;
  temperature-controlled with fan control module (FCM)
- Display module for DC operating voltages and fan and temperature alarm
- Option to mount a 5.25" DVD drive unit

Delivery comprises (completely assembled, wired and tested)

Item	Qty	Description
1	1	Tower system based on ratiopacPRO case, shielded, 300 mm deep, lateral parts in RAL 9006; handle, front frame and feet in RAL 7016
2	7	Front slot; IEEE guide rails, incl. ESD clips (ESD clips fitted to bottom), for vertical board mounting (6 U, 160 mm deep)
3	7	Rear slot; IEEE guide rails, incl. ESD clips (ESD clips fitted to bottom), for vertical mounting of rear I/O boards (6 U, 80 mm deep)
4	1	VME64x backplane for 6 U boards, 7 slots, without P0 connector
5	1	19" compatible power supply, 250 W (3 U, 8 HP; part no. 13100-141)
6	4	Fan; speed-controlled; for ventilation of boards
7	1	Fan control module (FCM) for fan monitoring/regulating (part no. 23207-021)
8	1	Front panel, perforated, 5 U
9	1	Module to accomodate a 5.25" DVD drive unit
10	1	Display module; mains switch
11	1	Front panel 3 U, 8 HP; removable, to allow fitting of a further chassis power supply unit
12	1	AC mains input (IEC 320-C14 plug), mains filter, mains fuse
13	2	Front panel 3 U, 4 HP;
14	1	Cable harness to connect all system components

Order Information

Height mm	Width mm	Depth mm	Number of slots	Part no.
496.25	221.45	300	7	**10836-045**
Accessories				
19" compatible power supply, 250 W, 3 U, 8 HP 1 piece, technical data see page 9.22				**13100-141**
Air filter kit 1 piece				20836-235
Equipment cables				**Page 3.38**
Front panels				**Page 7.5**
Modules to mount drive units				**Page 8.110**
Front panels with handle				**Page 7.18**
Fan control modules (FCM)				**Page 8.108**

Note

- Modified systems available on request
- System in accordance with IEC 60297-3-101, 102, 103; IEEE 1101.1, 1101.10/11; backplane conforms to VITA 1.1-1997

Systems – VXS (VITA 41) Tower systems

7 slot, with rear I/O

10006002

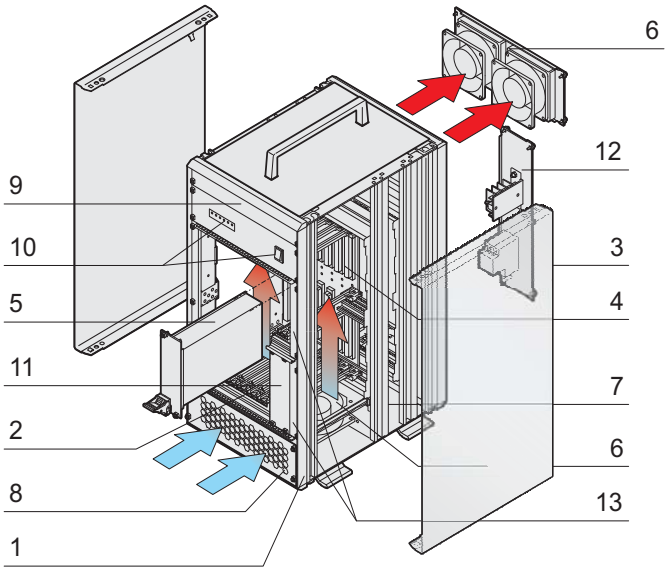

10006052

VXS

30407001

ServicePLUS see page 8.114

- Tower system for vertical board mounting with board formats
  - Front: 6 U, 160 mm deep
  - Rear, rear I/O: 6 U, 80 mm deep
- Backplane VXS/VME64x
  - 4 slot VME64x, 6 U, with P0 plug
  - 3 x VXS payload slots connected as ring
- PSU, 19" compatible, 250 W;
  a second PSU can optionally be fitted
- Heat dissipation by 4 fans, from front to rear;
  temperature-controlled with fan control module (FCM)
- Display module for DC operating voltages and fan and temperature alarm
- Option of fitting a 5.25" DVD drive unit

Delivery comprises (completely assembled, wired and tested)

Item	Qty	Description
1	1	Tower system based on ratiopacPRO case, shielded, 300 mm deep, lateral parts in RAL 9006; handle, front frame and feet in RAL 7016
2	7	Front slot; IEEE guide rails, incl. ESD clips (ESD clips fitted to bottom), for vertical board mounting (6 U, 160 mm deep)
3	7	Rear slot; IEEE guide rails, incl. ESD clips (ESD clips fitted to bottom), for vertical mounting of rear I/O boards (6 U, 80 mm deep)
4	1	VXS backplane, 3 slots VME64x, 4 slot; for 6 U boards; with P0 connector; 3 x VXS payload slots, ring connected (part no. **23001-701**)
5	1	19" compatible power supply, 250 W (3 U, 8 HP; part no. **13100-141**)
6	4	Fan; speed-controlled; for ventilation of boards
7	1	Fan control module (FCM) for fan monitoring/regulating (part no. **23207-021**)
8	1	Front panel, perforated, 5 U
9	1	Module to accomodate a 5.25" DVD drive unit
10	1	Display module; mains switch
11	1	Front panel 3 U, 8 HP; for fitting a further plug-in power supply
12	1	AC mains input (IEC 320-C14 plug), mains filter, mains fuse
13	2	Front panel 3 U, 4 HP;
14	1	Cable harness to connect all system components

Order Information

Height mm	Width mm	Depth mm	Number of slots	Part no.
496.25	221.45	300	7	10836-060
Accessories				
19" compatible power supply, 250 W, 3 U, 8 HP 1 piece, technical data page 9.22				**13100-141**
Air filter kit 1 piece				20836-235
Equipment cables				**Page 3.38**
Front panels				**Page 7.5**
Modules to mount drive units				**Page 8.110**
Front panels with handle				**Page 7.18**

Note

- Modified systems available on request
- System in accordance with IEC 60297-3-101, -102, -103; IEEE 1101.1, 1101.10/11;
- Backplane, conforms to VITA 41.0, -41.1, -41.10, -41.11

Systems – VPX case systems

VPX case system, 4 U, 5 slots, with/without rear I/O

10011001

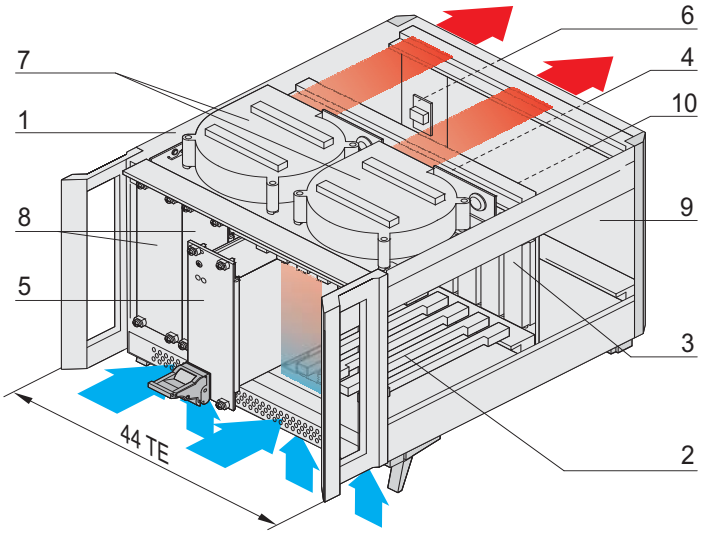

10011050

MEMBER VITA
Open Standards, Open Markets

- System for vertical board mounting with board format 3 U, 160 mm deep
- VPX backplane, in accordance with VITA 46, 5 slot, 3 U, 0.8" pitch, full mesh topology
- 19" PSU, 250 W, 3 U, 8 HP (further PSU optional)
- Heat dissipation by 2 radial fans, from front to rear

NEW

Delivery comprises (completely assembled, wired and tested)

Item	Qty	Description
1	1	ratiopacPRO-air case, RAL 9006, shielded, perforated air inlet/exhaust openings front and rear; front handles RAL 7016
2	5	Front slot; IEEE guide rails, incl. ESD clips (ESD clips fitted to bottom front), for vertical board mounting (3 U, 160 mm deep)
2a	5	Slot at rear (only with rear I/O version): IEEE guide rails, incl. ESD clips (ESD clips assembled at bottom), for vertical rear I/O boards (3 U, 80 mm deep)
3	1	Backplane for 3 U boards; 5 slot VPX, full mesh topology
4	1	Power backplane, 3 U, 8 HP with 2 x P47 connector
5	1	19" compatible power supply, 250 W (3 U, 8 HP; part no. 13100-141)
6	1	AC input module, rear, 3 U, 8 HP 110 ... 250 V_{AC}, 50 ... 60 HZ, max. current 10 A; AC line filter, switch, fuse
7	2	Radial fan, 36 m^3/h each, free blowing
8	2	Front panel, front, 3 U, 8 HP
9	1	Front panel, rear, 3 U, 36 HP
10	1	Cable harness to connect all system components

Order Information

Height U	Height mm	Width HP	Depth mm	Number of slots	Version	Part no.
4	177	44	275	5	Without rear I/O	**20836-444**
4	177	44	275	5	With rear I/O	20836-447

Accessories	
Equipment cables	Page 3.38
Front panels	Page 7.5
Modules to mount drive units	Page 8.108
Front panels with handle	Page 7.18
Fan control modules (FCM)	Page 8.106

Note

- Modified systems available on request

Systems – VPX case systems

Systems – embedded COM systems

Embedded test systems for COMe type 6

13017006

- Embedded system with x86 COM Express type 6 module
- A variety of interfaces, such as PCIe, mPCIe, USB, DisplayPort and XMC slot
- Internal interfaces for additional boards to enhance functionality, e.g. for fieldbus interfaces or TFT connector
- Slot for an XMC module
- With the prototype module available as an accessory, you have access to various signals such as GPI/O, I²C, etc.
- Power logic designed as plug-in module, 18 to 26.4 V_{DC} input, can be replaced easily
- Excellent modular cooling solution, can be easily adapted to different processor performance levels and environmental conditions

Delivery includes (completely assembled, cabled and tested)

Item	Qty.	Description
1	1	Shielded enclosure, St, powder-coated, black, RAL 9005
2	1	Heat sinks, cooling without fans
3	1	COM carrier
4	1	Type 6 Basic module with Intel® Core™ i7-6820EQ quad core processor; 8 GB DDR4-SODIMM-2400
5	1	120 GB SSD hard drive
6	1	Conversion kit for the installation of Compact, Basic or Mini COM Express modules
7	1	XMC cover
8	1	Fan for XMC module

Order Information

Description	Part no.
Embedded COM System with congatec conga-TS170/i7-6820EQ (045900) COM Express Type 6 Basic module with Intel® Core™ i7-6820EQ quad core processor with 2.8 GHz up to 3.5 GHz, 8 MB L2 cache, GT2 graphics and 2133 MT/s dual channel DDR4 memory interface, Chipset QM170	**21265-030**
Accessories	
Table power supply, 120 W, 100 to 240 V_{AC}, 20 V_{DC}/6 A, 1 piece	
Table power supply, 90 W, 100 to 240 V_{AC}, 19 V_{DC}/4.74 A, 1 piece	
Mains cable, SCHUKO/UTE SCHUKO/UTE plug, IEC 60320 socket, 2.5 m, 1 piece	**62150-191**
Mains cable, BS British Standard plug, IEC 60320 C13 socket, 2.5 m, 1 piece	**60103-137**
Equipment cable USA USA connector, IEC 60320 female connector, 2 m, 1 piece	**60103-141**
Mains cable, IEC IEC 60320 C14 plug, IEC 60320 C13 socket, 2.5 m, 1 piece	**60197-053**
Table stand for embedded COM system 1 piece	
Wall mount set for embedded COM system 1 piece	
Vesa mount for embedded COM system 1 piece	
Postcode module 1 piece	
Prototype module 1 piece	
Ethernet module 1 x GbE, 1 piece	
LVDS module 1 piece	

Systems – embedded COM systems

Embedded test systems for COMe type 6

Technical data

Enclosure: Width x height x depth	375.5 mm x 44.45 mm (without heat sink) x 250 mm
Cooling	Fanless (COM module), 40 mm fan (XMC), heat sink - large
Input voltage	18 to 26.4 V_{DC}
Hard-drive mount	1 x 2.5"
Hard drive	120 GB S-ATA SSD
COM module	Type 6 Basic module with Intel® Core™ i7-6820EQ quad core processor; 8 GB DDR4-SODIMM-2400
Internal interfaces	PCIe x4 slots: 1 (PCIe Gen 3) mPCIe slots: 1 (PCIe Gen 3) mPCIe / mSATA slots: 1 (PCIe Gen 3, S-ATA 3.0) S-ATA connector: 3 (S-ATA 3.0) Memory card slot: 1 (MicroSD) SIMM slot: 2 (Micro SIMM) Serial port: 2 Parallel port: 1 PS/2 mouse and keyboard connector: 1 Speaker: 1 LVDS module adapter: 1 Fieldbus module connector: 1 Interface for POST code display: 1 Prototype board interface: 1 XMC module slots: 1 XMC I/O signal header: 1
External interfaces	Front: DisplayPort: 2 (DP 1.1 and DP 1.2) DVI: 1 (DVI-D) USB: 4 (USB 3.0) Audio: 1 (HD Audio, S/PDIF Optical) Ethernet: 1 (10/100/1000 Mbps) Rear side: VGA: 1 Serial port: 1 (DSUB9) Power supply: 1 (18 to 26.4 V_{DC})

Note

- Other configurations available on request

Systems – embedded COM systems

Embedded systems, COMe type 6

13017002

Frontansicht (21265-010)

13017005

Frontansicht (21265-020)

- Embedded system with x86 COM Express type 6 module
- A variety of interfaces, such as PCIe, mPCIe, USB, DisplayPort
- Internal interfaces for additional boards to enhance functionality, e.g. for fieldbus interfaces or TFT connector
- Power logic designed as plug-in module, 18 to 26.4 V_{DC} input, can be replaced easily
- Excellent modular cooling solution, can be easily adapted to different processor performance levels and environmental conditions

Delivery includes (completely assembled, cabled and tested)

Item	Qty.	Description
1	1	Shielded enclosure, St, powder-coated, black, RAL 9005
2	1	Heat sinks, cooling without fans
3	1	COM carrier
4a	1	21265-010: Type 6 Compact module with Intel® Celeron® 3955U quad core processor; 4 GB DDR4-SODIMM-2400
4b	1	21265-020: Type 6 Basic module with Intel® Core™ i7-6820EQ quad core processor; 8 GB DDR4-SODIMM-2400
5	1	120 GB SSD hard drive
6	1	Conversion kit for the installation of Compact, Basic or Mini COM Express modules

Order Information

Description	Part no.
Embedded COM System with congatec conga-TC170/3955U (045203) COM Express Type 6 Compact module with Intel® Celeron® 3955U dual core processor with 2.0 GHz, 2 MB L2 cache and 2133 MT/s dual channel DDR4 memory interface	21265-010
Embedded COM System with congatec conga-TS170/i7-6820EQ (045900) COM Express Type 6 Basic module with Intel® Core™ i7-6820EQ quad core processor with 2.8 GHz up to 3.5 GHz, 8 MB L2 cache, GT2 graphics and 2133 MT/s dual channel DDR4 memory interface, Chipset QM170	21265-020
Accessories	
Table power supply, 120 W, 100 to 240 V_{AC}, 20 V_{DC}/6 A, 1 piece	
Table power supply, 90 W, 100 to 240 V_{AC}, 19 V_{DC}/4.74 A, 1 piece	
Mains cable, SCHUKO/UTE SCHUKO/UTE plug, IEC 60320 socket, 2.5 m, 1 piece	62150-191
Mains cable, BS British Standard plug, IEC 60320 C13 socket, 2.5 m, 1 piece	60103-137
Equipment cable USA USA connector, IEC 60320 female connector, 2 m, 1 piece	60103-141
Mains cable, IEC IEC 60320 C14 plug, IEC 60320 C13 socket, 2.5 m, 1 piece	60197-053
Table stand for embedded COM system 1 piece	
Wall mount set for embedded COM system 1 piece	
Vesa mount for embedded COM system 1 piece	
Postcode module 1 piece	
Prototype module 1 piece	
Ethernet module 1 x GbE, 1 piece	
LVDS module 1 piece	

Systems – embedded COM systems

Embedded systems, COMe type 6

Technical data

Order No.	21265-010	21265-020
Enclosure: Width x height x depth	250 mm x 44.45 mm (without heat sink) x 250 mm	250 mm x 44.45 mm (without heat sink) x 250 mm
Cooling	Fanless, heat sink - mid size	Fanless, heat sink - large
Input voltage	18 to 26.4 V_{DC}	18 to 26.4 V_{DC}
Hard-drive mount	1 x 2.5"	1 x 2.5"
Hard drive	120 GB S-ATA SSD	120 GB S-ATA SSD
COM module	Type 6 Compact module with Intel® Celeron® 3955U dual core processor; 4 GB DDR4-SODIMM-2400	Type 6 Basic module with Intel® Core™ i7-6820EQ quad core processor; 8 GB DDR4-SODIMM-24000
Internal interfaces	PCIe x4 slots: 1 (PCIe Gen 3) mPCIe slots: 1 (PCIe Gen 3) mPCIe / mSATA slots: 1 (PCIe Gen 3, S-ATA 3.0) S-ATA connector: 3 (S-ATA 3.0) Memory card slot: 1 (MicroSD) SIMM slot: 2 (Micro SIMM) Serial port: 2 Parallel port: 1 PS/2 mouse and keyboard connector: 1 Speaker: 1 LVDS module adapter: 1 Fieldbus module connector: 1 Interface for POST code display: 1 Prototype board interface: 0 XMC module slots: 0 XMC I/O signal header: 0	PCIe x4 slots: 1 (PCIe Gen 3) mPCIe slots: 1 (PCIe Gen 3) mPCIe / mSATA slots: 1 (PCIe Gen 3, S-ATA 3.0) S-ATA connector: 3 (S-ATA 3.0) Memory card slot: 1 (MicroSD) SIMM slot: 2 (Micro SIMM) Serial port: 2 Parallel port: 1 PS/2 mouse and keyboard connector: 1 Speaker: 1 LVDS module adapter: 1 Fieldbus module connector: 1 Interface for POST code display: 1 Prototype board interface: 0 XMC module slots: 0 XMC I/O signal header: 0
External interfaces	Front: DisplayPort: 2 (DP 1.1 and DP 1.2) DVI: 1 (DVI-D) USB: 4 (USB 3.0) Audio: 1 (HD Audio, S/PDIF Optical) Ethernet: 1 (10/100/1000 Mbps) Rear side: VGA: 1 Serial port: 1 (DSUB9) Power supply: 1 (18 to 26.4 V_{DC})	Front: DisplayPort: 2 (DP 1.1 and DP 1.2) DVI: 1 (DVI-D) USB: 4 (USB 3.0) Audio: 1 (HD Audio, S/PDIF Optical) Ethernet: 1 (10/100/1000 Mbps) Rear side: VGA: 1 Serial port: 1 (DSUB9) Power supply: 1 (18 to 26.4 V_{DC})

Note

- Other configurations available on request

Fan control module (FCM2)

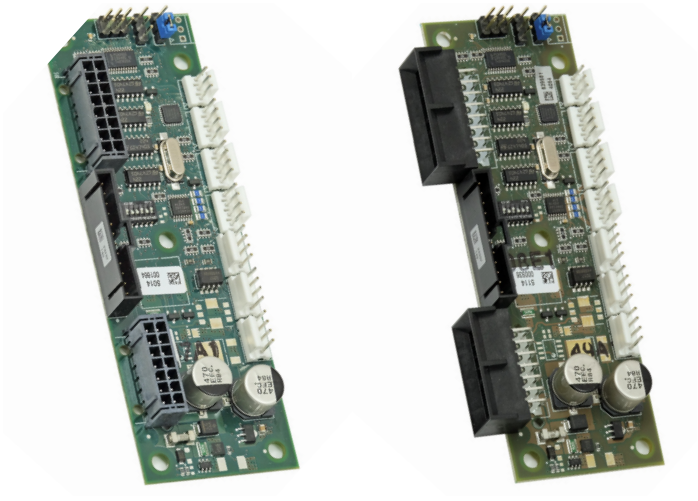

12102002 12109001

FCM with straight connector FCM with angled connector

- The fan control module (FCM2) is a standalone fan controller for 12 V fans
- Up to 6 fans can be monitored and controlled
- Signal monitoring of up to 6 temperature sensors
- Monitoring of 3.3 V, 5 V, 12 V and -12 V voltages
- FCM2 supply voltage: 12 V
- Can control status LEDs for Over Temp, Fan Fail, 3.3 V, 5 V, 12 V and -12 V
- In case of overheating or the failure of a fan, the other fans can be set to full speed
- Status information can be queried via a I²C interface
- Suitable for a 4 wire fan with PWM or control voltage input
- With straight or angled connector plug

Delivery includes

Item	Qty.	Description
1	1	Fan control module (FCM2), width 40 mm, depth 119 mm, height 15 mm

Order Information

Description	Height mm	Width mm	Depth mm	Part no.
Connector plug, straight	15	40	119	23207-160
Connector plug, angled (90°), for mounting on pull-out Schroff fan unit	15	40	119	23207-162
Accessories				
Temperature sensor for FCM2 Cable length 400 mm, with insulation displacement connector suitable for J12 on FCM2, 1 piece				23204-882

Block diagram inputs and outputs

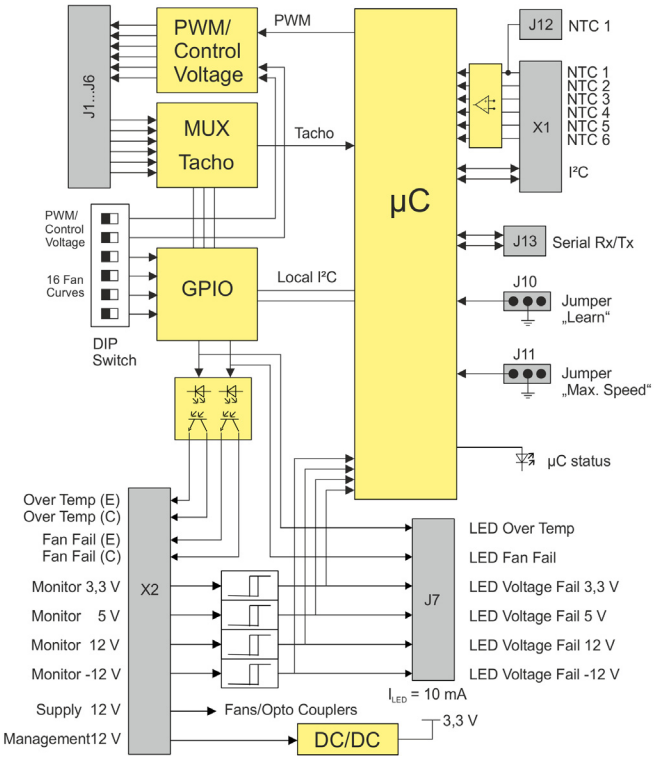

09802052

Speed characteristics inputs and outputs

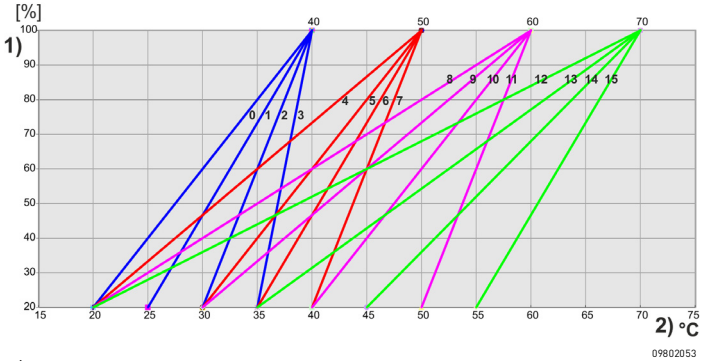

09802053

1) Pulse-width modulation;
2) temperature;
0 ... 15 Setting with 4 bit DIP switches

Systems – Accessories

Chassis monitoring module (CMM)

12303001

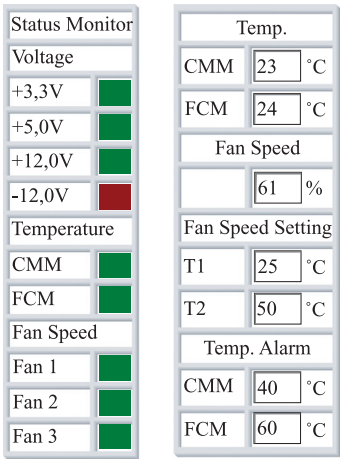

09802051

Status display via web browser

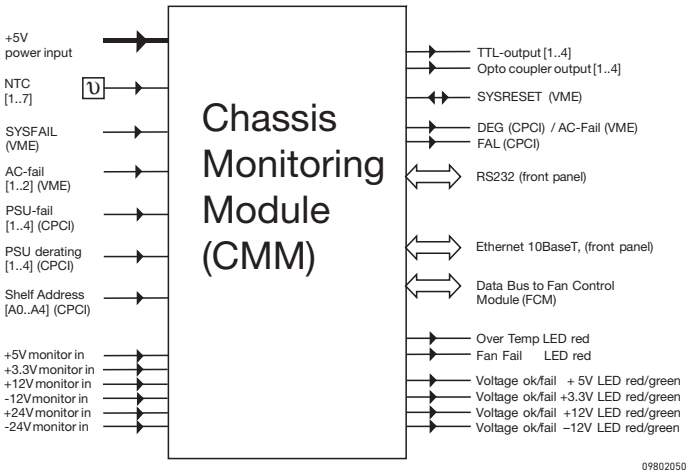

09802050

Block diagram inputs and outputs

- Monitoring of voltages, temperatures and digital inputs
- Communication and remote control via RS 232 or Ethernet interface (10BaseT)
- Inputs and outputs for VME specific and CPCI specific signals, further digital and LED outputs
- Data bus for communication with the Schroff Fan Control Module (FCM)
- Pluggable in 3 U euroboard format

Delivery comprises

Item	Qty	Description
1	1	Chassis monitoring module (CMM), height 3 U, depth 160 mm, width 4 HP, front panel fitted

Order Information

Description	Height U	Depth mm	Part no.
Chassis monitoring module (CMM)	3	160	23207-022

Note

- User manual: Please enter part number under **www.schroff.biz/oneclick/**

Module to mount drive unit, with front panel, U profile, shielded 1 × 3 1/2", 3 U vertical

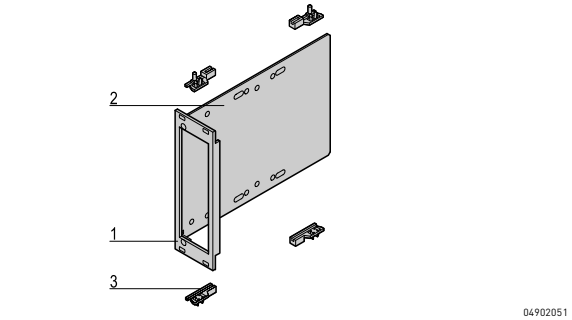

04902051

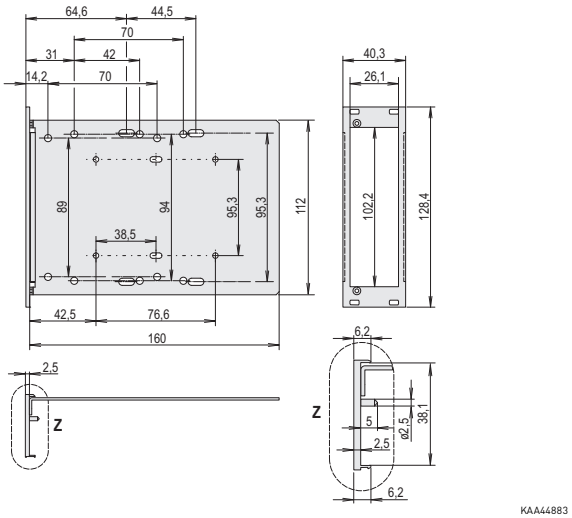

KAA44883

Delivery comprises (kit)

Item	Qty	Description
1	1	U profile front panel with drive unit cut-out, Al, 2.5 mm, front anodised, rear colourless chromated, 2 alignment pins, stainless steel, pressed-in
2	1	Side panel, plug-in version, Al, 1.5 mm, chromated
3	4	Guide rail, PBT UL 94 V-0, red
4	1	Assembly kit

Order Information

Front panel dimensions		Part no.
Height	Width	
U	HP	
3	8	**24579-042**

Note

- Suitable for europacPRO, ratiopacPRO, CompactPCI, VMEbus and VME64xbus only
- Covers for drive unit cut-outs see page 8.110

Module to mount drive unit, with front panel, U profile, shielded HD 1 × 3 1/2", 3 U vertical

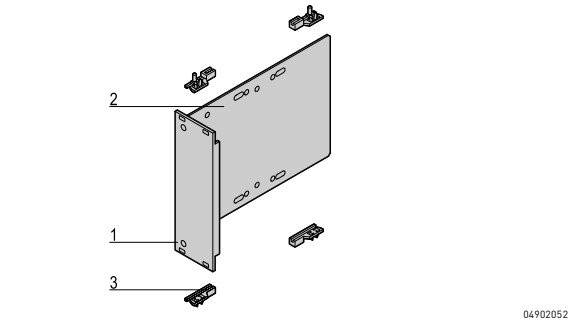

04902052

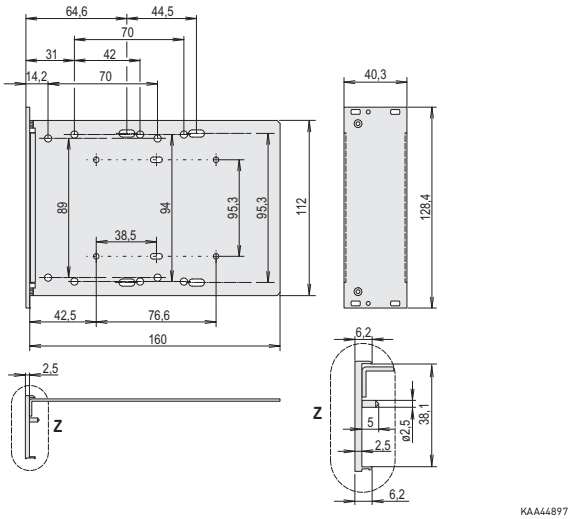

KAA44897

Delivery comprises (kit)

Item	Qty	Description
1	1	U profile front panel, Al, 2.5 mm, front anodised, rear iridescent green chromated; 2 alignment pins, stainless steel, pressed-in
2	1	Side panel, plug-in version, Al, 1.5 mm, chromated
3	4	Guide rail, PBT UL 94 V-0, red
4	1	Assembly kit

Order Information

Front panel dimensions		Part no.
Height H	Width B	
U	HP	
3	8	**24579-043**

Note

- Suitable for europacPRO, ratiopacPRO, CompactPCI, VMEbus and VME64xbus only
- Covers for drive unit cut-outs see page 8.110

Systems – Accessories

Module to mount drive unit, with front panel, U profile, shielded, 1 x 5 1/4", HD 1 x 2.5", 6 U vertical

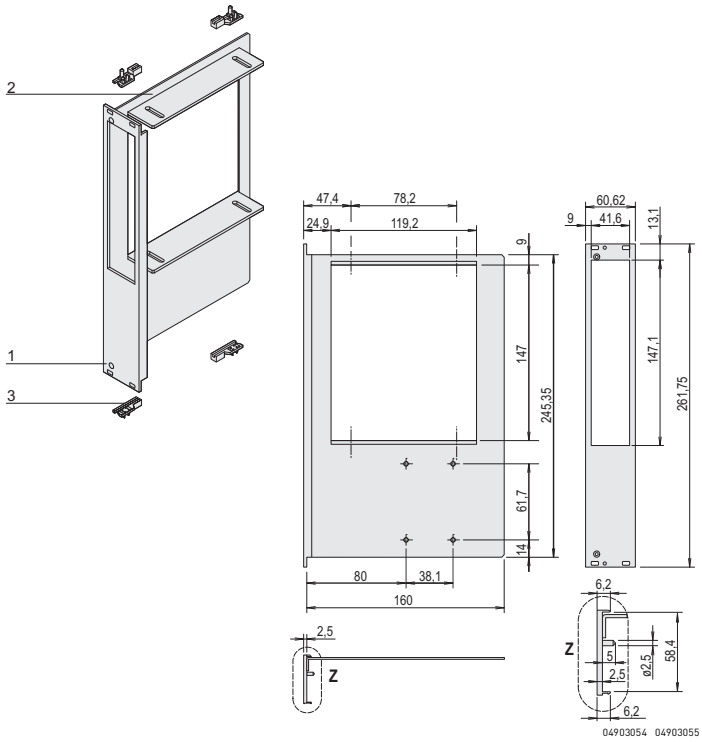

Delivery comprises (kit)

Item	Qty	Description
1	1	U profile front panel with drive unit cut-out, Al, 2.5 mm, front anodised, rear iridescent green chromated
2	1	Side panel, plug-in version, Al, 1.5 mm, passivated
3	4	Guide rail, PBT, UL 94 V-0, red
4	1	Assembly kit

Order Information

Front panel dimensions		Part no.
Height	Width	
U	HP	
6	12	**24579-074**

Note

- Suitable for europacPRO, ratiopacPRO, CompactPCI, VMEbus and VME64xbus only
- Covers for drive unit cut-outs see page 8.110

Module to mount drive unit, with front panel, U profile, shielded, for Slim Line CD/DVD, HD 1 x 2.5", 6 U vertical

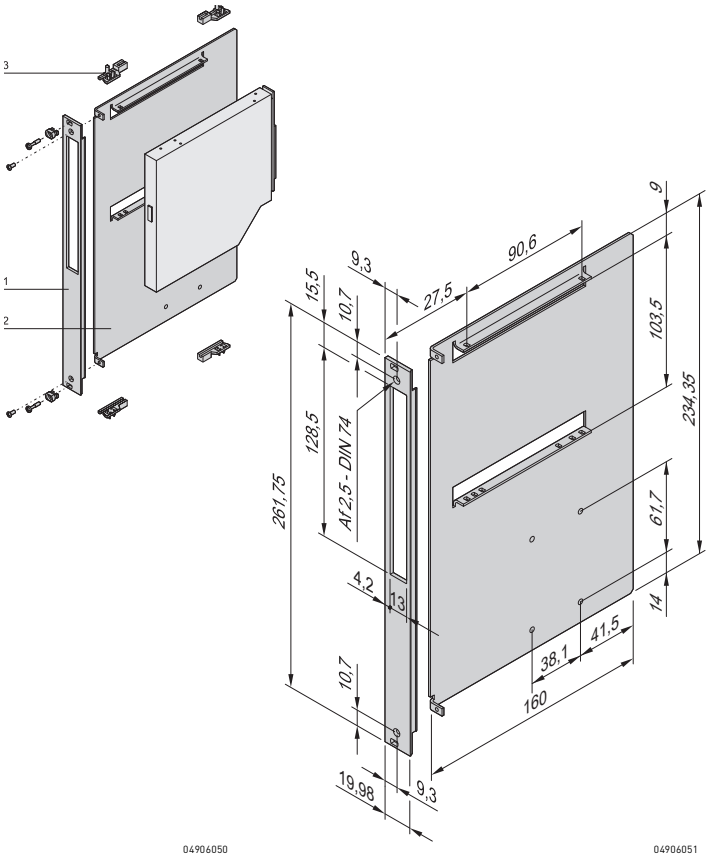

Delivery comprises

Item	Qty	Description
1	1	U profile front panel, 6 U, 4 HP, with drive unit cut-out, Al, 2.5 mm, front anodised, rear iridescent green chromated
2	1	Side panel, plug-in version, Al, 1.5 mm, passivated
3	4	Guide rail, PBT, UL 94 V-0, red
4	1	Assembly kit

Order Information

Front panel dimensions		Part no.
Height	Width	
U	HP	
6	4	**24579-230**

Note

- Suitable for europacPRO, ratiopacPRO, CompactPCI, VMEbus and VME64xbus only
- Covers for drive unit cut-outs see page 8.110

Module to mount drive unit HD 1 x 3 1/2", 3 U vertical

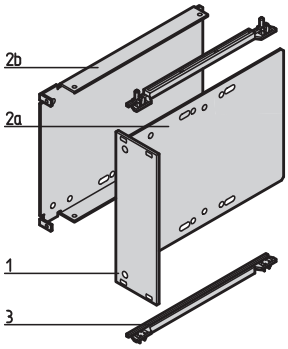

KAA44896

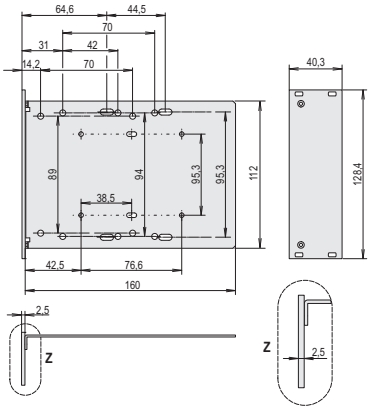

04909050

Plug-in version

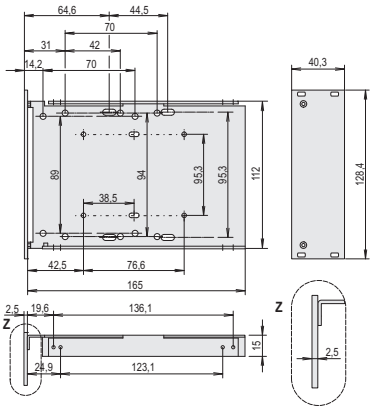

04909051

Screw-fixed version

Delivery comprises (kit)

Item	Qty	Description
1	1	Front panel, Al, 2.5 mm, front anodised, rear irisdescent green chromated
2a	2	Side panel, plug-in version, Al, 1.5 mm, passivated
2b	2	Side panel, screw-fixed version, Al, 2.0 mm, passivated
3	2	Guide rail, PPE, UL 94 V-0, black; only for plug-in version
4	1	Assembly kit

Order Information

Front panel dimensions		Plug-in version	Screw-fixed version
Height	Width		
U	HP	Part no.	Part no.
3	8	20810-611	20810-605

- Please order assembly parts for drive units and guide rails for europacPRO and ratiopacPRO separately, see chapter Subracks - europacPRO
- Covers for drive unit cut-outs see page 8.110

Covers for drive unit cut-outs

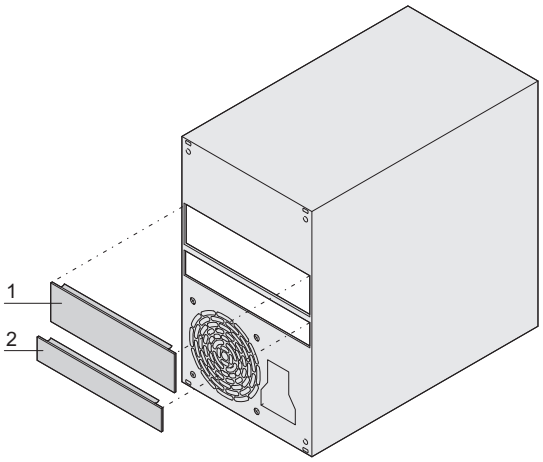

12106050

- Front panel is clipped into drive unit cut-out with clamping device

Delivery comprises (assembled)

Item	Qty	Description
1	1	Front panel, Al, 2 mm, anodised
2	1	Clamping device to clip-on, stainless steel

Order Information

Item	Description	Part no.
1	Cover for 5.25" (CD/DVD)	24496-120
2	Cover for Slim Line drive (CD/DVD)	24496-122

Note

- Covers for 3.5" drive units available on request

Systems – Accessories

Screws for drive units

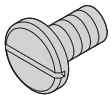

06706053

Order Information

Description	Qty/PU	Part no.
Slotted flathead screws, M 3 x 6	100	**21100-711**
Pozidrive flathead screws, M 4 x 6	100	**21100-574**
Slotted flathead screw, 6-32 UNC x 6	100	**21100-712**

Cable for drive unit

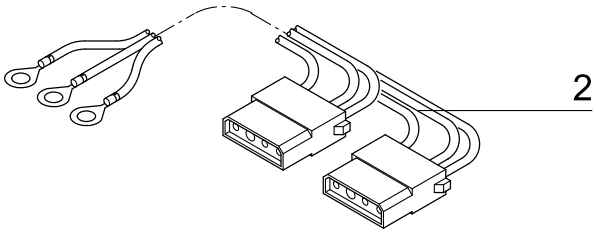

09802054

- The cable connects commercially available drive units with the power supply

Order Information

Item	Description	Qty/PU	Part no.
2	Drive unit cable for 2 x 5 1/4", ring tag Ø M4, length 560 mm, connector AMP/Tyco 1-171822-4	1	**20835-188**

AC input module with filter

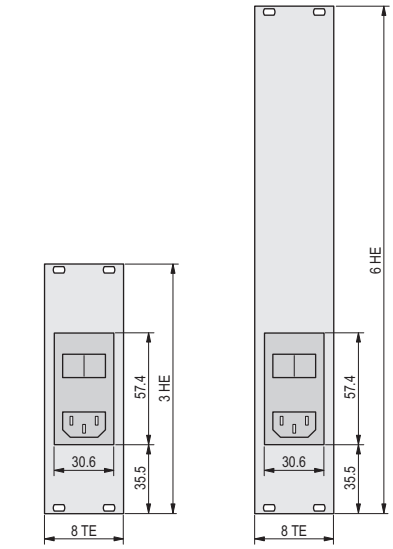

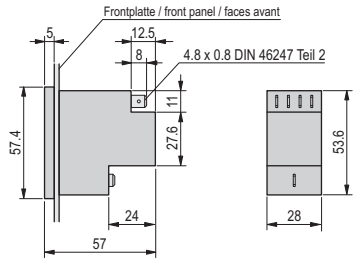

12303050

- Front panel (U front panel) for shielding with EMC textile gasket
- Voltage 110 V_{AC} ... 250 V_{AC}, 50 Hz ... 60 Hz
- Max. current 10 A at 40°C

Delivery comprises

Item	Qty	Description
1	1	U front panel, 2.5 mm, front anodised, rear colourless chromated

Order Information

Height H U	Width B HP	Part no.
3	8	**24579-058**
6	8	**24579-059**
Textile EMC seals 3 U, PU 10 pieces		**21101-853**
Textile EMC seals 3 U, PU 100 pieces		**21101-854**
Textile EMC seals 6 U, PU 10 pieces		**21101-855**
Textile EMC seals 6 U, PU 100 pieces		**21101-856**

Note

- EMC profile seals are required to shield the front panels

Systems – ServicePLUS

configuration

Simple. Fast. To the ideal product.

Components can be varied and combined freely

- Our configurators help you select what you need
- Online configuration:www.schroff.co.uk/configuration

assembly

Assembled by professionals. Double benefit!

Fitting of all mechanical, electrical and electronic components by our specialists

- From a quantity of 1, completely assembled and tested
- Ready for despatch within 10 working days

modification

Small changes. Large impact.

Custom drillings, cut-outs and special colours for off-the-shelf products

- Mechanical modifications, modifications of backplanes and PSUs, cabling
- Ready for despatch within 15 working days

solution

Simple. Fast. Out of one source.

Integration and custom developments

- Air conditioning, complete assembly, function test
- Customised complete solutions

express

When fast has to be faster.

Delivery time to customer's request

- System Express
- Further information: www.schroff.co.uk/express

support

Support. Solution. Availability.

Assistance if required

- Telephone support

academy

Knowledge. Sharing. Partnerships.

Knowledge transfer and partnership

- Seminars, white papers, CAD drawings, test reports, user reports
- Further information: www.schroff.co.uk/academy

lifecycle

We are with you. For the entire product life.

Flexible support throughout the product lifecycle

- Exchange service, maintenance, repairs, replacement parts

Systems – ServicePLUS

Application examples

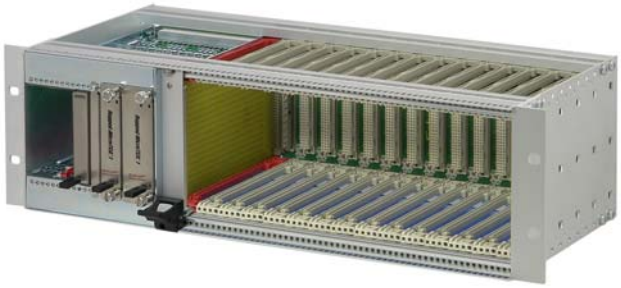

12908007

- Hybrid system, modification of a MicroTCA single-module board cage into a 3 U chassis to DIN EN 60297

12908005

- MicroTCA system, 1 U for 6 single mid-size AMC modules; power supply, increased air inlet and exhaust area with inwardly curved side panels

12909001

- MicroTCA chassis with hot-swap fan unit and power supply

12309002

- CompactPCI chassis with hot-swap fan unit and custom finishing

12309001

- CompactPCI chassis with 48 V_{DC} power supply

12709003

- 2 slot, 2 U AdvancedTCA chassis with custom colour

PENTAIR

Power supplies – Overview

Content

Cabinets 1

Wall mounted cases 2

Accessories for cabinets and wall mounted cases . 3

Climate control . 4

Electronics cases 5

Subracks/ 19" chassis 6

Front panels, plug-in units . . . 7

Systems 8

Power supply units 9

Backplanes . . . 10

Connectors, front panel component system 11

Appendix 12

19" AC/DC switch-mode PSUs

- Compact PSUs with high efficiency level

19" AC/DC linear regulators

- Very low interference, optimised for medical applications

19" DC/DC switch-mode PSUs

- Large DC input voltage range and high performance

36106011 (11302001 11399005 11303001 11300001 11301001)

Power supplies – Overview

PSUs for MicroTCA applications

- Plug-in PSUs in double full-size format with and without management

PSUs for VMEbus applications

- AC/DC and DC/DC switch-mode PSUs in 19" or open frame design

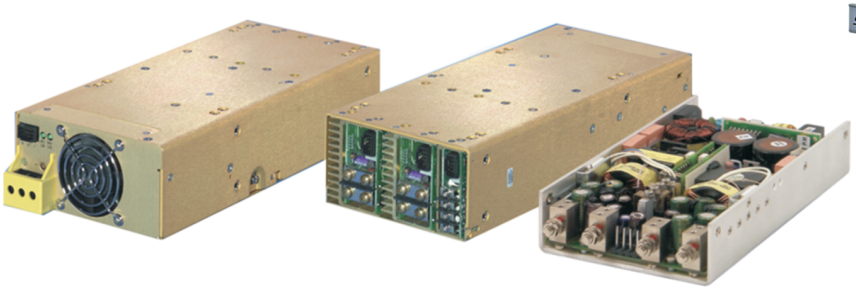

PSUs for CompactPCI and VME64x applications

- AC/DC and DC/DC switch-mode PSUs in 19" or open frame design

36106012 (11311001 11309004 11312001 11301002 11406001 11408002 11302005)

Overview 9.0

19" AC/DC switch-mode PSUs

AC/DC regulators

Single, 42 W 9.2
Single, 50 W 9.3
Single, 100 W ... 9.4
Single, adjustable, 100 W 9.5
Single, 180 W ... 9.6
Dual, 100 W 9.7
Triple, 100 W 9.8
Triple, 130 W 9.9

AC/DC linear regulators

Single, 8 - 60 W . 9.10
Dual, 10 - 58 W .. 9.11
Triple, 7 - 39 W .. 9.12

DC/DC switch-mode PSUs

Single, 100 W ... 9.13
Dual, 100 W 9.14
Triple, 100 W 9.15

Accessories

Z-rail, 4 HP 9.16
Connector H 15 F 9.16
Keying/coding .. 9.17
Wall/horizontal rail mounting ... 9.18

PSUs for MicroTCA

MTCA double, with management ... 9.19
MTCA double, without management ... 9.20

PSUs for VMEbus

19", AC/DC, triple, 150/224 W 9.21
Open frame, AC/DC, triple, 444 ... 800 W 9.22

PSUs for CompactPCI, CompactPCI Serial, and VME64x

CPCI Serial, 19", AC/DC, 3 U, 300 W 9.23
19" AC/DC, 3/6 U, 250/500 W 9.24
AC/DC open frame, triple, 300/600 W 9.26
19" DC/DC, 3/6 U, 250/500 W 9.28

ServicePLUS .. 9.30

Power supplies – 19" AC/DC switch-mode PSUs

slimpower 42 W, single

11302001

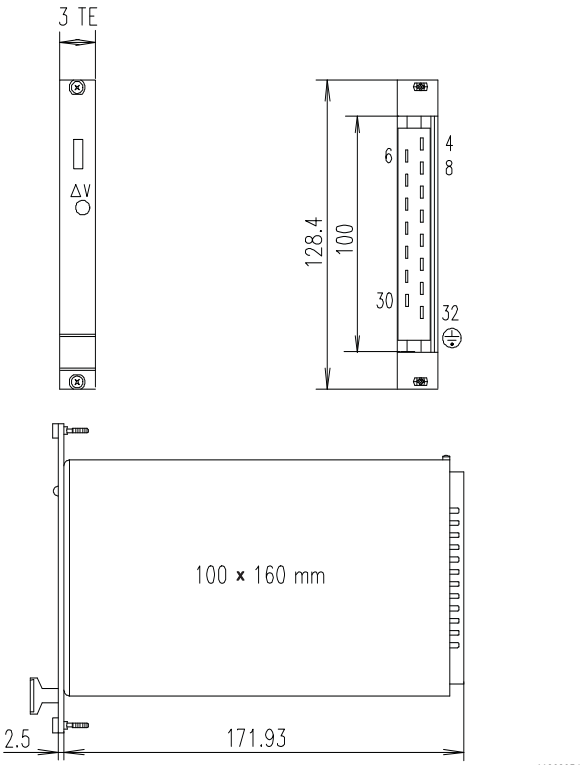

11302054

- Width only 3 HP
- Wide input voltage range
  85 ... 254 VAC and 120 ... 360 VDC
- Single output voltage with low interferences
  (low ripple < 10 mV_{PP})
- Integrated decoupling diode for redundancy operation
  (can be activated)
- Passive Current Share Bus
- Signalling: Output voltage OK

CE

Delivery comprises

Qty	Description
1	19"-compatible power supply unit height 3 U width 3 HP depth 171.93 mm (160 mm board depth) connector H 15 M

Order Information

Voltage V	Current A	Power W	Description	Part no.
5	6	30	SLE 105	**13100-136**
12	3.5	42	SLE 112	13100-137
15	2.8	42	SLE 115	**13100-138**
24	1.7	41	SLE 124	13100-139
Front panel 3 HP, Al, front anodised, rear iridescent green chromated, with vertical grooves for EMC gaskets, incl. assembly kit, 1 piece				**21006-959**
EMC gaskets (stainless steel) 3 U, 97 mm, stainless steel, two pieces necessary per front panel, PU 10 pieces				**21101-705**
Connector H 15 F Mating connector (female) for wiring inputs/outputs (6.3 mm FASTON), 1 piece				**69001-733**

Note

- **Please order front panel separately**
- Output data at T_A = 0 ... 50 °C
- Customised front panels available via
  www.frontpanelexpress.eu
- Further accessories see page 9.16

TE = HP

Connector pin-out

Pin	Connection
4	Output + V_1
6	Output + V_1
8	Sense line + V_1
10	Sense line 0 V_1
12	Output 0 V_1
14	Output 0 V_1
16	–
18	–
20	–
22	–
24	Output OK
26	–
28	L
30	N
32	PE ⏚

Power supplies – 19" AC/DC switch-mode PSUs

Maxpower 50 W, single

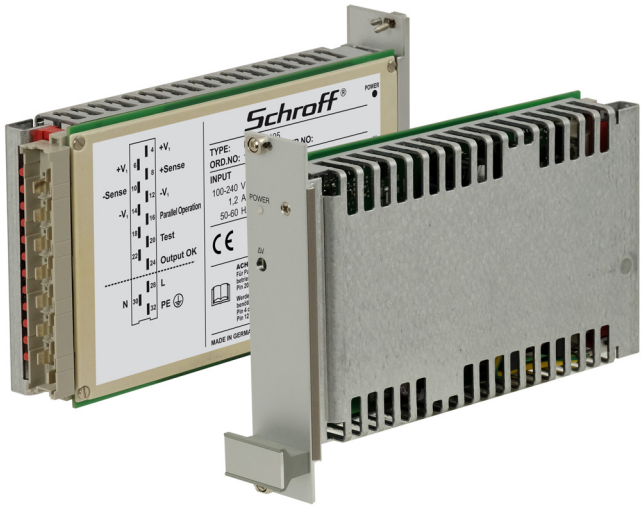

11317001

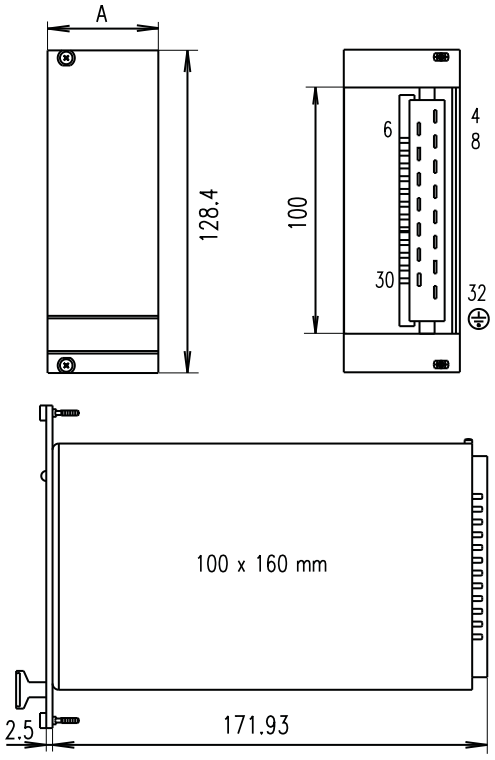

DIJM0084

- Wide input voltage range 90 to 264 V_{AC} and 130 to 340 V_{DC}
- 1 output voltage
- Signaling: Output voltage OK
- Includes installed front panel
- Efficiency up to 88%
- Standby (no load) power output < 1.5 W
- Redundancy operation
  - With hot swap function
  - With active OR decoupling
  - 24 V, 48 V version with decoupling diode - hot swap
  - No base load required
  - Automatic load distribution depending on power supply unit (PSU) temperature
  - No current share line between the power supplies necessary
  - Quasi-resonant topology reduces emissions that affect electromagnetic compatibility (EMC)

Delivery includes

Qty.	Description
1	19" compatible power supply with installed front plate height 3 U width A: 6 HP depth 171.93 mm (160 mm board depth) H15M connector coding strip (fitted) EMC seal (included)

Order Information

Voltage V	Current A	Power W	Description	Part no.
5	10	50 1)	MAX50-105	13100-170
12	4.2	51	MAX50-112	13100-171
15	3.4	51	MAX50-115	13100-172
24	2.1	51	MAX50-124	13100-173
48	1.1	53	MAX50-148	13100-174
Accessories				
Connector H 15 F FASTON connection, 1 piece				**69001-733**
Coding PU (1 keying/coding strip, 2 pieces keying/coding pins)				**60800-123**

Note

- Output data at TU = -25 ... 50 °C
- Customized front panels available at www.frontplattenexpress.eu

Connector pin-out

Pin	Connection
4	Output + V_1
6	Output + V_1
8	Sense line + V_1
10	Sense line 0V V_1
12	Output 0V V_1
14	Output 0V V_1
16	Parallel operation
18	-
20	Test
22	-
24	Output OK
26	-
28	L
30	N
32	PE ⏚

Power supplies – 19" AC/DC switch-mode PSUs

maxpower 100 W, single

11399005

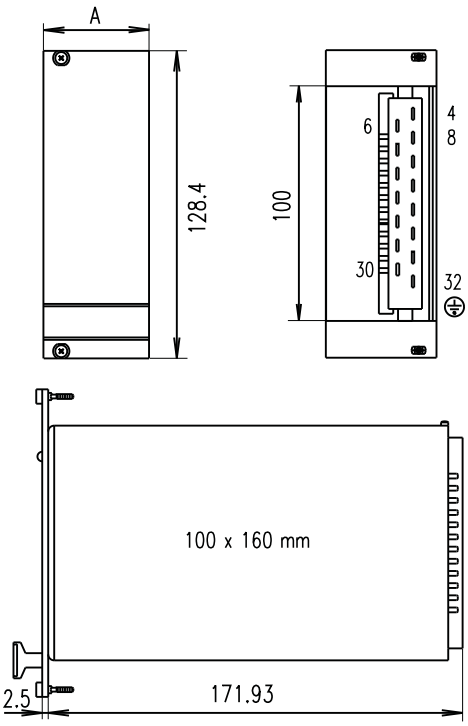

DIJM0084

- Wide input voltage range 90 ... 254 V_{AC} and 100 ... 360 V_{DC} with active power factor correction (PFC)
- High power density
- Single output voltage
- Integrated decoupling diode for redundancy operation
- Active current share bus (CSB)
- Signalling: Output voltage OK

Delivery comprises

Qty	Description
1	19" compatible power supply height 3 U width A: 6 HP depth 171.93 mm (160 mm board depth) connector H 15 M coding strip (fitted)

Order Information

Voltage V	Current A	Power W	Description	Part no.
5	16	80	MAX 105	**13100-102**
12	8.3	100	MAX 112	13100-103
15	6.6	99	MAX 115	13100-104
24	4.2	101	MAX 124	**13100-105**
Front panel 6 HP, Al, front anodised, rear iridescent green chromated, with vertical grooves for EMC gaskets, incl. assembly kit, 1 piece				**21006-943**
EMC gaskets (stainless steel) 3 U, 97 mm, stainless steel, two pieces necessary per front panel, PU 10 pieces				**21101-705**
Connector H 15 F Mating connector (female) for wiring inputs/outputs (6.3 mm FASTON), 1 piece				**69001-733**
Coding PU (1 keying/coding strip, 2 pieces keying/coding pins)				**60800-123**

Note

- **Please order front panel separately**
- Output data for mains voltage > 190 V_{AC}, T_A = 0 ... 50 °C
- Customised front panels available via **www.frontpanelexpress.eu**
- Further accessories see page 9.16

Connector pin-out

Pin	Connection
4	Output + V_1
6	Output + V_1
8	Sense line + V_1
10	Sense line 0 V_1
12	Output 0 V_1
14	Output 0 V_1
16	–
18	–
20	–
22	CSB
24	Output OK
26	–
28	L
30	N
32	PE ⏚

Power supplies – 19" AC/DC switch-mode PSUs

maxpower 100 W, adjustable, single

11303001

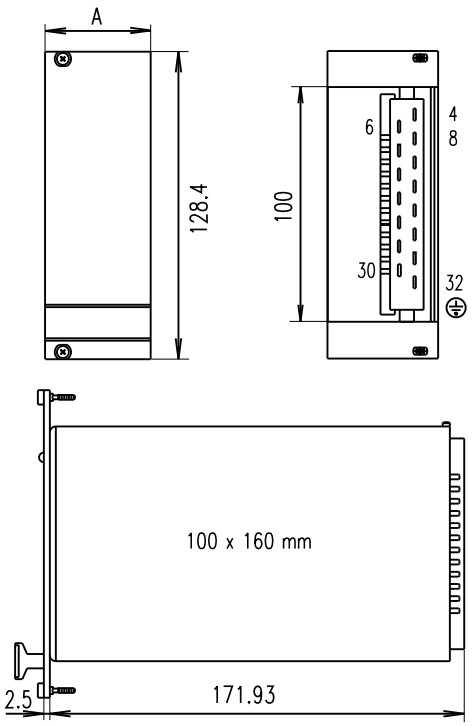

DIJM0084

- Wide adjustment range of output voltage
- Wide input voltage range 90 ... 264 V_{AC} and 100 ... 360 V_{DC} with active Power Factor Correction (PFC)
- Single output voltage
- Integrated decoupling diode for redundancy operation
- Active Current Share Bus (CSB)
- Signalling: Output voltage OK

CE

Delivery comprises

Qty	Description
1	19" compatible power supply height 3 U width A: 6 HP depth 171.93 mm (160 mm board depth), output voltage factory preset to 12 V / 24 V Connector H 15 M Coding strip (fitted)

Order Information

Voltage V	Current A	Power W	Description	Part no.
4.5–17	5.9	100	MAX LR	**13100-133**
16–30	3.4	102	MAX UR	13100-134
Front panel 6 HP, Al, front anodised, rear iridescent green chromated, with vertical grooves for EMC gaskets, incl. assembly kit, 1 piece				**21006-954**
EMC gaskets (stainless steel) 3 U, 97 mm, stainless steel, two pieces necessary per front panel, PU 10 pieces				**21101-705**
Connector H 15 F Mating connector (female) for wiring inputs/outputs (6.3 mm FASTON), 1 piece				**69001-733**
Coding PU (1 keying/coding strip, 2 pieces keying/coding pins)				**60800-123**

Note

- **Please order front panel separately**
- Output data for mains voltage > 190 V_{AC}, T_A = 0 ... 50 °C
- Customised front panel available via **www.frontpanelexpress.eu**
- Further accessories see page 9.16

Connector pin-out

Pin	Connection
4	Output + V_1
6	Output + V_1
8	Sense line + V_1
10	Sense line 0 V_1
12	Output 0 V_1
14	Output 0 V_1
16	–
18	–
20	–
22	CSB
24	Output OK
26	–
28	L
30	N
32	PE ⏚

Power supplies – 19" AC/DC switch-mode PSUs

maxpower 180 W, single

11308005

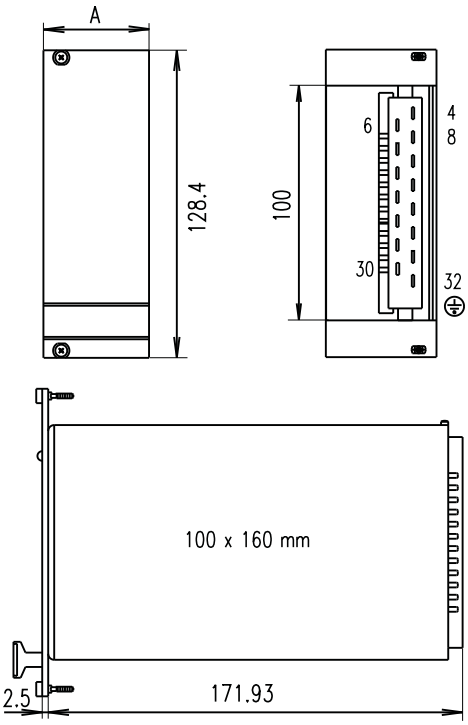

DIJM0084

- Wide input voltage range 90 ... 254 V_{AC} and 100 ... 360 V_{DC} with active Power Factor Correction (PFC)
- Single output voltage
- Integrated active decoupling for redundancy operation
- Active Current Share Bus (CSB)
- Signalling: Output voltage OK
- Efficiency up to 87 %

CE

Delivery comprises

Qty	Description
1	19" compatible power supply height 3 U width A: 8 HP depth 171.93 mm (160 mm board depth) connector H 15 M coding strip (fitted)

Order Information

Voltage V	Current A	Power W	Description	Part no.
5	30	150	MAX 180-105	13100-150
12	13	156	MAX 180-112	13100-151
15	11	165	MAX 180-115	13100-152
24	7	168	MAX 180-124	**13100-153**
Front panel 8 HP, Al extrusion, front anodised, rear iridescent green chromated, shielded with fixed textile gasket, incl. assembly kit, 1 piece				**31006-677**
Connector H 15 F Mating connector (female) for wiring inputs/outputs (6.3 mm FASTON), 1 piece				**69001-733**
Coding PU (1 keying/coding strip, 2 pieces keying/coding pins)				**60800-123**

Note

- **Please order front panel separately**
- Output data for mains voltage > 190 V_{AC}, T_A = 0 ... 50 °C
- Customised front panels available via **www.frontpanelexpress.eu**
- Further accessories see page 9.16

Connector pin-out

Pin	Connection
4	Output + V_1
6	Output + V_1
8	Sense + V_1
10	Sense 0V V_1
12	Output 0V V_1
14	Output 0V V_1
16	Output + V_1
18	Output 0V V_1
20	Test
22	CSB
24	DC output OK
26	–
28	L
30	N
32	PE ⏚

Power supplies – 19" AC/DC switch-mode PSUs

maxpower 100 W, dual

11300010

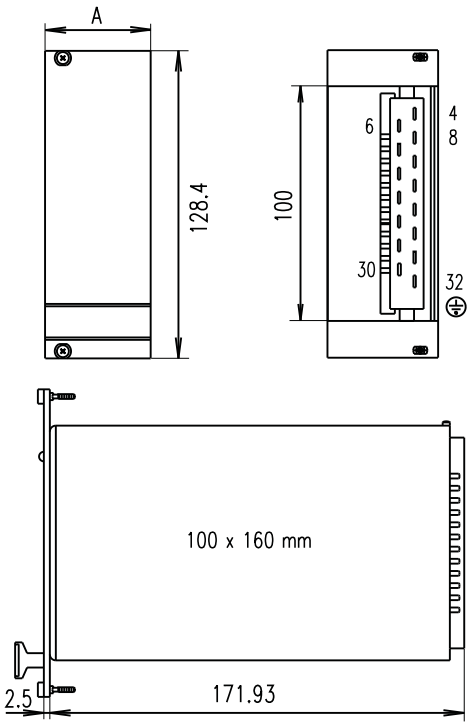

DIJM0084

- Wide input voltage range 90 ... 254 V_{AC} and 100 ... 360 V_{DC} with active power-factor correction (PFC)
- High power density
- 2 output voltages
- Efficiency up to 80%

Delivery comprises

Qty	Description
1	19"-compatible power-supply unit height: 3 U width A: 8 HP depth 171.93 mm (160 mm board depth) connector H 15 M coding strip (fitted)

Order Information

Voltage V	Current A	Power W	Description	Part no.
V1: 5 V_2: 12	I_1: 9 I_2: 4	93	MAX 2512	13100-112
V1: 5 V_2: 24	I_1: 9 I_2: 2	93	MAX 2524	**13100-114**
V1: 12 V_2: -12	I_1: 4.2 I_2: 4.2	101	MAX 212	13100-115
V1: 15 V_2: -15	I_1: 3.4 I_2: 3.4	102	MAX 215	**13100-116**
Front panel 8 HP, Al, front anodised, rear iridescent green chromated, with vertical grooves for EMC gaskets, incl. assembly kit, 1 piece				**21006-945**
EMC gaskets (stainless steel) 3 U, 97 mm, stainless steel, two pieces necessary per front panel, PU 10 pieces				**21101-705**
Connector H 15 F Mating connector (female) for wiring inputs/outputs (6.3 mm FASTON), 1 piece				**69001-733**
Coding PU (1 keying/coding strip, 2 pieces keying/coding pins)				**60800-123**

Note

- **Please order front panel separately**
- Output data for mains voltage > 190 V_{AC}, T_A = 0 ... 50 °C
- Customised front panels available via www.frontpanelexpress.eu
- Further accessories see page 9.16

Connector pin-out

Pin	Connection
4	–
6	–
8	–
10	–
12	–
14	–
16	Output + V_1
18	Output 0 V_1
20	Output + V_2
22	Output 0 V_2
24	–
26	–
28	L
30	N
32	PE ⏚

Power supplies – 19" AC/DC switch-mode PSUs

maxpower 100 W, triple

11300011

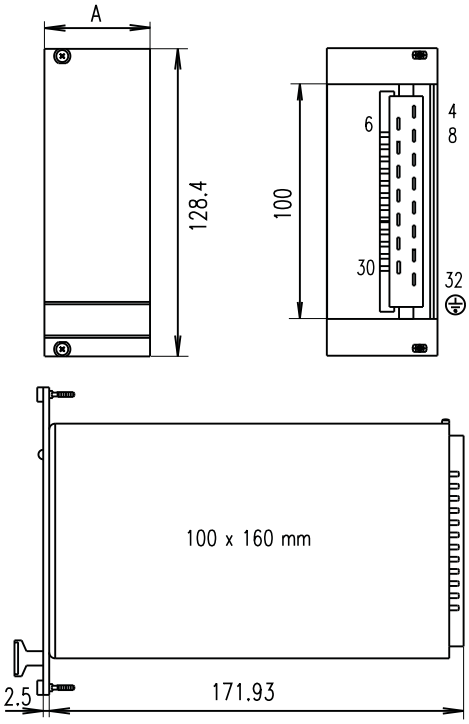

DIJM0084

- Wide input voltage range 90 ... 254 V_{AC} and 100 ... 360 V_{DC} with active power-factor correction (PFC)
- High power density
- 3 output voltages
- Signalling: Output voltage OK

Delivery comprises

Qty	Description
1	19" compatible power supply height 3 U width A: 8 HP depth 171.93 mm (160 mm board depth) connector H 15 M coding strip (fitted)

Order Information

Voltage V	Current A	Power W	Description	Part no.
V1: 5 V_2: 12 V_3: -12	I_1: 8 I_2: 2.5 I_3: 2.5	100	MAX 312	13100-122
V1: 5 V_2: 15 V_3: -15	I_1: 8 I_2: 2 I_3: 2	100	MAX 315	13100-123
Front panel 8 HP, Al, front anodised, rear iridescent green chromated, with vertical grooves for EMC gaskets, incl. assembly kit, 1 piece				**21006-945**
EMC gaskets (stainless steel) 3 U, 97 mm, stainless steel, two pieces necessary per front panel, PU 10 pieces				**21101-705**
Connector H 15 F Mating connector (female) for wiring inputs/outputs (6.3 mm FASTON), 1 piece				**69001-733**
Coding PU (1 keying/coding strip, 2 pieces keying/coding pins)				**60800-123**

Note

- **Please order front panel separately**
- Output data for mains voltage > 190 V_{AC}, T_A = 0 ... 50 °C
- Customised front panels available via **www.frontpanelexpress.eu**
- Further accessories see page 9.16

Connector pin-out

Pin	Connection
4	Output + V_1
6	Output + V_1
8	Sense line + V_1
10	Sense line 0V V_1
12	Output 0V V1,2
14	Output 0V V1,2
16	Output + V_2
18	Output 0V V1,2
20	Output 0V V_3
22	Output – V_3
24	Output OK
26	–
28	L
30	N
32	PE ⏚

Power supplies – 19" AC/DC switch-mode PSUs

maxpower 130 W, triple

11399009

- Wide input voltage range 90 ... 254 V_{AC} and 100 ... 360 V_{DC} with active Power Factor Correction (PFC)
- 3 output voltages
- Signalling: Output voltage OK

Delivery comprises

Qty	Description
1	19" compatible power supply height 3 U width A: 12 HP depth 171.93 mm (160 mm board depth) connector H 15 M coding strip (fitted)

Order Information

Voltage V	Current A	Power W	Description	Part no.
V1: 5 V_2: 12 V_3: -12	I_1: 16 I_2: 2.8 I_3: 1.4	132	SEG 312	13100-078
V1: 5 V_2: 15 V_3: -15	I_1: 16 I_2: 2.2 I_3: 1.1	132	SEG 315	13100-079
Front panel 12 HP, Al, front anodised, rear iridescent green chromated, with vertical grooves for EMC gaskets, incl. assembly kit, 1 piece				**21006-946**
EMC gaskets (stainless steel) 3 U, 97 mm, stainless steel, two pieces necessary per front panel, PU 10 pieces				**21101-705**
Connector H 15 F Mating connector (female) for wiring inputs/outputs (6.3 mm FASTON), 1 piece				**69001-733**
Coding PU (1 keying/coding strip, 2 pieces keying/coding pins)				**60800-123**

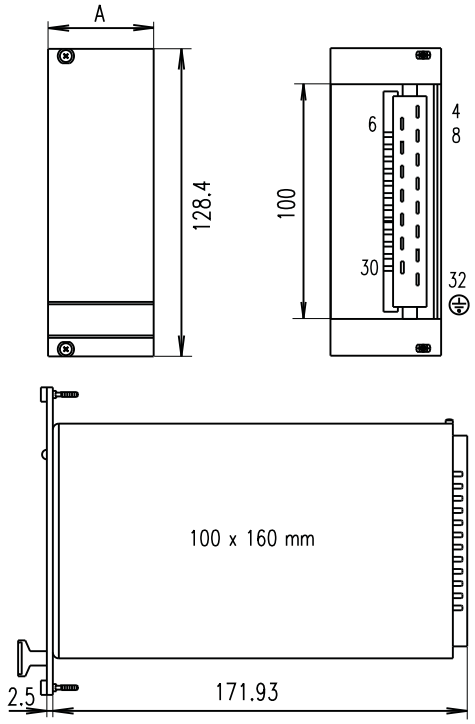

DIJM0084

Note

- **Please order front panel separately**
- Output data for mains voltage > 190 V_{AC}, T_A = 0 ... 50 °C
- Customised front panel available via **www.frontpanelexpress.eu**
- Further accessories see page 9.16

Connector pin-out

Pin	Connection
4	Output + V_1
6	Output + V_1
8	Sense + V_1
10	Sense 0V V_1
12	Output 0V V1,2,3
14	Output 0V V1,2,3
16	Output + V_2
18	Output 0V V1,2,3
20	Output 0V V1,2,3
22	Output – V_3
24	Output OK
26	–
28	L
30	N
32	PE ⏚

Power supplies – 19" AC/DC linear regulators

Linear regulators, single

11397001

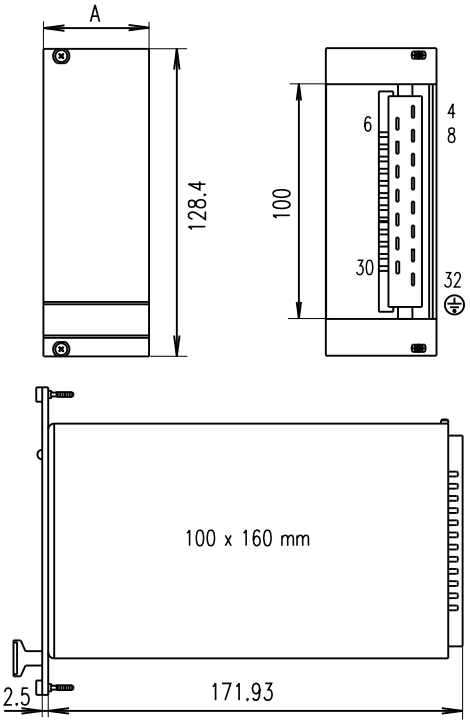

DIJM0084

- Mains/line voltage 230 V_{AC} (can be switched to 115 V_{AC} with mains/line voltage conversion kit)
- High control accuracy, low residual ripple and low interference, suitable for medical applications (8 mm safety clearances)
- PSM, PSG
  - Output voltage can be remote controlled externally (1 ... 10 V)
  - Switching of control curve for sensitive loads (U/I - Fold Back)
  - Current measurement via shunt

CE **EN 60950 approved**

Delivery comprises

Qty	Description
1	19" compatible power supply height 3 U width A: 6, 10, 14 HP depth 171.93 mm (160 mm deep boards) connector H 15 M (fitted) keying/coding peg (fitted)

Order Information

Voltage V	Current A	Power W	Width HP	Description	Part no.
5	1.5	8	6	PSK 105	**13105-001**
5	4	20	10	PSM 105	13105-006
5	6	30	14	PSG 105	**13105-011**
12	1.1	13	6	PSK 112	13105-002
12	2.8	31	10	PSM 112	**13105-007**
12	4.2	50	14	PSG 112	**13105-012**
15	1	15	6	PSK 115	**13105-003**
15	2.2	33	10	PSM 115	**13105-008**
15	3.5	53	14	PSG 115	**13105-013**
24	0.6	16	6	PSK 124	**13105-004**
24	1.5	36	10	PSM 124	**13105-009**
24	2.5	60	14	PSG 124	**13105-014**
Front panel for PSK 6 HP, 1 piece					**21005-475**
Front panel for PSM 10 HP, 1 piece					**21005-473**
Front panel for PSG 14 HP, 1 piece					**21005-474**
EMC gaskets (stainless steel) 3 U, 97 mm, stainless steel, two pieces necessary per front panel, PU 10 pieces					**21101-705**
Connector H 15 F Mating connector (female) for wiring inputs/outputs (6.3 mm FASTON), 1 piece					**69001-733**
Coding PU (1 keying/coding strip, 2 pieces keying/coding pins)					**60800-123**
Mains voltage conversion kit 230 V to 115 V, 1 piece					**43105-999**

Connector pin-out

Pin	PSK single	PSM, PSG single
4	Sense line + V_1	Sense line + V_1
6	Output + V	Output + V
8	Output + 0 V_1	Output +0 V_1
10	Sense line 0 V_1	Sense line 0 V_1
12	–	Optional: redundancy diode
14	–	External on/off
16	–	GND
18		V remote input + Vc
20	–	V-shunt + Vs
22	–	V-shunt – Vs
24	–	–
26	–	–
28	L	L
30	N	N
32	PE ⏚	PE ⏚

Note

- **Please order front panel separately** (Al, front anodised, rear iridescent green chromated, with vertical grooves for EMC gaskets, incl. assembly kit)
- PSK without case
- Output data at T_A = 0 ... 50 °C
- Further accessories see page 9.16

Power supplies – 19" AC/DC linear regulators

Linear regulators, dual

11300001

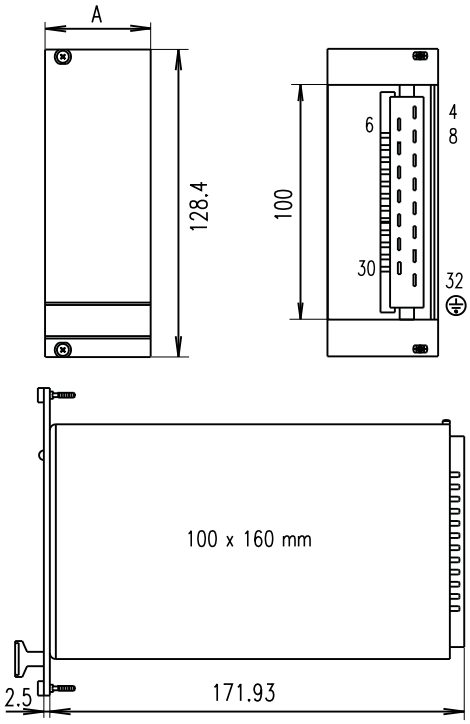

DIJM0084

- Mains/line voltage 230 V_{AC} (can be switched to 115 V_{AC} with mains/line voltage conversion kit)
- 2 output voltages, galvanically separated
- High control accuracy, low residual ripple and very low interference
- Suited for medical applications (8 mm safety clearances)

CE EN 60950 approved

Delivery comprises

Qty	Description
1	19" compatible power supply Height 3 U Width A: 6, 10, 14 HP Depth 171.93 mm (160 mm board depth) Connector H 15M Coding strip (fitted)

Order Information

Voltage V	Current A	Power W	Width HP	Description	Part no.
V1: 5 V_2: 5	I_1: 1.4 I_2: 1.4	14	10	PSM 205	**13105-021**
V1: 12 V_2: 12	I_1: 0.4 I_2: 0.4	10	6	PSK 212	13105-017
V1: 12 V_2: 12	I_1: 1 I_2: 1	24	10	PSM 212	13105-022
V1: 12 V_2: 12	I_1: 1.5 I_2: 1.5	36	14	PSG 212	**13105-027**
V1: 15 V_2: 15	I_1: 0.4 I_2: 0.4	12	6	PSK 215	**13105-018**
V1: 15 V_2: 15	I_1: 1 I_2: 1	30	10	PSM 215	13105-023
V1: 15 V_2: 15	I_1: 1.5 I_2: 1.5	45	14	PSG 215	**13105-028**
V1: 24 V_2: 24	I_1: 1.2 I_2: 1.2	58	14	PSG 224	**13105-029**
Front panel for PSK 6 HP, 1 piece					**21005-476**
Front panel for PSM 10 HP, 1 piece					**21005-477**
Front panel for PSG 14 HP, 1 piece					**21005-478**
EMC gaskets (stainless steel) 3 U, 97 mm, stainless steel, two pieces necessary per front panel, PU 10 pieces					**21101-705**
Connector H 15 F Mating connector (female) for wiring inputs/outputs (6.3 mm FASTON), 1 piece					**69001-733**
Coding PU (1 keying/coding strip, 2 pieces keying/coding pins)					**60800-123**
Mains voltage conversion kit 230 V to 115 V, 1 piece					**43105-999**

Connector pin-out

Pin	Connection
4	Sense line + V_1
6	Output + V_1
8	Output 0 V_1
10	Sense line 0 V_1
12	Sense line + V_2
14	Output + V_2
16	Output 0 V_2
18	Sense line 0 V_2
20	–
22	–
24	–
26	–
28	L
30	N
32	PE ⏚

Note

- **Please order front panel separately** (Al, front anodised, rear iridescent green chromated, with vertical grooves for EMC gaskets, incl. assembly kit)
- PSK without case
- Output data at T_A = 0 ... 50 °C
- Further accessories see page 9.16

Power supplies – 19" AC/DC linear regulators

Linear regulators, triple

11300002

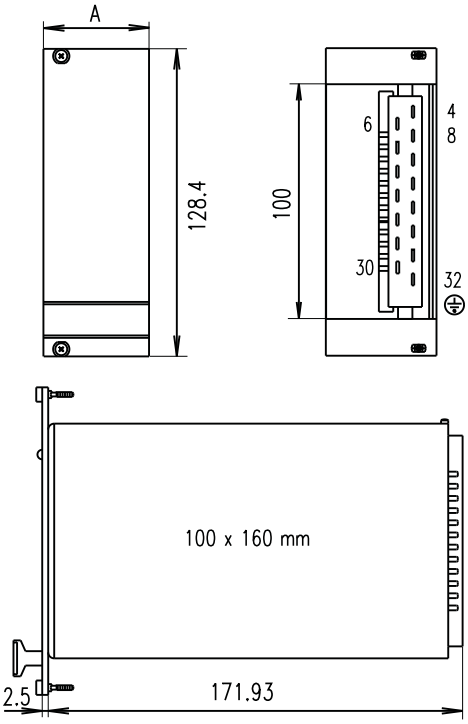

DIJM0084

- Mains/line voltage 230 V_{AC} (can be switched to 115 V_{AC} with mains/line voltage conversion kit)
- 3 output voltages, galvanically separated
- High control accuracy, low residual ripple and very low interference
- Suited for medical applications (8 mm safety clearances)

CE EN 60950 approved

Delivery comprises

Qty	Description
1	19" compatible power supply height 3 U width A: 6, 10, 14 HP depth 171.93 mm (160 mm board depth) connector H 15 M coding strip (fitted)

Order Information

Voltage V	Current A	Power W	Width HP	Description	Part no.
V1: 5 V_2: 12 V_3: 12	I_1: 0.5 I_2: 0.2 I_3: 0.2	8	6	PSK 312	13105-051
V1: 5 V_2: 12 V_3: 12	I_1: 1.5 I_2: 0.5 I_3: 0.5	20	10	PSM 312	13105-052
V1: 5 V_2: 12 V_3: 12	I_1: 3 I_2: 1 I_3: 1	39	14	PSG 312	**13105-053**
Front panel for PSK 6 HP, 1 piece					**21005-470**
Front panel for PSM 10 HP, 1 piece					**21005-451**
Front panel for PSG 14 HP, 1 piece					**21005-439**
EMC gaskets (stainless steel) 3 U, 97 mm, stainless steel, two pieces necessary per front panel, PU 10 pieces					**21101-705**
Connector H 15 F Mating connector (female) for wiring inputs/outputs (6.3 mm FASTON), 1 piece					**69001-733**
Coding PU (1 keying/coding strip, 2 pieces keying/coding pins)					**60800-123**
Mains voltage conversion kit 230 V to 115 V, 1 piece					**43105-999**

Note

- **Please order front panel separately** (Al, front anodised, rear iridescent green chromated, with vertical grooves for EMC gaskets, incl. assembly kit)
- PSK without case
- Output data at T_A = 0 ... 50 °C
- Further accessories see page 9.16

Connector pin-out

Pin	Connection
4	Sense line + V_1(PSM, PSG)
6	Output + V_1
8	Output 0 V_1
10	Sense line 0 V_1(PSM, PSG)
12	Output + V_2
14	Output 0 V_2
16	Output + V_3
18	Output 0 V_3
20	Data save
22	Power failure
24	0 V for pin 20, 22
26	–
28	L
30	N
32	PE ⏚

Power supplies – 19" DC/DC converters

coolpower 100 W, single

11301001

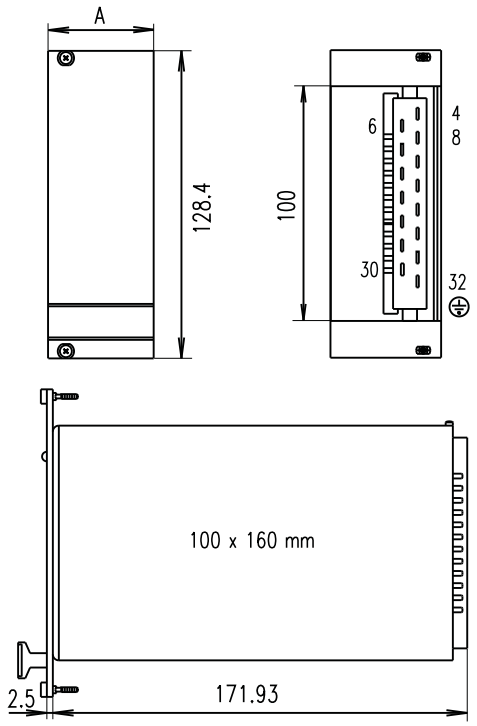

DIJM0084

- Wide input voltage range from 20 to 72 V_{DC}
- High power density
- Single output voltage, redundancy diode fitted
- External ON/OFF
- Galvanic separation between primary and secondary circuits
- Passive current-share operation

CE

Delivery comprises

Qty	Description
1	19" compatible power supply height 3 U width A: 6 HP depth 171.93 mm (160 mm board depth) connector H 15 M coding strip (fitted)

Order Information

Voltage V	Current A	Power W	Description	Part no.
5 1)	20	100	CPDC 105	**13103-002**
12 1)	8.5	102	CPDC 112	13103-003
15 1)	6.7	100	CPDC 115	13103-004
24 2)	4.5	108	CPDC 212	13103-007
1) Front panel 6 HP, Al, front anodised, rear iridescent green chromated, with vertical grooves for EMC gaskets, incl. assembly kit, 1 piece				**21006-955**
2) Front panel 6 HP, Al, front anodised, rear iridescent green chromated, with vertical grooves for EMC gaskets, incl. assembly kit, 1 piece				**21006-956**
EMC gaskets (stainless steel) 3 U, 97 mm, stainless steel, two pieces necessary per front panel, PU 10 pieces				**21101-705**
Connector H 15 F Mating connector (female) for wiring inputs/outputs (6.3 mm FASTON), 1 piece				**69001-733**
Coding PU (1 keying/coding strip, 2 pieces keying/coding pins)				**60800-123**

Note

- **Please order front panel separately**
- Power supply with CPDC 212, dual output voltages 24, 30 V (2 x 12 V, 2 x 15 V)
- Front panel for 13103-007: 21006-956
- For higher input voltages (100 ... 360 V_{DC}) see maxpower single, page 9.4
- Further accessories see page 9.16

Connector pin-out

Pin	5, 12, 15 V Connection
4	Output + V_1
6	Output + V_1
8	Sense line + V_0
10	Sense line 0V V_1
12	Output 0V V_1
14	Output 0V V_1
16	
18	
20	
22	Internally engaged
24	Output OK
26	Ext. ON/OFF*
28	$+V_E$
30	0V V_E
32	PE ⏚

Pin	24 V Connection
4 6 8	Output + 24 ... 30 V via diode
10	Output 0 V
12	Output 0 V
14	Output 0 V
16	Internally engaged
18	Internally engaged
20	Internally engaged
22	Internally engaged
24	
26	
28	$+V_E$
30	0V V_E
32	PE ⏚

Power supplies – 19" DC/DC converters

coolpower 100 W, dual

11302003

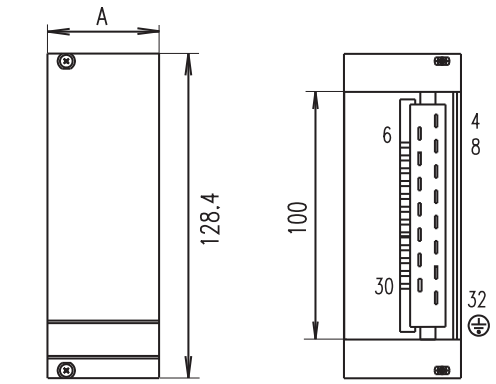

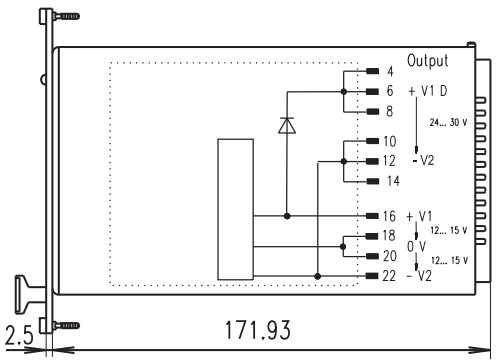

11302053

- Wide input voltage range from 20 to 72 V_{DC}
- High power density
- 2 output voltages (or single output voltage 24 – 30 V via internal redundancy diode V_1D)
- Galvanic separation between primary and secondary circuit

CE

Delivery comprises

Qty	Description
1	19" compatible power supply height 3 U width A: 6 HP depth 171.93 mm (160 mm board depth) connector H 15 M coding strip (fitted)

Order Information

Voltage min. ... max. V	Current A	Power W	Description	Part no.
V_1: 12 ... 15 V_2: -12 ...-15	I_1: 4.5 I_2: 4.5	108	CPDC 212	13103-007
Front panel 6 HP, Al, front anodised, rear iridescent green chromated, with vertical grooves for EMC gaskets, incl. assembly kit, 1 piece				**21006-956**
EMC gaskets (stainless steel) 3 U, 97 mm, stainless steel, two pieces necessary per front panel, PU 10 pieces				**21101-705**
Connector H 15 F Mating connector (female) for wiring inputs/outputs (6.3 mm FASTON), 1 piece				**69001-733**
Coding PU (1 keying/coding strip, 2 pieces keying/coding pins)				**60800-123**

Note

- **Please order front panel separately**
- 1 output voltage via output pins V_1D 24 V ... 30 V, I_1D 4.5 A, 108 W
- Output data at T_A = 50 °C
- Adjustment range 12 V ... 15 V
- For higher input voltages (100 ... 360 V_{DC}), see maxpower single, page 9.7
- Further accessories see page 9.16

Connector pin-out

Pin	Connection
4	Output + V_1D
6	Output + V_1D
8	Output + V_1D
10	Output – V_2
12	Output – V_2
14	Output – V_2
16	Output + V_1
18	Output V_1/V_2 0 V
20	Output V_1/V_2 0 V
22	Output – V_2
24	–
26	–
28	Input +Vi
30	Input 0 V
32	PE ⏚

Power supplies – 19" DC/DC converters

coolpower 100 W, triple

11302004

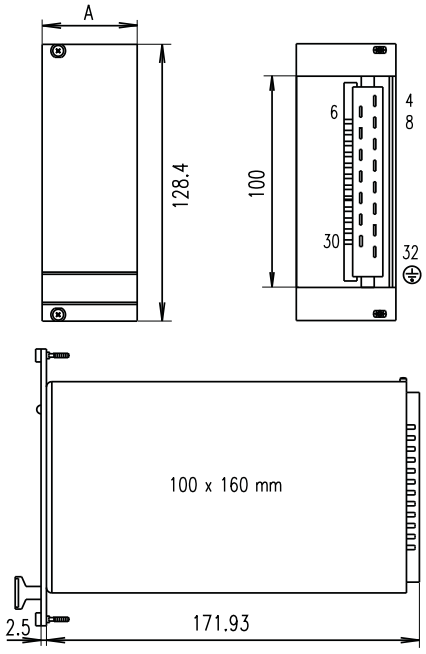

DIJM0084

- Wide input voltage range from 20 to 72 V_{DC}
- High power density
- 3 output voltages, galvanically separated
- Galvanic separation between primary and secondary circuit
- External ON/OFF

CE

Delivery comprises

Qty	Description
1	19" compatible power supply height 3 U width A: 6 HP depth 171.93 mm (160 mm deep boards) connector H15M (fitted) keying/coding peg (fitted)

Order Information

Voltage min. ... max. V	Current A	Power W	Description	Part no.
V_1: 5 V_2: 12 ...15 V_3: 12 ...15	I_1: 10 I_2: 2 I_3: 2	98	CPDC 312	**13103-016**
Front panel 6 HP, Al, front anodised, rear colourless chromated, with vertical grooves for EMC gaskets, incl. assembly kit, 1 piece				**21006-957**
EMC gaskets (stainless steel) 3 U, 97 mm, stainless steel, two pieces necessary per front panel, PU 10 pieces				**21101-705**
Connector H 15 F Mating connector (female) for wiring inputs/outputs (6.3 mm FASTON), 1 piece				**69001-733**
Coding PU (1 keying/coding strip, 2 pieces keying/coding pins)				**60800-123**

Note

- **Please order front panel separately**
- Output data at T_A = 50 °C
- Adjustment range V_2, V_3 12 ... 15 V
- Input voltage 100 ... 360 V_{DC}, see maxpower triple, page 9.8
- Further accessories see page 9.16

Connector pin-out

Pin	Connection
4	Output + V
6	Output + V_1
8	Sense line + V_2
10	Sense line V_1 0 V
12	Output V_1 0 V
14	Output V_1 0 V
16	Output + V_2
18	Output V_2 0 V
20	Output + V_3
22	Output V_3 0 V
24	–
26	External ON/OFF
28	Input +Vi
30	Input 0 V
32	PE ⏚

Power supplies – Accessories

Accessories

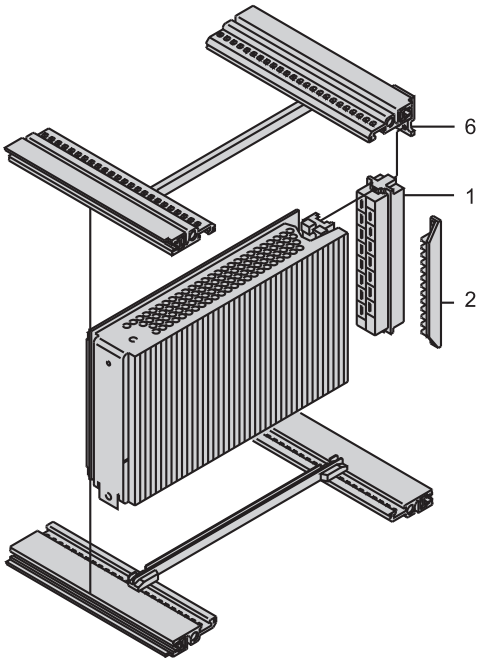

PSA45379

- For slimpower, maxpower, coolpower and linear regulators
- Z-rail (item 6)
- Mating connector female H 15 F (item 1)
- Coding (item 2)
- Wall/horizontal rail mounting

Z-rail, 4 HP

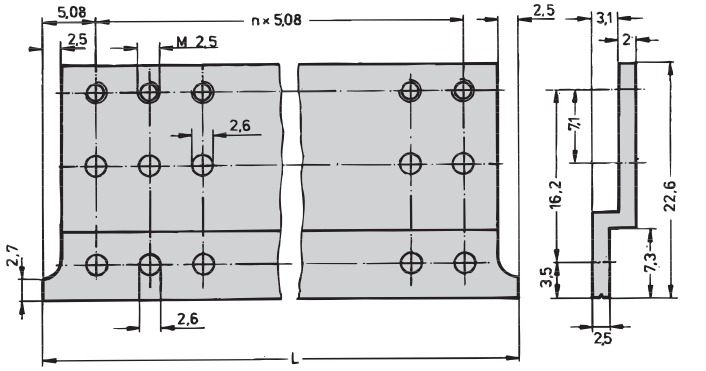

A3-420

- For bolting a H15 F connector to the rear horizontal rail/case (item 6)
- Provides the standard plug-in depth of the PSUs

Order Information

Description	Qty/PU	Part no.
Z-rail, 4 HP (20.32 mm)	1	**30822-166**

Note

- Two Z-rails are required per connector

Connector H 15 F

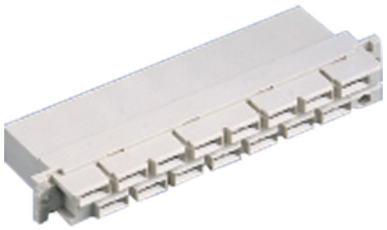

05592018

- Connector EN 60603 (DIN 41612) H15 F for 6.3 mm FASTON
- In 19" power supply units the H 15 male connector is fitted, PIN 32 with capacitive earthing contact
- Compatible with connector H15 M of e.g. 19" plug-in equipment

Order Information

Item	Description	Qty/PU	Part no.
1	Type H	1	**69001-733**

Power supplies – Accessories

Keying/coding

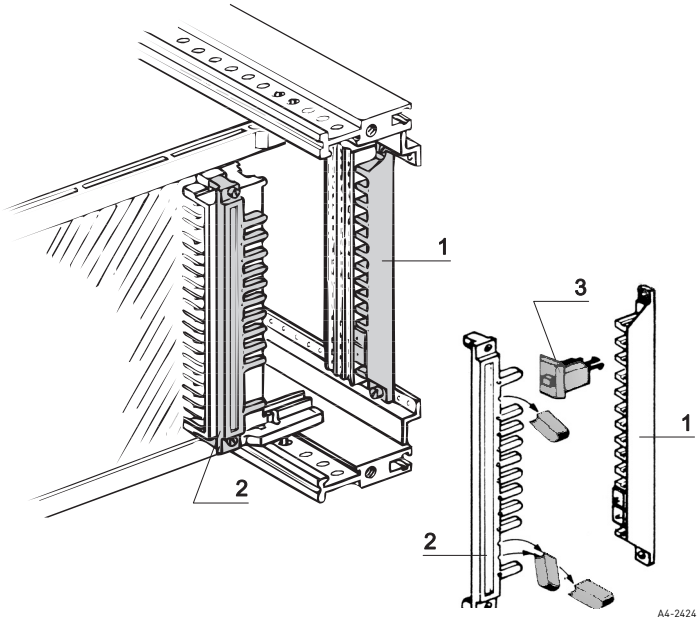

- Mechanical coding prevents a PSU being fitted on the wrong slot, space requirement 4 HP
- Coding:
  - Female strip (item 2), fitted on PSU (except slimpower)
  - Coding strip (item 1) mounts on the Z/horizontal rail
  - Placement of coding pins (item 3) in the coding strip (item 1)
  - Removal of studs at the appropriate place in the female strip
- With 2 coding pins there are 66 coding possibilities

Order Information

Description	Part no.
Keying/coding strip, Crastin (UL 94 V-0) 1 piece, keying/coding pins, Crastin (UL 94 V-0), 2 pieces	**60800-123**

Wall/horizontal rail mounting

11395007

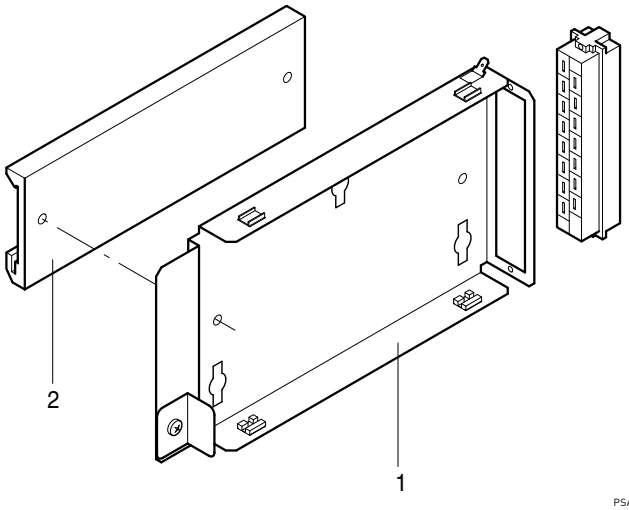

PSA45389

- Suitable for 19"-compatible 3 U PSUs
- 2 mounting options
  - Wall mounting bracket can be fitted in any position with screws and PSU is inserted
  - Horizontal rail adaptor is bolted to wall mounting bracket, then the 19" PSU can be clipped to a horizontal rail

Order Information

Item	Description	Qty/PU	Part no.
1	Wall mounting bracket, St	1	**11000-001**
2	Horizontal rail adaptor bracket, Al	1	**11000-002**
Connector H 15 F FASTON connection, 1 piece			**69001-733**

Power supplies – MicroTCA

AC/DC, double full-size, with power management (EMMC)

11316001

- Mains input at front with wide input voltage range for AC voltages with IEC locking system
- Construction compatible with AdvancedMC double full-size
- Supports N+1 and 2+2 redundancy, load sharing and hot swap
- Power management for 16 current channel (12 AMC, 2 CU and 2 MCHs)
- High efficiency
- Visual performance display

The MTCA PSU 600 is an exceptionally efficient power module (PM) for MicroTCA® applications. This 600W power supply is the most efficient available in double-width full-size format. This PM's integrated management controller makes it ideally suited for use in complex communications systems running the latest generations of processors and an increased number of AMC modules. The MTCA PSU 600 provides the power required for 12 AMCs, 2 Cooling Units (CUs) and 2 MicroTCA® Carrier Hubs (MCHs).

Delivery includes

Qty.	Description
1	PSU for MicroTCA Double height (148.3 mm) Full-size width (6 HP) Depth 186.65 mm Connector MicroTCA Power Front panel with handle and EMC gasket (fitted)

Order Information

Voltage V	Current A	Power W	Description	Part no.
V1: 12 V_2: 3.3	I_1: 6.8 I_2: 0.18	600	MTCA PSU 600	**11098-547**

Power supplies – for MicroTCA

AC/DC, double full-size, without management

11309004

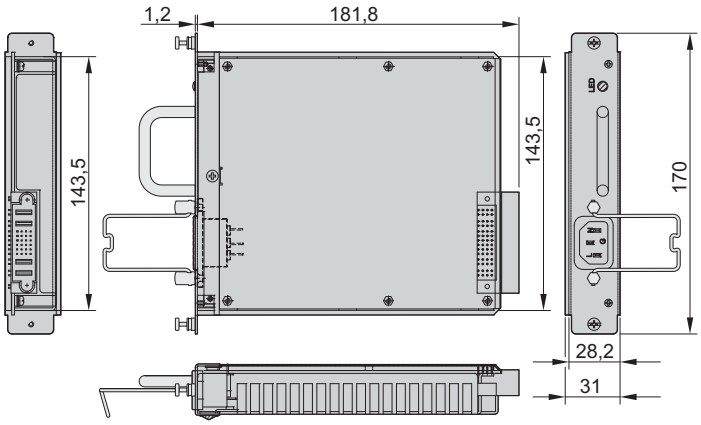

11312050

- Wide input voltage range 90 ... 264 V_{AC}
- Active power factor correction
- Construction compatible with AdvancedMC double full-size
- Single-wire current share cable for redundancy operation
- 2 output voltages, 12 V and 3.3 V
- Corresponds to EMC class B as per EN 55022
- Without MicroTCA power management controller
- Mains input at front

Delivery comprises

Qty	Description
1	PSU for MicroTCA height double (148.3 mm) width full-size (6 HP) depth 186.65 mm connector Molex SSI front panel with handle and EMC gasket (fitted)

Order Information

Voltage V	Current A	Power W	Description	Part no.
V1: 12 V_2: 3.3	I_1: 25 I_2: 3	300	MCA 300 AC	**11098-392**
V1: 12 V_2: 3.3	I_1: 45.8 I_2: 3	550	MCA 550 AC	**11098-416**

Note

- Output data for T_A = -25 ... 55 °C with forced cooling of 20 cfm
- Connector FCI 51720-10202402AA or Molex 87631-2019

Power supplies – for VMEbus

AC/DC, 19", 6 U, triple

11301002

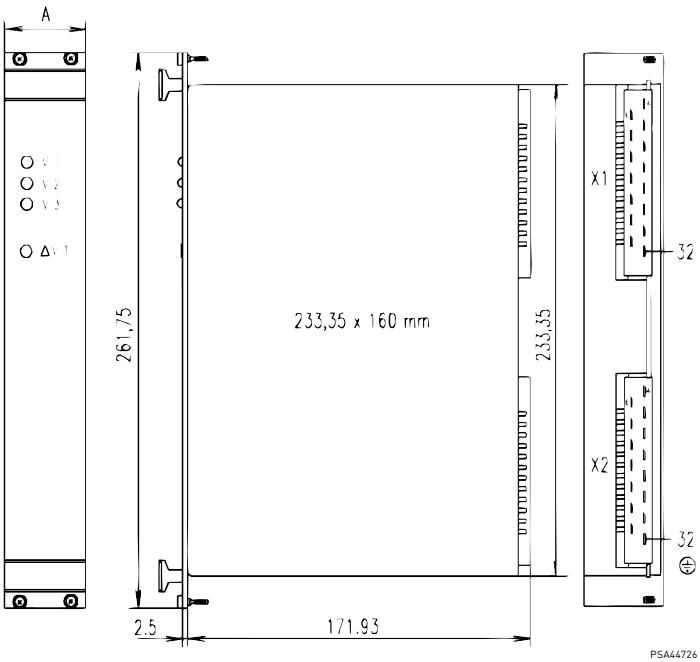

PSA44726

- Wide input voltage range 90 ... 264 V_{AC} and 130 ... 350 V_{DC} with active power factor correction (PFC)
- 3 output voltages
- VMEbus signalling

Delivery comprises

Qty	Description
1	19" compatible power supply height 6 U width A: 8, 12 HP depth 171.93 mm (160 mm board depth) front panel with handles (fitted) connector H 15 M (2 pieces) coding strip (2 pieces, fitted)

Order Information

Voltage V	Current A	Power W	Width HP	Description	Part no.
V1: 5 V_2: 12 V_3: -12	I_1: 20 I_2: 4 I_3: 3	150 (60)	8	MPS 015	13100-205
V1: 5 V_2: 12 V_3: -12	I_1: 28 I_2: 7 I_3: 3	224 (84)	12	MPS 022	13100-203
V1: 5 V_2: 15 V_3: -15	I_1: 28 I_2: 5.6 I_3: 2.4	224 (84)	12	MPS 022/15	13100-204
EMC gaskets (stainless steel) 6 U, 232 mm, stainless steel, 2 pieces necessary per front panel, PU 10 pieces					**21101-707**
Connector H 15 F Mating connector (female) for wiring inputs/outputs (6.3 mm FASTON), 1 piece					**69001-733**
Coding PU (1 keying/coding strip, 2 pieces keying/coding pins)					**60800-123**

Note

- Output data at T_A = 0 ... 40 °C
- Values in brackets: Output power V_2 + V_3
- Further accessories see page 9.16

Connector pin-out

Pin	Connection x1 (at top)	Connection x2 (at bottom)
4	Output + V_1	ACFAIL
6	Output + V_1	SYSRESET
8	Output + V_1	–
10	Output + V_1	Current Share Bus
12	Output + V_1	Shutdown 4 ... 28 V
14	Sense line + V_1	GND Shutdown
16	Output - V_3	–
18	Output 0 $V_{1,2,3}$	–
20	Output 0 $V_{1,2,3}$	–
22	Output 0 $V_{1,2,3}$	–
24	Output 0 $V_{1,2,3}$	–
26	Output 0 $V_{1,2,3}$	–
28	Output + V_2	L
30	Output + V_2	N
32	Sense line 0 V_1	PE y

Power supplies – for VMEbus

AC/DC, open frame, triple

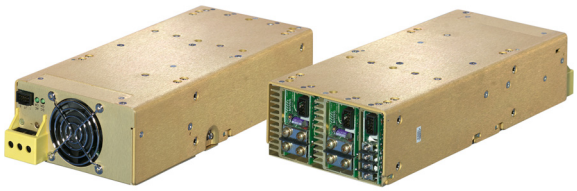

- For VME applications
- Wide input voltage range 85 ... 264 VAC
- 3 output voltages
- High performance
- Output power 444 ... 800 W

Photo shows MP6 PSUs

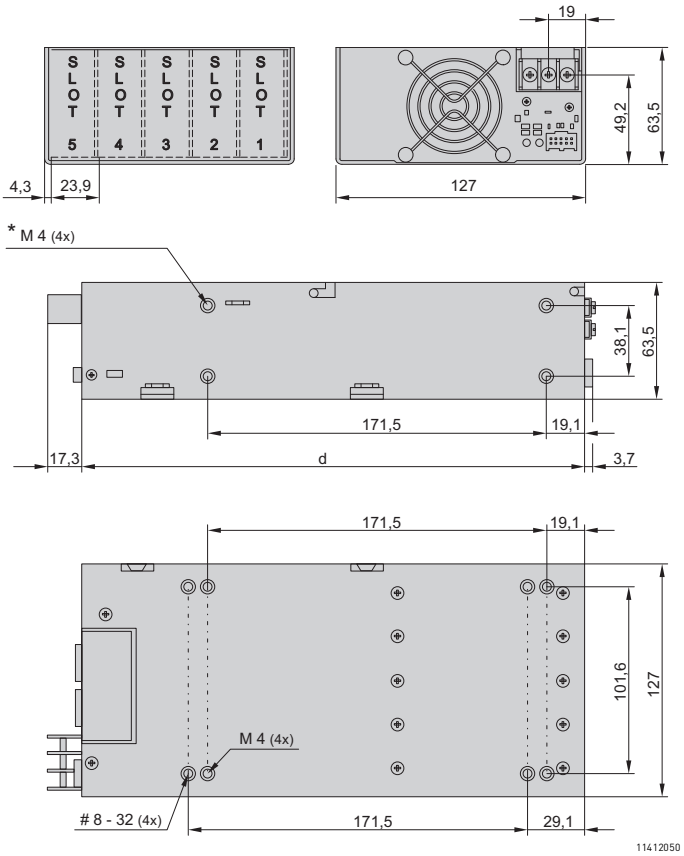

* Assembly holes identical on both sides

Delivery comprises

Qty	Description
1	Open frame PSU

Order Information

Voltage V	Current A	Power W	Description	d mm	Part no.
V1: 5 V_2: 12 1) V_3: 12	I_1: 60 I_2: 10 I_3: 4	444 2)	MP4 2E-4LL-00	254.0	11098-267
V1: 5 V_2: 12 V_3: 12	I_1: 60 I_2: 17 I_3: 17	708 3)	MP6 2E-1L-1L-00	279.4	11098-266
V1: 5 V_2: 12 1) V_3: 12	I_1: 120 I_2: 10 I_3: 4	744 3)	MP6 3E-4LL-00	279.4	11098-140
V1: 5 V_2: 12 1) V_3: 12	I_1: 120 I_2: 17 I_3: 17	800 3)	MP6 3E-1L-1L-00	279.4	11098-231

Accessories

Set of connectors with all input/output connectors, PU 1 kit	**21009-038**

1) 10 % base load necessary, sum of 12 V outputs max. 144 W
2) Output max. 400 W at 85 V_{AC} ... 180 V_{AC}
3) Output max. 600 W at 85 V_{AC} ... 180 V_{AC}

Note

- Output data at -20 °C ... +50 °C
- Input: AC 85 ... 264 V (47 ... 440 Hz), DC 120 ... 350 V
- Output voltages adjustable, w10 %
- Signalling: Input ok, DC output ok
- Other output voltages available on request

Power supplies – for CompactPCI Serial

19" switched-mode power supply for CompactPCI Serial

11315001

- 19" pluggable PSU for CompactPCI Serial applications
- Very wide input voltage range for both AC and DC
- Active power factor correction and active current-share function
- N+1 redundancy, hot swap
- Output signaling: PS present, power failure, PO ON and enable
- I2C interface
- Temperature monitoring
- Sense line
- UL, cUL and DEMKO certificates, CE-compliant

CE cULus TÜV SÜD CompactPCI®

Delivery includes

Qty	Description
1	19"-compatible PSU Height 3 U Width 8 HP 160 mm board depth PwrBlade connector (fitted) Front panel with handle and EMC contact strip (fitted)

Order Information

Voltage V	Current A	Power W	Input voltage	Part no.
V1: 12 V_2: 5	I_1: 25 I_2: 2.5	300	AC: 90 ... 264 V	**11098-538**
Accessories				
CompactPCI Serial power backplane, 3 U, 8 HP, 1 slot 1 piece				23098-397

Power supplies – for CompactPCI and VME64x

AC/DC, 19", 3 U, quad

11302005

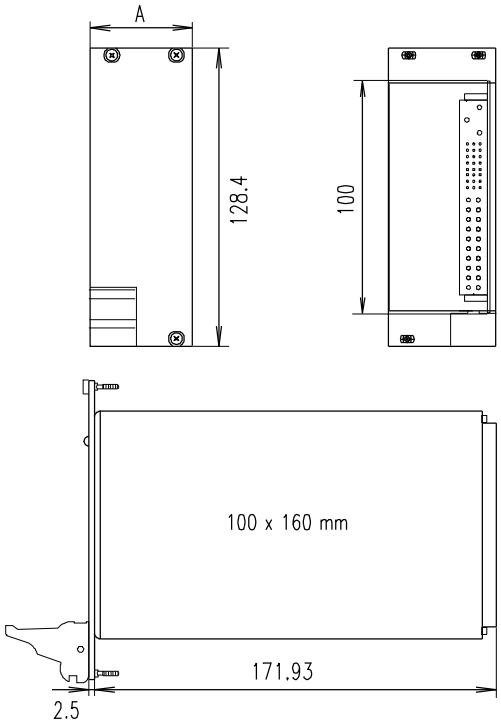

11302052

- Wide input voltage range 90 ... 264 V_{AC} with power factor correction (PFC)
- 4 output voltages
- Connector P 47
- Redundant operation with Current Share Bus (CSB), hot-swap
- CompactPCI signalling

CE cULus TÜV CompactPCI®

Delivery comprises

Qty	Description
1	19" compatible power supply height 3 U width A 8 HP depth 171.93 mm (160 mm board depth) connector P 47 front panel with handles and EMC gasket fitted

Order Information

Voltage V	Current A	Power W	Description	Part no.
V1: 5 V_2: 3.3 V_3: 12 V_4: -12	I_1: 40 I_2: 40 I_3: 5.5 I_4: 2	250	CPCI 250 AC	**13100-141**
Power backplane with P47 connector 3 U, width 39.6 mm, 1 × connector position P47, 1 piece				**23098-105**
Power backplane with P47 connector 3 U, width 80.3 mm, 2 x connector positions P47 (side-by-side), 1 piece				**23098-115**
Power backplane with P47 connector 6 U, width 39.6 mm, 1 × connector position P47, top, 1 piece				**23098-116**
Power backplane with P47 connector 6 U, width 39.6 mm, 2 × connector position P47, one above the other, 1 piece				**23098-117**
Guide rail with keying/coding, groove width 2.0 mm, with 0.1" offset Standard pack quantity 50 pieces				**64560-071**

Note

- Output data at T_A = 0 ... 50 °C with forced air cooling of 2 m/s
- 47-pin CompactPCI connector to PICMG 2.11 specification

Power supplies – for CompactPCI and VME64x

AC/DC, 19", 6 U, quad

11308007

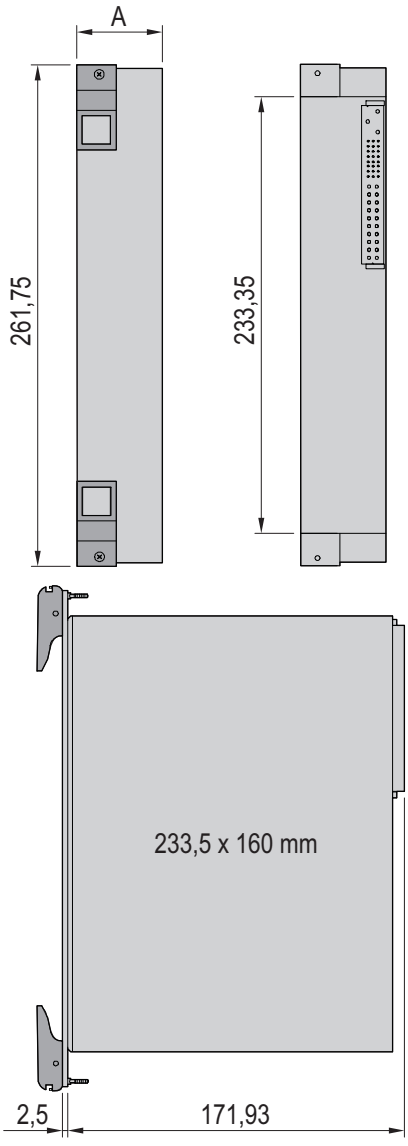

11302051

- Wide input voltage range 90 ... 264 V_{AC} with power factor correction (PFC)
- 4 output voltages
- Connector P 47
- Redundant operation with Current Share Bus (CSB), hot-swap
- CompactPCI signalling

Delivery comprises

Qty	Description
1	19" compatible power supply height 6 U width A: 8 HP depth 171.93 mm (160 mm board depth) connector P 47 front panel with handles and textile EMC gasket fitted

Order Information

Voltage V	Current A	Power W	Description	Part no.
V1: 5 V_2: 3.3 V_3: 12 V_4: -12	I_1: 50 I_2: 60 I_3: 12 I_4: 4	500	CPCI 500 AC	13100-145
Power backplane with P47 connector 6 U, width 39.6 mm, 1 × connector position P47, top, 1 piece				**23098-116**
Guide rail with keying/coding, groove width 2.0 mm, with 0.1" offset , Standard pack quantity 50 pieces				**64560-071**

Note

- Output data at T_A = -25 ... 55 °C with forced air cooling of 1.5 m/s
- 47-pin CompactPCI connector to PICMG 2.11 specification

Power supplies – for CompactPCI and VME64x

AC/DC, open frame, 300 W, quad

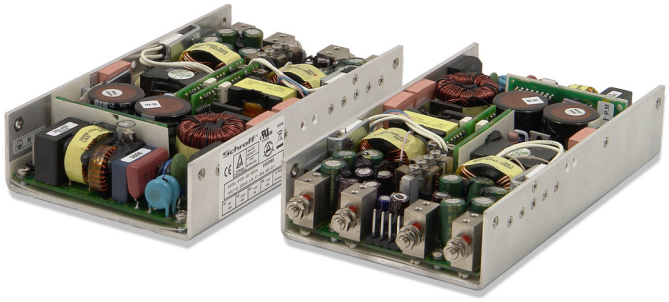

11408002

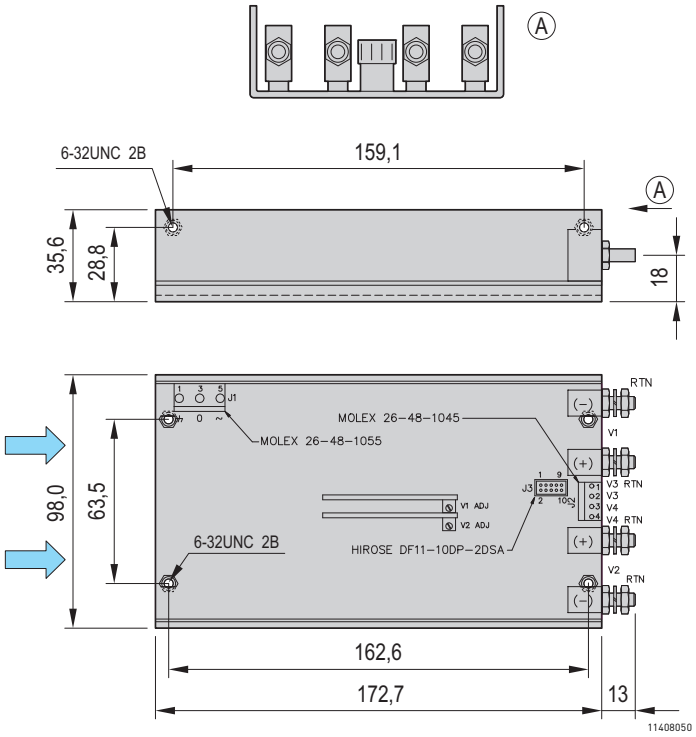

11408050

- For CompactPCI and VME64x applications
- Wide input voltage range 85 ... 264 V_{AC}
- 4 output voltages
- High performance, efficiency typically 85 %
- Output power 300 W
- Signalling: Output voltage OK

Delivery comprises

Qty	Description
1	Open frame power supply, dimensions 36 x 99 x 173 mm; weight 850 g

Order Information

Voltage	Voltage min. ... max.	Current	Power	Description	Part no.
V	V	A	W		
V1: 5 V_2: 3.3 V_3: 12 V_4: 12	4.75 ... 5.25 3.14 ...3.46 – –	I_1: 40 I_2: 40 I_3: 4 I_4: 1.5	300	EF306-433	**11098-316**
Set of connectors with all input and output plugs, PU 1 kit					21009-039

Note

- Output data at -5 °C ... 50 °C
- Output voltages 5 V and 3.3 V adjustable, w 10 %
- Forced cooling at 2 m/s (230 lfm) required
- With remote-control function Ext. ON/OFF
- With auxiliary supply 5 V/ 5 mA

Power supplies – for CompactPCI and VME64x

AC/DC, open frame, 600 W, quad

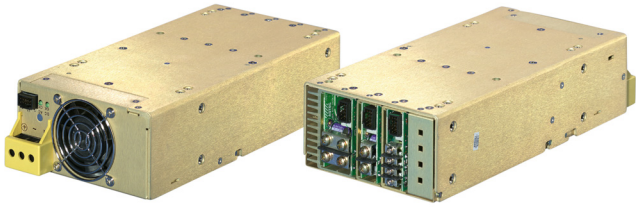

- For CompactPCI and VME64x applications
- Wide input voltage range 85 ... 264 V_{AC}
- 4 output voltages
- High performance

Photo shows 11098-212

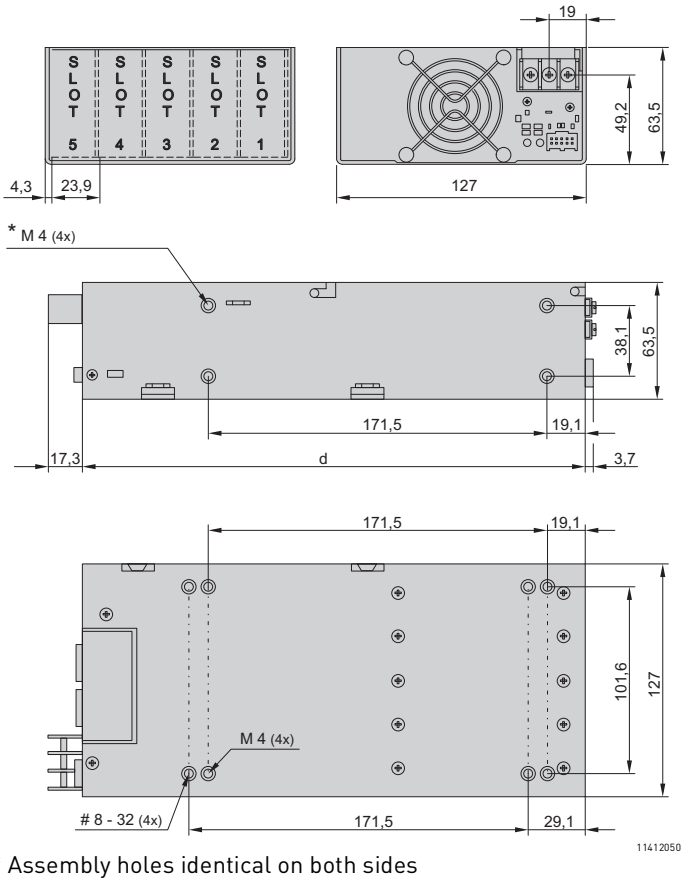

* Assembly holes identical on both sides

Delivery comprises

Qty	Description
1	Open frame PSU

Order Information

Voltage V	Current A	Power W	Description	d mm	Part no.
V1: 5 V_2: 3.3 V_3: 12 V_4: 12	I_1: 60 I_2: 35 I_3: 10 I_4: 4	560 [2]	MP4 2E-1D-4LL-00	254.0	11098-212
V1: 5 V_2: 3.3 V_3: 12 V_4: 12	I_1: 60 I_2: 60 I_3: 10 I_4: 4	642 [3]	MP6 2D-2E-4LL-00	279.4	11098-207
Accessories					
Set of connectors with all input and output plugs, PU 1 kit					21009-039

1) 10 % base load necessary, sum of 12 V outputs max. 144 W
2) Output max. 400 W at 85 V_{AC} ... 180 V_{AC}
3) Output max. 600 W at 85 V_{AC} ... 180 V_{AC}

Note

- Output data at -20 °C ... 50 °C
- Input: AC 85 ... 264 V (47 ... 440 Hz), DC 120 ... 350 V
- Output voltages adjustable, w10 %
- Signalling: Input ok, DC output ok
- Other output voltages available on request

DC/DC, 19", 3 U, quad

11302005

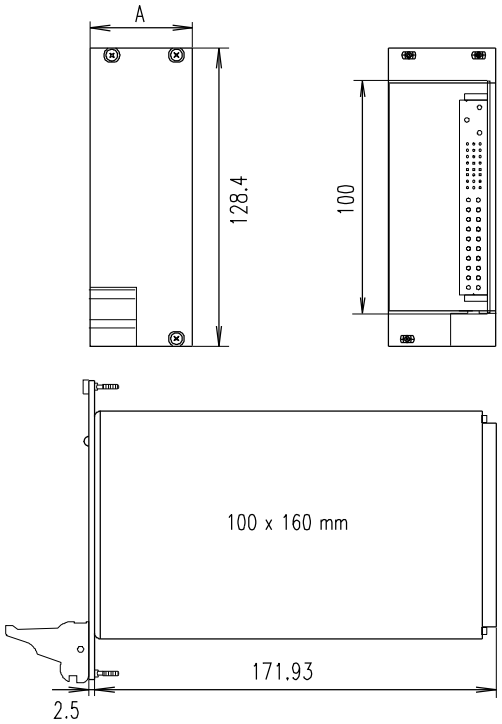

11302052

- Input voltage 48 V_{DC} (36 ... 75 V_{DC})
- 4 output voltages
- Connector P 47
- Redundant outputs with Current Share Bus (CSB), hot-swap
- CompactPCI signalling

Delivery comprises

Qty	Description
1	19" compatible power supply height 3 U width A: 8 HP depth 171.93 mm (160 mm board depth) connector P 47 front panel with handle and EMC contact strips (fitted)

Order Information

Voltage V	Current A	Power W	Description	Part no.
V1: 5 V_2: 3.3 V_3: 12 V_4: -12	I_1: 40 I_2: 40 I_3: 5.5 I_4: 2	250	CPCI 250 DC	13100-142
Power backplane with P47 connector 3 U, width 39.6 mm, 1 × connector position P47, 1 piece				**23098-105**
Power backplane with P47 connector 3 U, width 80.3 mm, 2 x connector positions P47 (side-by-side), 1 piece				**23098-115**
Power backplane with P47 connector 6 U, width 39.6 mm, 1 × connector position P47, top, 1 piece				**23098-116**
Power backplane with P47 connector 6 U, width 39.6 mm, 2 × connector position P47, one above the other, 1 piece				**23098-117**
Guide rail with keying/coding, groove width 2.0 mm, with 0.1" offset Standard pack quantity 50 pieces				**64560-071**

Note

- Output data at T_A = 0 ... 50 °C, with forced air cooling of 2 m/s
- 47-pin CompactPCI connector to PICMG 2.11 specification

Power supplies – for CompactPCI and VME64x

DC/DC, 19", 6 U, quad

11303002

- Input voltage range 48 V_{DC} (36 ... 72 V_{DC})
- 4 output voltages
- Connector P 47
- Redundant outputs with Current Share Bus (CSB), hot-swap
- Compact PCI signalling

Delivery comprises

Qty	Description
1	19" compatible power supply height 3 U width A: 8 HP depth 171.93 mm (160 mm deep boards) connector P 47 (fitted) front panel with handles and EMC contact strip (fitted)

Order Information

Voltage V	Current A	Power W	Description	Part no.
V1: 5 V_2: 3.3 V_3: 12 V_4: -12	I_1: 50 I_2: 60 I_3: 12 I_4: 4	500	CPCI DC-6U-500	13100-146
Power backplane with P47 connector 6 U, width 39.6 mm, 1 × connector position P47, top, 1 piece				**23098-116**
Guide rail with keying/coding, groove width 2.0 mm, with 0.1" offset Standard pack quantity 50 pieces				**64560-071**

Note

- Output data at T_A = -10 ... 55 °C with forced air cooling of 2 m/s
- 47-pin CompactPCI connector to PICMG 2.11 specification

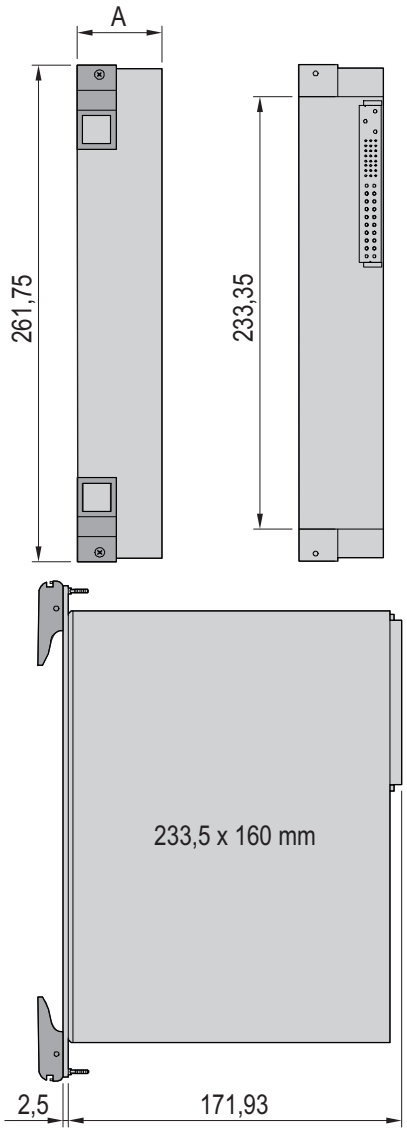

11302051

Power supplies – ServicePLUS

configuration	Simple. Fast. To the ideal product.
Components can be varied and combined freely	■ Configurations, based on our standard range of AC/DC or DC/DC converters – Number of output voltages – Heights, widths, depths ■ Online configuration enquiries: www.schroff.co.uk/configuration

assembly	Assembled by professionals. Double benefit!
Front panel and handle mounting	■ Front panel mounting

modification	Small changes. Large impact.
Modification of off-the-shelf products	■ Minor modifications, e.g. other set output voltages, protective finishes

solution	Simple. Fast. From one source.
Integration and custom developments	■ Development and design to customer specification; manufacture of prototypes, pre-production and production series, certification

academy	Knowledge. Sharing. Partnerships.
Knowledge transfer and partnership	■ Training, test reports, user reports, certificates, user manuals for download

lifecycle	We are with you. For the entire product life.
Flexible support throughout the product lifecycle	■ Repair, fast and straightforward, via online RMA form

Power supplies – ServicePLUS

Application examples and special devices created to customer specifications

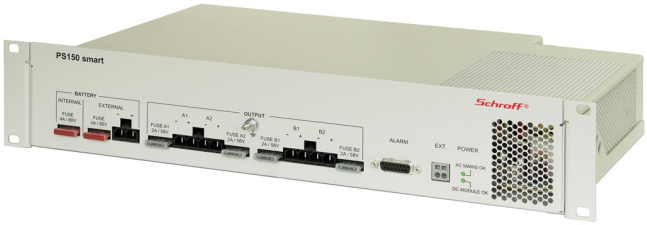

11308002 11309004

Application: Redundant and uninterruptible 19" DC power supply units

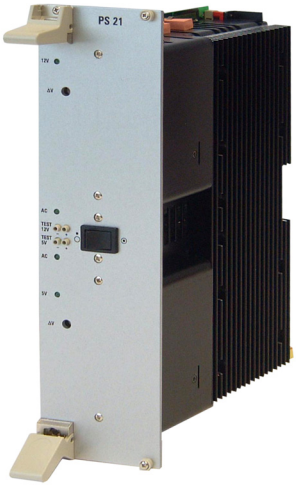

11309002

Application: AC/DC switch-mode PSU for power supply to video monitoring systems

11309003

Application: AC/DC switch-mode power supply for telecommunications applications

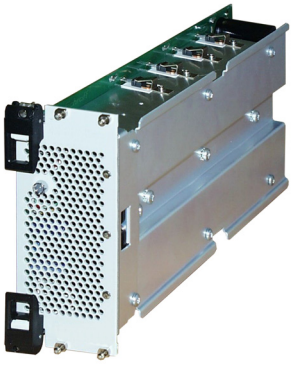

11309001

Application: AC/DC linear regulator for communications systems (defence systems)

11309005

Application: DC/DC converter for railway applications

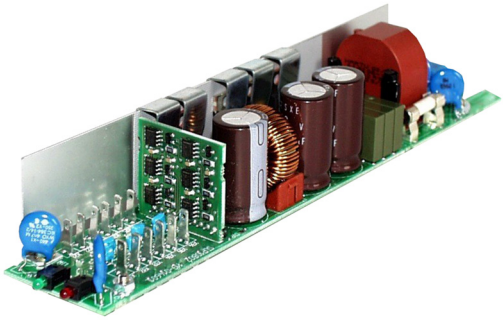

11309005

Application: DC/DC converter for supply power to fans (with monitoring)

Cabinets 1

Wall mounted cases 2

Accessories for cabinets and wall mounted cases . 3

Climate control . 4

Electronics cases 5

Subracks/ 19" chassis 6

Front panels, plug-in units . . . 7

Systems 8

Power supply units 9

Backplanes . . . 10

Connectors, front panel component system 11

Appendix 12

CompactPCI Serial

CompactPCI PlusIO

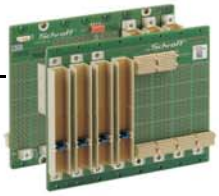

CompactPCI backplanes and bridges

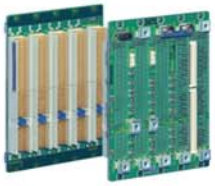

CompactPCI, PSB and H.110 backplanes

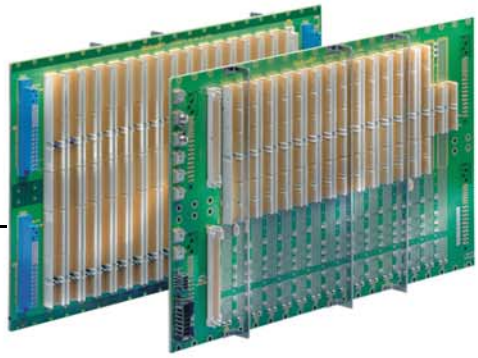

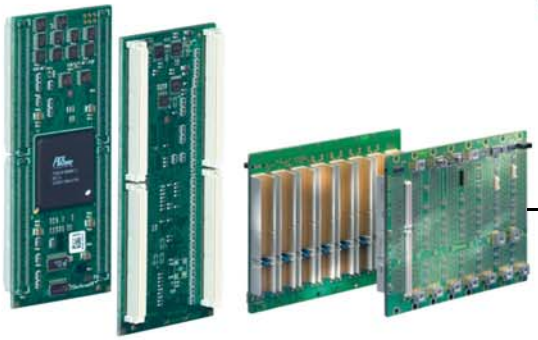

PXI backplanes

VPX backplanes

36106009 (10506003 10506002 10502001 10508008 12406002 12406001 12406004 12402004)

Backplanes

Overview 10.0

Backplanes 10.2

CompactPCI
Serial 10.4
Plus I/O 10.6
System slot right . 10.7
System slot left .. 10.8
Packet switching, H.110 backplanes 10.9
Bridge 10.10
Secondary, system slot right . 10.11

PXI
Backplanes 10.12

VPX 10.13

VXS 10.16

VME64 extension 10.15

VMEbus
Monolithic J1/J2 . 10.17
J1 (3 U) 10.18
J2 (3 U) 10.19

Power backplanes
With P47 connector 10.20
Power Piggyback 10.20

Universal backplanes
Backplane with/ without through-connected signal lines 10.21

Test adaptors
Types B, C, D, E, F, H, M 10.22
For VMEbus 10.26
Board guides 10.28
Type/board versions 10.29
Dimensions test adaptors..... 10.29

Assembly material 10.30

ServicePLUS ... 10.31

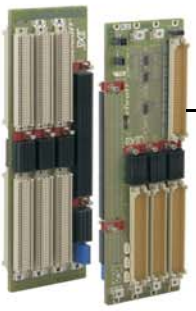

VXS backplanes

VME64x backplanes

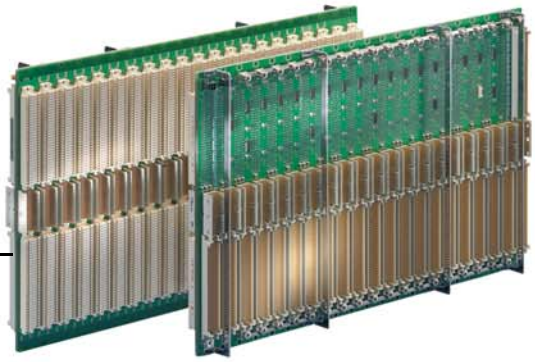

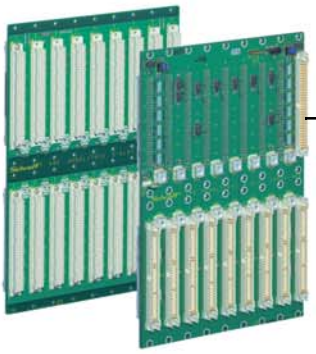

VME backplanes

Power and universal backplanes

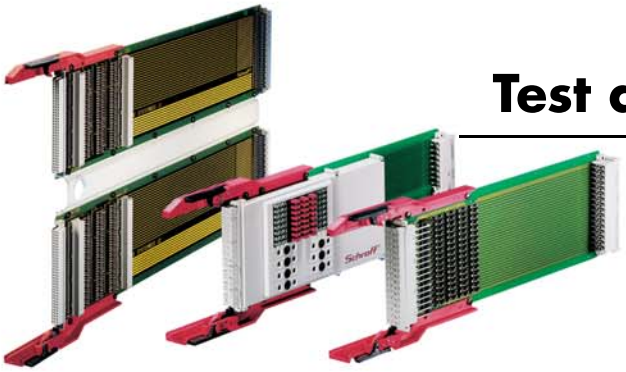

Test adaptors

36106010 (12402005 12606003 12406003 12606005 12096003 11902001 11192004 11100013 11100010)

Backplanes

Our competence in overview

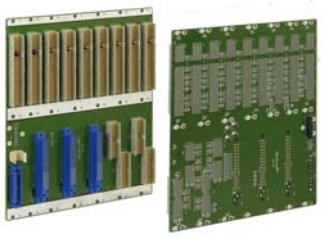

Custom backplane

Project management

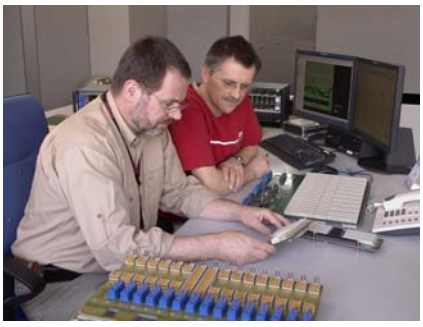

Development

Layout

Test laboratory

Comprehensive standard backplane programme

AdvancedTCA - MicroTCA - CompactPCI - VME - Schroff offers you an extensive standard backplane programme that is already ideally matched to your requirements. Should you still not find your backplane in our range, we can develop or modify to create your tailor-made backplane, quickly and on attractive terms. All our developing and manufacturing is done in-house and competent personnel are available at any time to deal with technical questions, quotes and project support.

Custom development to customer requirements

From minor modifications to our standard backplanes through to specific form factors and connection topologies, Schroff has the right solution for you

One contact partner as customer interface

Competent personnel are available at any time for technical questions, quotes, project support and after-sales care. If you wish, we are also happy to help you generate the specification for your custom backplane. Contact at an early stage between our technical staff and our customers helps us to develop cost-optimised projects that meet all our customers' requirements.

Many years of experience

50 years of experience, continual fundamental research and innovation in the backplane sector. Active participation in standards committees and in the specification of new system architectures and high-speed transmission technologies.

Modern design tools

Modern simulation tools and measurement equipment plus in-house developed high-performance test adaptors. Development of new technologies and topologies using high-speed measurements performed in-house.

Backplanes

Our competence in overview

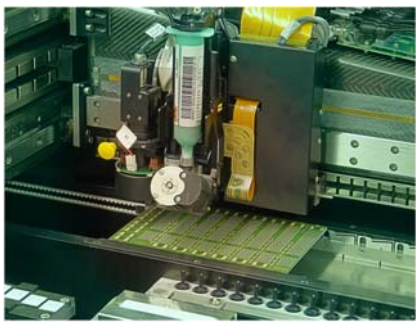

Solder paste printing

Automatic optical inspection (AOI)

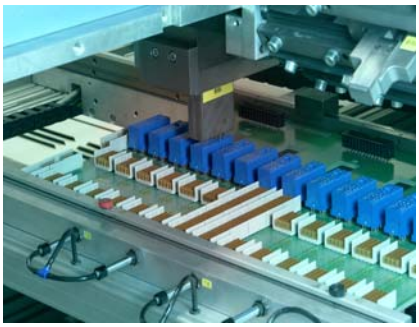

Connector mounting

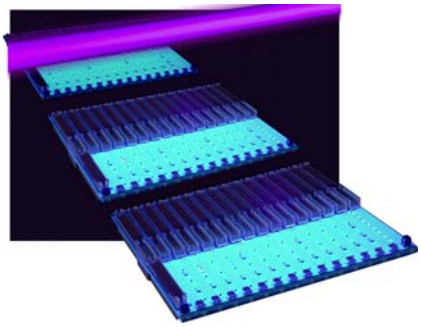

Conformal coating

Electrical final test

Modern machine facilities in Straubenhardt

Solder paste printing is one of the quality-defining process steps in backplane manufacture. This solder-paste printer, based on innovative inkjet technology, allows fast, flexible and highly dependable solder paste printing. Since the process dispenses with the 'stencils' required by other methods, the printing program
can be changed in a very short time. This means that small batches can also be printed cost-effectively.

Our modern **SMD placement machines** support a wide spectrum of components with a high placement performance. Small and large production runs can be implemented flexibly and time-efficiently.

Vapour-phase soldering, also known as vapour-phase reflow, is currently the most universal and most reliable soldering process.
It is ideally suited to all types of SMD component and carrier material. The homogenous temperature distribution of the carrier medium allows the widest variety of sub-assemblies, from Flexprints to multilayer boards, to be soldered reliably without danger of overheating.

There is also the option of processing conventional components with our **wave-soldering system**.

Automatic optical inspection (AOI) is an optical test procedure for sub-assemblies equipped with components. Highly-developed image processing systems reliably detect faulty soldered joints and wrongly placed or missing components.

Connectors are pressed into the backplane fully automatically. The **press-in technique** allows quick and economic mounting of the connector without subjecting the PCB to thermal stress. The press-in action creates a gas-tight, dependably electrically conductive and mechanically strong connection. Intelligent force/displacement measuring during the press-in action ensures consistent high quality.

Backplanes that are subject to particular climatic stresses can be coated with a **protective lacquer (conformal coating)**. This coating protects the backplane from e.g. corrosion and mould. The fluorescent characteristic of the protective coating enables the coating to be checked for completeness or damage under UV light.

No backplane leaves our production facility without **100% testing**. All backplanes are subjected to extensive electrical testing before despatch. An automatic process checks the entire backplane for continuity and short circuits. This testing also covers passive and simple active components such as resistors, capacitors and diodes
and the description and testing of I2C EEPROMS or bus terminations. For this Schroff has a comprehensive automated and semi-automated testing facility.

Backplanes – CompactPCI Serial

CompactPCI Serial backplanes

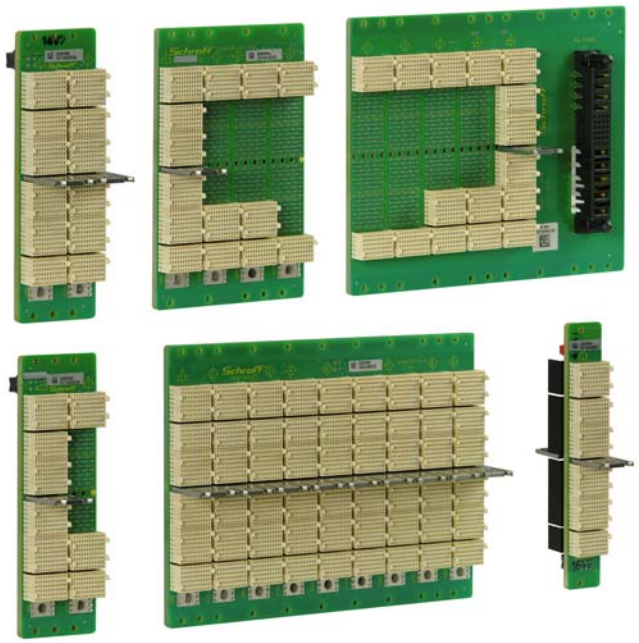

12415020

- Conforms to PICMG CompactPCI Serial (CPCI-S.0 R2.0) specification
- 1 system slot and 0 ... 8 peripheral slots
- Supports PCIe (Gen3), USB 2.0 and USB 3.0, S-ATA (II & Rev. 3.0) and Ethernet (10GBase-T)
- PCIe: Up to two 8 x lanes and up to six 4 x lanes
- Powerbugs for +12 V payload voltage and Minifit plug for +5 V standby voltage
- Utility connector on rear of backplane
- Mechanical centering and keying/coding strip in stainless steel on every fully equipped front and rear slot
- PICMG 2.9 IPMB plug can be fitted on request

Delivery includes

Item	Qty	Description
1	1	Backplane
2	1	Screw kit, M4 x 6, with lock washer; for connecting power to powerbugs

Order Information

Height U	Number of slots	System slot	Topology GbE	I/O at rear	Width mm	Description	Part no.
3	1	–	–	Yes	19.3	J1 plug for power, J2...J5, RP2...RP5 for rear I/O	23007-661
3	1	–	–	No	19.3	J1 plug for power	23007-621
3	1	–	Rear I/O on RP6	Yes	19.3	J1 plug for power, J2...J6, RP2...RP6 for rear I/O	23007-681
3	1	–	Rear I/O on RP6	No	19.3	J1 plug for power, J6, RP6 for rear I/O	23007-641
3	2	Left	Full mesh	Yes	39.6	For Ethernet single star and full-mesh applications	23007-682
3	2	Left	Full mesh	No	39.6	For Ethernet single star and full-mesh applications	23007-642
3	3	Left	Full mesh	No	60.0	For Ethernet single star and full-mesh applications	23007-643
3	3	Left	Full mesh	Yes	60.0	For Ethernet single star and full-mesh applications	23007-683
3	3	Right	Full mesh	Yes	60.0	For Ethernet single star and full-mesh applications	23007-693
3	3	Right	Full mesh	No	60.0	For Ethernet single star and full-mesh applications	23007-653
3	4	Left	Full mesh	Yes	80.3	For Ethernet single star and full-mesh applications	23007-684
3	4	Left	Full mesh	No	80.3	For Ethernet single star and full-mesh applications	23007-644
3	4	Right	Full mesh	No	80.3	For Ethernet single star and full-mesh applications	23007-654
3	4	Right	Full mesh	Yes	80.3	For Ethernet single star and full-mesh applications	23007-694
3	5	Left	Full mesh	Yes	100.6	For Ethernet single star and full-mesh applications	23007-685
3	5	Left	Full mesh	No	100.6	For Ethernet single star and full-mesh applications	23007-645
3	5	Right	Full mesh	Yes	100.6	For Ethernet single star and full-mesh applications	23007-695
3	5	Right	Full mesh	No	100.6	For Ethernet single star and full-mesh applications	23007-655
3	5	Right	Full mesh	Yes	159.9	Additional slot for one CompactPCI Serial PSU (3 U, 8 HP)	23007-615
3	5	Right	Full mesh	No	159.9	Additional slot for one CompactPCI Serial PSU (3 U, 8 HP)	23007-605
3	6	Right	Single star	No	120.9	For Ethernet single-star applications	23007-636
3	6	Right	Single star	Yes	120.9	For Ethernet single-star applications	23007-676
3	7	Left	Single star	No	141.2	For Ethernet single-star applications	23007-627
3	7	Left	Single star	Yes	141.2	For Ethernet single-star applications	23007-667
3	7	Right	Single star	No	141.2	For Ethernet single-star applications	23007-637
3	7	Right	Single star	Yes	141.2	For Ethernet single-star applications	23007-677
3	8	Left	Single star	No	161.6	For Ethernet single-star applications	23007-628
3	8	Left	Single star	Yes	161.6	For Ethernet single-star applications	23007-668
3	9	Left	Single star	Yes	181.9	For Ethernet single-star applications	23007-669
3	9	Left	Single star	No	181.9	For Ethernet single-star applications	23007-629
3	9	Right	Single star	Yes	181.9	For Ethernet single-star applications	23007-679
3	9	Right	Single star	No	181.9	For Ethernet single-star applications	23007-639
3	9	Left	Full mesh	Yes	181.9	For Ethernet single-star applications	23007-689
3	9	Left	Full mesh	No	191.9	For Ethernet single-star applications	23007-649

Backplanes – CompactPCI Serial

CompactPCI Serial power backplane

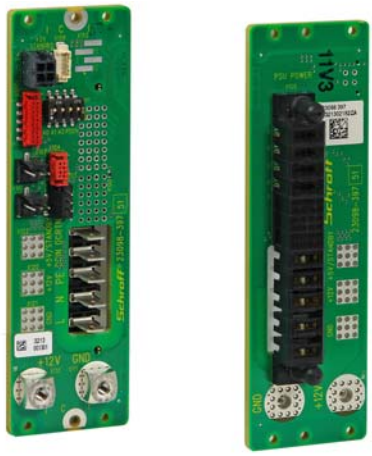

12415019

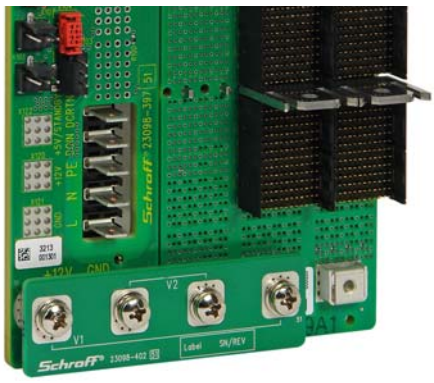

12415021

Application: Power backplane (left), CompactPCI Serial backplane (right) and connection via power adapter board (below)

- Power backplane for pluggable PSUs with FCI Power Blade plug
- 3 U, 8 HP, 1 PSU connector
- Separate inputs for AC and DC with Fastons
- Connector for 12 V, 5 V standby, utility signals, current sharing, power button, serial console to a UPS and digital I/O at the rear
- Optionally, the PICMG 2.9 SMBus plug and additional powerbugs for 12 V and 5 V standby can be fitted
- Geographical address can be set by means of a DIP switch

Delivery includes

Item	Qty	Description
1	1	CompactPCI Serial power backplane

Order Information

Height U	Number of slots	Width mm	Part no.
3	1	38.9	23098-397

Accessories for CompactPCI backplanes

- Cable sets for connecting power and status signals of CompactPCI Serial backplanes and power backplanes
- Power adapter boards for simple connection of 12 V main supply voltage between CompactPCI Serial backplanes and power backplanes

Order Information

Accessories	
Utility cable, single conductors, 600 mm, 1 x 10-pin Micro-Match 1 piece	23204-852
Utility flat ribbon cable, 650 mm, 4 x 10-pin Micro-Match 1 piece	23204-875
Standby cable, single conductors, 600 mm, 1 x 4-pin Microfit to 2 x ring cable eye 1 piece	23204-853
Standby cable, single conductors, 400 mm, 3 x 4-pin Microfit 1 piece	23204-866
Current-sharing flat ribbon cable, 150 mm, 2 x 4-pin Micro-Match 1 piece	23204-867
Power connection cable, for 1-slot backplane, single conductors, 600 mm, 1 x 6-pin Microfit to 2 x ring cable eye and 1 x 4-pin Microfit 1 piece	23204-869
Power connection cable, backplane to backplane, single conductors, 300 mm, 2 x ring cable eye to 2 x ring cable eye 1 piece	23204-879
AC input cable, single conductors, 500 mm, 3 x blade receptacles, open end 1 piece	23204-880
DC input cable, single conductors, 500 mm, 3 x blade receptacles, open end 1 piece	23204-881
CompactPCI Serial power backplane, 3 U, 8 HP, 1 slot 1 piece	23098-397
Power adapter board, 3 x V_1, 3 x V_2, 121212 1 piece	23098-399
Power adapter board, 2 x V_1, 2 x V_2, 1212 1 piece	23098-400
Power adapter board, 3 x V_1, 3 x V_2, 122121 1 piece	23098-401
Power adapter board, 2 x V_1, 2 x V_2, 1221 1 piece	23098-402

CompactPCI PlusIO

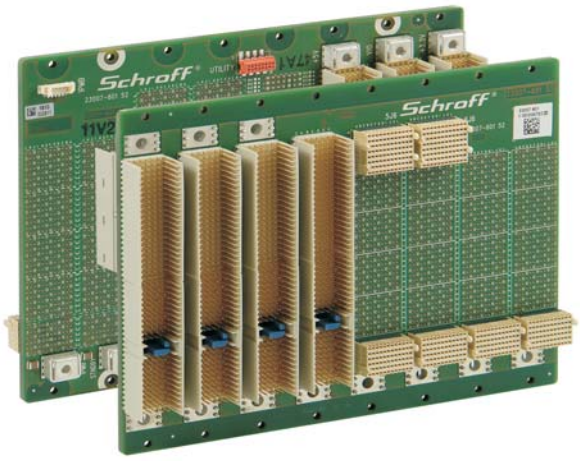

12411009

Photo shows 23007-601

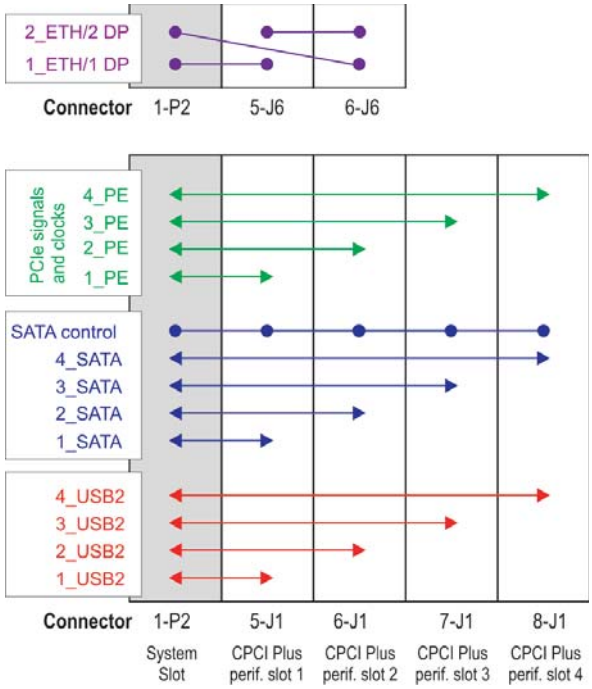

12409053

Topology shows 23007-601

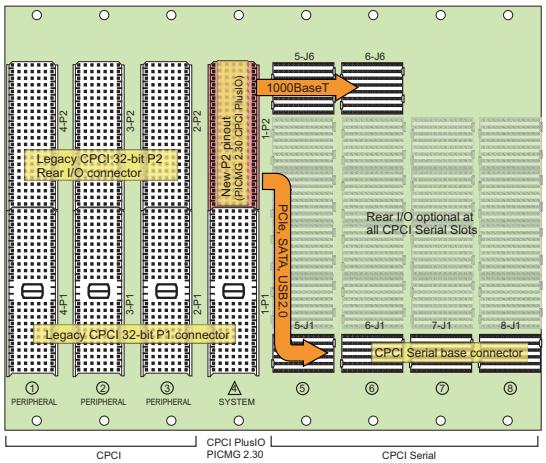

12409051

Front view

- In accordance with:
  - PICMG 2.0 R3.0 CompactPCI Core Specification
  - PICMG 2.1 R2.0 Hot-Swap Specification
  - PICMG 2.9 R1.0 System Management Bus Specification
  - PICMG 2.10 R1.0 Keying Specification
  - PICMG 2.30 R1.0 CompactPCI PlusIO specification
  - PICMG CompactPCI Serial (CPCI-S.0 R1.0) specification
- System slot in accordance with PICMG 2.30, 32-bit CPCI bus on P1, PCIe, S-ATA, USB & Ethernet on P2
- CompactPCI peripheral slots, 32 bit with rear I/O on P2
- CompactPCI Serial peripheral slots with PCIe x1, S-ATA and USB
- Full-mesh Ethernet on system slot and 2 CompactPCI Serial slots, supports 1000Base-T and 10GBase-T
- Rear I/O on the CompactPCI Serial slots available on request
- V(I/O) can be set to 3.3 V or 5 V (preset to 5 V)

Delivery comprises

Item	Qty	Description
1	1	Backplane
2	1	Set of screws, M4x6, with lock washer; to attach the power connection cable to the power bugs

Order Information

Number of slots	Width mm	Height U	Part no.
3 CPCI + 2 CPCI Serial	102.2	3	**23007-602**
4 CPCI + 4 CPCI Serial	161.3	3	**23007-601**
Accessories			
SM bus/IPMB cable 4 individual wires with SMB plug to open end, length 750 mm, 1 piece			**23204-113**
Kit to convert V I/O to 3.3 V 8 coding tabs, yellow, coding key, PU 1 kit			**21101-658**
Utility cable MicroMatch with single conductors, length 600 mm, 1 piece			**23204-812**
Utility cable MicroMatch with flat ribbon cable, length 600 mm, 1 piece			**23204-811**
Screws, washers for backplane mounting			**Page 10.30**

Backplanes – CompactPCI

CompactPCI backplane with system slot right

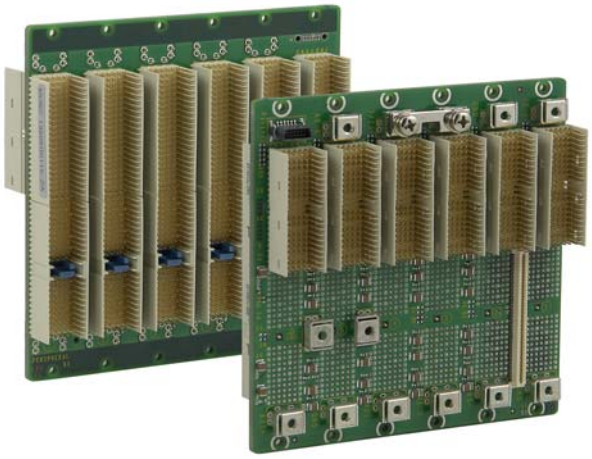

12408001

Photo shows 23006-816

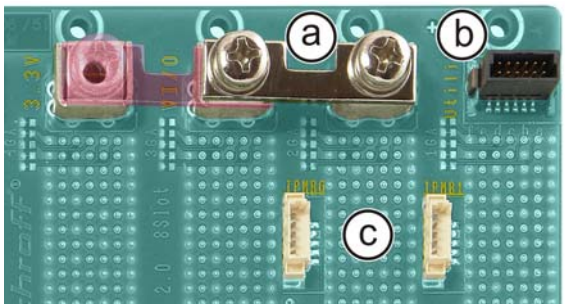

12408002

a: V(I/O) bridge; b: Utility connector; c: IPMB connector

ServicePLUS see page 10.31

- In accordance with
  - PICMG 2.0 R3.0 CompactPCI Core specification
  - PICMG 2.1 R2.0 Hot Swap specification
  - PICMG 2.9 R1.0 System Management Bus specification
  - PICMG 2.10 R1.0 Keying specification
- Versions: 3 U 32-bit and 64-bit, 6 U 64-bit, with system slot right
- V(I/O) adjustable to +3.3 V or +5 V (see photo)
- Backplanes up to 5 slot are 66 MHz capable, 6 to 8 slot backplanes are set for 33 MHz operation
- Outstanding high-frequency noise suppression and very high MTBF values due to ceramic capacitors
- Digital GND can be connected to/isolated from chassis GND by means of screws
- Infeed of supply voltages via powerbugs (ring tag M4), FASTONs
- Utility plug for status signals (SMCQ)
- Intelligent platform management bus (IPMB) connector to PICMG 2.9

Delivery comprises

Item	Qty	Description
1	1	CompactPCI backplane with coding tab and V(I/O) bridge, fitted
2	1	Set of 6 M4 bolts, with lock washer; for power connection

Note

- 4 to 7 slot backplanes can be used as primary backplane with bridge
- Types marked with an asterisk * are available on request
- CompactPCI backplanes and secondary bridges see from page 10.10

Order Information

Number of slots	Width mm	3 U, 32-bit, CompactPCI backplane 3.3 V V(I/O) Part no.	3 U, 32-bit, CompactPCI backplane 5 V V(I/O) Part no.	3 U, 64-bit, CompactPCI backplane 3.3 V V(I/O) Part no.	3 U, 64-bit, CompactPCI backplane 5 V V(I/O) Part no.	6 U, 64-bit, CompactPCI backplane 3.3 V V(I/O) Part no.	6 U, 64-bit, CompactPCI backplane 5 V V(I/O) Part no.
1	19.3	23006-331	**23006-811**	23006-331	**23006-811**	**–***	**–***
2	39.6	23006-332	**23006-812**	**–***	**–***	23006-372	**23006-862**
3	60.0	23006-303	**23006-813**	23006-353	**23006-833**	23006-373	**23006-863**
4	80.3	23006-334	**23006-814**	23006-354	**23006-834**	23006-374	**23006-864**
5	100.6	23006-301	**23006-815**	23006-355	**23006-835**	23006-375	**23006-865**
6	121.0	23006-336	**23006-816**	**–***	**–***	23006-376	**23006-866**
7	141.2	23006-337	**23006-817**	**–***	**–***	23006-377	**23006-867**
8	161.6	23006-300	**23006-818**	23006-358	**23006-838**	23006-378	**23006-868**

Accessories	
Kit to convert V I/O to 3.3 V 8 coding tabs, yellow, coding key, PU 1 kit	**21101-658**
Utility cable SMCQ with flat ribbon cable, length 350 mm,2 × 12-pin female connector, 1 piece	**23204-115**
Utility cable SMCQ with flat ribbon cable, length 600 mm,2 × 12-pin female connector, 1 piece	**23204-116**
Termination adaptor, 64-bit bus for 8 slot CompactPCI backplane, 1 piece	**23006-931**
SM bus/IPMB cable 4 individual wires with SMB plug to open end, length 750 mm, 1 piece	**23204-113**
Power Piggyback usable with backplanes with 3 slots and up, 1 piece	**23098-100**
Power backplane with P47 connector	**Page 10.20**
Screws, washers for backplane mounting	**Page 10.30**

Backplanes – CompactPCI

CompactPCI backplane with system slot left

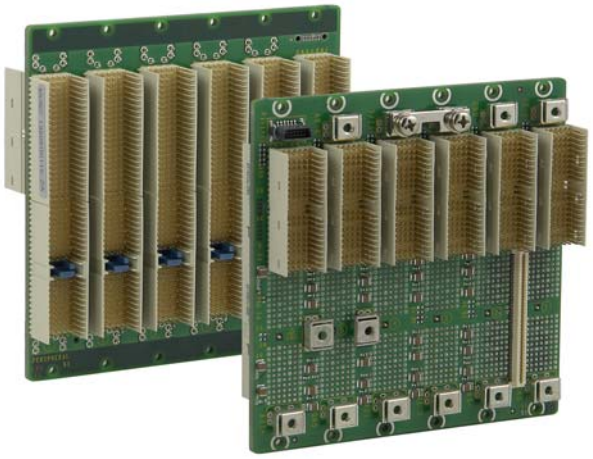

12408001

Photo shows 23006-816

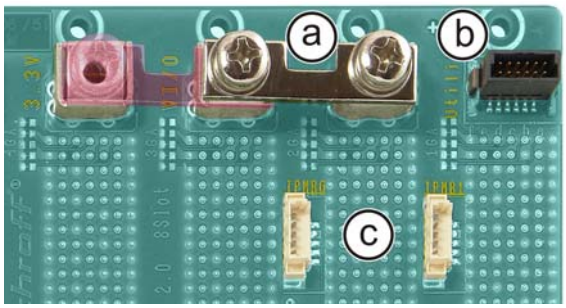

12408002

a: V(I/O) bridge; b: Utility connector; c: IPMB connector

ServicePLUS see page 10.31

- In accordance with
  - PICMG 2.0 R3.0 CompactPCI Core specification
  - PICMG 2.1 R2.0 Hot Swap specification
  - PICMG 2.9 R1.0 System Management Bus specification
  - PICMG 2.10 R1.0 Keying specification
- Versions: 3 U 32-bit and 64-bit, 6 HE 64-bit, with system slot left
- V(I/O) adjustable to +3.3 V or +5 V (see photo)
- Backplanes up to 5 slots are 66 MHz capable; 6 to 8 slot backplanes are set for 33 MHz operation
- Outer layers act as GND surfaces
- Outstanding high-frequency noise suppression and very high MTBF values due to ceramic capacitors
- Multiple backplanes can be placed together without loss of slots
- Digital GND can be connected to/isolated from chassis-GND by means of screws
- Infeed of supply voltages via powerbugs (ring tag M4), FASTONs
- Utility plug for status signals (SMCQ)
- Intelligent platform management bus (IPMB) connector to PICMG 2.9

Delivery comprises

Item	Qty	Description
1	1	CompactPCI backplane
2	1	Set of M4x6 bolts, with lock washer; for power connection

Note

- 4 to 7 slot backplanes can be used as primary backplane with bridge (bridge for system slot left available on request)
- Types marked with an asterisk * are available on request

Order Information

Number of slots	Width mm	3 U, 32-bit, CompactPCI backplane 3.3 V V(I/O) Part no.	3 U, 32-bit, CompactPCI backplane 5 V V(I/O) Part no.	3 U, 64-bit, CompactPCI backplane 3.3 V V(I/O) Part no.	3 U, 64-bit, CompactPCI backplane 5 V V(I/O) Part no.	6 U, 64-bit, CompactPCI backplane 3.3 V V(I/O) Part no.	6 U, 64-bit, CompactPCI backplane 5 V V(I/O) Part no.
1	19.3	23006-331	**23006-811**	23006-331	**23006-811**	**–***	**–***
2	39.6	**–***	**–***	23006-422	**23006-732**	**–***	**–***
3	39.6	**–***	**–***	23006-423	**23006-733**	23006-443	23006-763
4	80.3	**–***	**–***	23006-424	**23006-734**	23006-444	**23006-764**
5	100.6	23006-405	23006-715	**–***	**–***	23006-445	**23006-765**
6	121.0	23006-406	23006-716	–	–	**–***	**–***
8	161.6	23006-408	23006-718	23006-428	**23006-738**	23006-448	**23006-768**

Accessories	
Kit to convert V I/O to 3.3 V 8 coding tabs, yellow, coding key, PU 1 kit	**21101-658**
Utility cable SMCQ with flat ribbon cable, length 350 mm,2 × 12-pin female connector, 1 piece	**23204-115**
Utility cable SMCQ with flat ribbon cable, length 600 mm,2 × 12-pin female connector, 1 piece	**23204-116**
Termination adaptor, 64-bit bus for 8 slot CompactPCI backplane, 1 piece	**23006-931**
SM bus/IPMB cable 4 individual wires with SMB plug to open end, length 750 mm, 1 piece	**23204-113**
Screws, washers for backplane mounting	**Page 10.30**

Backplanes – CompactPCI

CompactPCI, packaging switching and H.110 backplane

12405002

Photo shows 23006-797, 9 U

ServicePLUS see page 10.31

- In accordance with
  - PICMG 2.0 R3.0 CompactPCI Core specification
  - PICMG 2.1 R2.0 Hot Swap specification
  - PICMG 2.9 R1.0 System Management Bus specification
  - PICMG 2.10 R1.0 Keying specification
  - PICMG 2.5 Computer Telephony specification (H.110)
  - PICMG 2.16 CompactPCI Packet Switching Backplanes
  - PICMG 2.11 CompactPCI Power Interface specification
- Various versions
  - CompactPCI, Packet Switching, H.110
  - Backplanes for horizontal installation and backplanes for horizontal installation including slots for plug-in power supply (P47)
- V(I/O) can be set to +3.3 V or +5 V
- Backplanes up to 5 slots are 66 MHz capable, 6 to 8 slot backplanes are set for 33 MHz operation
- Outer layers act as GND surfaces
- Outstanding high frequency noise suppression and very high MTBF values due to ceramic capacitors
- Digital GND can be connected to/isolated from chassis GND by means of screws
- Utility plug for status signals
- Intelligent platform management bus (IPMB) connector to PICMG 2.9

Delivery comprises

Item	Qty	Description
1	1	CompactPCI backplane
2	1	Set of M4x6 bolts, with lock washer; for power connection

Note

- Types marked with an asterisk * are available on request

Order Information

Number of slots	CompactPCI backplanes	Power connector	Data connection	Part no.
2	System slot left, for horizontal mounting	ATX (male) connector	64-bit CompactPCI bus	**23006-792**
2	System slot left, for horizontal mounting	Mini-fit 10-pin	64-bit CompactPCI bus	23006-793
2	System slot left, for horizontal mounting	1 x P47	64-bit CompactPCI bus	**23006-794**
4	System slot left, for horizontal mounting	Mini-fit 24-pin	64-bit CompactPCI bus	23006-799
4	System slot left, for horizontal mounting	2 x P47	64-bit CompactPCI bus	23006-795
6	System slot left, for horizontal mounting	Mini-fit 24 pin	64-bit CompactPCI bus	23006-798
6	System slot left, for horizontal mounting	2 x P47 (optional third connector)	64-bit CompactPCI bus	**23006-796**
8	System slot left, for horizontal mounting	2 x P47 (optional third and fourth connectors)	64-bit CompactPCI bus	**23006-797**
8	System slot left, for horizontal mounting	2 x P47 (optional third and fourth connectors)	64-bit CompactPCI bus, H.110 bus, PSB	**23006-611**
8	System slot right, for 6 U CompactPCI system, power input without loss of slot space	Powerbugs	64-bit CompactPCI bus, H.110 bus	**23006-601**

Backplanes – CompactPCI

CompactPCI bridges

12402002

Photo shows 32-bit and 64-bit bridges

ServicePLUS see page 8.112

Open Modular Computing Specifications

- In accordance with
  - PICMG 2.6 CompactPCI Bridging Specification
  - PCI 2.1 PCI Local Bus Specification, Rev. 2.1
- Bridge mounted on rear of backplane, hence no loss of slots
- Very compact and low bridge shape, no interference with rear transition boards
- Schroff CompactPCI backplanes with system slot right are used as primary backplane
- The 32-bit bridge is 33 MHz capable and the 64-bit bridge is 33/66 MHz capable
- Bridges are designed for primary backplanes with system slot right; bridges for system slot left available on request
- A summary of possible backplane/bridge combinations can be found on the Schroff website

Delivery comprises

Item	Qty	Description
1	1	Bridge

Order Information

Description	Part no.
CompactPCI bridge, 32 bit, 33 MHz, for system slot right	23006-920

Note

- 32-bit system slot left on request
- 64-bit system slot left on request

Backplanes – CompactPCI

CompactPCI secondary backplanes, system slot to right

12401021

Photo shows primary and secondary backplane with inserted bridge and fitted rear transition board

ServicePLUS see page 8.112

Open Modular Computing Specifications

- In accordance with
  - PICMG 2.0 R3.0 CompactPCI Core Specification
  - PICMG 2.1 R2.0 Hot-swap Specification
  - PICMG 2.9 R1.0 System Management Bus Specification
    PICMG 2.10 R1.0 Keying Specification
- Secondary backplane for use behind the bridge
- A summary of possible backplane/bridge combinations can be found on the Schroff website
- Secondary backplanes can also be used as tertiary backplanes; change of geographical address see user manual

Delivery comprises

Item	Qty	Description
1	1	CompactPCI backplane
2	1	Kit screws M4 x 6, with lock washers, for power connection

Order Information

Number of slots	Height U	Description	Part no.
4	3	32-bit	**23006-824**
7	3	32-bit	**23006-827**
Accessories			
Screws, washers for backplane mounting			**Page 10.30**

Note

- Other configurations available on request or via www.schroff.co.uk/configuration

Backplanes – PXI

PXI backplanes

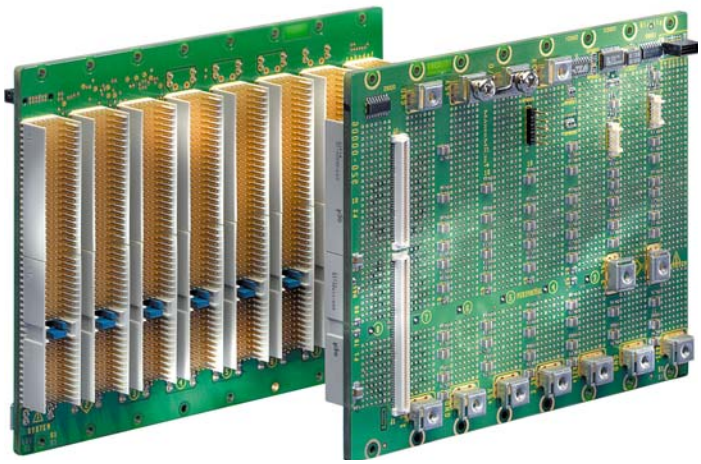

Photo shows 23006-578

ServicePLUS see page 8.112

Open Modular Computing Specifications

- In accordance with
  - PXI Specification R 2.0
  - PICMG 2.0 R3.0 CompactPCI Core Specification
  - PICMG 2.1 R2.0 Hot-swap Specification
  - PICMG 2.9 R1.0 System Management Bus Specification
  - PICMG 2.10 R1.0 Keying Specification
- 64-bit CompactPCI bus and PXI bus on the P2 plane
- Clock generated on the backplane; feeding in an external clock is possible, the backplane switches automatically between the two clocks
- Backplanes with up to 5 slots are capable of 66 MHz, 6 to 8 slot backplanes are set to 33 MHz operation
- Outstanding high-frequency noise suppression and very high MTBF values due to ceramic capacitors
- Utility connector for status signals
- Intelligent platform management bus (IPMB) connector to PICMG 2.9

Delivery comprises

Item	Qty	Description
1	1	PXI backplane
2	1	Kit screws M4 x 6, with lock washer, for power connection

Order Information

Number of slots	System slot		5 V V(I/O) Part no.
5	left	primary	**23006-575**
7	left	primary	**23006-577**
8	left	primary	**23006-578**
4	left	tertiary	**23006-594**
Accessories			
Screws, washers for backplane mounting			**Page 10.30**

Note

- Other configurations available on request or via www.schroff.co.uk/configuration

Backplanes – VPX

VPX backplane, 3 U

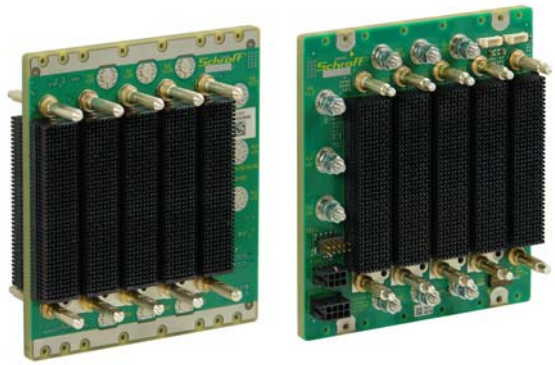

10513002

VPX backplane, 3 U, 5 slot, with rear I/O

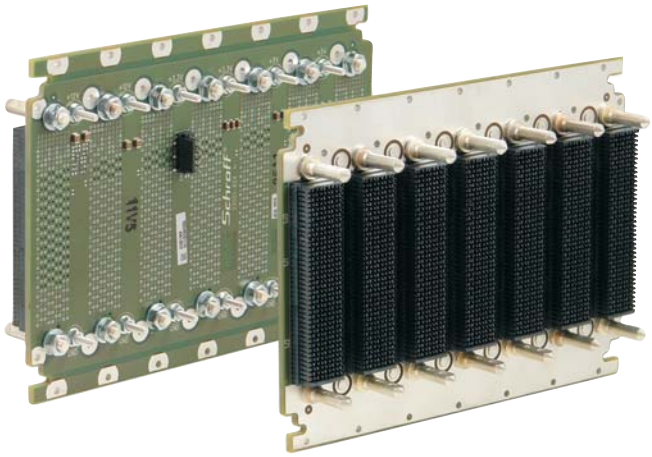

10512002

VPX backplane, 3 U, 7 slot, without rear I/O

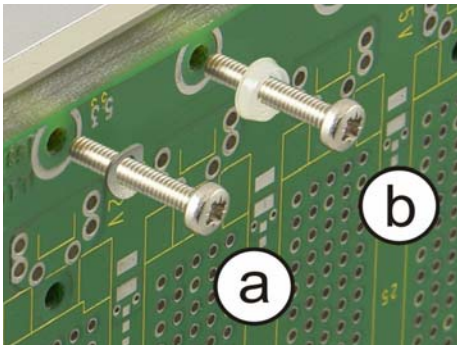

10508004

Backplane mounting: a: conductive, b: isolated

ServicePLUS see page 10.31

- In accordance with:
  - VITA 46.0 VPX base standard
  - VITA 46.3 Serial RapidIO on VPX
  - VITA 46.4 PCI Express on VPX Fabric Connector
  - VITA 46.7 Ethernet on VPX Fabric Connector
  - VITA 46.11 System Management on VPX
  - Version with rear I/O: VITA 46.10 Rear Transition Module for VPX
- JTAG connections
- 3 U, 5 slot, 0.8" slot pitch, full mesh topology to VITA 46.21 distributed switching on VPX rule 4 – 5 with additional slot for power supply
- 3 U, 7 slot, conforms additionally to VITA 65 OpenVPX
  - 6 payload slots, 1 switch slot with 1.0" slot pitch, single star topology conforming to BKP3-CEN07-15.2.3-3
  - Switch slot to SLT3-SWH-6F6U-14.4.1
  - Payload slots to SLT3-PAY-2F2U-14.2.3
- M4 power studs for power supply, max. 22 A per slot for each voltage
- Lockable aux utility and sense connectors
- DIP switch for system slot settings

Order Information

Description	Width mm	Slot pitch	Backplane type	Part no.
Open VPX backplane, 3 U, 7 slot, without rear I/O	121.9	1,0"	Single star	23001-814
Open VPX backplane, 3 U, 7 slot, with rear I/O	176.0	1,0"	Single star	23001-815
VPX backplane, 3 U, 5 slot, without rear I/O	121.9	0,8"	Full Mesh	23001-812
VPX backplane, 3 U, 5 slot, with rear I/O	176.0	0,8"	Full Mesh	23001-813
Accessories				
Screws, washers for backplane mounting				**Page 10.30**

Note

- Backplane to VITA 46.10; rear transition modules on request

Backplanes – VMEbus

Keying and alignment for VPX backplanes

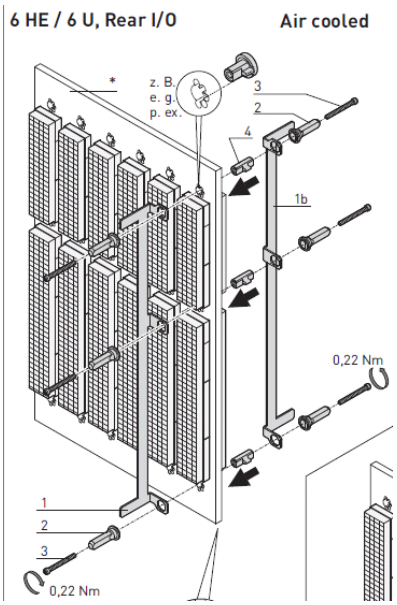

12402004

- Conforms to VITA 46.0
- Keying and alignment for VPX backplane slots with slot spacings 0.8, 0.85 or 1"
- Different versions for air-cooled and conduction-cooled systems
- Air-cooled systems additionally contain stiffening beads that also prevent incorrect insertion of a VPX board (as per VITA 46.0 section 7.9)
- Applications for versions with and without rear I/O
- For board thicknesses 3.6 ... 5.5 mm and 5.5... 7.5 mm
- Simple to fit into the fixing holes provided on every VPX backplane
- One packaging unit contains all components to completely populate 10 slots

Delivery includes

Item	Qty	Description
1	10	Keying and alignment for one VPX slot

Order Information

Height U	Description	Type	Board thickness mm	Part no.
3	Air-cooled	Without Rear I/O	3.6 ... 5.5	20836-550
3	Air-cooled	Without Rear I/O	5.5 ... 7.5	20836-551
3	Air-cooled	With rear I/O	3.6 ... 5.5	20836-552
3	Air-cooled	With rear I/O	5.5 ... 7.5	20836-553
3	Conduction cooled	Without Rear I/O	3.6 ... 5.5	20836-558
3	Conduction cooled	Without Rear I/O	5.5 ... 7.5	20836-559
3	Conduction cooled	With rear I/O	3.6 ... 5.5	20836-560
3	Conduction cooled	With rear I/O	5.5 ... 7.5	20836-561
6	Air-cooled	Without Rear I/O	3.6 ... 5.5	20836-554
6	Air-cooled	Without Rear I/O	5.5 ... 7.5	20836-555
6	Air-cooled	With rear I/O	3.6 ... 5.5	20836-556
6	Air-cooled	With rear I/O	5.5 ... 7.5	20836-557
6	Conduction cooled	Without Rear I/O	3.6 ... 5.5	20836-562
6	Conduction cooled	Without Rear I/O	5.5 ... 7.5	20836-563
6	Conduction cooled	With rear I/O	3.6 ... 5.5	20836-564
6	Conduction cooled	With rear I/O	5.5 ... 7.5	20836-565

MEMBER VITA Open Standards, Open Markets

ServicePLUS see page 8.112

Backplanes – VME64 extension

Monolithic VME64x backplanes (6 U)

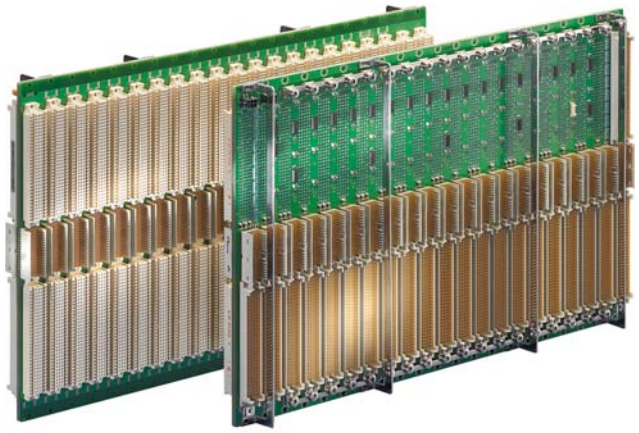

10502001

Photo shows 23001-551

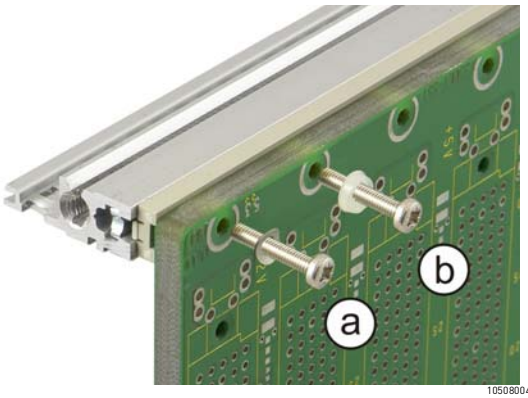

10508004

Backplane mounting: a: conductive, b: isolated

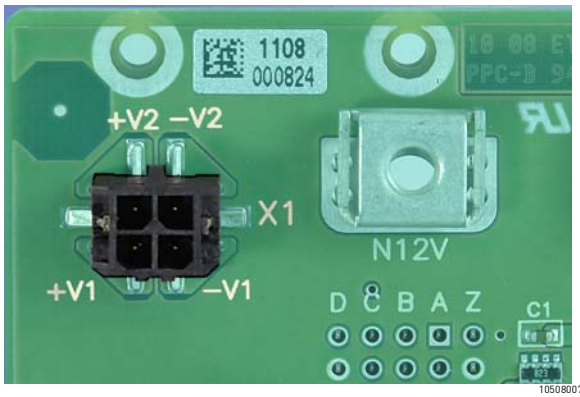

10508007

Connector for additional voltages V1/V2

ServicePLUS see page 10.31

- In accordance with:
  ANSI/VITA 1-1994 VME64 Standard
  ANSI/VITA 1.1-1997 VME64 Extension Standard
  ANSI/VITA 1.5-2003 VME2eSST Specification
  ANSI/VITA 1.7-2003 Increased Current Level
  ANSI/VITA 38 System Management on VME
- Monolithic backplane, 6 U with J1 and J2 plane
- Termination passive
- Electronic automatic daisy chain (EDC)
- Outstanding high-frequency noise suppression and very high MTBF values due to ceramic capacitors
- Connection or isolation between the digital GND and chassis GND can be effected via the screw fittings (see photo)
- Supply voltages can be applied via powerbugs (ring tag M4) or FASTON
- Utility connector for status signals
- System management bus (SMB) connector in accordance with VITA38
- Connector for additional voltages V1/V2 (see photo)

Delivery comprises

Item	Qty	Description
1	1	VME64x backplane
2	1	Kit screws M4 × 6, with lock washer; for power connection

Order Information

Number of slots	Width	Height	Without P0	With P0
	mm	U	Part no.	Part no.
2	39.1	6	**23001-502**	23001-532
3	59.5	6	**23001-503**	23001-533
4	79.8	6	**23001-504**	23001-534
5	100.2	6	**23001-505**	23001-535
6	120.5	6	**23001-506**	23001-536
7	140.8	6	**23001-507**	23001-537
8	161.1	6	**23001-508**	23001-538
10	201.8	6	**23001-510**	23001-540
11	222.0	6	**23001-511**	23001-541
12	242.4	6	**23001-512**	23001-542
15	303.4	6	**23001-515**	23001-545
16	323.7	6	**23001-516**	23001-546
20	405.0	6	**23001-520**	23001-550
21	425.3	6	**23001-521**	23001-551

Accessories	
SM bus/IPMB cable 4 individual wires with SMB plug to open end, length 750 mm, 1 piece	**23204-113**
Utility cable SMCQ with flat ribbon cable, length 350 mm,2 × 12-pin female connector, 1 piece	**23204-115**
Utility cable SMCQ with flat ribbon cable, length 600 mm,2 × 12-pin female connector, 1 piece	**23204-116**
Screws, washers for backplane mounting	**Page 10.30**

Backplanes – VXS

VXS

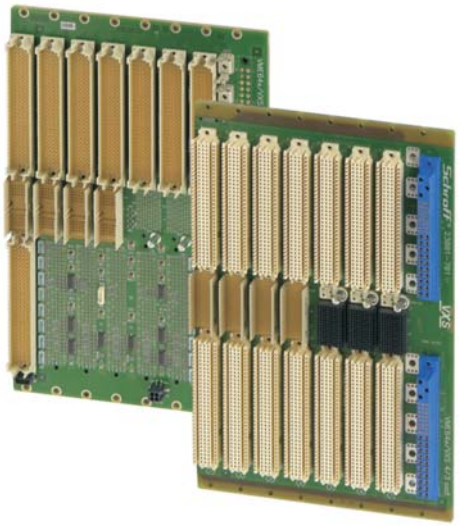

10506004

Photo shows 23001-701

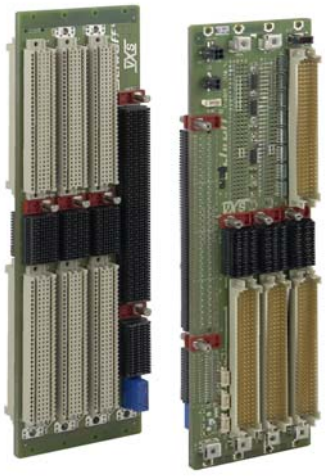

10508002

Photo shows 23001-704

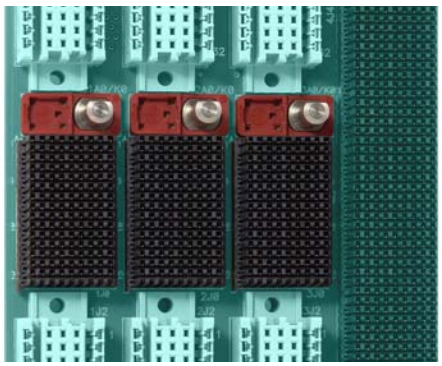

10508009

High-speed connector with keying and alignment pin

ServicePLUS see page 10.31

- In accordance with
  ANSI/VITA 41 VXS VMEbus Switched Serial Standard
  ANSI/VITA 1-1994 VME64 Standard
  ANSI/VITA 1.1-1997 VME64 Extension Standard
  ANSI/VITA 1.5-2003 VME2eSST Specification
  ANSI/VITA 1.7-2003 Increased Current Level
  ANSI/VITA 38 System Management on VME
- Parallel VMEbus on J1 and J2, serial data connections on P0
- MultiGig RT2 connector on P0 position for data transfer rates up to 10 Gbps per differential pair
- Dual star, star and ring topologies
- Keying and alignment pins to avoid mechanical and electrical damage
- Outstanding high-frequency noise suppression and very high MTBF values due to ceramic capacitors
- Supply voltages can be applied via powerbugs (ring tag M4), FASTONs or P47 connectors
- Utility connector for status signals
- System management bus (SMB) connector in accordance with VITA38
- Connector for additional voltages V1/V2

Delivery comprises

Item	Qty	Description
1	1	VXS backplane
2	1	Set of M4x6 bolts, with lock washer; for power connection

Order Information

Number of slots	Width mm	Height U	Description	Part no.
4	80.3	6	1 VXS switch slot and 3 VXS payload slots	23001-704
7	151.4	6	4 VME64x slots, 3 VXS payload slots, ring connected, 1 slot for 2 x 3 U PSUs, without VXS rear I/O	23001-701
12	242.0	6	2 VXS switch slots and 10 VXS payload slots	23001-712
20	405.4	6	2 VXS switch slots and 18 VXS payload slots	23001-720
Accessories				
SM bus/IPMB cable 4 individual wires with SMB plug to open end, length 750 mm, 1 piece				23204-113
Utility cable SMCQ with flat ribbon cable, length 350 mm,2 × 12-pin female connector, 1 piece				23204-115
Utility cable SMCQ with flat ribbon cable, length 600 mm,2 × 12-pin female connector, 1 piece				23204-116
Keying and alignment pin for VXS Payload slot with RTM, PU 10 pieces				20817-900
Keying and alignment pin for VXS Payload slot without RTM, PU 10 pieces				20817-969
Keying and alignment pin for VXS Switch slots, PU 10 pieces				20817-970
Screws, washers for backplane mounting				Page 10.30

Backplanes – VMEbus

Monolithic J1/J2 backplane (6 U)

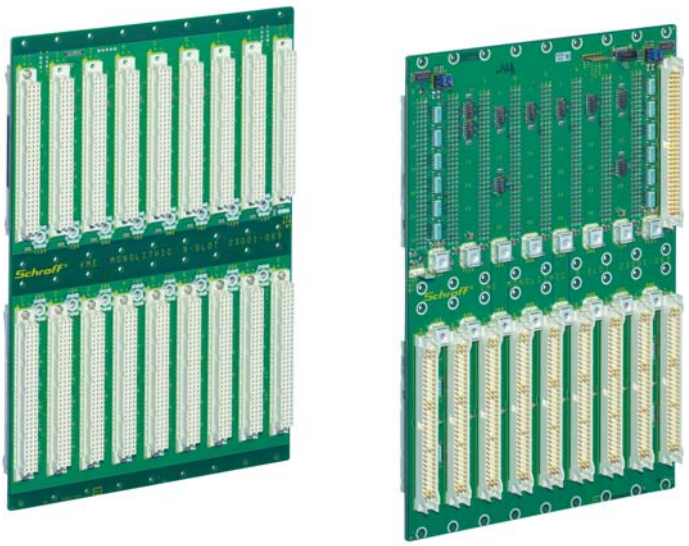

10506003

Photo shows 23001-069

- In accordance with ANSI/VITA 1-1994 VME64 standard
- Monolithic backplane, 6 U with J1 and J2 plane
- Active/passive termination switchable via jumpers; passive termination preset (see photo)
- Electronic automatic daisy chain (EDC)
- Outstanding high-frequency noise suppression and very high MTBF values due to ceramic capacitors
- Linking/separation of digital and chassis GNDs by means of a screw connection (see photo)
- Supply voltages provided via power bugs (ring tag M4) or FASTON
- Two utility connectors for status signals, two different configurations (see photo)

Delivery comprises

Item	Qty	Description
1	1	VME monolithic J1/J2 backplane
2	1	Kit screws M4x6, with lock washer, for power connection

Order Information

Number of slots	Width mm	Height U	Utility connector 2	Part no.
3	59.5	6	MicroMatch	**23001-063**
4	79.8	6	MicroMatch	**23001-064**
5	100.2	6	MicroMatch	**23001-065**
6	120.5	6	MicroMatch	**23001-066**
7	140.8	6	MicroMatch	**23001-067**
8	161.1	6	MicroMatch	**23001-068**
9	181.4	6	SMCQ	**23001-069**
10	201.8	6	MicroMatch	**23001-070**
12	242.4	6	MicroMatch	23001-072
20	405.0	6	SMCQ	**23001-080**
21	425.3	6	MicroMatch	**23001-081**

Accessories	
Utility cable MicroMatch with single conductors, length 600 mm, 1 piece	**23204-812**
Utility cable MicroMatch with flat ribbon cable, length 600 mm, 1 piece	**23204-811**
Utility cable SMCQ with flat ribbon cable, length 350 mm, 2 × 12-pin female connector, 1 piece	**23204-115**
Utility cable SMCQ with flat ribbon cable, length 600 mm, 2 × 12-pin female connector, 1 piece	**23204-116**
Screws, washers for backplane mounting	**Page 10.30**

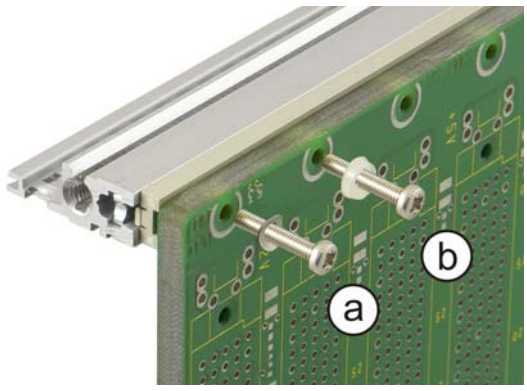

10508004

Backplane mounting: a: conductive, b: isolated

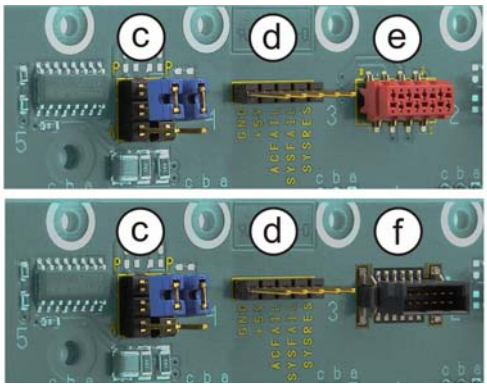

10509001

c: termination switchover active/passive,
d: utility connector 1, e: utility connector 2 MicroMatch, f: utility connector 2 SMCQ

Note

- Other configurations available on request or via www.schroff.co.uk/configuration

ServicePLUS see page 10.31

Backplanes – VMEbus

J1 backplane (3 U)

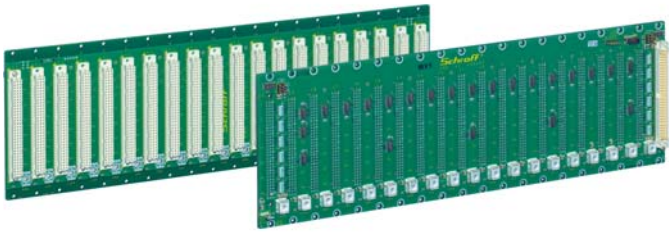

10506001

Photo shows 23001-020

- In accordance with ANSI/VITA 1-1994 VME64 standard
- 3 U with J1 plane
- Active/passive termination switchable via jumpers; passive termination preset (see photo)
- Electronic automatic daisy chain (EDC)
- Outstanding high-frequency noise suppression and very high MTBF values due to ceramic capacitors
- Linking/separation of digital and chassis GNDs by means of a screw connection (see photo)
- Supply voltages provided via power bugs (ring tag M4) or FASTON
- Two utility connectors for status signals, two different configurations (see photo)

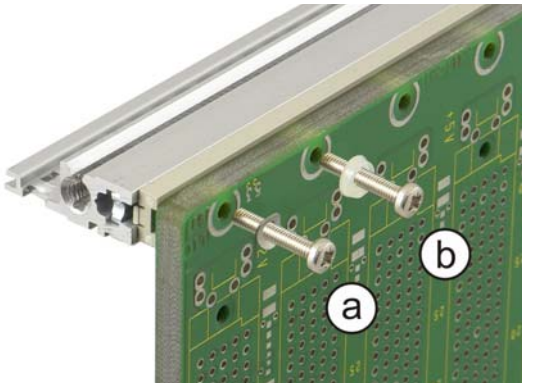

10508004

Backplane mounting: a: conductive, b: isolated

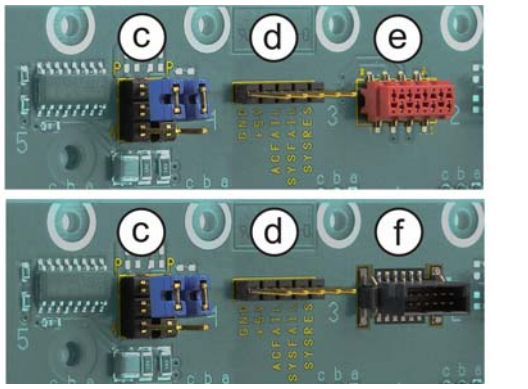

10509001

c: termination switchover active/passive,
d: utility connector 1, e: utility connector 2 MicroMatch, f: utility connector 2 SMCQ

ServicePLUS see page 10.31

Delivery comprises

Item	Qty	Description
1	1	VME J1 backplane
2	1	Kit screws M4x6, with lock washer; for power connection

Order Information

Number of slots	Width mm	Height U	Utility connector 2	Part no.
1	20.2	3	-	**23001-001**
2	39.1	3	MicroMatch	**23001-002**
3	59.7	3	MicroMatch	**23001-003**
4	79.8	3	MicroMatch	**23001-004**
5	100.2	3	MicroMatch	**23001-005**
6	120.5	3	MicroMatch	**23001-006**
7	140.8	3	SMCQ	**23001-007**
8	161.1	3	MicroMatch	**23001-008**
9	181.4	3	MicroMatch	23001-009
10	199.2	3	SMCQ	**23001-010**
12	242.4	3	SMCQ	**23001-012**
15	303.4	3	MicroMatch	**23001-015**
17	341.4	3	MicroMatch	23001-017
18	364.3	3	MicroMatch	23001-018
20	405.0	3	MicroMatch	**23001-020**
21	425.3	3	MicroMatch	**23001-021**
Accessories				
Utility cable MicroMatch with single conductors, length 600 mm, 1 piece				**23204-812**
Utility cable MicroMatch with flat ribbon cable, length 600 mm, 1 piece				**23204-811**
Utility cable SMCQ with flat ribbon cable, length 350 mm,2 × 12-pin female connector, 1 piece				**23204-115**
Utility cable SMCQ with flat ribbon cable, length 600 mm,2 × 12-pin female connector, 1 piece				**23204-116**
Screws, washers for backplane mounting				**Page 10.30**

Backplanes – VMEbus

J2 backplane (3 U)

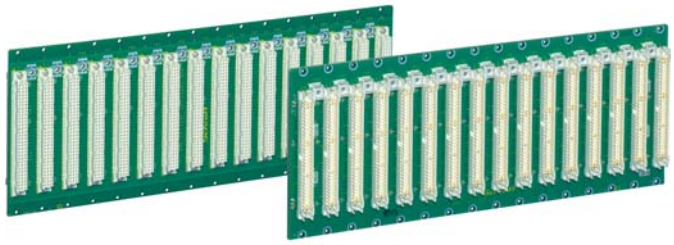

10506002

Photo shows 23001-046

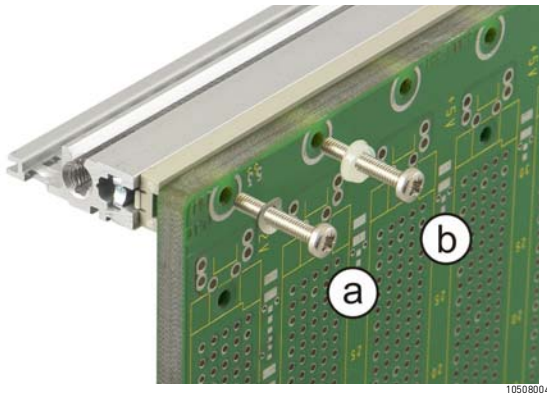

10508004

Backplane mounting: a: conductive, b: isolated

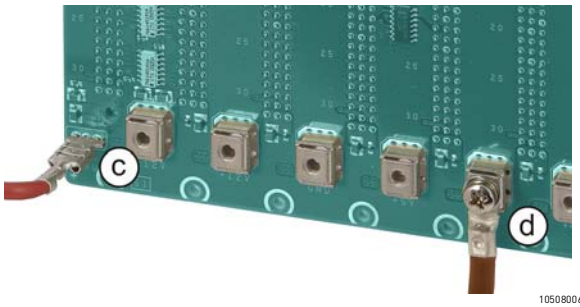

10508006

Supply voltage feed:
c: cable with blade receptacle pushed onto FASTON
d: cable with ring tag screwed to powerbug, with M4 screw and lock washer

- In accordance with ANSI/VITA 1-1994 VME64 standard
- 3 U with J2 plane
- Termination passive
- Outstanding high-frequency noise suppression and very high MTBF values due to ceramic capacitors
- Multiple backplanes can be placed side by side without loss of slot space
- Connection or isolation between the digital GND and chassis GND can be effected via the screw fittings (see photo)
- Supply voltages can be provided via powerbugs (ring tag M4) or FASTONs (see photo)

Delivery comprises

Item	Qty	Description
1	1	VME J2 backplane
2	1	Set of 6 M4 bolts, with lock washer; for power connection

Order Information

Number of slots	Width mm	Height U	Part no.
2	40.4	3	**23001-032**
3	59.7	3	23001-033
4	79.8	3	23001-034
5	100.2	3	**23001-035**
10	199.2	3	23001-040
16	321.3	3	**23001-046**
21	425.3	3	**23001-051**

Accessories

Screws, washers for backplane mounting	**Page 10.30**

ServicePLUS see page 10.31

Backplanes

Power backplane with P47 connector

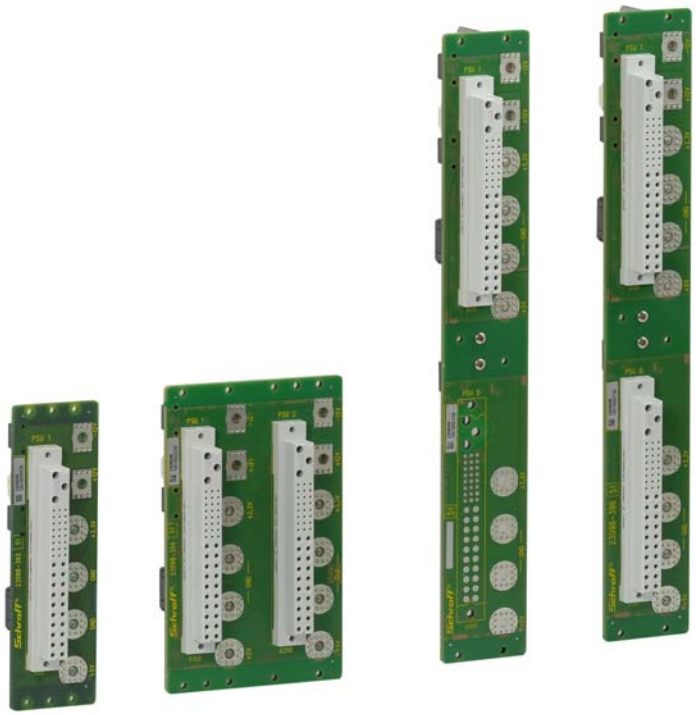

01917001

ServicePLUS see page 10.31

- In accordance with: PICMG 2.11 R1.0 CompactPCI Power Interface specification and PICMG 2.9 R1.0 System Management Bus specification
- Single, parallel or redundant operation possible
- Direct current outlets for high currents with virtually no voltage reduction
- Geographical address adjustable
- Power supply over crimp contacts insertable into the plug, no supply voltage on the backplane
- Power cable available as an accessory
- DC outlets with powerbugs for extremely low drops in voltage

Delivery includes

Item	Qty.	Description
1	1	Power backplane with P47 connector
2	1	Set, combination screw M4 x 6 in accordance with DIN 6900

Order Information

Width HP	Width mm	Number of slots	Power connector	Height U	Part no.
8	39.6	1	1 x P47	3	23098-393
16	80.3	2	2 x P47	3	23098-394
8	39.6	1	1 x P47	6	23098-395
8	39.6	1	2 x P47	6	23098-396
Accessories					
Power cable 3-wire, 500 mm, 1 piece					23204-110
Utility/sense cable Flat ribbon cable, length 350 mm, 2 x 12-pin female connector, 1 piece					**23204-115**
Utility/sense cable Flat ribbon cable, length 600 mm, 2 x 12-pin female connector, 1 piece					**23204-116**
SM bus/IPMB cable 4 individual wires with SMB plug to open end, length 750 mm, 1 piece					**23204-113**
Current-sharing flat ribbon cable, 150 mm, 2 x 4-pin Micro-Match 1 piece					23204-867
Utility cable MicroMatch with single conductors, length 600 mm, 1 piece					**23204-812**
Utility cable MicroMatch with flat ribbon cable, length 600 mm, 1 piece					**23204-811**

Power piggyback

12401002

- Allows connection of pluggable power supplies, e.g. ATX PSUs, to CompactPCI backplanes
- Simply mounts on the PSU screw connections on the rear of Schroff CompactPCI backplanes

Delivery comprises

Item	Qty	Description
1	1	Power piggyback

Order Information

Description	Qty/PU	Part no.
Power piggyback	1	**23098-100**

Backplanes

Universal backplanes

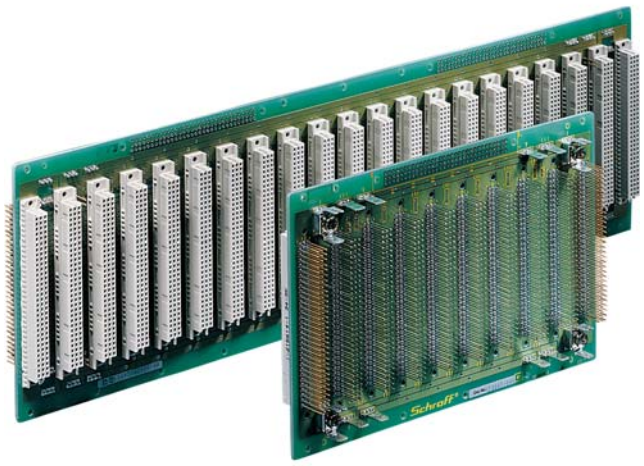

12096003

Universal backplanes with through-connected signal lines, 10 and 21 slot

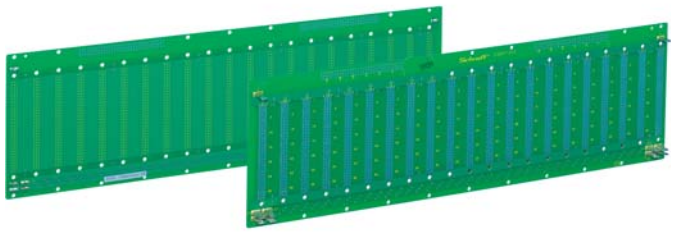

12006001

Universal backplanes without through-connected signal lines, 21 slots

ServicePLUS see page 10.31

With through-connected signal lines

- Power supply at each connector position (row 1 + 32)
- Adaptation fields for power connections on 2-layer backplanes
- Two versions:
  - 60 signal lines, through-connected from connector to connector (C64), row „b“ can be freely wired (2 layers with C96 connector), wire-wrap
  - 90 signal lines, through-connected from connector to connector

Without through-connected signal lines

- Individual wiring of connectors is possible since signal lines are not through-connected
- Power supply at each connector position (row 1 + 32)
- Adaptation fields for connections

Delivery comprises

Item	Qty	Description
1	1	Universal backplane
2	10	Bridges, grid 5.08 mm
3	3	Jumpers
4	1	10-pin header

Order Information

with through-connected signal lines

Number of slots	Slot pitch HP	Width HP	No. of layers	Connector type	No. of signal lines	Part no.
10	4	42	2	C64F	60	**23007-010**
10	4	42	2	C96F	60	23007-040
10	4	42	4	C96F	90	**23007-410**
14	3	42	2	C64F	60	23007-114
21	4	84	2	C64F	60	**23007-021**
21	4	84	2	C96F	60	23007-051
21	4	84	2	–	60	23007-081
21	4	84	4	C96F	90	**23007-421**
28	3	84	2	C64F	60	23007-128
28	3	84	2	C96F	60	23007-158
28	3	84	2	–	60	**23007-188**

Connector "-": not equipped, 96 solder points

Order Information

without through-connected signal lines

Number of slots	Slot pitch HP	Width HP	No. of layers	Part no.
21	4	84	2	23007-222
Accessories				
Screws, washers for backplane mounting				Page 10.30

Test adaptors

Test adaptors, type B

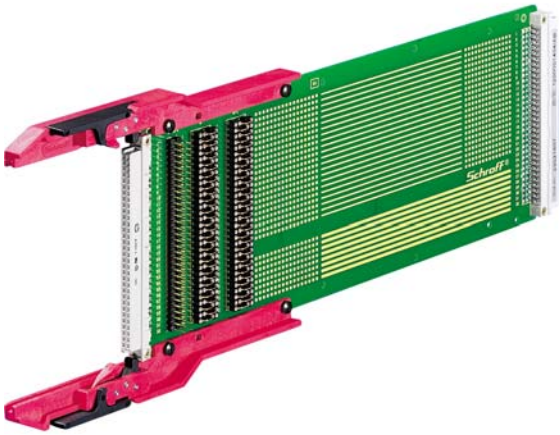

11100018

Photo shows 23021-607

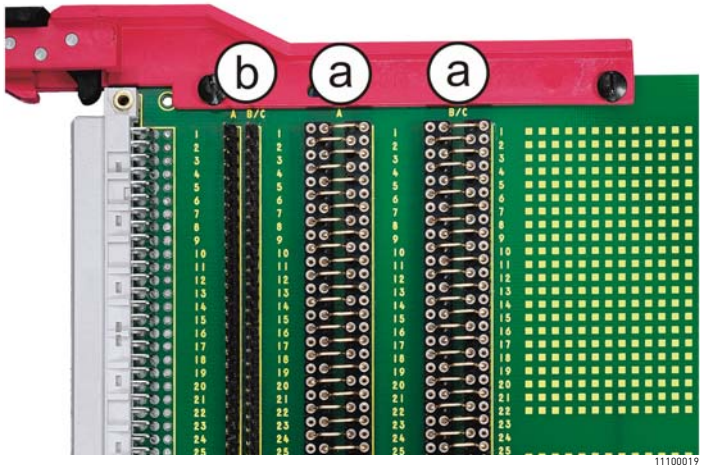

11100019

a: Measuring field for current and voltage measurement
b: Header for wire wrap

ServicePLUS see page 10.31

- For DIN 41612 connectors, type B
- Measuring field for current and voltage measurement (U/I), (a)
- Header with pin diameter 0.6 mm for wire wrap (b)
- Outer pin rows (pin 1a, c and pin 32a, c) with wider tracks for power supply (2 A per track)

Delivery comprises

Item	Qty	Description
1	1	Test adaptor with fitted guide rails and equipped test bridges
2	10	Replacement test bridges

Order Information

Connector type	Height	For board depth	Backplane type	Measuring field for	Part no.
	U	mm			
B64	3	160	1L	U / I	23021-607
B64	3	220	1L	U / I	23021-651

Note

- Detailed dimensions and test adaptor types see page 10.29
- 6/9 U test adaptors see page 10.27

Test adaptors

Test adaptors, type C

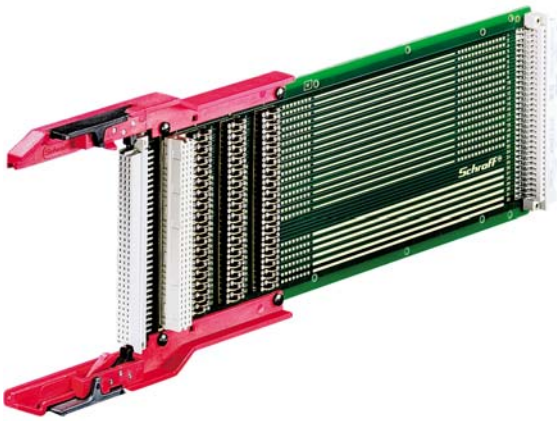

11100003

Photo shows 23021-609

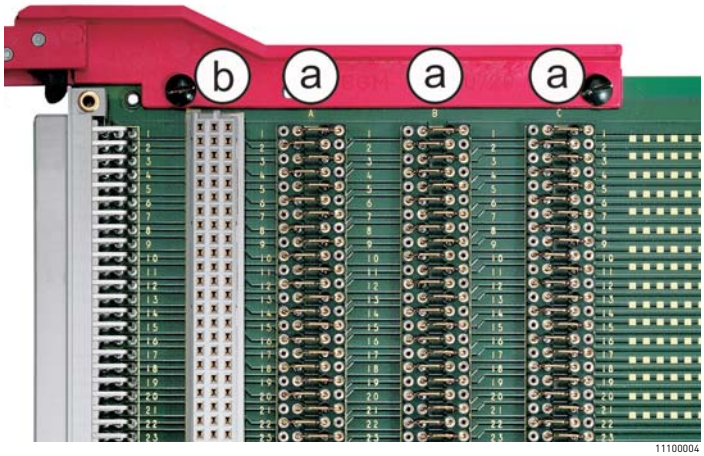

11100004

a: Measuring field for current and voltage measurement
b: Connector position for a second test object

ServicePLUS see page 10.31

- For DIN 41612 connectors, type C
- 2 different measuring fields:
  - current and voltage measurement (U/I): pluggable test bridges
  - voltage measurement (U): soldered test bridges
- Connector type C64: Header with pin diameter 0.6 mm for wire wrap
- Connector type C96: Slot for second test unit or terminator board (b)
- Outer pin rows (C96: pin 1a, b, c and pin 32a, b, c; C64: pin 1a, c and pin 32a, c) with wider tracks for power supply (2 A per track)

Delivery comprises

Item	Qty	Description
1	1	Test adaptor with fitted guide rails and equipped test bridges
2	10	Replacement test bridges

Order Information

Connector type	Height U	For board depth mm	Backplane type	Measuring field for	Part no.
C 64	3	160	1L	U / I	23021-608
C 64	3	220	2L	U / I	23021-652
C 64	6	160	1L	U / I	23022-601
C 96	3	160	2L	U	**23021-603**
C 96	3	160	2L	U / I	23021-609
C 96	3	160	4L	U / I	23021-610
C 96	3	220	2L	U / I	**23021-653**
C 96	3	220	4L	U / I	**23021-654**
C 96	3	280	2L	U / I	23021-700
C 96	3	280	4L	U / I	23021-701
C 96	3	340	4L	U / I	23021-750
C 96	6	160	2L	U / I	**23022-602**
C 96	6	160	4L	U / I	**23022-603**
C 96	6	220	2L	U / I	**23022-652**
C 96	6	280	2L	U / I	**23022-700**

Note

- Detailed dimensions and test adaptor types see page 10.29
- 6/9 U test adaptors see page 10.27

Test adaptors

Test adaptors, type D

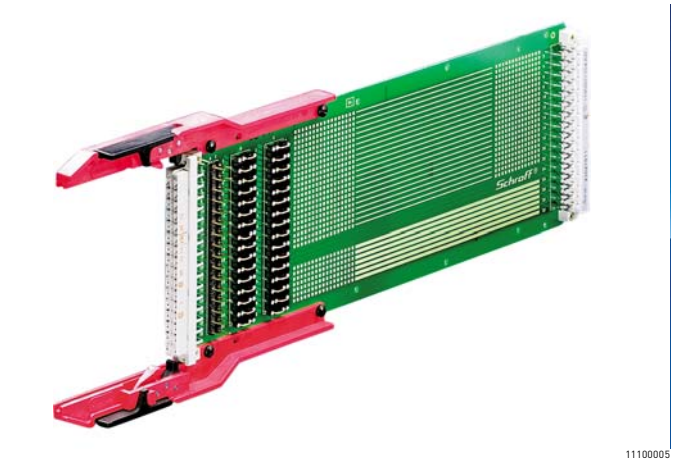

Photo shows 23021-611

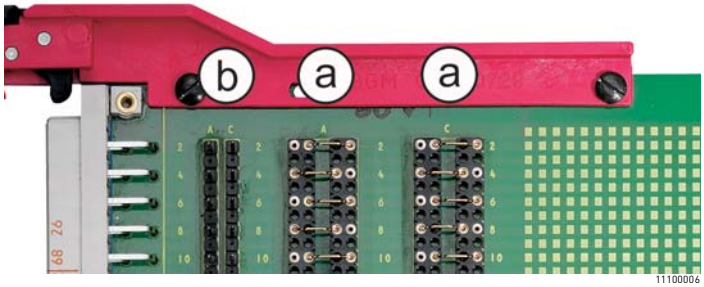

a: Measuring field for current and voltage measurement
b: Header for wire wrap

- For DIN 41612 connectors, type D
- 2 different measuring fields:
  - current and voltage measurement (U/I): pluggable test bridges
  - voltage measurement (U): soldered test bridges
- Header with pin diameter 0.6 mm for wire wrap (b)
- Outer pin rows (pin 1a, c and pin 16a, c) with wider tracks for power supply (2 A per track)

Delivery comprises

Item	Qty	Description
1	1	Test adaptor with fitted guide rails and equipped test bridges
2	10	Replacement test bridges

Order Information

Connector type	Height U	For board depth mm	Backplane type	Measuring field for	Part no.
D32	3	160	1L	U / I	**23021-611**
D32	3	160	1L	U	23021-604
D32	3	220	1L	U / I	23021-655

Note

- Test adaptor type D cannot be used in combination with the adapter of other types
- Detailed dimensions and test adaptor types see page 10.29

Test adaptors, type E

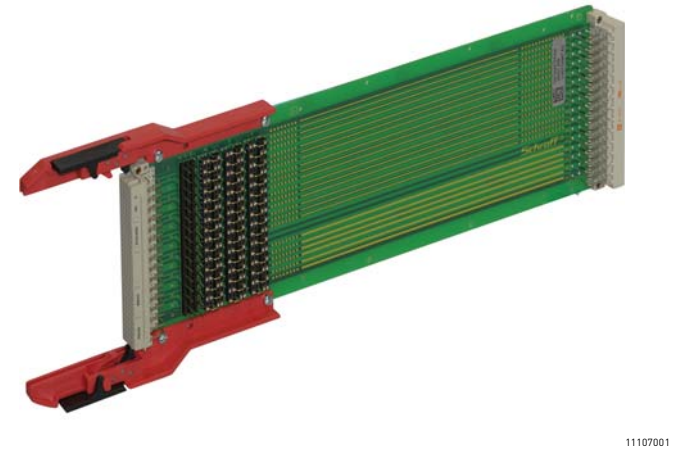

Photo shows 23021-656

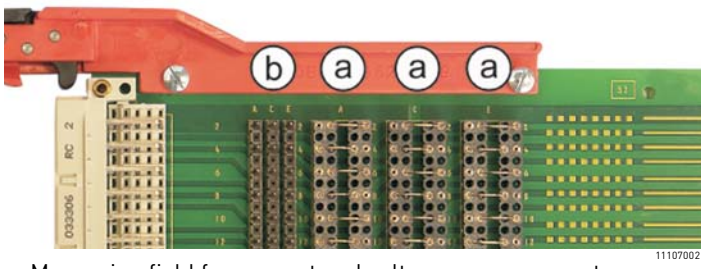

a: Measuring field for current and voltage measurement
b: Header for wire wrap

- For DIN 41612 connectors, type E
- Measuring field for current and voltage measurement (U/I), (a)
- Header with pin diameter 0.6 mm for wire wrap (b)
- Outer pin rows (pin 1a, c, e and pin 31a, c, e) with wider tracks for power supply (2 A per track)

Delivery comprises

Item	Qty	Description
1	1	Test adaptor with fitted guide rails and equipped test bridges
2	10	Replacement test bridges

Order Information

Connector type	Height U	For board depth mm	Backplane type	Measuring field for	Part no.
E48	3	220	2L	U / I	**23021-656**

Note

- Detailed dimensions and test adaptor types see page 10.29
- 6/9 U test adaptors see page 10.27

Test adaptors

Test adaptors, type F

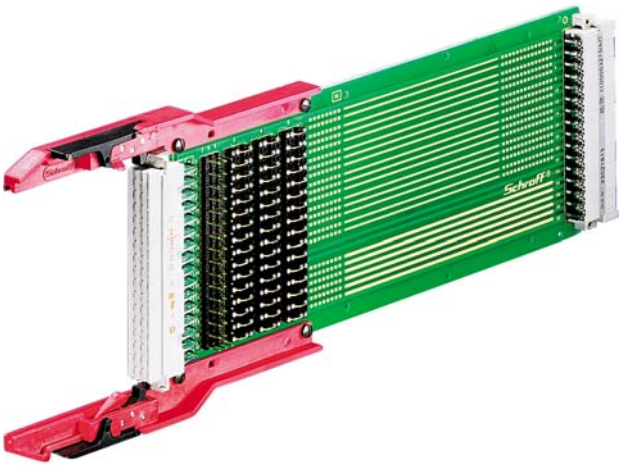

11100008

Photo shows 23021-613

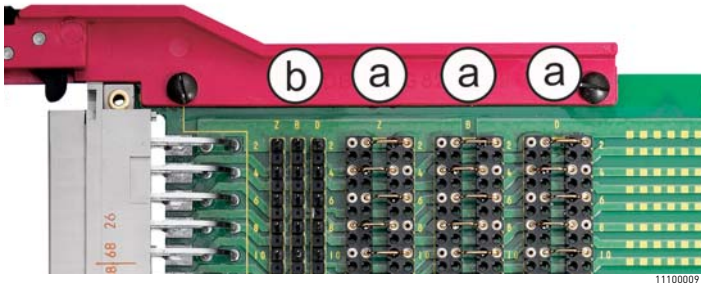

11100009

a: Measuring field for current and voltage measurement
b: Header for wire wrap

- For DIN 41612 connectors, type F
- 2 different measuring fields:
  - current and voltage measurement (U/I): pluggable test bridges
  - voltage measurement (V): soldered test bridges
- Header with pin diameter 0.6 mm for wire wrap (b)
- Outer pin rows (pin 1a, c, e and pin 16a, c, e) with wider tracks for power supply (2 A per track)

Delivery comprises

Item	Qty	Description
1	1	Test adaptor with fitted guide rails and equipped test bridges
2	10	Replacement bridges

Order Information

Connector type	Height U	For board depth mm	Backplane type	Measuring field for	Part no.
F48	3	160	2L	U	23021-605
F48	3	160	2L	U / I	**23021-613**
F48	6	160	2L	U / I	23022-604
F48	3	220	2L	U / I	**23021-657**

Note

- Detailed dimensions and test adaptor types see page 10.29
- Further 6/9 U test adaptors see page 10.27

Test adaptors, type M

11100013

Photo shows 23021-616

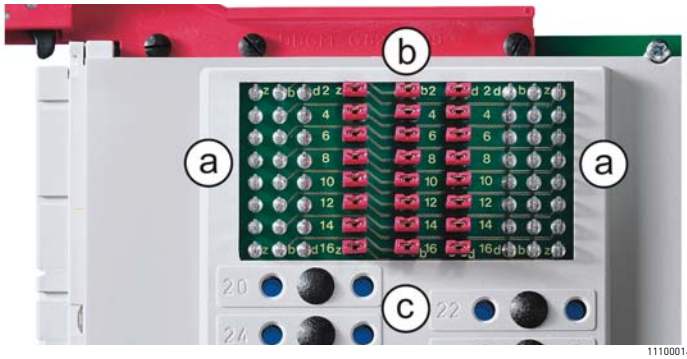

11100014

Test adaptor M (F24/H7), a: Measurement lugs,
b: Measuring pin with jumper, c: Test bridge, diameter 4 mm

- For DIN 41612 connectors, type M
- 2 versions:
  - M (F/H): with high-current contacts (H)
  - M (C/coax): with coaxial connector contact
- Measuring field versions for current and voltage measurement (U/I):
  - M (F/H):
    F: measurement lugs (a) and measurement pins (b) with jumpers
    H: test bridges (c) (diameter 4 mm)
  - M (C/coax):
    C: test bridges pluggable,
    header with pin diameter 0.6 mm for wire wrap

Delivery comprises

Item	Qty	Description
1	1	Test adaptor with fitted guide rails and equipped test bridges
2	10	Replacement test bridges

Order Information

Connector type	Height U	For board depth mm	Backplane type	Measuring field for	Part no.
M (F24/H7)	3	160	2L	U / I	**23021-616**
M (F24/H7)	3	220	2L	U / I	**23021-660**

Note

- Detailed dimensions and test adaptor types see page 10.29

Test adapters

Test adaptors for VMEbus

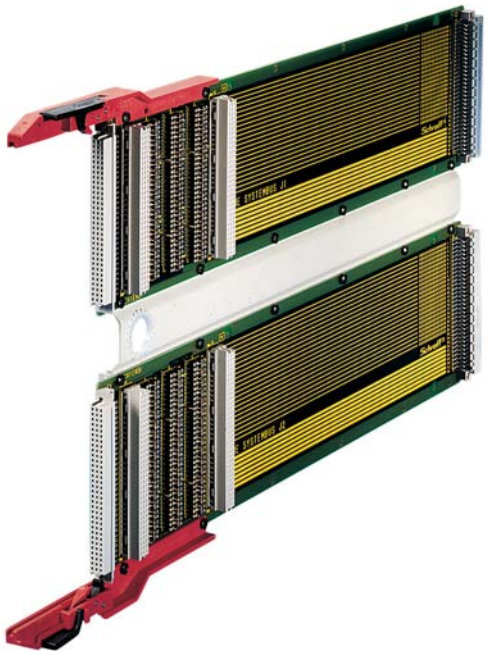

11192004

Photo shows 6 U test adaptor

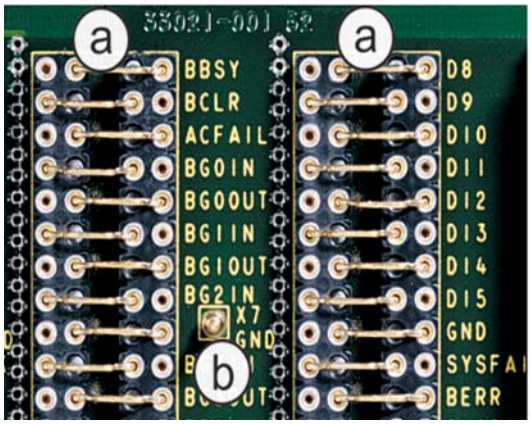

11196001

a: measuring field for current and voltage measurement
b: Measuring pin, e.g. for test prod

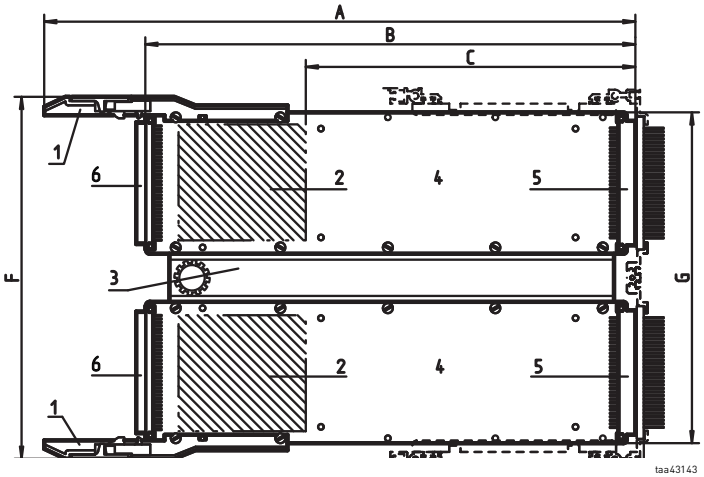

taa43143

Dimensional drawing of test adaptor

- Layout of conductive tracks and layer build-up match the requirements of the VME bus
- Measuring field version for current and voltage measurement (V/I), (a)
- Additional measuring pins, e.g. for the probe tips of an oscilloscope (b)
- 1 pin position for second test object, 1 pin position for terminator board
- Voltage supply lines are designed for 2 A
- 6 U test adaptors consist of two 3 U test adaptors linked via an intermediate adaptor

Delivery comprises

Item	Qty	Description
1	1	Test adaptor with fitted guide rails and equipped test bridges
2	10	Replacement test bridges

Order Information

Height U	For board depth mm	Connector type P1	P2	Part no.
3	160	C96	–	23021-001
3	160	–	C96	23021-100
3	220	C96	–	23021-002
3	220	–	C96	**23021-101**
6	160	C96	C96	23022-002
6	220	C96	C96	23022-004
6	280	C96	C96	23022-010

P1 = system bus, P2 = I/O bus

Note

- 9 U test adaptor see page 10.27

Dimensions table VMEbus test adaptors

Board height	F (mm)	G (mm)
3 U	123.65	100
6 U	257	233.35

For board depth	A (mm)	B (mm)	C (mm)	D (mm)
160 mm	423	350	237	175.24
220 mm	483	410	297	235.24
280 mm	543	470	417	355.24

A = overall length, B = extension

ServicePLUS see page 10.31

Test adapters

6/9 U test adaptors

6 U

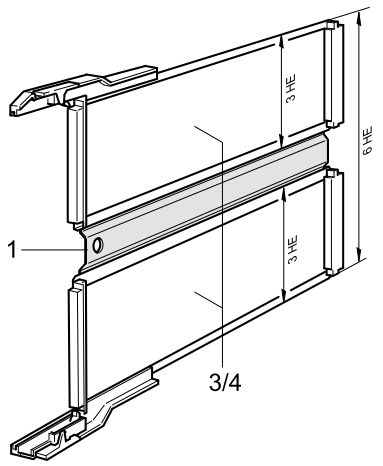

A4-2550

9 U

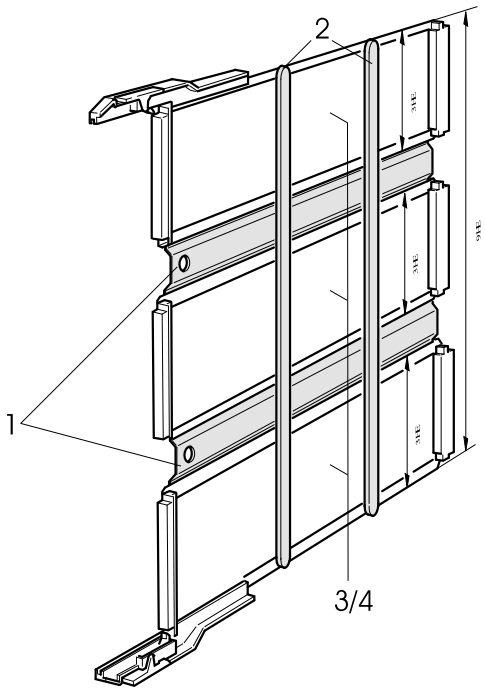

BPTE6567

- Suitable for types B, C, D, E, F
- 6 U test adaptor can be made from:
  - 2 × equal length 3 U test adaptors (3/4)
  - 1 × intermediate adaptor 6 U (1)
    or
  - 1 × 3 U test adaptor (3/4)
  - 1 × bare board (item 2 without connector)
  - 1 × intermediate adaptor 6 U (1)
- 9 U test adaptor can be made from:
  - 3 × equal length 3 U test adaptors (3/4)
  - 2 × intermediate adaptor 9 U (1)
    or
  - 2 × 3 U test adaptors (3/4)
  - 1 × bare board (item 2 without connector)
  - 2 × intermediate adaptor 9 U (1)
    or other combinations
    test adaptor item 4, type x
    bare board: item 3

Delivery comprises (kit)

Item	Qty 6 U	Qty 9 U	Description
1	1	2	Intermediate adaptor, St, 1.5 mm, grey, incl. assembly kit
2	–	2	Board stiffener

Order Information

Description	For board depth mm	For test adaptor depth (dimension B) mm	Part no.
6 U	160	290	**20800-224**
6 U	220	350	**20800-168**
6 U	280	410	**20800-278**
6 U	340	470	**20800-279**
9 U	220	350	**23040-001**
Accessories			
Bare board (item 2) 3 U, 160 mm deep without connector, 1 piece			**23040-006**
Bare board (item 2) 3 U, 220 mm deep without connector, 1 piece			**23040-007**

Note

- Test adaptor type D cannot be combined with other types
- Test adaptor depth (dimension B) of VMEbus test adaptors see page 10.26
- Test adaptor depth (dimension B) at type B, C, D, E, F, see page 10.29

Test adapters

Board guides

11192009

Top: with locking lever, left short, right long;
bottom: without locking lever, left short, right long

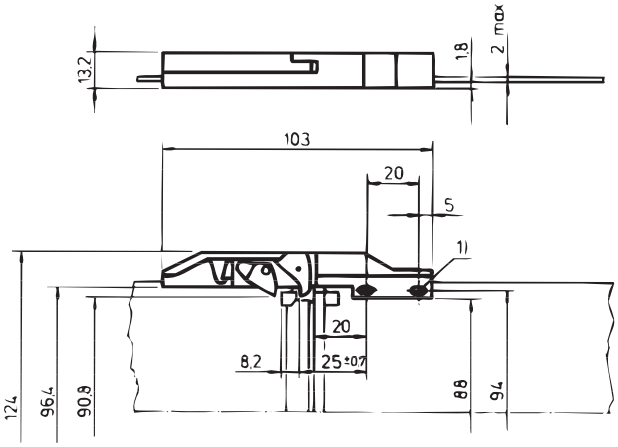

A4-1908

Short board guide

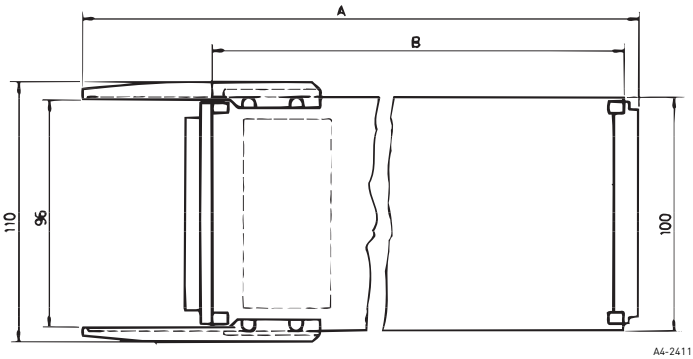

A4-2411

Short board guide without locking lever
A, B, see "Dimensions test adaptors"

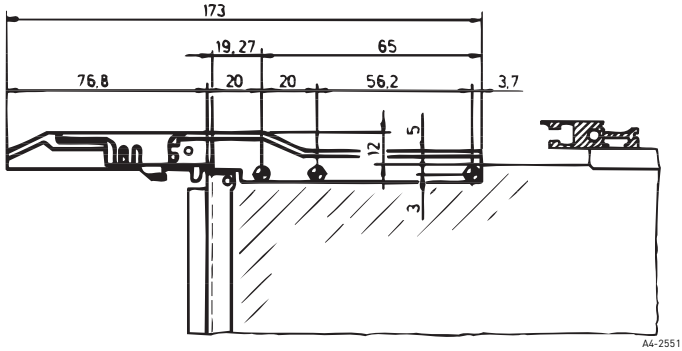

A4-2551

Long board guide without locking lever

- To hold and lock modules that have to be tested (for replacement purposes only, board guides are included in delivery of all test adaptors)
- Versions
  - Short board guide with/without locking lever
  - Long board guide with/without locking lever

Order Information

Description	Qty/PU	Part no.
Type: short, with locking lever	2	60800-834
Type: short, without locking lever	1	60800-032
Type: long, with locking lever	2	20800-212
Type: long, without locking lever	2	20800-213

Test adapters

Types/board versions

Epoxy fibreglass EP-GC02 to DIN 40802 (FR4).
Outlying connections (e.g. pins 1a, b, c and pins 32a, b, c) each have a wider PCB track or large-surface tracks on inner layers – e.g. for shielding, V_{CC}, GND.

Type	
1L	PCB single-sided, laminated (suitable for up to 2 MHz)
2L	PCB, double-sided, laminated and through-connected (suitable for up to approx. 8 MHz)
4L	Multi-layer, 4-layer (suitable for above 8 MHz): Multi-layer technology with large-area inner layers (signal–surface–surface–signal). In the coax version the large-area inner layers can be soldered to the desired pins by means of power links.

Dimensions test adaptors

■ Types B, C, E, F, H and M

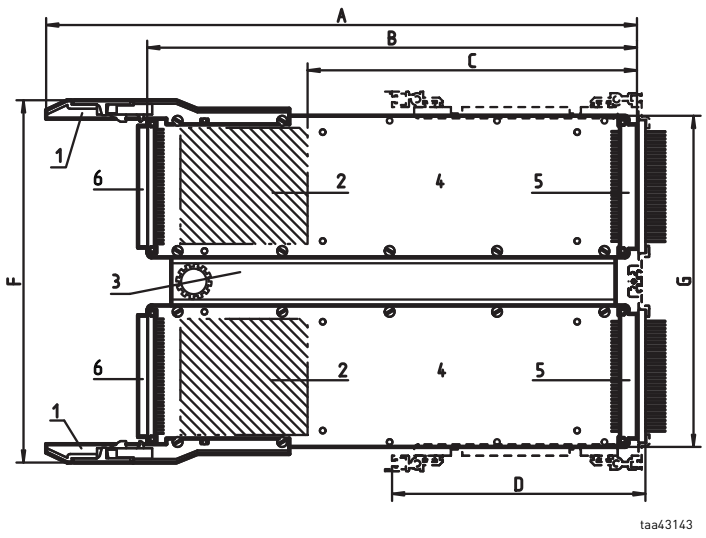

Board height	F mm	G mm
3 U	123.00	100.00
6 U	257.00	233.35

Board depth	A mm	B mm	C mm	D mm
160 mm	363	290	190	175.24
220 mm	423	350	250	235.24
280 mm	483	410	310	355.24
340 mm	543	470	370	415.24

1) Board guide
2) Measuring field
3) Mounting bracket with extraction aid
4) Test adaptor
5) Male connector
6) Female connector

Test adapters

Panhead screws

	Description	Application	Material	Dimension	Qty/PU	Part no.
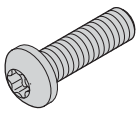 aza45940	Torx panhead screw	For backplane fixing	St, nickel-plated	M2.5 x 12	100	**24560-161**
		For backplane fixing	St, nickel-plated	M2.5 x 14	100	**24560-162**
		For backplane fixing	St, nickel-plated	M2.5 x 16	100	**24560-163**
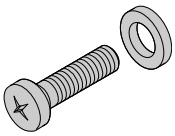 06702051	Screw + securing washer	For backplane fixing	St, nickel-plated	M2.5 x 12	100	**21100-777**

Test adapters – ServicePLUS

configuration — Simple. Fast. For the product you want.

Equipped to customer specification

- Appropriate solutions from our standard range or individual solutions
- Equipping options: e.g.: do not equip unused connectors, VME with ADC or MDC, set CPCI to 3.3 V, ...
- Online configuration enquiry: www.schroff.co.uk/configuration

modification — Small changes. Large impact.

Small design alterations to off-the-shelf products

- Minor modifications to our standard-backplane designs, customized modifications
- Conformal coating

solution — Simple. Fast. From one source.

System integration and custom developments

- Development, simulation and design to customer specification; Production of prototypes, pilot series and production series
- Simulation and testing

academy — Knowledge. Sharing. Partnerships.

Knowledge transfer and partnership

- Test reports, user reports, user manuals for download

Content

Cabinets 1

Wall mounted cases 2

Accessories for cabinets and wall mounted cases . 3

Climate control . 4

Electronics cases 5

Subracks/ 19" chassis 6

Front panels, plug-in units . . . 7

Systems 8

Power supply units 9

Backplanes . . . 10

Connectors, front panel component system 11

Appendix 12

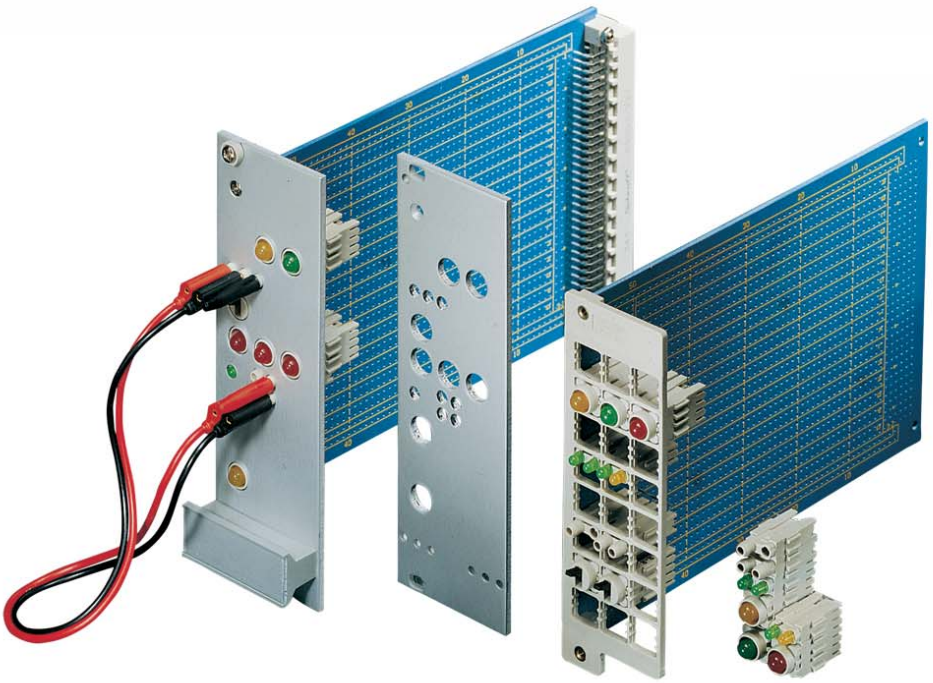

Front element systems

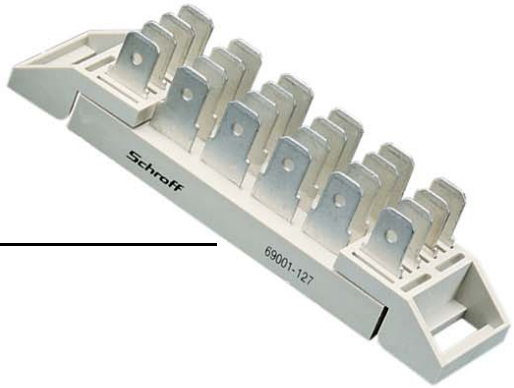

Busbars

05092001 00892005 36103009

Overview 11.0

Connectors/
busbars..... 11.2

Front element
systems..... 11.12

Electrical
components
see
europacPRO
subrack section 6.65

Connectors

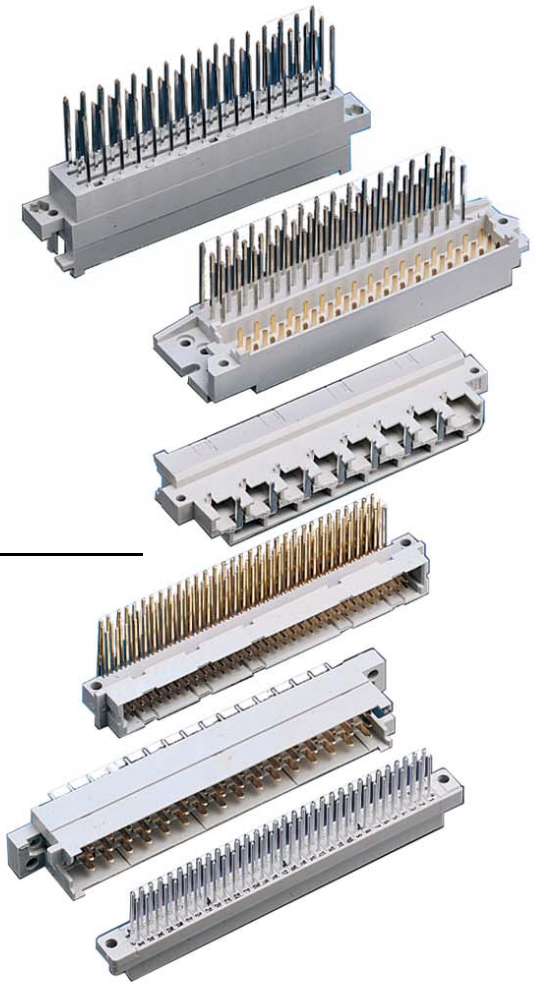

Electrical components

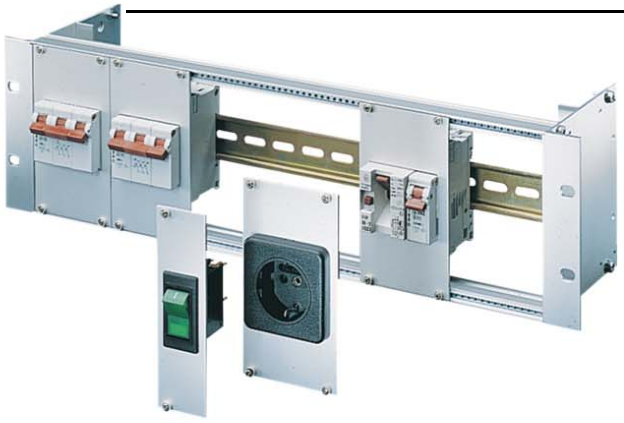

05596002 01494031 36103009

Content

Cabinets 1
Wall mounted cases 2
Accessories for cabinets and wall mounted cases . 3
Climate control . 4
Electronics cases 5
Subracks/ 19" chassis 6
Front panels, plug-in units . . . 7
Systems 8
Power supply units 9
Backplanes . . . 10
Connectors, front panel component system 11
Appendix 12

Connectors, busbars

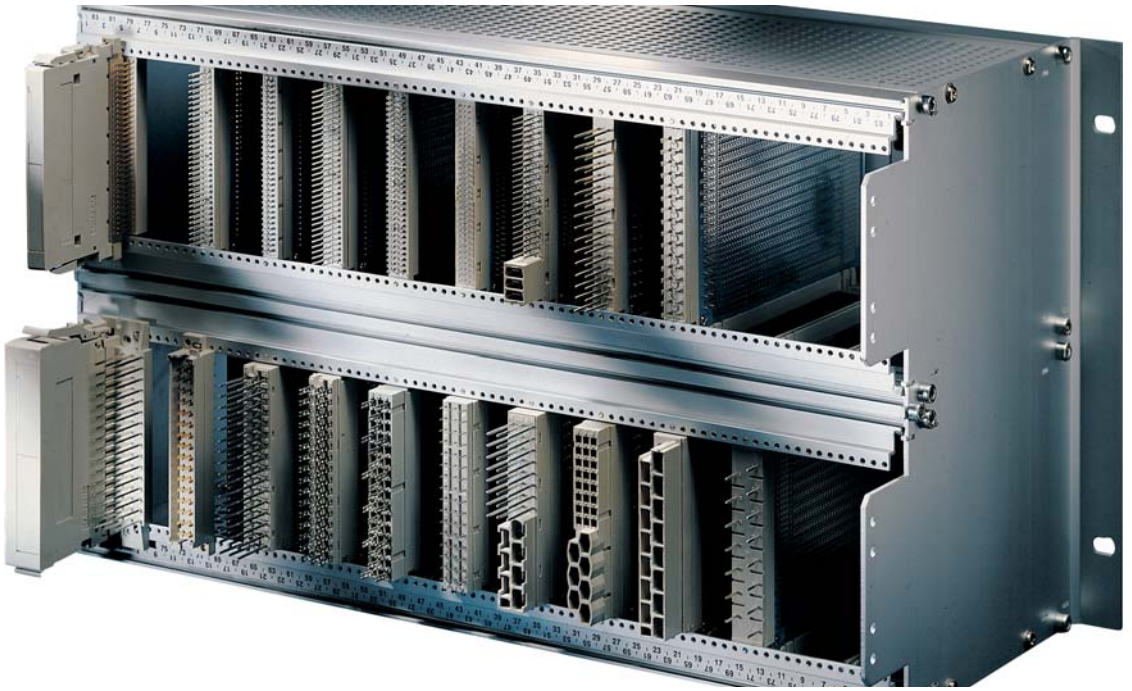

05592002

Standards

- Connectors in accordance with: IEC 60603-2 / DIN 41612

Requirements classes DIN 41612, Part 5
Requirements class 1
- 500 connector cycles
- 250 connector cycles, 21 day gas test with 10 ppm SO_2, measurement of contact resistance
- 250 connector cycles, then visual inspection, no abrasion of contact surface down to the base metal, no impairment of function

Requirements class 2
- 400 connector cycles
- 200 connector cycles, 4 day gas test with 10 ppm SO_2, measurement of contact resistance
- 200 connector cycles, then visual inspection, no abrasion of contact surface down to the base metal, no impairment of function

Requirements class 3
- 50 connector cycles, no gas test, then visual inspection, no impairment to function

Requirements class VG 95 324, part 1
- 500 connector cycles, then 1 day gas test with 10 000 ppm SO_2 and 1 day gas test with 10 000 ppm H_2S, then visual inspection, no abrasion of contact surface down to base metal, no impairment of function

Modifications

Extended delivery program

- Connectors to IEC 60603-2 with requirements classes 1, 3 and defence equipment standard
  Minimum quantity: 300 pieces
- Connectors with selective contacts
  Minimum quantity: 500 pieces
- Complementary types to standard IEC 60603-2 („half" type)
  Minimum quantity: 300 pieces
- Not catalogued connectors to IEC 60603-2
  Minimum quantity: 300 pieces

Note:
Prices and delivery times available on request

Connectors, busbars

Overview 11.3

General technical data

Contamination level 1
None or dry, non-conductive contamination.
Contamination has no effect.

Contamination level 2
Non-conductive contamination only.
Occasional transient conductivity due to condensation may occur.
Contamination levels 3 and 4 are not taken into account as they do not apply to the connectors listed in this catalogue.
The minimum creepage distances represented in the table relate to the CTI values of insulation group III a/b.

Reference voltage, minimum creepage distance and contamination level

Reference voltage V U_{ACeff} or U	12.5	25	32	50	63	80	100	125	160	200	250	320	400	500	630	800	1000
Minimum creepage distance in mm																	
- Contamination level 1	0.09	0.125	0.14	0.18	0.2	0.22	0.25	0.28	0.32	0.42	0.56	0.75	1.0	0.3	1.8	2.4	3.2
- Contamination level 2	0.42	0.50	0.53	1.2	1.25	1.30	1.40	1.50	1.60	2.00	2.50	3.20	4.0	5.0	6.3	8.0	10

Derating diagrams

Type B, C, R

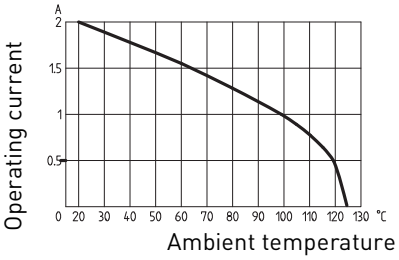

The current-carrying capacity of connectors is restricted by the thermal loading capacity of the materials, the contact elements - including connections - and insulation elements.
The derating curve applies therefore for currents that may flow continuously (not intermittently) and simultaneously through each contact element of the connector without exceeding the maximum acceptable temperature.
Measurement and control procedures in accordance with DIN 41 640, part 3.

Type D, E, F, G

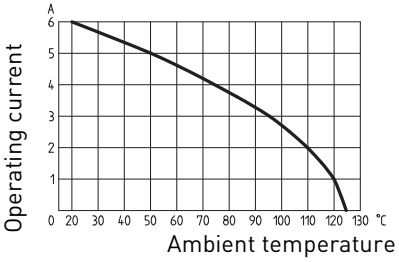

Type H

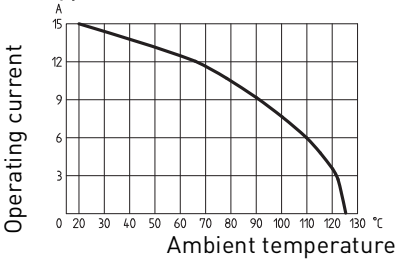

Type D, E, F, G

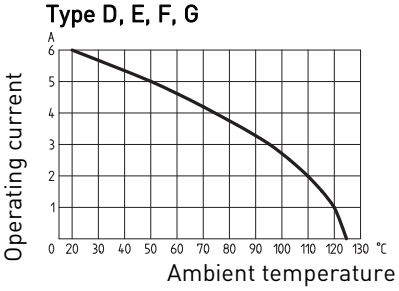

Type H

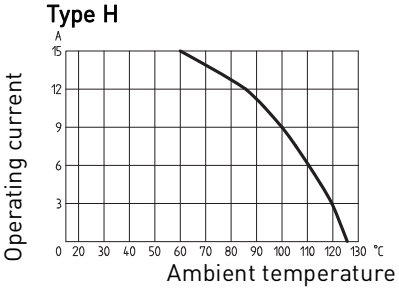

sva42501 sva42502 sva42503 sva42504 sva42505

Connectors
Connector types 11.4
Blank connector housings/locking levers 11.6
Keying/coding 11.7
Keying/coding pegs for codable female connectors 11.7
Keying/coding strips 11.8
PCB strengthening 11.8
Connectors, 3-pin 11.9

Busbars
4-pin for Faston connector 6.3 x 0.8 mm 11.10
PCB busbars 11.11
Busbars 11.11

Accessories – Connectors

Overview of types, connectors EN 60603 (DIN 41612)

Order Information

Description	Number of contacts	Row assignment	Type B	Type C	Type C for ribbon cables	Type R	Type D
Drawing: View of rear of plug			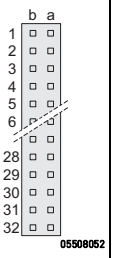 05508052	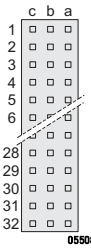 05508053	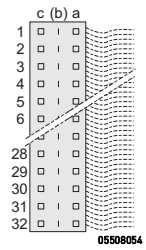 05508054	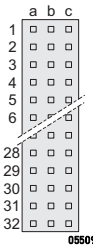 05509052	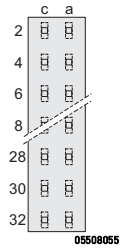 05508055
			1 piece	1 piece	1 piece	1 piece	1 piece
Male connector							
Solder pins, length 3 mm, 0.6 mm x 0.6 mm; angled	32	a, c	–	69001-826	–	–	69001-831
	64	a, b	69001-801	–	–	–	–
	64	a, c	–	69001-821	–	–	–
	96	a, b, c	–	69001-816	–	–	–
Female connector							
Wire-wrap pins, length 13 mm, 0.6 mm x 0.6 mm, straight;	32	a, c	–	69001-691	–	–	–
	64	a, c	–	69001-685	–	–	–
	96	a, b, c	–	69001-679	–	–	–
Wire-wrap pins, length 20 mm, 1 mm x 1 mm, straight;	32	a, c	–	–	–	–	69001-697
Solder pins, length 2.5 mm, Ø 0.6 mm, straight	64	a, b	69001-664	–	–	–	–
	64	a, c	–	69001-693	–	–	–
	96	a, b, c	–	69001-696	–	–	–
Solder pins, length 3 mm, 0.6 mm x 0.6 mm, angled	64	a, c	–	–	–	69001-976	–
	96	a, b, c	–	–	–	69001-728	–
Solder pins, length 4 mm, Ø 0.6 mm, straight	64	a, c	–	69001-678	–	–	–
	96	a, b, c	–	69001-677	–	–	–
Solder eye, length 5.5 mm	32	a, c	–	–	–	–	69001-698
Snap-on/screw-on for 64-pin cable	64	a, c	–	–	69005-596	–	–
Spring contacts for crimping, 0.14 - 0.5 mm^2, 50 pieces			–	–	–	–	21100-293
Spring contacts for crimping, 0.75 - 1.5 mm^2, 50 pieces			–	–	–	–	21100-294
Torx panhead screw M2.5 × 7, PU 100 pieces, for direct mounting on z-rail			24560-147	24560-147	24560-147	24560-147	24560-147

Technical Data	Type B	Type C	Type C for ribbon cables	Type R	Type D
Connector pitch	2.54 mm	2.54 mm	2.54 mm	2.54 mm	5.08 mm
Current load max. at 20 °C	2 A	2 A	1 A	2 A	6 A
Test voltage U_{eff} contact-contact	1 kV	1 kV	1 kV	1 kV	1.55 kV
Test voltage U_{eff} contact-earth	1.55 kV	1.55 kV	–	1.55 kV	1.55 kV
Contact resistance	≤ 20 mΩ	≤ 20 mΩ	–	≤ 20 mΩ	≤ 20 mΩ
Coding on the connector	–	–	–	–	–
Separate coding	yes	yes	yes	yes	yes
Contact surface	solidly gold-plated	solidly gold-plated	solidly gold-plated	solidly gold-plated	solidly gold-plated
Air gap contact-contact	>1.2 mm	>1.2 mm	–	>1.2 mm	>1.6 mm
Creepage distances contact-contact	>1.2 mm	>1.2 mm	–	>1.2 mm	>3.0 mm
Insertion and withdrawal forces	32-pin < 30 N; 64-pin < 60 N; 96-pin < 90 N		64-pin < 60 N	64-pin < 60 N; 96-pin < 90 N	32-pin < 40 N

Note

- Connectors are compliant with requirements class 2

Accessories – Connectors

Overview of types, connectors EN 60603 (DIN 41612)

Order Information

Description	Number of contacts	Row assignment	Type E	Type F	Type G	Type H	Mixed type (M), type F and type H
Drawing: View of rear of plug			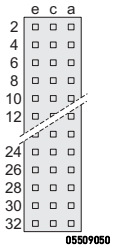 05509050	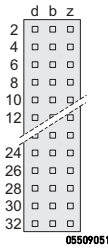 05509051	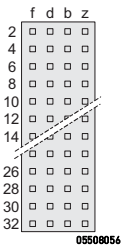 05508056	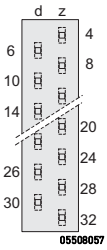 05508057	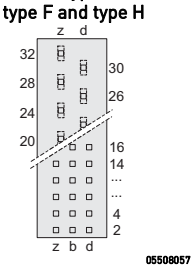 05508057
			1 piece	1 piece	1 piece	1 piece	1 piece
Male connector							
Solder pins, length 2.9 mm, 0.6 mm x 0.6 mm; angled	32	z, b	–	**69001-851**	–	–	–
	32	z, d	–	**69001-853**	–	–	–
	48	a, c, e	**69001-879**	–	–	–	–
	48	z, b, d	–	**69001-846**	–	–	–
	64	z, b, d, f	–	–	**69001-856**	–	–
Solder pins, length 3 mm, 1.2 mm x 0.8 mm; angled; connector pins not protruding	15	z, d	–	–	–	**69001-865**	–
Solder pins, recessed, length 2.9 mm, 1.2 mm x 0.8 mm; angled	15	z, d	–	–	–	**69001-860**	–
FASTON connector 6.3 mm x 0.8 mm; straight	15	z, d	–	–	–	**69001-866**	–
Solder pins, length 2.9 mm, FØ 0.6 mm, H Ø 1.6 mm; angled	24+7-pin	z, b, d	–	–	–	–	**69001-905**
Female connector							
Wire-wrap pins, length 22 mm, 1 mm x 1 mm; straight	32	z, b	–	**69001-717**	–	–	–
	48	a, c, e	**69001-877**	–	–	–	–
	48	z, b, d	–	**69001-711**	–	–	–
	64	z, b, d, f	–	–	**69001-723**	–	–
F: Wire-wrap pins, length 22 mm, 1 mm x 1 mm; H: FASTON connector 6.3 mm x 0.8 mm; straight	24+7-pin	z, b, d	–	–	–	–	**69001-755**
Solder pins, length 4 mm, 0.8 mm x 0.8 mm; straight	15	z, d	–	–	–	**69001-981**	–
Solder pins, length 4.5 mm, 0.4 mm x 0.6 mm; straight	48	z, b, d	–	**69001-884**	–	–	–
Solder pins, length 10 mm, 0.8 mm x 0.8 mm; straight	15	z, d	–	–	–	**69001-980**	–
Wiring with FASTON connector 6.3 mm x 0.8 mm; straight	15	z, d	–	–	–	**69001-733**	–
Solder eyes, length 9.5 mm	32	z, b	–	**69001-718**	–	–	–
	32	z, d	–	**69001-722**	–	–	–
	48	z, b, d	–	**69001-712**	–	–	–
F: Solder eyes; H: FASTON connector 6.3 mm x 0.8 mm; straight	24+7-pin	z, b, d	–	–	–	–	**69001-944**
Torx panhead screw M2.5 × 7, PU 100 pieces, for direct mounting on z-rail			**24560-147**	**24560-147**	**24560-147**	**24560-147**	**24560-147**

Technical Data	Type E	Type F	Type G	Type H	Mixed type (M), type F and type H	
Connector pitch	5.08 mm	5.08 mm	5.08 mm	10.16 mm	5.08 mm	10.16mm
Current load max. at 20 °C	6 A	6 A	6 A	15 A	6 A	15 A
Test voltage U_{eff} contact-contact	1.55 kV	1.55 kV	1.55 kV	3.10 kV	1.55 kV	3.10 kV
Test voltage U_{eff} contact-earth	1.55 kV	2.50 kV	2.50 kV	3.10 kV	2.50 kV	3.10 kV
Contact resistance	≤ 20 mΩ	≤ 20 mΩ	≤ 20 mΩ	≤ 8 mΩ	≤ 20 mΩ	≤ 8 mΩ
Coding on the connector	–	–	–	yes	–	–
Separate coding	yes	yes	yes	yes	yes	yes
Contact surface	solidly gold-plated	solidly gold-plated	solidly gold-plated	hard silver-plated	solidly gold-plated	hard silver-plated
Air gap contact-contact	>1.6 mm	>1.6 mm	>1.6 mm	>4.5 mm	>1.6 mm	>4.5 mm
Creepage distances contact-contact	>3.0 mm	>3.0 mm	>3.0 mm	>8.0 mm	>3.0 mm	>8.0 mm
Insertion and withdrawal forces	48-pin < 75 N	32-pin < 50 N 48-pin < 75 N	64-pin < 100 N	15-pin < 90 N	24+7-pin < 85 N	

Note

- Connectors are compliant with requirements class 2

Blank connector housings/locking levers

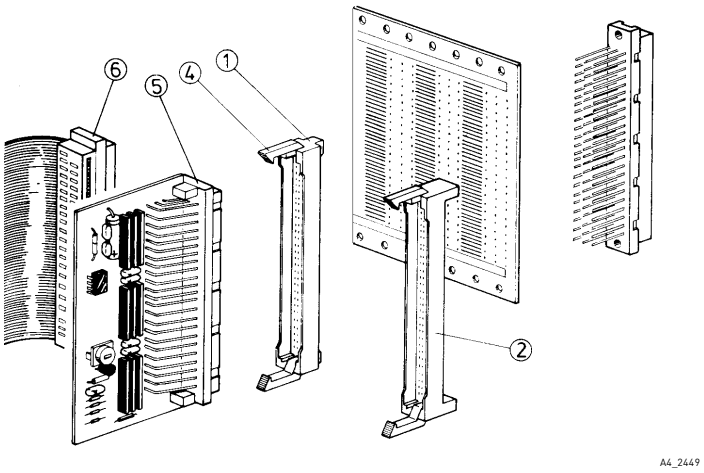

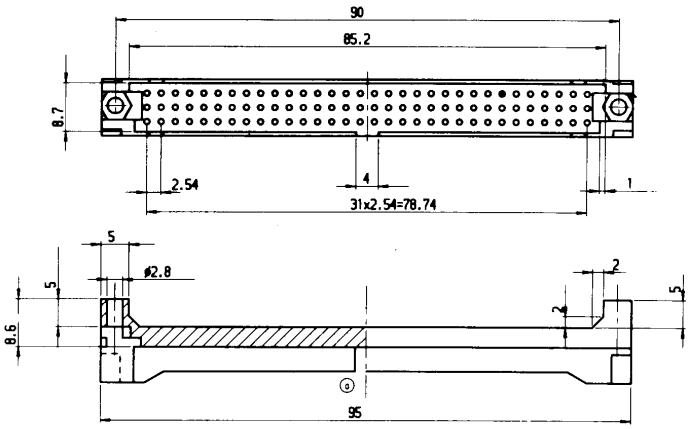

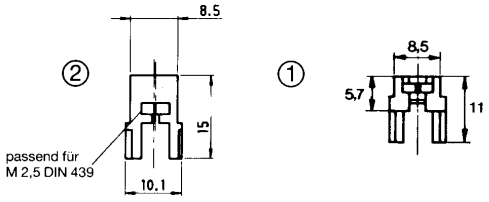

- For types C and R
- The connector housing is fixed to the board with screws; it is pushed over wire wrap posts (e.g. on the rear of backplanes) and thereby forms a male connector
- Locking levers can be used e.g. to lock terminator boards or I/O connectors in place

CE

Order Information

Item	Description	Qty/PU	Part no.
1	Housing with M 2.5 nuts, for posts 0.6 × 0.6 × 17 mm, backplane thickness 3.2 mm	1	**29090-001**
2	Housing with M 2.5 nuts, for posts 0.6 × 0.6 × 13 mm, backplane thickness 3.2 mm	1	**29090-002**
2	Housing with M 2.5 nuts, for posts 0.6 × 0.6 × 13 mm, backplane thickness 1.6 mm	1	**29001-019**
4	Locking lever for type R, grey	1	**69001-995**
4	Locking lever for type C, black	1	**69001-106**

Note

- 29090-001 is the replacement product for 69001-210 and 29001-015
- 29090-002 is the replacement product for 69001-814 and 29001-016
- 29001-019 is the replacement product for 69001-311

Accessories – Connectors

Keying/coding pegs for codable female connectors

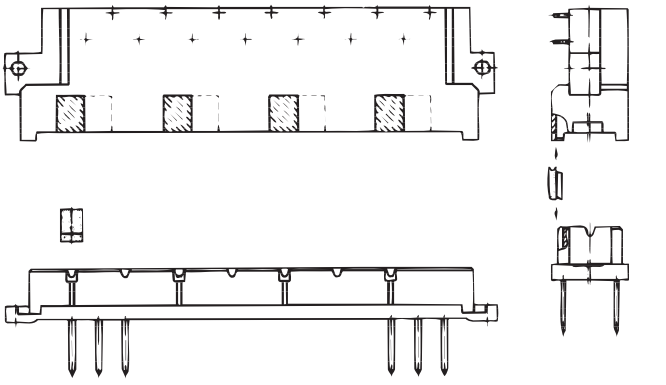

- For female connector type H
- Without loss of space
- Max. 70 keying/coding possibilities
- The keying/coding pegs are plugged into the female connector; the corresponding keying/coding fields (situated opposite) of the male connectors are broken out

Order Information

Description	Qty/PU	Part no.
Keying/coding pegs, PBTP, UL 94 V-0	40	**21101-252**

Keying/coding

- Keying/coding prevents plug-in units becoming mixed up
- Keying/coding for type H
  - Fixing direct onto plug by means of keying/coding peg in the female connector
- Keying/coding for all types in accordance with EN 60603 (DIN 41612)
  - Fixing via additional mounting of keying/coding strips

Keying/coding pegs Part no.	For female connector Part no.
	69001-733
21101-252	**69001-980**
	69001-981

Accessories – Connectors

Keying/coding strips

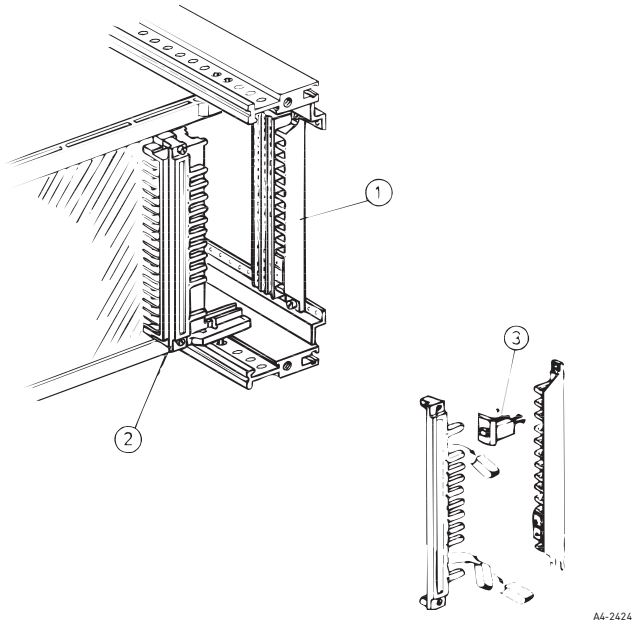

- For all types in accordance with EN 60603 (DIN 41612)
- Used with plug-in units to prevent mix-up
- Space for plugs with keying/coding strip:
  – 4 HP for types B, C, D, F, H
  – 5 HP for types E, G
- 66 keying/coding possibilities when two coding pins are used
- 924 keying/coding possibilities when six coding pins are used

Order Information

Item	Description	Qty/PU	Part no.
1, 2, 3	Contact strip PBTP, UL 94 V-0, 10 pieces, female strip, PBTP, UL 94 V-0, 10 pieces, keying/coding pins, PBTP, UL 94 V-0, 20 pieces	1	**20800-042**
1, 2, 3	Spacer element for types E, G	20	**20800-036**
3	Keying/coding pin	100	**20800-078**
Assembly kit Screw M2.5 × 18, PU 100 pieces			**21100-404**

Note

- For connectors types E and G spacers are always required

PCB strengthening (9 U)

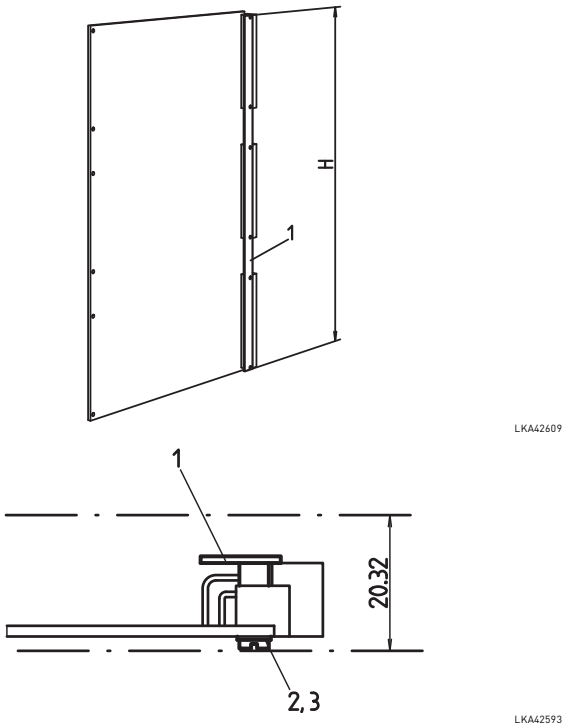

- Protects large PCBs from bending
- Creates an additional crossbar (in accordance with IEEE recommendations, P 896, Nubus, Multibus® II etc.) that links all connectors
- Fixing points match connectors in accordance with EN 60603 (DIN 41612), types B, R, C and D

Delivery comprises (kit)

Item	Qty	Description
1	1	PCB strengthening, Al extrusion, anodised, cut edges plain; separator, stainless steel, riveted on
2	6	Cheesehead screw M 2,5 × 12, St, nickel-plated
3	6	Washer 2.6, St, nickel-plated

Order Information

Description	Height H mm	Part no.
For 9 U PCBs	361.6	**20809-441**

Accessories – Connectors

Connectors, 3-pin

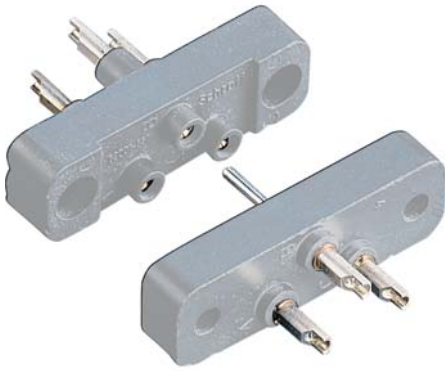

05592043

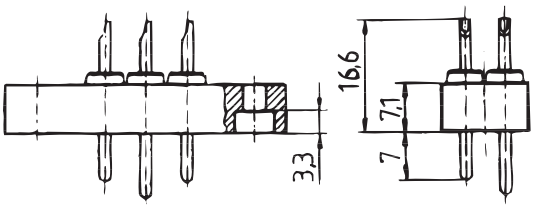

A4-5316

Dimensional drawing of multi-pin connector

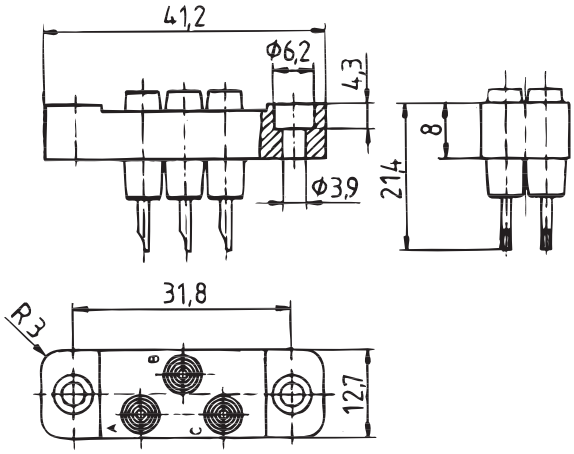

05009052

Dimensional drawing of socket terminal strip

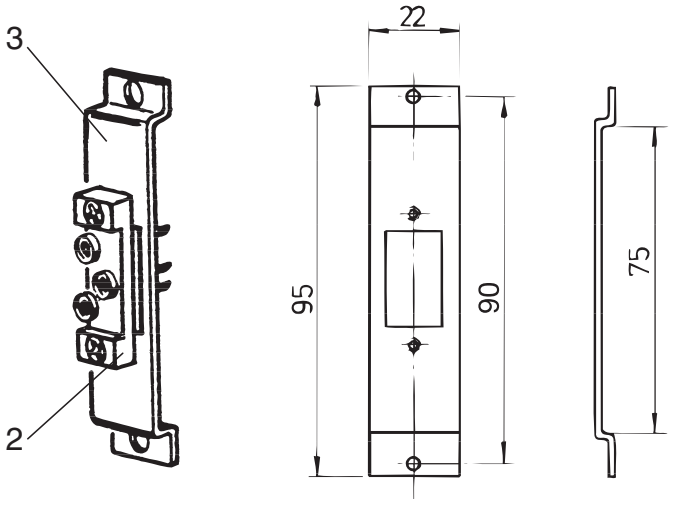

A4-5317

3: Mounting plate
2: Socket terminal strip

A4-2486a

Dimension drawing of mounting plate

- Used for mains/line voltage supplies
- Male connector with advanced earth protection contact (B)

Order Information

Item	Description	Qty/PU	Part no.
1	Male connector	1	**69001-651**
2	Female connector strip	1	**69001-652**
3	Mounting plate for fixing in subrack, socket terminal strip mounts on z-rail (with threaded holes to EN 60603, DIN 41612)	1	**30812-002**

Technical data

Nominal current per contact	10 A
Air gap	≥ 4.4 mm
Creepage distance	≥ 7.6 mm
Test voltage	3 kV (eff)
Contact resistance	approx. 10 mΩ
Connection	Solder eye connection up to 1 mm
Ambient temperature	23 °C ... 130 °C
Contact pins, sockets	galvanically silver-plated
Housing material	Keripol R gray (type 802 as per DIN 16911)
Flammability	UL 94-HB

Accessories – Horizontal busbars

Busbar, 4-pole, for Faston connectors, 6.3 x 0.8 mm

00811001

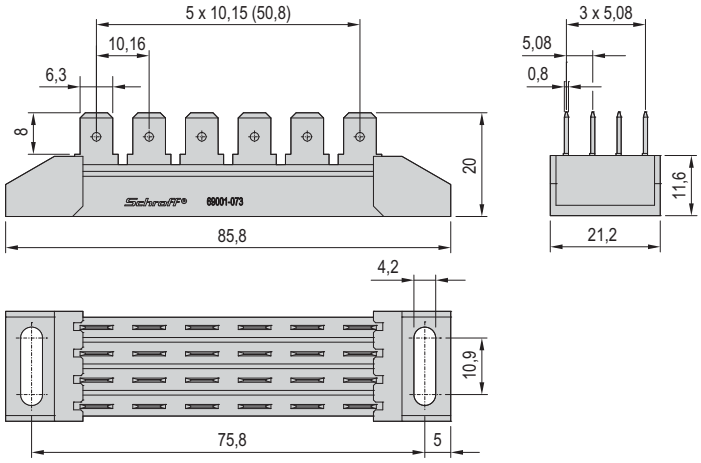

00811050

- 24 connection points (4-poles, 6 connectors each)
- To supply mains voltage to 19" subracks
- Fixing in HP grid increments (spacing 15 HP), external dimension < 17 HP

NEW

Delivery comprises

Item	Qty	Description
1	1	Busbar, 4-pole (for 6 Faston connectors 6.3 x 0.8 mm

Order Information

Description	Part no.
Busbar, 4-pole, for Faston connectors, 6.3 x 0.8 mm	**69001-073**

Technical data

Operating voltage	250 V_{AC}
Test voltage: Bar – Bar	3.5 kV_{eff}
Test voltage: Pin – Earth	5.0 kV_{eff}
Operating current at 20 °C per pin (= 6 connections)	$\sum I \leq 35$ A
Temperature range	-40 °C ... +100 °C
Material: Faston, busbars	CuZn, surface tin-plated
Material: insulating body	PC/ABS, UL 94-V0
Connector type	for Fastons 6.3 × 0.8 mm, 4-pin, 6 Fastons per pin
Connection pitch	5.08 × 10.16 mm

Note

- Other lengths, 2-pole and 3-pole versions, brass contacts available on request

Accessories – Horizontal busbars

PCB busbars

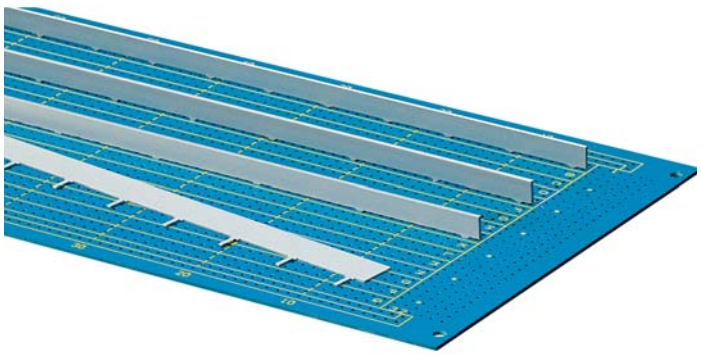

00892008

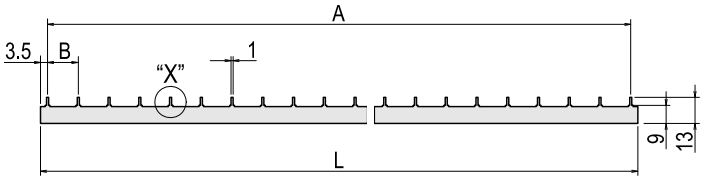

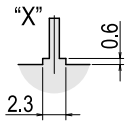

A41743

- Power distribution on printed circuit boards and backplanes
- Fault elimination
- Increases the stiffness of PCBs

Order Information

Width B HP	Length L mm	Dimension A mm	Part no.
3	220.3	14 × 15.24 = 213.36	**30925-001**
3	342.3	22 × 15.24 = 335.28	**30925-002**
4	210.2	10 × 20.32 = 203.2	**30925-003**
4	332.1	16 × 20.32 = 325.12	**30925-004**
5	210.2	8 × 25.4 = 203.2	**30925-005**
5	337.2	13 × 25.4 = 330.2	**30925-006**

Delivery is exclusively in Standard Pack Quantity (SPQ): Please order at least 10 pieces or a multiple. Pricing is per individual item.

Technical data

Conductor material	E-Cu, tin-plated
Pin dimensions	0.8 x 1.0 mm
Max. operating current	30 A
DC resistance	2.5 mΩ/m

Note

- Special designs available on request

Solder strip conductor

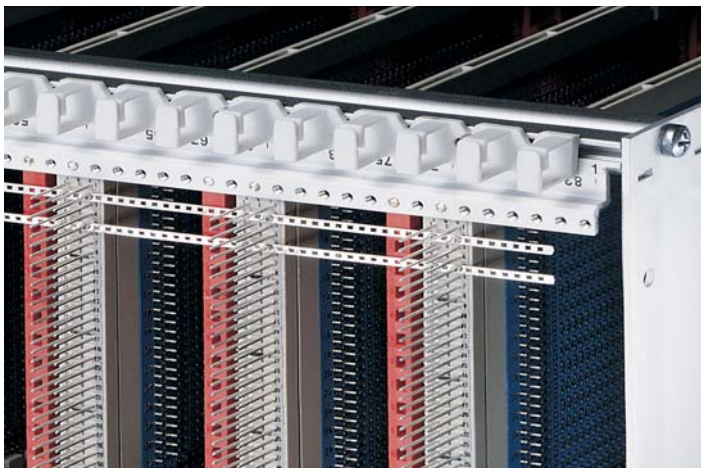

00892016

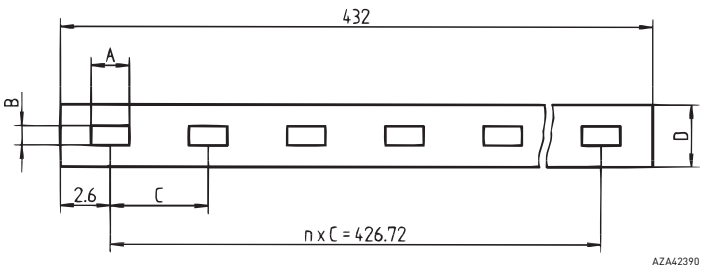

AZA42390

- Efficient linking of connections in the same grid and with the same potential
- Also suitable for EN 60603 (DIN 41612) connectors with wire-wrap pin

Order Information

Connection type	A mm	B mm	C mm	D mm	n	Qty/PU	Part no.
Wire-wrap pins 0.6 × 0.6 mm	1.14	0.9	2.54	2.3	168	1	**60800-064**
Wire-wrap pins 1.0 × 1.0 mm	1.65	1.4	5.08	3.2	84	1	**60800-080**

Technical data

Conductor material	E-Cu F30, tin-plated
Max. operating current wire-wrap pins 0.6 × 0.6 mm	⩽ 4 A
Max. operating current wire-wrap pins 1.0 × 1.0 mm	⩽ 4 A

Content

Cabinets 1
Wall mounted cases 2
Accessories for cabinets and wall mounted cases . 3
Climate control . 4
Electronics cases 5
Subracks/ 19" chassis 6
Front panels, plug-in units . . . 7
Systems 8
Power supply units 9
Backplanes . . . 10
Connectors, front panel component system 11
Appendix 12

Front panel component system

05092001

05092004

Components are pre-mounted in plastic bodies that can be arranged in rows; horizontal grid (3 planes) and vertical grid (8 or 16 planes)

05092008

A mounting frame with integrated PCB bracket fixes the front elements and forms the mechanical link between PCB, front elements and front panel

05092002

Front element system in use

Standards

- IEC 60297-3-101
  IEC 60603 (DIN 41494 part 8)

Operating and display elements for front panels

- Pre-assembled front element components
- Mounting frames with integrated PCB brackets
- Assembled front elements can be soldered in one step
- Subsequent front panel mounting

05092009

LEDs (light-emitting diodes)

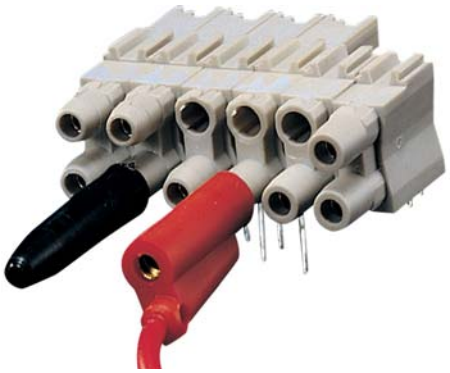

05092005

Test and make-break sockets

05092007

Potentiometers

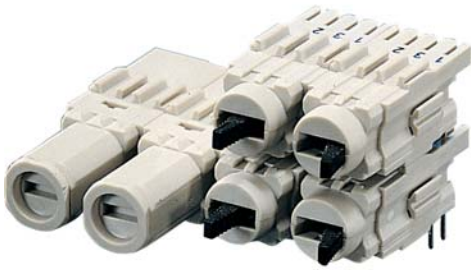

05092006

Fuse holders

05092008

Mounting frames with integrated PCB brackets

Front panel component system
Single LEDs 11.14
Double LEDs 11.16
Technical data LEDs 11.17
Test sockets 11.18
Make-break socket 11.19
Technical data for test and make-break sockets and fuse holders 11.20
Potentiometers .. 11.21
Mounting frames . 11.22
Drilling template . 11.23
Design aids 11.24

Front panel component system

Single LED, long type, Ø 3.2 mm

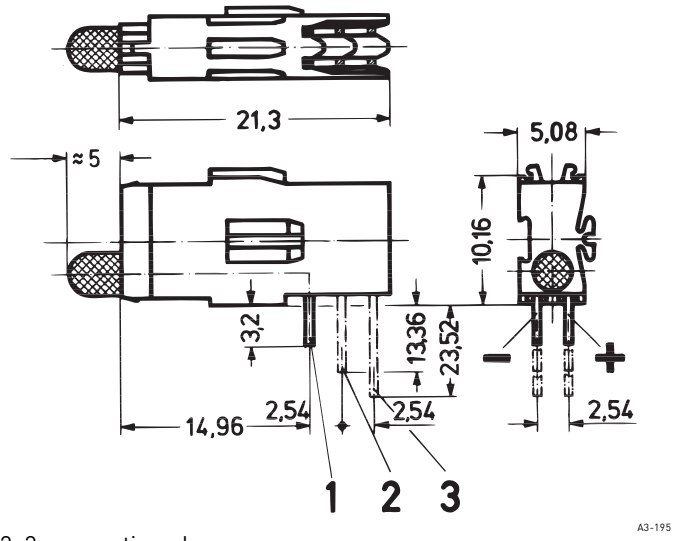

1, 2, 3 = mounting planes

- Long type for mounting planes 1, 2 and 3

Order Information

Description	Colour	1 Part no.	2 Part no.	3 Part no.
Low current LED	red	**69004-240**	**69004-258**	**69004-259**
Low current LED	yellow	**69004-242**	69004-262	69004-263
Low current LED	green	**69004-241**	69004-260	69004-261
Standard LED	red	**69004-059**	69004-060	**69004-061**
Standard LED	yellow	**69004-065**	69004-066	69004-067
Standard LED	green	**69004-062**	**69004-063**	**69004-064**

Delivery is exclusively in Standard Pack Quantity (SPQ):
Please order at least 10 pieces or a multiple. Pricing is per individual item.

Note

- Dimensions of connecting pins:
  0.5 × 0.5 mm (mounting plane 1)
  0.63 × 0.63 mm (mounting planes 2 and 3)
- Required front panel drill hole: Ø 4 mm
- Technical data see page 11.17

Single LED, short type, Ø 3.2 mm

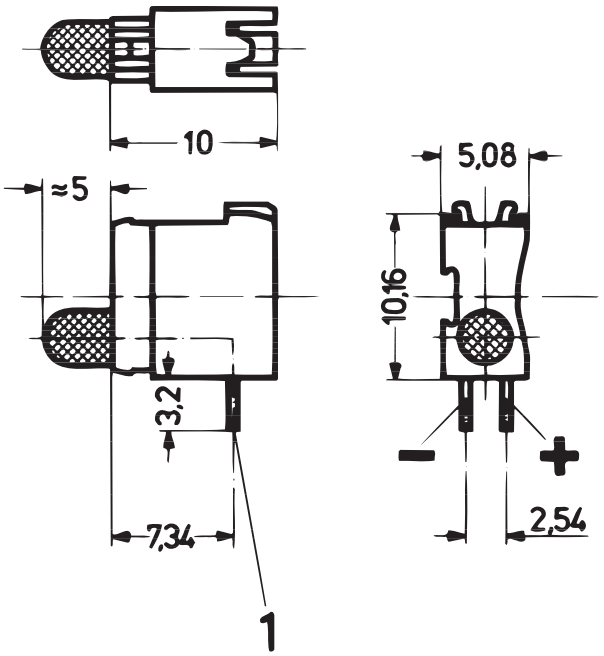

1 = mounting plane

- Short type for mounting plane 1

Order Information

Colour	Low current LED Part no.	Standard LED Part no.
red	**69004-264**	**69004-121**
yellow	**69004-266**	**69004-123**
green	**69004-265**	**69004-122**

Delivery is exclusively in Standard Pack Quantity (SPQ):
Please order at least 10 pieces or a multiple. Pricing is per individual item.

Note

- Dimensions of connecting pins: 0.5 × 0.5 mm
- Required front panel drill hole: Ø 4 mm
- Technical data see page 11.17

Front panel component system

Single LED, long type, Ø 5 mm

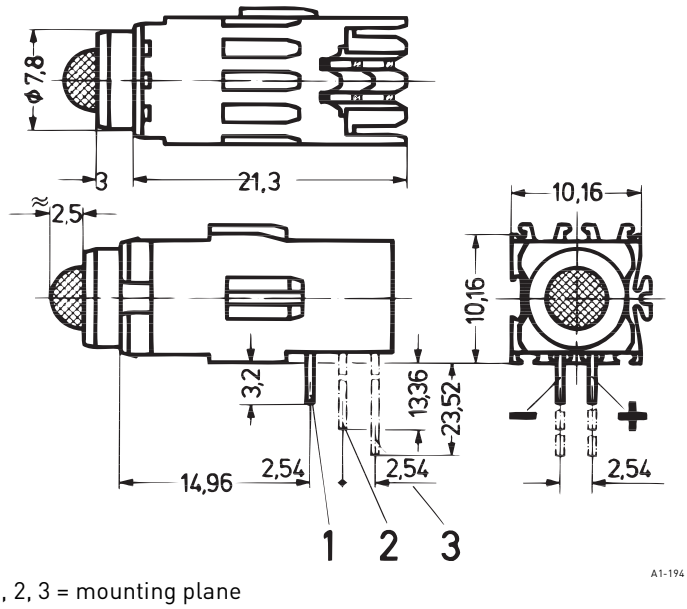

1, 2, 3 = mounting plane

- Long type for mounting plane 1, 2 and 3

Order Information

Description	Colour	1 Part no.	2 Part no.	3 Part no.
Low current LED	red	**69004-250**	69004-251	69004-252
Low current LED	yellow	**69004-249**	**69004-256**	69004-257
Low current LED	green	**69004-253**	69004-254	69004-255
Standard LED	red	**69004-050**	**69004-051**	69004-052
Standard LED	yellow	**69004-056**	**69004-057**	69004-058
Standard LED	green	**69004-053**	**69004-054**	**69004-055**

Delivery is exclusively in Standard Pack Quantity (SPQ):
Please order at least 10 pieces or a multiple. Pricing is per individual item.

Note

- Dimensions of connecting pins:
  0.5 × 0.5 mm (mounting plane 1)
  0.63 × 0.63 mm (mounting planes 2 and 3)
- Required front panel drill hole: Ø 8 mm
- Technical data see page 11.17

Front panel component system

Double LED, long type, Ø 3.2 mm

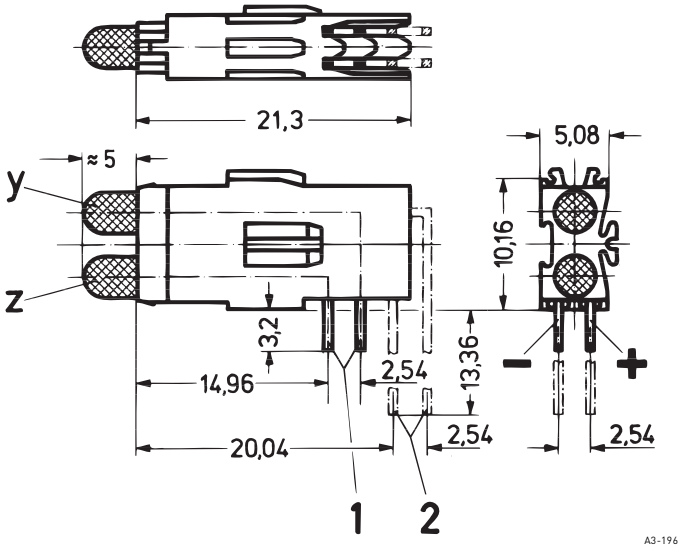

1, 2 = mounting plane

- Long type for mounting plane 1 and 2

Order Information

Description	Colour	1 Part no.	2 Part no.
Low current LED	red/red (Y/Z)	**69004-274**	**69004-275**
Low current LED	green/green (Y/Z)	**69004-276**	**69004-277**
Low current LED	yellow/yellow (Y/Z)	**69004-278**	**69004-279**
Low current LED	red/green (Y/Z)	69004-280	69004-281
Low current LED	red/yellow (Y/Z)	**69004-282**	–
Low current LED	yellow/green (Y/Z)	**69004-284**	–
Standard LED	red/red (Y/Z)	**69004-068**	**69004-069**
Standard LED	green/green (Y/Z)	**69004-071**	**69004-072**
Standard LED	yellow/yellow (Y/Z)	**69004-074**	**69004-075**
Standard LED	red/green (Y/Z)	**69004-077**	69004-078
Standard LED	red/yellow (Y/Z)	**69004-080**	–
Standard LED	yellow/green (Y/Z)	**69004-083**	–

Delivery is exclusively in Standard Pack Quantity (SPQ): Please order at least 10 pieces or a multiple. Pricing is per individual item.

Note

- Dimensions of connecting pins: 0.63 × 0.63 mm
- Required front panel drill hole: Ø 4 mm
- Technical data see page 11.17

Double LED, short type, Ø 3.2 mm

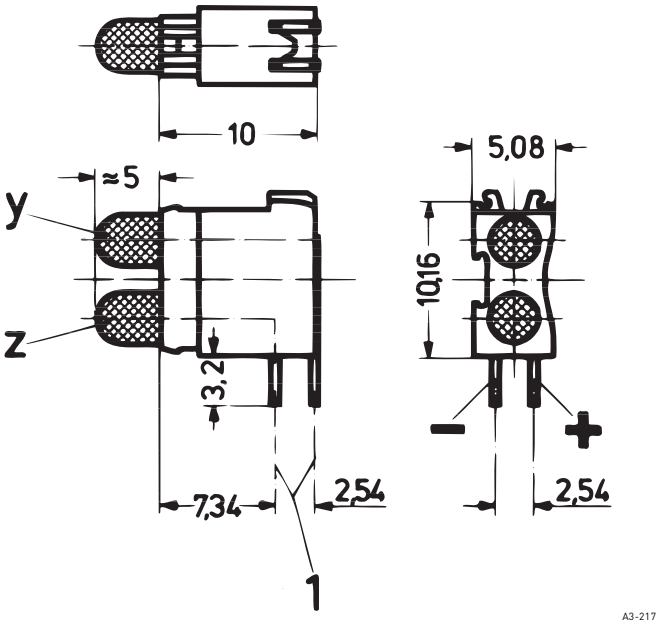

1 = mounting plane

- Short type for mounting plane 1

Order Information

Colour	Low current LED Part no.	Standard LED Part no.
red/red (Y/Z)	**69004-286**	**69004-124**
yellow/yellow (Y/Z)	**69004-288**	**69004-126**
green/green (Y/Z)	**69004-287**	**69004-125**
red/green (Y/Z)	**69004-289**	**69004-127**
red/yellow (Y/Z)	**69004-290**	**69004-128**
yellow/green (Y/Z)	**69004-291**	**69004-129**

Delivery is exclusively in Standard Pack Quantity (SPQ): Please order at least 10 pieces or a multiple. Pricing is per individual item.

Note

- Dimensions of connecting pins: 0.5 × 0.5 mm
- Required front panel drill hole: Ø 4 mm
- Technical data see page 11.17

Front panel component system

Dimensions LEDs

A = standard LED
B = low current LED

Absolute maximum data T_a = 25 °C	A	B	A	B	A	B	A	B	A	B	A	B
	red, Ø 3.2 mm		red, Ø 5 mm		yellow, Ø 3.2 mm		yellow, Ø 5 mm		green, Ø 3.2 mm		green, Ø 5 mm	
Reverse voltage V	5	3	5	3	5	3	5	3	5	3	5	3
On-state current mA	25	30	25	30	25	30	25	30	25	30	25	30
Power dissipation mW	100	75	100	75	100	75	100	75	100	75	100	75
Forward current mA (t < 10 µs)	100	75	100	75	100	75	100	75	100	75	100	75
Forward voltage V – type (10 mA/2 mA)	2.1	2.1	2.1	2.1	2.1	2.2	2.1	2.2	2.1	2.2	2.1	2.2
– max. (10 mA/2 mA)	3	3	3	3	3	3	3	3	3	3	3	3
Luminous intensity mcd – at 2 mA	–	1.5	–	3.1	–	1.4	–	3.2	–	2	–	3.3
– at 10 mA [1]	1.8	13.4	2.2	25.1	2.7	13.4	3.4	28.6	3.2	24.6	3.9	25.7
– at 20 mA [1]	3.6	26.8	4.4	48.2	5.4	28.7	6.8	60.8	6.4	54.9	7.8	54.6
Wavelength nm (10 mA/2 mA)	635	650	635	650	585	585	585	585	565	563	565	563
Thermal resistance °C/W	400	470	350	390	400	470	350	390	400	470	350	390
Angle of reflected beam	± 50°											
Storage temperature	–55 ... +100 °C											
Operating temperature	–55 ... +100 °C (low-current LED)/–40 ... +85 °C (Standard-LED)											
Solder temperature	260 °C/max. 5 sec (processing advice for wave soldering: protect plastic body against solder wave)											
Insulating body	PBT (Crastin)											
Flammability of insulation body	UL 94 V-0											

1) The low current LEDs can be used from 2 to 20 mA (without reduction of lifespan), which means that a significantly higher luminosity can be achieved.

Front panel component system

Test socket, Ø 2 mm

Long type

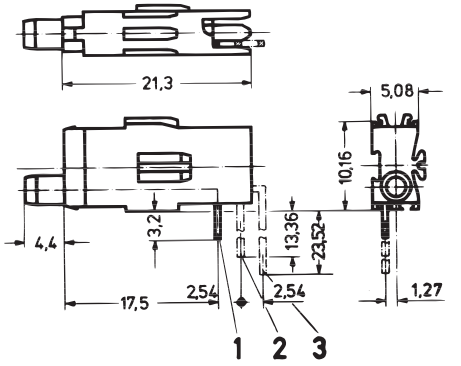

1, 2, 3 = mounting plane

Short type

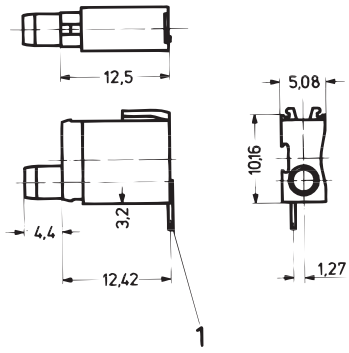

1 = mounting plane

- Long type for mounting plane 1, 2 and 3
- Short type for mounting plane 1

Order Information

For application in	1	2	3
	Part no.	Part no.	Part no.
Long type	69004-086	69004-087	69004-088
Short type	69004-130	–	–

Delivery is exclusively in Standard Pack Quantity (SPQ): Please order at least 10 pieces or a multiple. Pricing is per individual item.

Note

- Dimensions of connecting pins: 0.3 × 0.6 mm
- Required front panel drill hole: Ø 4 mm
- Technical data see page 11.20

Double test socket, Ø 2 mm

Long type

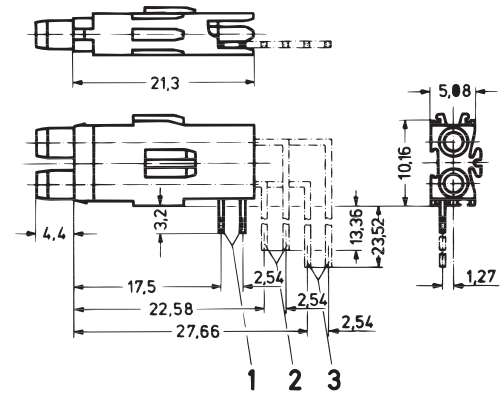

1, 2, 3 = mounting plane

Short type

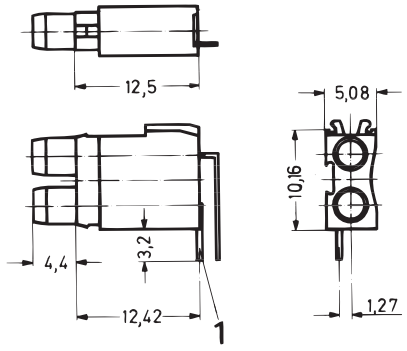

1 = mounting plane

- Long type for mounting plane 1, 2 and 3
- Short type for mounting plane 1

Order Information

For application in	1	2	3
	Part no.	Part no.	Part no.
Long type	69004-089	69004-090	69004-091
Short type	69004-131	–	–

Delivery is exclusively in Standard Pack Quantity (SPQ): Please order at least 10 pieces or a multiple. Pricing is per individual item.

Note

- Dimensions of connecting pins: 0.3 × 0.6 mm
- Required front panel drill hole: Ø 4 mm
- Technical data see page 11.20

Front panel component system

Double make-break socket, Ø 2 mm

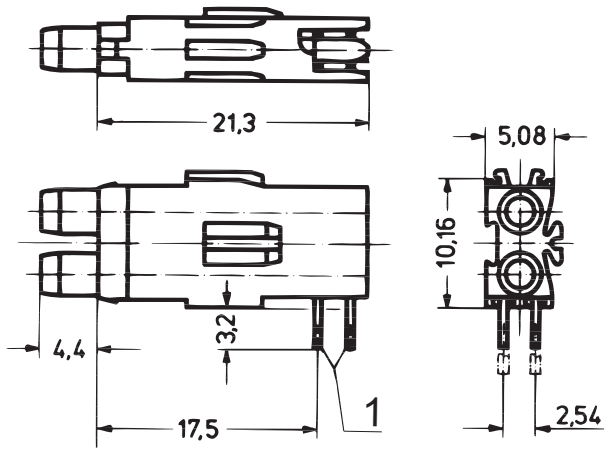

1 = mounting plane

- Long type for mounting plane 1
- Gold-plated contacts
- Can also be used as test socket

Order Information

For application in	Part no.
Long type	**69004-095**

Delivery is exclusively in Standard Pack Quantity (SPQ): Please order at least 10 pieces or a multiple. Pricing is per individual item.

Note

- Dimensions of connecting pins: 0.3 × 0.6 mm
- Required front panel drill hole: Ø 4 mm
- Technical data see page 11.20

Front panel component system

Fuse holder

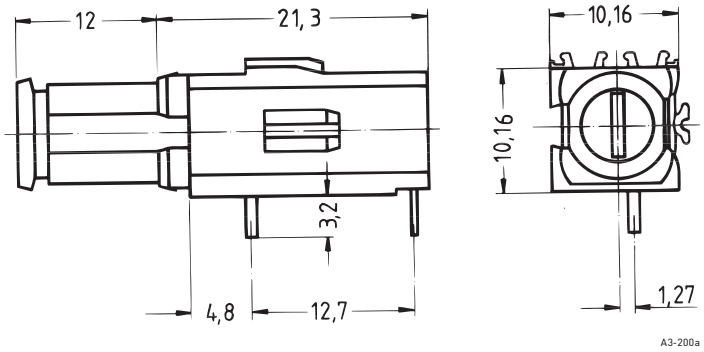

- Long type for mounting plane 1
- For glass fuse inserts 5 x 20 mm to DIN 41 571, 250 V_{AC}, 6.3 A
- Contacts silver-plated

Order Information

Description	Part no.
Long type	69004-098

Delivery is exclusively in Standard Pack Quantity (SPQ): Please order at least 10 pieces or a multiple. Pricing is per individual item.

Note

- Dimensions of connecting pins: 0.7 × 0.6 mm
- Required front panel drill hole: Ø 9 mm

Technical data for test sockets, fuse holders

	Test socket/make-break socket	Double test socket/ double make-break socket	Fuse holder
Operating voltage	⩽ 60 $V_{DC/AC}$	⩽ 30 V_{AC}	⩽ 250 V_{AC}
Operating current	⩽ 1 A	⩽ 1 A	⩽ 6.3 A
Test voltage	1 kV/50 Hz	1 kV/50 Hz	–
Temperature range	–25 ... +70 °C	–25 ... +70 °C	–25 ... +70 °C
Solder temperature	260 °C/max. 5 sec (processing advice for wave soldering: protect plastic body against solder wave)		
Contact material	Copper alloy	Copper alloy	Copper alloy
Contact surface	Selectively gold-plated	Selectively gold-plated	Silver-plated
Insulating body	PBT (Crastin)	PBT (Crastin)	PBT (Crastin)
Climatic use category	HSF [1] to DIN 40 040	HSF [1] to DIN 40 040	HSF [1] to DIN 40 040
Flammability	UL 94 V-0	UL 94 V-0	UL 94 V-0

[1] H = –25 °C; S = +70 °C; F = 75 % air humidity, no condensation

Front panel component system

Cermet potentiometers

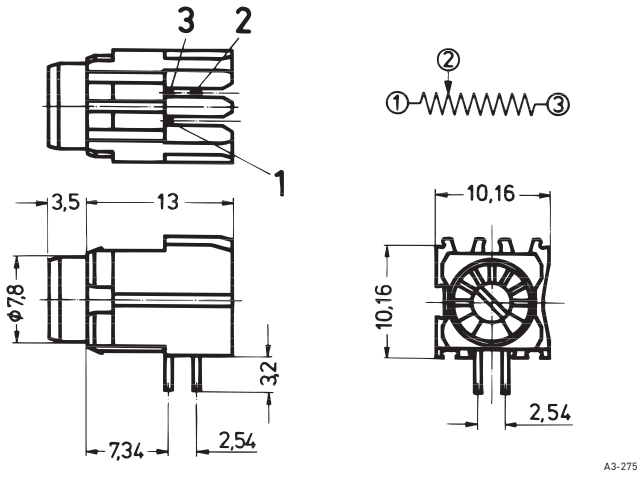

Pins 1 and 2 low-ohmic when left-hinged;
pins 2 and 3 low-ohmic when right-hinged

- Short type for mounting plane 1

Order Information

Resistance kΩ	Part no.
1	**69004-169**
5	**69004-165**
20	69004-161
100	**69004-155**

Delivery is exclusively in Standard Pack Quantity (SPQ):
Please order at least 10 pieces or a multiple. Pricing is per individual item.

Technical data

Operating voltage	⩽ 200 $V_{DC/ AC}$
Operating current	⩽ 100 mA
Load capacity	0.5 Watt at T_a = 70 °C
Test voltage	500 V/50 Hz
Resistance tolerance	± 10 %
Electrical rotation angle	230° ± 5°
Insulation resistance change	100 MΩ
Contact resistance change	3 Ω or 3 %, use largest value
Torque at initial turning	0.021 Nm
Storage temperature	–55 ... +125 °C
Operating temperature	–25 ... +70 °C
Service life (full rotation)	200 cycles
Service life at 0.5 Watt load	1000 h at T_a = 70 °C
Solder temperature	260 °C/max. 5 sec (processing advice for wave soldering: protect plastic body against solder wave)
Insulating body	PBT (Crastin)
Flammability	UL 94 V-0
Resistance of gasket to cleaning	85 °C max. 1 min.
Temperature coefficient	± 100 ppm/K

Note

- Dimensions of connecting pins: 0.45 × 0.45 mm
- Required front panel drill hole: Ø 8 mm
- When left-hinged: pins 1 and 2 low-ohmic
- When right-hinged: pins 2 and 3 low-ohmic

Accessories Front panel component system

Mounting frames with PCB bracket for mounting planes

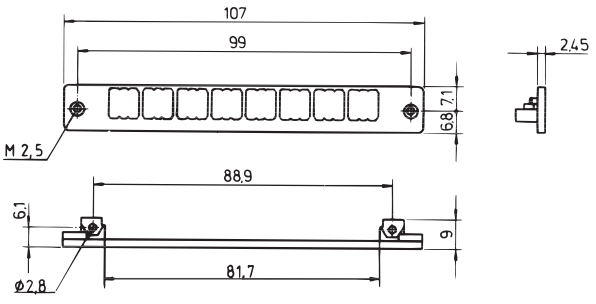

Mounting frame for mounting plane 1

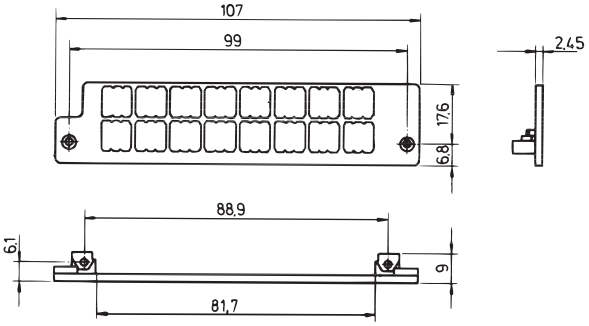

Mounting frame for mounting planes 1 and 2

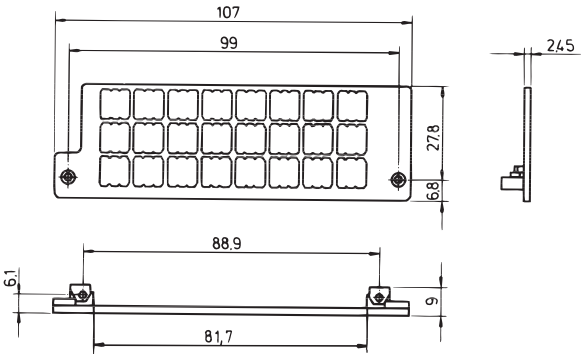

Mounting frame for mounting planes 1, 2 and 3

- With 2 threaded female connectors M 2.5
- Material PBT
- Flammability UL 94 V-0

Order Information

Description	Part no.
Mounting frame for mounting plane 1	**69004-043**
Mounting frame for mounting planes 1 and 2	**69004-044**
Mounting frame for mounting planes 1, 2 and 3	**69004-045**

Delivery is exclusively in Standard Pack Quantity (SPQ): Please order at least 10 pieces or a multiple. Pricing is per individual item.

Note

- Mounting frames nos. 69004-043, 69004-044 and 69004-045 cannot be used in conjunction with the aluminium profile handle for front panels

Accessories Front panel component system

Mounting frame with PCB bracket for frame type plug-in units

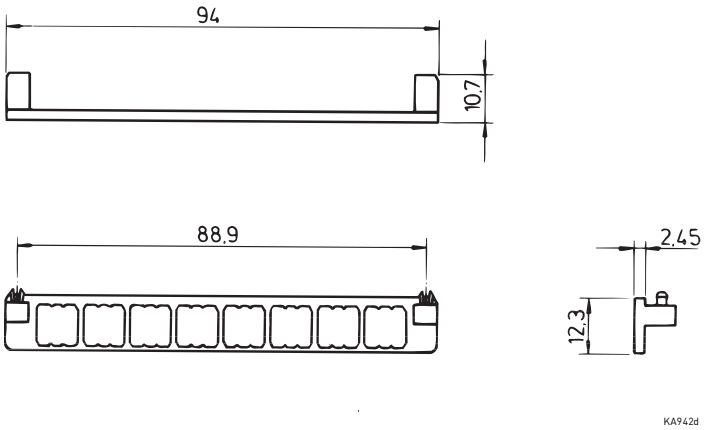

Mounting frame for mounting plane 1

- With 2 grub screws for fixing on PCBs
- Board thickness max. 1.6 mm
- Drilled hole for fixing board max. 2.8 mm

Order Information

Description	Part no.
Support frame with board support for frame type plug-in units	69004-046

Delivery is exclusively in Standard Pack Quantity (SPQ):
Please order at least 10 pieces or a multiple. Pricing is per individual item.

Drilling template

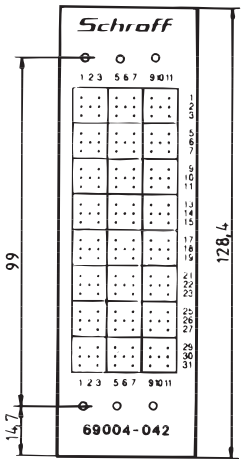

- Design aid for processing of front panels

Order Information

Description	Material	Part no.
Drilling template	EPGC 02 (fibreglass reinforced Epoxy)	**69004-042**

Delivery is exclusively in Standard Pack Quantity (SPQ):
Please order at least 10 pieces or a multiple. Pricing is per individual item.

Accessories Front panel component system

Design aids

Conmponent side of PCB

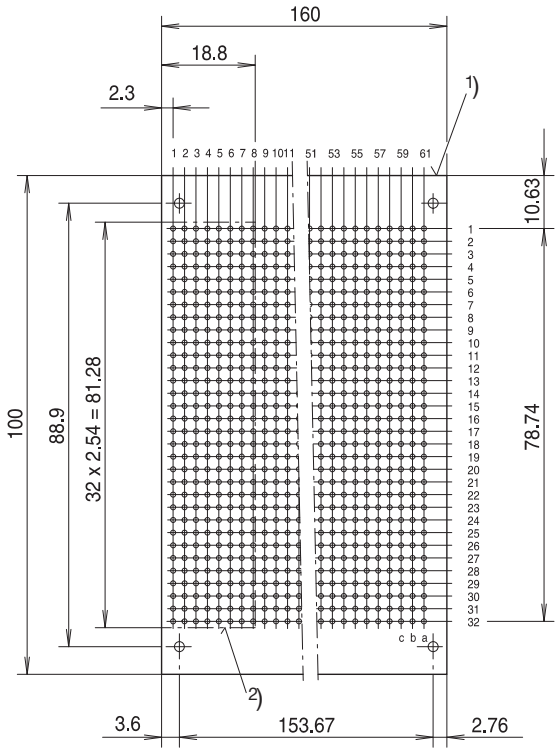

FEA45510

1) PCB
2) Component mounting limit

Front of front panel

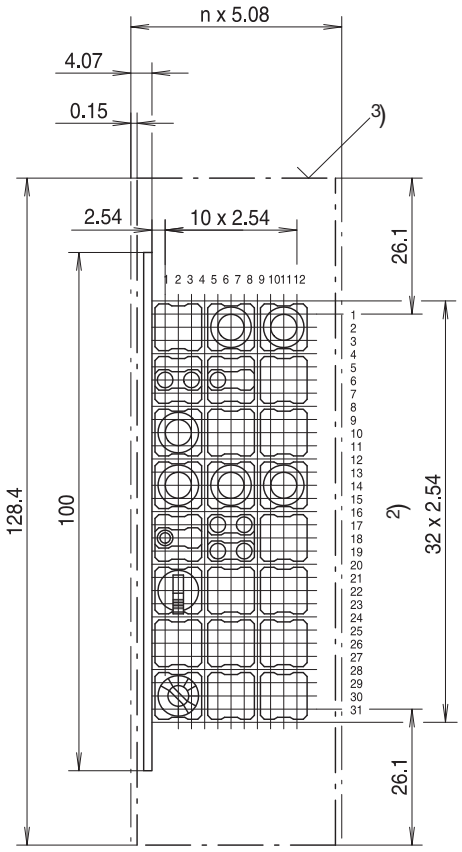

FEA45511

3) Front panel

Placement example

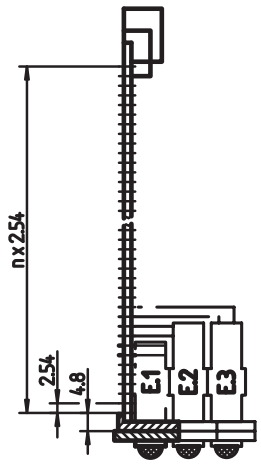

ELA40278

E1 = first mounting plane
E2 = second mounting plane
E3 = third mounting plane

Accessories Front panel component system

Design aids

PCB tracks
View solder side
Short type

LED,
Ø 3.2 mm

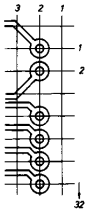

A4_277a

Double LED,
Ø 3.2 mm

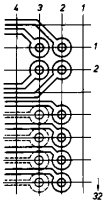

A4_277b

Test socket,
Ø 2 mm

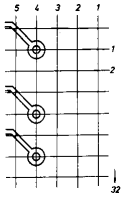

A3_215a

Double test socket,
Ø 2 mm

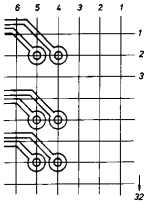

A3_215b

Potentiometer

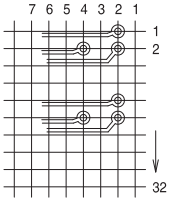

FEA45990

View solder side
Long type

LED,
Ø 3.2 mm

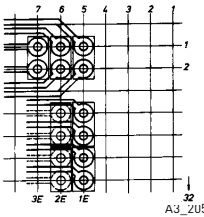

A3_205a

Double LED,
Ø 3.2 mm

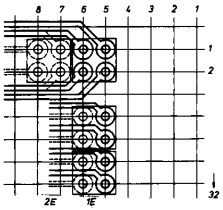

A3_205b

LED,
Ø 5 mm

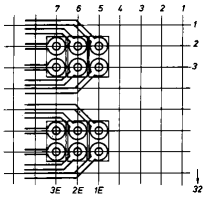

A4_272

Test socket,
Ø 2 mm

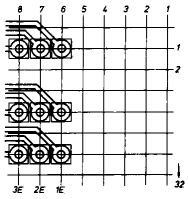

A3_205c

Double test socket,
Ø 2 mm

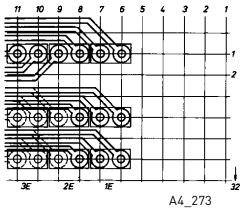

A4_273

Make/break socket,
Ø 2 mm

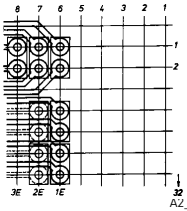

A2_114a

Double make-break socket,
Ø 2 mm

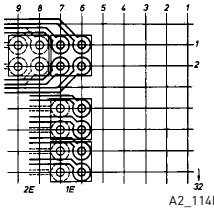

A2_114b

Fuse holder

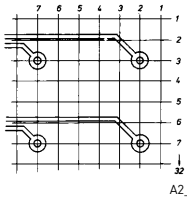

A2_114d

Dimensions of connecting pins	Recommended hole Ø	Solder eyes Ø
0.5 × 0.5 mm	1.0 mm ± 0.05	2.1 mm ± 0.1
0.63 × 0.63 mm	1.1 mm ± 0.05	2.2 mm ± 0.2
0.3 × 0.6 mm	0.9 mm ± 0.05	2.0 mm ± 0.2
0.7 × 0.6 mm	1.1 mm ± 0.05	2.1 mm ± 0.2
0.4 × 0.6 mm	0.9 mm ± 0.05	2.0 mm ± 0.2
0.45 × 0.45 mm	0.7 mm ± 0.05	1.8 mm ± 0.2

PCB tracks width min. 0.6 mm
Grid 2.54 mm

Appendix

30403001

Quality - Environment - Safety

30403050

Continously improving our processes and therefore the quality of the Schroff products - that is the subject of the QES (Quality - Environment - Safety) management system.
In order to achieve these targets, a strategy has been developed which includes all departments of the company.

This integral QES management system is documented in a manual and validated through audits and systematically coordinated inspections. Above all, the system is based on the motivation of the entire workforce which is promoted through exemplary working conditions and efficient training activities.

For you, the total of all these activities provides: highest quality and reliability - worldwide.

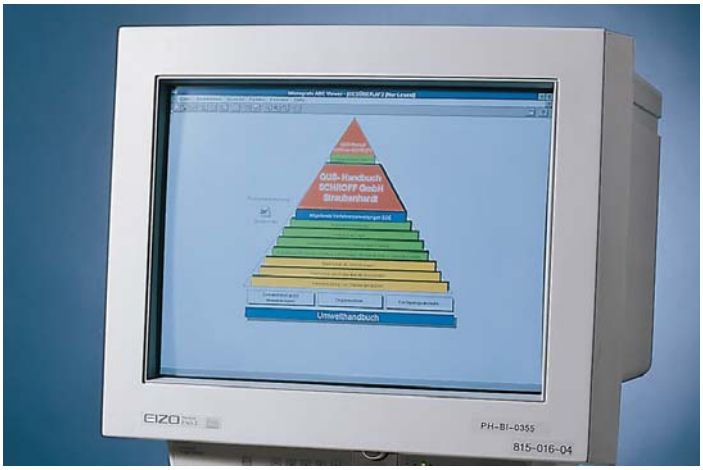

20398001

All Schroff and Pentair Equipment Protection production sites are accredited in accordance with DIN EN ISO 9001:2008.

The environmental management system of Schroff GmbH Germany, Schroff SAS France as well as Schroff UK Ltd. in Great Britain are additionally accredited in accordance with DIN EN ISO 14001:2004. Besides this, the security management system of Schroff GmbH is accredited in accordance with BS OSHAS 18001:2007.

Dynamic processes in all batch sizes

This necessitates an ingenious production system. Schroff consciously places its trust in personal commitment. "Cellular" production is integrated into the Schroff production process. Highly-competent and responsible employees work in small, clearly defined production cells.

Appendix

Certifications

Underwriters Laboratories
- Self-extinguishing plastics
- Type of protection NEMA 12

European Organisation for Nuclear Research
- europacPRO subracks approved to CERN Spec No. 385

Railway applications
- DB
  europacPRO for railway applications, approved for electronic equipment in rolling stock (BN 411003)
- SNCF
  (Société Nationale des Chemins de Fer)

TÜV Product Service
- 19” blower units
- 19” fans

Institute of German Electronics Engineers
- Protective GND/earthing connections
- Socket strips

European Union
EMC guideline 89/336/EWG
- VMEbus plug-in units
- Power supplies

VITA (VMEbus International Trade Association)
PICMG (PCI Industrial Computer Manufacturers Group)
- Systems
- Backplanes

Experience – to the benefit of the customer

There are many levels to Schroff's commitment which then lead to this "additional" benefit. For example, continuous dialogue with customers and suppliers throughout the world is integrated into design and production. Our involvement in international standardisation committees also ensures the up-to-date nature of the product standards or influences these in advance.
Added to this there is the experience of Schroff's Electronics division. This is where power supplies, backplanes and modular microcomputer systems are produced. We know what installing electronics means. We make use of this experience throughout the entire company. This is why all of the necessary tests are genuinely carried out under practical conditions.
For you as customer, this means:
Safety, reduced test times and therefore lower costs.

Quality also means dialogue

Dialogue with you, because our responsibility for quality is comprehensive and does not stop at the loading ramp.
You measure the value of our products. So please let us know if you are not satisfied with our services or products.
Of course, we would also be pleased to hear from you if you are satisfied.

An excerpt from the manual
"Quality-environment-safety management system":

The Schroff team's goal is to contribute towards the success of its customers with top products and service. All Schroff employees are responsible for the continuous improvement of the products and services.

National and international standardisation institutions

ANSI/EIA	USA	American National Standards Institute/ Electronic Industry Association
BSI	GB	British Standards Association
CENELEC	EU	European Committee for Electrotechnical Standardization
CSA	CAN	Canadian Standards Association
DIN	D	Deutsches Institut für Normung e.V. (German Standards Institute)
DKE	D	German Electrical Engineering Committee in DIN and VDE
ECL	GB	British Standards Institution Technical Subcommittee
EEMAC	CAN	Electrical/Electronic Manufacturers Association of Canada
ETSI	EU	European Telecommunications Standardisations Institute
IEC	Int.	International Electrotechnical Commission
IEEE	USA	Institute of Electrical and Electronics Engineers
NEMA	USA	National Electrical Manufacturers Association
NFPA	CAN	Electrical/Electronic Manufacturers Association of Canada
UL	USA	Underwriters Laboratories Inc.
VDE	D	Institute of German Electronics Engineers
VDI	D	Association of German Engineers

Appendix – Standards

Mechanical design

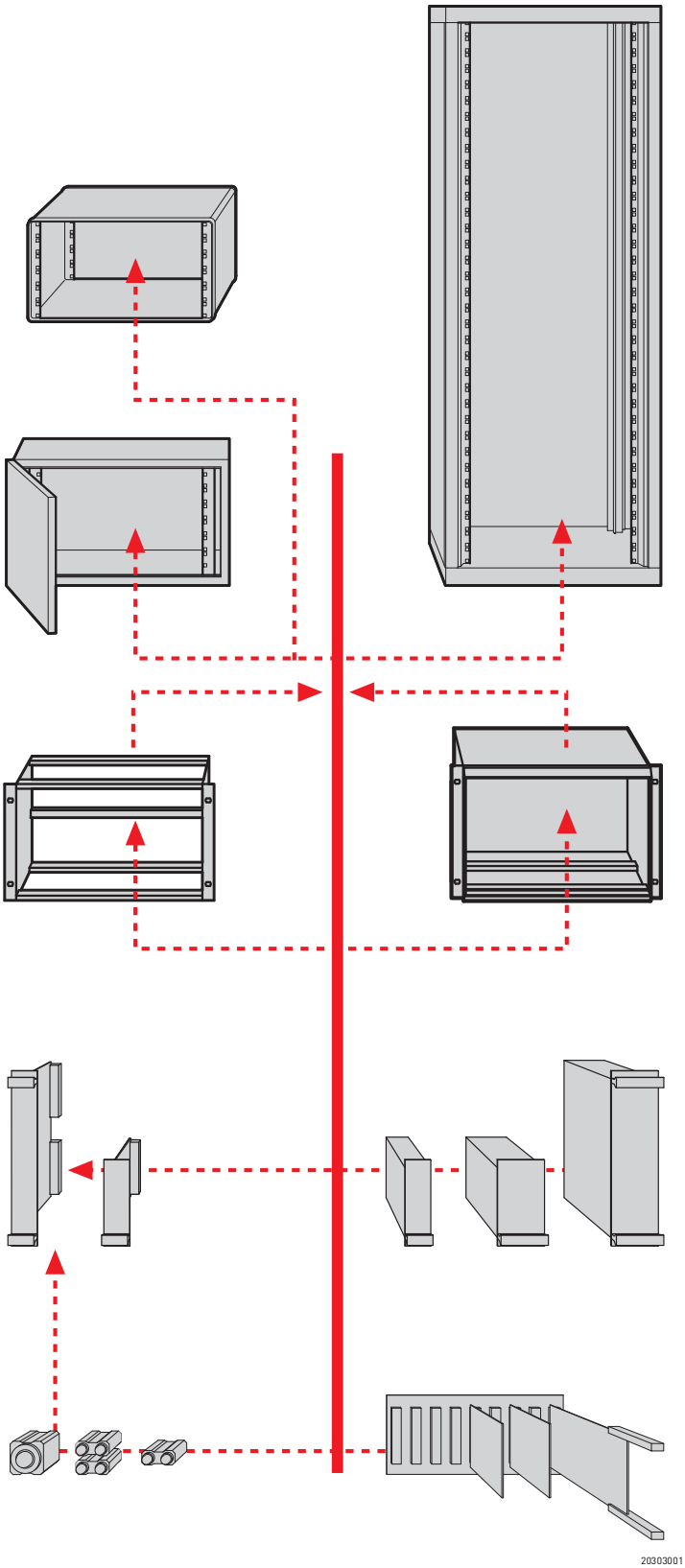

	19" system	25 mm system
Cabinets Cases	IEC 60297-3-100	IEC 60917-2-1
Subracks System enclosures	IEC 60297-3-100 IEC 60297-3-101 IEC 60297-3-102 IEC 60297-3-103 IEC 60297-3-104 IEEE 1101.1 IEEE 1101.10 IEEE 1101.11	IEC 60917-2-2
19" chassis	IEC 60297-3-105	-
Plug-in units Frame type plug-in units	IEC 60297-3-101 IEC 60297-3-102 IEC 60297-3-103 IEC 60297-3-104 IEEE 1101.1 IEEE 1101.10 IEEE 1101.11	IEC 60917-2-2
PCBs	IEC 60297-3-101 IEC 60297-3-104 IEEE 1101.1	IEC 60097
Connectors	IEC 60603-2	IEC 61076-4-101 IEC 61076-4-100
Front elements	DIN 41494 part 8	-
Backplanes	IEC 60297-3-101 IEC 60297-3-104 IEEE 1101.1 IEEE 1101.11	IEC 60917-2-2

Appendix – Standards

Shock and vibration test

EN 60068-2-6 (vibration, sinusoidal)
EN 60068-2-27 (shock)

These tests simulate conditions which devices must fulfil as minimum requirement during operation and transportation. Tests with 3, 6 and 9 U dummies provided valuable experiences that have been integrated into the design of the Schroff subracks. For extreme strains – such as e.g. during mobile use in rolling stock
– a separate product family "europac PRO for railway applications" has been developed and confirmed by approval testing to the German Railway Standards BN 411 002 and BN 411 003 and French Railway Standards NF F 61-005/NF F 60-002 as well as EN 50155.

DIN IEC 61587-1

Similar test conditions and degrees of severity for vibration and shock stability are contained in IEC 61587-1.
Varistar cabinets have been designed with high physical stresses in mind. Of particular importance in this respect is the bending stiffness of the frame. The specially developed hollow-chamber profile achieves the DL5 and DL6 requirement classes for static and dynamic loads, and thus also the highest shock and vibration resistance to IEC 61587-1, with minimal cost of material.

DIN IEC 61587-2

In dynamic tests for stability under earthquake conditions, the Varistar Heavy-Duty cabinet proved its suitability for worldwide use. The seismic tests, carried out under IEC 61587-2, certify the cabinet platform's earthquake resistance up to Bellcore Zone 3.
By further reinforcing the cabinet frame with small corner brackets, earthquake resistance is assured up to Bellcore Zone 4.

06109002

01008018

Appendix – Standards

IP degrees of protection

Types of protection (IP code):

IEC 60529
DIN VDE 0470 part 1

The degrees of protection of this standard define the

- Protection of persons against hazardous parts in the enclosure
- Protection against access of foreign bodies
- Protection against ingress of water

Protection against contact and access			
IP 1st digit	Contact	Foreign body	
0	no protection	no protection	
1	with large parts of the body (back of the hand)	large foreign bodies, diameter greater than or equal to 50 mm	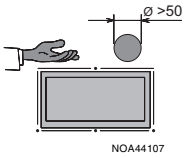 NOA44107
2	with the finger	medium-size foreign bodies, diameter greater than or equal to 12 mm	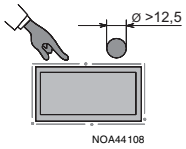 NOA44108
3	with tools and wires, diameter greater than or equal to 2.5 mm	small foreign bodies, diameter greater than or equal to 2.5 mm	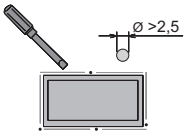 NOA44109
4	with tools and wires, diameter greater than or equal to 1 mm	grain-shaped foreign bodies, diameter greater than or equal to 1 mm	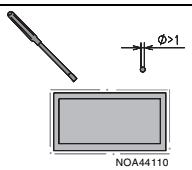 NOA44110
5	complete protection	dust deposit	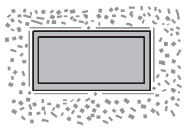 NOA44111
6	complete protection	ingress of dust	

Example: IP 21

The first digit means
Contact protection with the finger
and foreign bodies larger than 12.5 mm
in diameter.

The second digit means
The device is protected against vertically falling
drops of water.

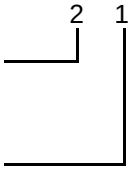

Protection against water		
IP 2nd digit		
0	no protection	
1	vertically falling drops of water	NOA44099
2	slantwise falling drops of water up to 15° against the vertical	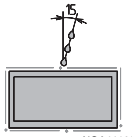 NOA44100
3	spraying water up to 60° angle against the vertical	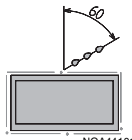 NOA44101
4	splash water from all sides	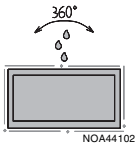 NOA44102
5	jets of water	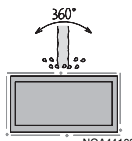 NOA44103
6	powerful jets of water	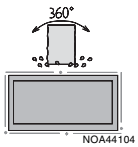 NOA44104
7	partial immersion	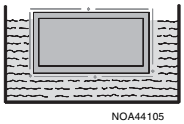 NOA44105
8	total immersion	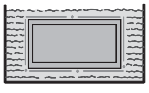 NOA44106

Appendix – Standards

Flammability of plastics

- Standardised test processes
- Classification in accordance with UL 94

Note

The specification of the UL listing of plastics on the order pages refers to the material used and not to the product

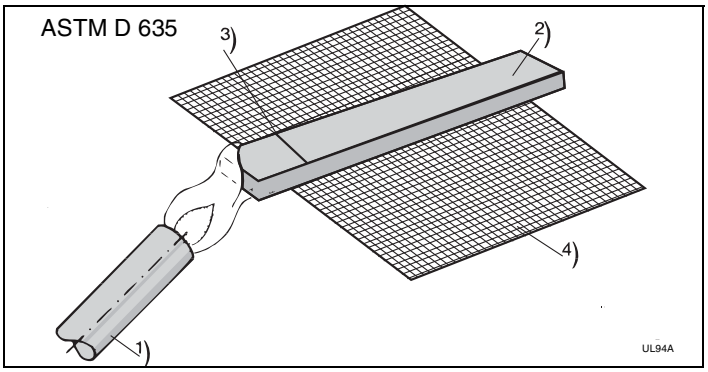

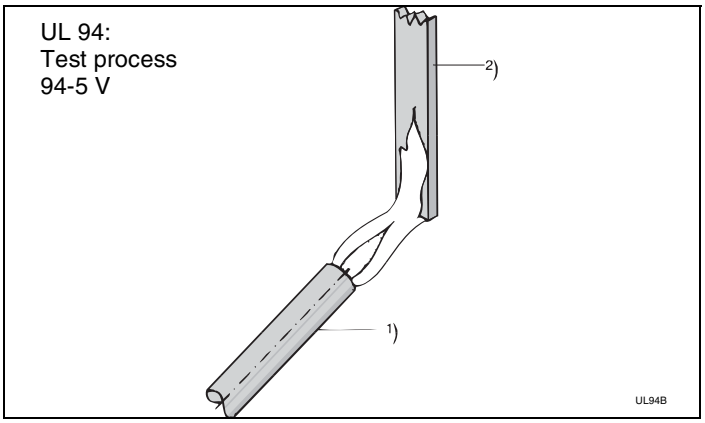

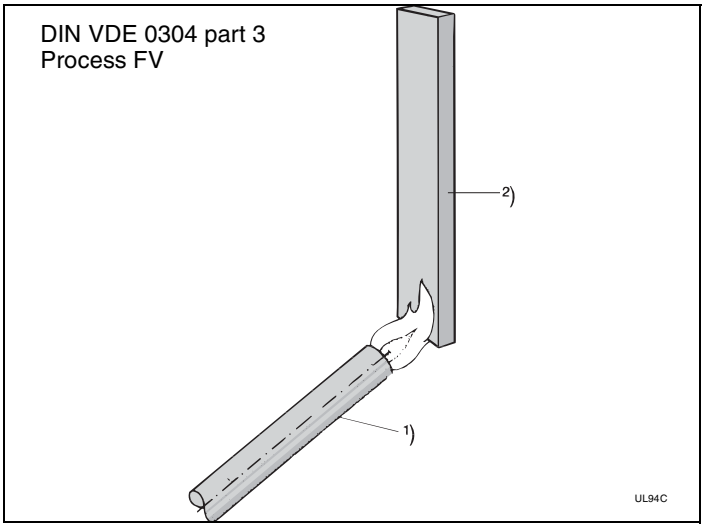

Criteria	Test structure
UL 94 HB	
■ Burn distance < 102 mm ■ Flame spread rate ≤ 38.1 mm with 3.2 mm thick sample body ≤ 76.2 mm with 1.6 mm thick sample body	■ Sample body horizontal ■ Bunsen burner flame at the free end ■ Flame height 25 mm ■ Ignition flame 30 s, partially FPCS burner position ■ 3 sample bodies 127 × 12.7 × 3.2 (1.6) mm
UL 94-5 V	
■ Afterflame time ≤ 60 s ■ No droplets	■ Sample body vertical ■ Bunsen burner flame at lower edge/corner ■ Flame height 127 mm ■ Inner flame cone 38 mm, touches lower edge/corner ■ 5 × 5 s flame application, pause every 5 s ■ 2 sets each containing 5 sample bodies 127 × 12.7 × (application thickness) mm
UL 94 V-0	
■ Burning time ≤10 s ■ Total burning time ≤50 s ■ No flaming droplets	■ Sample body vertical ■ Bunsen burner flame at the free end ■ Flame height 20 ± 2 mm ■ Ignition flame 10 s, after extinguishing of sample, a further 10 s ■ 10 sample bodies 125 × 13 × 3[1] mm
UL 94 V-1	
■ Burning time ≤30 s ■ Total burning time ≤ 250 s ■ No flaming droplets	[1] If necessary, also 0.8, 1.6, 6.0 and 6.4 mm
UL 94 V-2	
■ Burning time ≤ 30 s ■ Total burning time ≤ 250 s ■ Flaming droplets	

[1] Bunsen burner
[2] Sample body
[3] Measurement mark
[4] Wire screen

Appendix – Standards

① Protective GND/earthing connection from the frame to the covers

② Central connection with IEC 320 connector

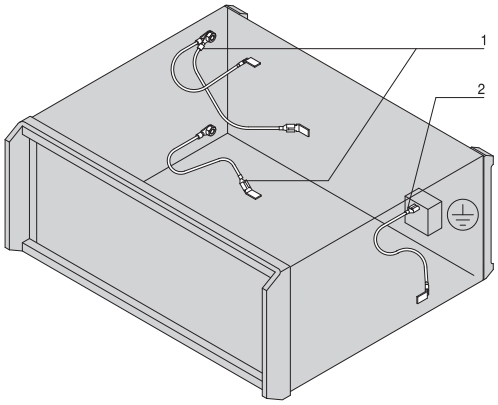

② Rear front panel chromated for surface contact to the enclosure

③ ESD spring in guide rail

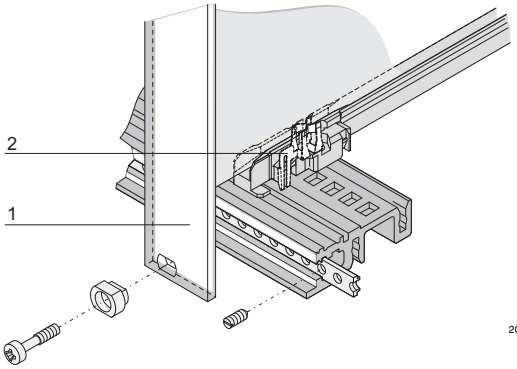

① Contact strip between frame and top cover

② Contact strip between plug-in units

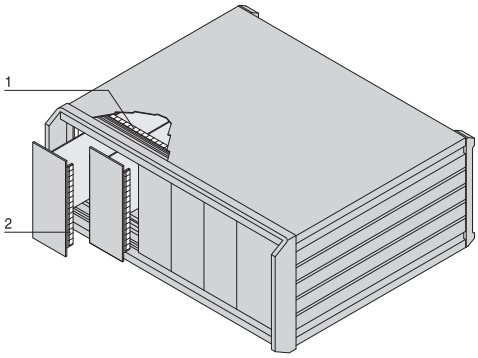

Protective GND/earthing connection

Measures to protect persons against contact with dangerous voltages.

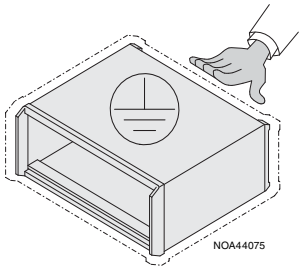

ESD

Electro**s**tatic **d**ischarge – measures to deflect electrostatic discharge in order to protect electronics against interference impulses and the destruction of components.

ESD or **e**lectro**s**tatic **d**ischarge describes the appearance form of the discharge of static electricity. The human being is electrically discharged onto an earthed point.

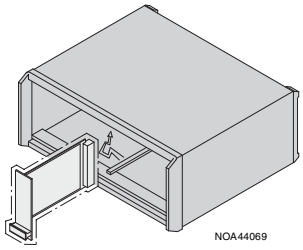

Under unfavourable conditions, human beings may carry a charge of up 20 kV. This voltage is discharged with a very rapid impulse.

EMV/EMC

The abbreviation of the definitions **EMV / EMC** stands for **E**lektro**m**agnetische **V**erträglichkeit or **e**lectro**m**agnetic **c**ompatibility.

These are defined as follows:

Electromagnetic compatibility is the ability of a piece of electrical equipment to function in a satisfactory manner in its electromagnetic environment, without influencing this environment, to which other pieces of equipment may also belong, more than is permissible.

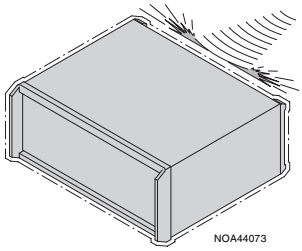

EMP

The generic term **EMP** or **e**lectro**m**agnetic **p**ulse incorporates three different forms of electromagnetic pulses.

These include:

- **LEMP: l**ightning **e**lectro**m**agnetic **p**ulse (e.g. lightning strike)
- **SEMP: s**witching **e**lectro**m**agnetic **p**ulse (e.g. switching processes in electrical energy systems)
- **NEMP: n**uclear **e**lectro**m**agnetic **p**ulse (nuclear explosion)

Appendix – Standards

The CE symbol

All electrical and electronic devices or systems marketed in the EU after 01.01.1996 must display the CE symbol.

30402051

However, the CE symbol is not a form of special EMC certification. It encompasses different standards for various products.

With the CE symbol, the manufacturer or importer confirms the conformity of his products to the EU standard.

However, responsibility for the declaration of conformity is borne by the manufacturer or importer, unlike, for example, in the case of the TÜV or GS symbol, where conformity is tested by a responsible body. The owner must therefore ensure that his device displays the CE symbol, and is only allowed to use this device in the specified environment, e.g. in industrial or domestic applications.

Important

The affixation of the CE symbol is the personal responsibility of each manufacturer. It is not assigned by an official body. The CE symbol only provides the consumer with indirect protection; it is predominantly affixed to the product for the official body monitoring the market.

Liability and responsibility

In the field of electromagnetic compatibility, the manufacturer certifies that his product is in accordance with the European EMC standard by affixing the CE symbol.

The guidelines are monitored by the (German) Federal Office of Postal and Telecommunication Services (BAPT). Adherence to the protection requirements is checked by random sampling.

In the event of non-adherence, the product may be withdrawn from the market and a high fine imposed. In addition to the EMC standard, the product liability legislation also applies in this case.

Shielded products (EMC)

Systems and devices which are used in Europe must adhere to the EMC standard regarding interference emission and interference resistance.

In case the pre-specified limit values are exceeded, a remedy may be provided by a shielded case. In this case, various measures are available for reducing interference emission or for improving interference resistance.

However, attention must also be paid to the special insertion of cables and wires into the case. Otherwise, the suppression characteristics of the enclosure cannot be guaranteed.

When testing a device or system with regard to electromagnetic compatibility, the interconnection between various standards must be taken into consideration. The basis of the EMC measurement is the Product Standard. If this does not exist, the valid Generic Standard must be applied.

Also to be considered for EMC measurements is the Basic Standard, to which reference is made in the individual Product and Generic Standards.

Shielded cases

Basically, no EMC standards apply to "empty" electronics enclosures, because only if corresponding electrical devices have been installed can the overall system emit electromagnetic interference or be influenced by external emissions.

Schroff system solutions

Schroff enclosure systems are manufactured entirely from metal, and basically have good EMC characteristics. The conductivity of surfaces in EMC shielded enclosures is additionally ensured by galvanic coating.

The individual components are contacted via a EMC gaskets, such as, for example, stainless steel springs, and large surface conductive connections of the individual components.

When designing shielded enclosures, special requirements are also made on cable ducting and ventilation. An complete shielded system can only be assessed if these two parameters are taken into account.

Shielding and measurement procedures

Shielding specifies the rate by which the intensity of electromagnetic radiation is reduced on passage through an enclosure. This is specified in the logarithmic measuring unit dB. Shielding measurements for Schroff enclosures are carried out by an independent institute.

Shielding is measured in accordance with the measurement procedure VG 95373, part 15 (German defence standard). This procedure is currently being transformed into a civilian standard.

An additional measurement procedure to MIL-STD 285 (American military standard) also exists. This procedure was principally developed for measuring material shielding, therefore it is only suitable to a limited degree for measuring electronics enclosures, such as cabinets, cases and subracks.

Appendix – Abbreviations

A	Ampere, electric current
ABS	Acrylonitrile-butadiene-styrene
AC	Alternating current (single phase current)
Acryl(-glas)	Plastic (glass)
AD	Address data bus
ADC	Automatic daisy chaining
Al	Aluminium
AlZn	Aluminium zinc alloy for finishes
ANSI	American National Standards Institute
AT	PC backplane AT standard
AdvancedTCA	Advanced Telecom Computing Architecture
Be	Beryllium
BN	(German) Federal Railway Standard
BS(I)	British Standards (Institution)
°C	Degree Celsius (= 1/1.8 × [°F-32] = K – 273.15 °C)
C 15	Steel
CE	Conformité Européenne, corresponds to EU guidelines
CENELEC	European Committee for Electrotechnical Standardisation
CERN	European Organisation for Nuclear Research
cfm	Cubic feet per minute (airflow capacity)
Ck 75	Steel
CSA	Canadian Standards Association
CTI	Comparative figure for creepage formation in insulating materials
Cu	Copper
CuBe	Copper-beryllium
CuSn	Bronze
CuZn	Brass
D, d	Depth
DB	Deutsche Bahn AG
dB(A)	Decibels, volume level
DC	Direct current
DIL	Dual-in-line
DIN	Deutsche Industrie Norm (German industry standard)
DKE	Deutsche Eletrotechnische Kommission im DIN und VDE (German electrotechnical commission)
ECL	British Standards Institution Technical Subcommittee
E-Cu	Electrolytic copper
EEMAC	Electrical/Electronic Manufacturers Association of Canada
Earthing contact	Socket/plug with protection contact; standard in D, NL, S, P, A, N, SF, E, TR, GR, L
EIA	Electronic Industry Association
EMC (EMV)	Electromagnetic compatibility
EMP	Electromagnetic pulse
EMI	Electromagnetic interference
EN	European standard
EPGC	Fiberglass reinforced epoxy
Epgl.	Epoxy-fiberglass mat
ESD	Electrostatic discharge
ESG	Tempered, single-glass pane to EN 12150
ETS(I)	European Telecommunications Standards (Institute)
EU	Filter classes to DIN 24 185, part 100
°F	Degree Fahrenheit (= 1.8 × °C + 32)
FI	Fault current
FKD	Lower/upper limit temperature and moisture to DIN 40 040
FPCS	Front panel component system
FR	Flammability rating (to NEMA)
G10Fr4	Fiberglass, fire-resistant
GD-Zn	Zinc die-cast
GND	Ground/earthing
GS	Approved safety
h	Hour
H, h	Height
H_2S	Hydrogen sulphide
HF	HF/high-frequency
HP	= TE = unit of division (1 HP = 5.08 mm)
HPL	High Pressure Laminate (melamine resin-coated laminated sheet)
HSF	Lower/upper limit temperature and moisture to DIN 40 037
Hz	Hertz, frequency of the alternating voltage
IC	Integrated Circuit
IEC	International Electrotechnical Commission
IEEE	Institute of Electrical and Electronic Engineers
Inch	Linear measure, 1" = 25.4 mm
IP	Ingress Protection
ISA	Industrial Standard Architecture (industrial standard for PCs)
ISO	International Standards Organisation
J1	VME system bus, 3 U, top
J1/J2	VME system bus, 6 U, Monolithic
J2	VME system bus, 6 U, bottom
K	Kelvin (= °C + 273,15 °C)
LBX	Local bus extension for Multibus® II
LED	Light emitting diode
lfm	Linear foot per minute; airflow 1 lfm = 304.8 mm/min = 5.08 mm/s = 0.00508 m/s
LGA	Bavarian regional trade office
M	Metric thread
m^3/h	Airflow volume
MBLT	Multiplexed block transfer in the VMEbus for increasing the transmission rate
mcd	Millicandela
MDC	Manual daisy chaining with jumper for VME/VXIbus
mep	Metric equipment practice
MHz	Megahertz (frequency)
mm	Millimeter
Monolithic	J1/J2 backplane, 6 U
mp1, mp2, mp3	Measuring units in metric system, 1 mp1 = 25 mm, 1 mp2 = 5 mm, 1 mp3 = 2.5 mm
ms	Millisecond
MTBF	Mean time between failure

Appendix – Abbreviations

n	Speed (rpm)
N	Newton
NEMA	National Electrical Manufacturers Association
NF	Norme Française (French standard)
NFPA	Electrical/Electronics Manufacturers Association of Canada
NTC	Negative temperature coefficient
OVP	Over-voltage protection
PA	Polyamide
Pa	Pascal
Pb	Lead
PBT (P)	Polybutylen terephthalat
PC	Personal computer or polycarbonate
PCI	Periphery component interface
PE	Polyethylene
PG	Steel conduit thread
PICMG	PCI Industrial Computers Manufacturers Group (www.PICMG.com)
Pin	Connection, contact
PMC	PCI Mezzanine Card
PMMA	Polymethyl methacrylat
POM	Polyoxymethylene
PP	Polypropylene
PPE	Polyphenylene ether
ppm	Parts per million
PPO	Polyphenyl oxide, corresponds to PPE
PS	Polystyrene
PSB	Parallel system bus for Multibus® II
PTC	Positive temperature coefficient
PU	Packaging unit
PU(R)	Polyurethane
Pv	Installed energy loss
PVC	Polyvinyl chloride
RAL	Colour standard
RAL 7016	Anthracite grey
RAL 7021	Black grey
RAL 7030	Stone grey
RAL 7032	Pebble grey
RAL 7035	Light grey
RAL 9005	Black
RAL 9006	White aluminum
Sekurit(-glas)	Safety glass
ServicePLUS	SCHROFF rapid assembly service
SEV	Association of Swiss electrical engineers
SI	Overcurrent
SIPS	Standard industrial PC system
Slot	Plug-in position for board
SMD	Surface mounted device
SNCF	Société Nationale des Chemins de Fer
SNMP	Simple network management protocol
Sn	Tin
SO_2	Sulphur dioxide
SPQ	Standard pack quantity
St	Steel
SU	System unit (1 SU = 25 mm)
SW	Wrench size across flats
T_a/T_u	Ambient temperature
TSG-PS	Thermoplastic structure foaming, polystyrene
TTL	Transistor-transistor logic
TÜV	German technical supervisory association
U	= HE = height unit (1 U = 44.45 mm)
UL	Underwriters Laboratories Inc. (USA safety regulations)
UL 94 ...	American fire protection standard
UL 60950-1	Safety of information technology appliances including electrical office equipment
UNC	Unified National Coarse (inch thread)
UTE	Union technique de l'électricité, here: socket/ socket strip type for France and Belgium
$\mathring{V}$	Airflow capacity
V	Volt, voltage
VA	Volt-ampere, power consumption, (apparent power)
VDE	Institute of German electronics engineers
VDI	Verein Deutscher Ingenieure e.V.
VG Standard	Defence equipment (standard)
VITA	VMEbus International Trade Association (www.vita.com)
VMEbus	Versa Module Europe, system bus
VSB	VME subsystem bus
V_{ss}	Peak-peak voltage
VXI	VMEbus extension for instrumentation
V2A	Stainless steel
W	Watt, power output
W, w	Width
Zincor	Pre-galvanised steel plate with special surface treatment
Zn	Zinc
ZnPb	Zinc-leaded alloy

Appendix

Part no.	Page
10117-498	1.356
10117-527	1.277
10117-528	1.277
10117-529	1.277
10117-530	1.277
10117-531	1.277
10117-532	1.277
10117-533	1.276
10117-534	1.276
10117-535	1.276
10117-536	1.276
10117-537	1.276
10117-538	1.276
10117-539	1.276
10117-540	1.276
10117-541	1.277
10117-542	1.277
10117-543	1.277
10117-544	1.277
10117-545	1.277
10117-546	1.277
10117-547	1.277
10117-548	1.277
10125-010	1.348
10125-011	1.348
10130-001	1.12
10130-002	1.12
10130-003	1.12
10130-004	1.12
10130-005	1.13
10130-006	1.13
10130-007	1.13
10130-008	1.13
10130-012	1.228
10130-013	1.229
10130-014	1.230
10130-016	1.228
10130-017	1.229
10130-018	1.230
10130-020	1.56
10130-021	1.14
10130-022	1.14
10130-023	1.86
10130-024	1.127
10130-025	1.127
10130-026	1.127
10130-027	1.127
10130-028	1.127
10130-029	1.127
10130-030	1.127
10130-031	1.127
10130-032	1.127
10130-033	1.127
10130-034	1.127
10130-035	1.127
10130-036	1.127
10130-037	1.127
10130-038	1.127
10130-039	1.127
10130-040	1.127
10130-041	1.127
10130-042	1.127
10130-043	1.127
10130-044	1.127
10130-045	1.127
10130-046	1.127
10130-047	1.127
10130-048	1.127
10130-049	1.127
10130-050	1.127
10130-051	1.127
10130-052	1.127
10130-053	1.127
10130-054	1.127
10130-055	1.127
10130-056	1.127
10130-057	1.127
10130-058	1.127
10130-059	1.127
10130-060	1.127
10130-061	1.127
10130-062	1.127
10130-063	1.127
10130-064	1.127
10130-065	1.127
10130-066	1.127
10130-067	1.127
10130-068	1.127
10130-069	1.127
10130-070	1.127
10130-071	1.127
10130-072	1.129
10130-073	1.129
10130-074	1.129
10130-075	1.129
10130-076	1.129
10130-077	1.129
10130-078	1.129
10130-079	1.129
10130-080	1.129
10130-081	1.129
10130-082	1.129
10130-083	1.129
10130-084	1.129
10130-085	1.129
10130-086	1.129
10130-087	1.129
10130-088	1.129
10130-089	1.129
10130-090	1.129
10130-091	1.129
10130-092	1.129
10130-093	1.129
10130-094	1.129
10130-095	1.129
10130-096	1.129
10130-097	1.129
10130-098	1.129
10130-099	1.129
10130-100	1.129
10130-101	1.129
10130-102	1.129
10130-103	1.129
10130-104	1.129
10130-105	1.129
10130-106	1.129
10130-107	1.129
10130-108	1.129
10130-109	1.129
10130-110	1.129
10130-111	1.129
10130-112	1.129
10130-113	1.129
10130-114	1.129
10130-115	1.129
10130-116	1.129
10130-117	1.129
10130-118	1.129
10130-119	1.129
10130-120	1.131
10130-121	1.131
10130-122	1.131
10130-123	1.131
10130-124	1.131
10130-125	1.131
10130-126	1.131
10130-127	1.131
10130-128	1.131
10130-129	1.131
10130-130	1.131
10130-131	1.131
10130-132	1.131
10130-133	1.131
10130-134	1.131
10130-135	1.131
10130-136	1.131
10130-137	1.131
10130-138	1.131
10130-139	1.131
10130-140	1.131
10130-141	1.131
10130-142	1.131
10130-143	1.131
10130-144	1.131
10130-145	1.131
10130-146	1.131
10130-147	1.131
10130-148	1.131
10130-149	1.131
10130-150	1.131
10130-151	1.131
10130-152	1.131
10130-153	1.131
10130-154	1.131
10130-155	1.131
10130-156	1.131
10130-157	1.131
10130-158	1.131
10130-159	1.131
10130-160	1.131
10130-161	1.131
10130-162	1.131
10130-163	1.131
10130-164	1.131
10130-165	1.131
10130-166	1.131
10130-167	1.131
10130-168	1.131
10130-169	1.131
10130-170	1.131
10130-171	1.131
10130-172	1.131
10130-173	1.131
10130-174	1.131
10130-175	1.131
10130-176	1.131
10130-177	1.131
10130-178	1.131
10130-179	1.131
10130-180	1.131
10130-181	1.131
10130-182	1.131
10130-183	1.131
10130-184	1.131
10130-185	1.131
10130-186	1.131
10130-187	1.131
10130-188	1.86
10130-189	1.86
10130-190	1.57
10130-191	1.58
10130-192	1.56
10130-193	1.238
10130-194	1.238
10130-195	1.87
10130-198	1.122
10130-199	1.232
10130-200	1.232
10130-201	1.122
10149-305	1.326

Appendix

Part no.	Page
10149-306	1.326
10149-308	1.326
10149-313	1.327
10149-315	1.327
10149-316	1.327
10225-601	5.102
10225-602	5.102
10225-604	5.103
10225-612	5.102
10225-613	5.102
10225-615	5.103
10225-616	5.103
10225-618	5.103
10225-623	5.102
10225-624	5.102
10225-626	5.103
10225-627	5.103
10225-629	5.103
10225-637	5.103
10225-638	5.103
10225-640	5.103
10225-667	5.104
10225-670	5.104
10225-682	5.104
10225-685	5.104
10225-693	5.104
10225-696	5.104
10236-151	2.26
10236-152	2.26
10236-156	2.26
10236-157	2.26
10236-160	2.26
10236-161	2.26
10236-162	2.26
10236-165	2.26
10236-166	2.26
10238-151	2.32
10238-152	2.32
10238-153	2.32
10501-001	5.108
10501-002	5.108
10501-003	5.108
10501-004	3.3
10501-004	5.109
10501-005	3.3
10501-005	5.109
10501-005	6.25
10501-006	3.3
10501-006	5.109
10501-007	3.3
10501-007	5.109
10501-008	3.3
10501-008	5.109
10501-008	6.25
10501-016	5.109
10501-018	5.109
10501-018	6.25
10501-025	3.3
10501-025	5.109
10501-026	3.3
10501-026	5.109
10501-026	6.25
10501-027	3.3
10501-027	5.109
10501-028	3.3
10501-028	5.109
10501-029	3.3
10501-029	5.109
10501-029	6.25
10501-116	3.3
10501-116	5.109
10502-050	5.110
10502-057	3.3
10502-057	5.110
10502-057	6.25
10502-059	3.3
10502-059	5.110
10502-060	6.25
10502-063	3.3
10502-063	5.110
10502-065	3.3
10502-065	5.110
10502-065	6.25
10502-296	5.112
10502-297	5.112
10504-002	5.111
10504-003	5.111
10505-014	5.113
10603-001	5.107
10603-001	5.117
10603-001	5.72
10603-001	5.87
10603-002	5.107
10603-002	5.117
10603-002	5.72
10603-002	5.87
10603-023	5.116
10603-024	5.116
10603-025	5.116
10603-026	5.116
10713-098	4.8
10713-099	4.8
10713-100	4.6
10713-102	4.6
10713-103	4.6
10713-104	4.6
10713-106	4.6
10713-107	4.6
10713-108	4.7
10713-110	4.7
10713-111	4.7
10713-112	4.7
10713-114	4.7
10713-115	4.7
10713-140	4.15
10713-141	4.15
10713-142	4.15
10713-143	4.15
10713-144	4.15
10713-145	4.15
10713-146	4.15
10713-147	4.15
10713-148	4.15
10713-149	4.15
10713-150	4.15
10713-151	4.15
10713-518	4.10
10713-520	4.10
10713-526	4.10
10713-528	4.10
10713-529	4.10
10713-530	4.11
10713-532	4.11
10713-534	4.10
10713-536	4.10
10713-537	4.10
10713-546	4.12
10713-547	4.12
10822-009	3.13
10822-009	3.46
10828-051	6.130
10828-052	6.130
10828-053	6.130
10828-054	6.130
10828-056	6.130
10828-057	6.130
10828-058	6.130
10828-059	6.130
10828-068	6.130
10828-069	6.130
10828-071	6.130
10828-072	6.130
10828-073	6.130
10836-045	8.102
10836-050	8.101
10836-060	8.103
10849-001	8.28
10849-002	8.29
10849-005	8.45
10849-009	8.32
10849-011	8.33
11000-001	9.17
11000-002	6.91
11000-002	7.96
11000-002	9.17
11098-140	9.21
11098-207	9.25
11098-212	9.25
11098-231	9.21
11098-266	9.21
11098-267	9.21
11098-316	9.24
11098-392	8.40
11098-392	8.51
11098-392	9.18
11098-416	8.40
11098-416	8.51
11098-416	9.18
11098-438	8.38
11098-438	8.39
11098-438	8.52
11098-438	9.19
11249-003	1.322
11249-005	1.322
11249-007	1.323
11249-009	1.323
11249-012	1.323
11249-016	1.324
1130-583	1.204
11592-500	8.9
11592-503	8.9
11596-088	8.4
11596-090	8.5
11596-107	8.5
11596-160	8.6
11596-161	8.6
11596-300	8.7
11596-303	8.7
11850-011	8.43
11850-013	8.47
11850-017	8.42
11850-018	8.44
11850-020	8.40
11850-021	8.38
11890-035	8.39
11990-100	8.10
11990-101	8.10
11990-600	8.8
11990-601	8.8
11990-603	8.8
12349-001	1.318
12349-002	1.318
12349-003	1.318
12349-004	1.318
12349-005	1.320
12349-006	1.320
12349-007	1.320
12349-008	1.320
12349-009	1.318
12349-010	1.318

Appendix

Part no.	Page
12349-011	1.318
12349-012	1.318
12403-150	2.23
12403-151	2.23
12403-152	2.23
12403-153	2.23
12403-154	2.23
12403-155	2.23
12403-156	2.23
12405-120	2.10
12405-120	2.11
12405-120	2.13
12406-400	2.4
12406-400	2.5
12406-411	2.6
12406-411	2.7
12406-418	2.6
12406-418	2.7
12406-419	2.6
12406-419	2.7
12406-450	2.7
12406-451	2.7
12406-452	2.7
12406-454	2.7
12406-730	2.6
12406-801	2.6
12406-802	2.6
12406-810	2.6
12406-812	2.6
12406-813	2.6
12406-814	2.6
12406-815	2.6
12406-816	2.6
12406-818	2.6
12406-819	2.6
12406-821	2.6
12505-001	2.10
12505-002	2.10
12505-003	2.10
12505-004	2.10
12505-005	2.10
12505-020	2.10
12505-021	2.10
12505-022	2.10
12505-023	2.10
12505-024	2.10
12505-025	2.10
12505-028	2.10
12505-029	2.10
12505-032	2.10
12505-071	2.11
12505-073	2.11
12505-074	2.11
12505-081	2.11
12505-083	2.11
12505-084	2.11
12505-085	2.11
12505-086	2.11
12506-003	2.4
12506-004	2.4
12506-005	2.4
12506-010	2.4
12506-011	2.4
12506-012	2.4
12506-013	2.4
12506-014	2.4
12506-015	2.4
12506-017	2.4
12506-018	2.4
12506-019	2.4
12506-020	2.4
12506-022	2.4
12506-030	2.4
12506-031	2.4
12506-032	2.4
12506-033	2.4
12506-041	2.4
12506-054	2.4
12506-055	2.4
12506-160	2.5
12506-161	2.5
12506-162	2.5
12506-163	2.5
12506-164	2.5
12506-165	2.5
12506-166	2.5
12506-167	2.5
12506-168	2.5
12506-169	2.5
12506-170	2.5
12506-171	2.5
12506-172	2.5
12506-173	2.5
12506-174	2.5
12506-175	2.5
12506-176	2.5
12506-177	2.5
13100-041	9.3
13100-043	9.3
13100-044	9.3
13100-045	9.3
13100-046	9.3
13100-078	9.9
13100-079	9.9
13100-102	9.4
13100-103	9.4
13100-104	9.4
13100-105	9.4
13100-112	9.7
13100-114	9.7
13100-115	9.7
13100-116	9.7
13100-122	9.8
13100-123	9.8
13100-133	9.5
13100-134	9.5
13100-136	9.2
13100-137	9.2
13100-138	9.2
13100-139	9.2
13100-141	8.102
13100-141	8.103
13100-141	8.77
13100-141	8.86
13100-141	8.87
13100-141	8.96
13100-141	9.22
13100-142	9.26
13100-145	9.23
13100-146	9.27
13100-150	9.6
13100-151	9.6
13100-152	9.6
13100-153	9.6
13100-203	9.20
13100-204	9.20
13100-205	9.20
13103-002	9.13
13103-003	9.13
13103-004	9.13
13103-007	9.13
13103-007	9.14
13103-016	9.15
13105-001	9.10
13105-002	9.10
13105-003	9.10
13105-004	9.10
13105-006	9.10
13105-007	9.10
13105-008	9.10
13105-009	9.10
13105-011	9.10
13105-012	9.10
13105-013	9.10
13105-014	9.10
13105-017	9.11
13105-018	9.11
13105-021	9.11
13105-022	9.11
13105-023	9.11
13105-027	9.11
13105-028	9.11
13105-029	9.11
13105-051	9.12
13105-052	9.12
13105-053	9.12
14575-023	5.79
14575-025	5.79
14575-027	5.79
14575-063	5.79
14575-065	5.79
14575-067	5.79
14575-103	5.79
14575-105	5.79
14575-114	5.78
14575-115	5.78
14575-123	5.79
14575-125	5.79
14575-127	5.79
14575-134	5.78
14575-135	5.78
14575-136	5.78
14575-143	5.79
14575-145	5.79
14575-147	5.79
14575-154	5.78
14575-155	5.78
14575-156	5.78
14575-163	5.79
14575-165	5.79
14575-167	5.79
14575-169	5.79
14575-171	5.79
14575-174	5.78
14575-175	5.78
14575-176	5.78
14575-178	5.78
14575-223	5.79
14575-225	5.79
14575-243	5.79
14575-245	5.79
14575-247	5.79
14575-265	5.79
14575-267	5.79
14575-269	5.79
14575-271	5.79
14575-445	5.80
14575-447	5.80
14575-463	5.80
14575-465	5.80
14575-467	5.80
14575-469	5.80
14575-471	5.80
14575-476	5.78
14575-477	5.78
14576-021	5.50
14576-023	5.50
14576-041	5.50
14576-043	5.50
14576-045	5.50

Appendix

Part no.	Page	Part no.	Page	Part no.	Page	Part no.	Page	Part no.	Page
14576-101	5.50	**15230-009**	1.245	**19713-540**	4.10	**20110-073**	6.126	**20110-197**	3.28
14576-103	5.50	**15230-010**	1.245	**20100-006**	3.40	**20110-074**	3.27	**20110-198**	3.28
14576-121	5.50	**15230-011**	1.245	**20100-007**	3.40	**20110-074**	6.126	**20114-728**	1.150
14576-123	5.50	**15230-012**	1.245	**20100-008**	3.40	**20110-075**	3.27	**20114-728**	1.151
14576-125	5.50	**15230-013**	1.245	**20100-009**	3.41	**20110-075**	6.126	**20114-728**	1.153
14576-141	5.50	**15230-014**	1.245	**20100-010**	3.40	**20110-076**	3.27	**20114-728**	1.154
14576-143	5.50	**15230-015**	1.245	**20100-013**	3.41	**20110-076**	6.126	**20114-728**	1.24
14576-145	5.50	**15230-016**	1.245	**20100-015**	3.39	**20110-077**	3.27	**20114-728**	1.25
14576-161	5.50	**15230-017**	1.245	**20100-017**	3.39	**20110-077**	6.126	**20114-728**	1.283
14576-163	5.50	**15230-018**	1.245	**20100-018**	3.39	**20110-090**	3.25	**20114-728**	1.66
14576-165	5.50	**15230-019**	1.244	**20100-019**	3.39	**20110-090**	6.125	**20114-728**	1.67
14576-167	5.50	**15230-020**	1.244	**20100-021**	3.42	**20110-091**	3.25	**20114-728**	1.93
14576-169	5.50	**15230-021**	1.244	**20100-028**	3.41	**20110-091**	6.125	**20114-728**	1.94
14576-221	5.51	**15230-022**	1.244	**20100-029**	3.39	**20110-092**	3.25	**20114-728**	2.26
14576-223	5.51	**15230-023**	1.244	**20100-029**	3.41	**20110-092**	6.125	**20114-728**	2.31
14576-241	5.51	**15230-024**	1.244	**20100-030**	3.41	**20110-093**	3.25	**20114-729**	1.150
14576-243	5.51	**15230-025**	1.244	**20110-054**	3.13	**20110-093**	6.125	**20114-729**	1.151
14576-245	5.51	**16230-001**	1.245	**20110-055**	3.13	**20110-094**	3.25	**20114-729**	1.153
14576-247	5.51	**16230-002**	1.245	**20110-056**	3.13	**20110-094**	6.125	**20114-729**	1.154
14576-265	5.51	**16230-003**	1.245	**20110-060**	3.13	**20110-095**	3.25	**20114-729**	1.24
14576-267	5.51	**16230-004**	1.245	**20110-061**	3.13	**20110-095**	6.125	**20114-729**	1.25
14576-269	5.51	**16230-005**	1.245	**20110-062**	3.13	**20110-096**	3.25	**20114-729**	1.283
14576-463	5.51	**16230-006**	1.245	**20110-063**	3.13	**20110-096**	6.125	**20114-729**	1.66
14576-465	5.51	**16230-007**	1.245	**20110-068**	3.52	**20110-097**	3.25	**20114-729**	1.67
14576-467	5.51	**16230-008**	1.245	**20110-068**	3.53	**20110-097**	6.125	**20114-729**	1.93
14576-469	5.51	**16230-009**	1.245	**20110-068**	3.54	**20110-100**	3.26	**20114-729**	1.94
14577-123	5.52	**16230-010**	1.245	**20110-068**	3.55	**20110-101**	3.26	**20114-730**	1.150
14577-125	5.52	**16230-011**	1.245	**20110-068**	3.56	**20110-102**	3.26	**20114-730**	1.151
14577-143	5.52	**16230-012**	1.245	**20110-068**	3.57	**20110-103**	3.26	**20114-730**	1.153
14577-145	5.52	**16230-013**	1.245	**20110-068**	3.58	**20110-104**	3.26	**20114-730**	1.154
14577-163	5.52	**16230-014**	1.245	**20110-068**	3.59	**20110-105**	3.26	**20114-730**	1.24
14577-165	5.52	**16230-015**	1.245	**20110-068**	3.60	**20110-106**	3.26	**20114-730**	1.25
14577-223	5.52	**16230-016**	1.245	**20110-068**	3.61	**20110-107**	3.26	**20114-730**	1.283
14577-243	5.52	**16230-017**	1.245	**20110-068**	3.62	**20110-108**	3.26	**20114-730**	1.66
14577-245	5.52	**16230-018**	1.245	**20110-068**	3.63	**20110-180**	3.13	**20114-730**	1.67
14577-265	5.52	**16230-019**	1.244	**20110-068**	3.64	**20110-181**	3.13	**20114-730**	1.93
15230-001	1.245	**16230-020**	1.244	**20110-068**	3.66	**20110-182**	3.13	**20114-730**	1.94
15230-002	1.245	**16230-021**	1.244	**20110-068**	3.67	**20110-190**	3.28	**20114-731**	1.117
15230-003	1.245	**16230-022**	1.244	**20110-068**	3.68	**20110-191**	3.28	**20114-731**	1.150
15230-004	1.245	**16230-023**	1.244	**20110-071**	3.27	**20110-192**	3.28	**20114-731**	1.151
15230-005	1.245	**16230-024**	1.244	**20110-071**	6.126	**20110-193**	3.28	**20114-731**	1.153
15230-006	1.245	**16230-025**	1.244	**20110-072**	3.27	**20110-194**	3.28	**20114-731**	1.154
15230-007	1.245	**19713-006**	4.8	**20110-072**	6.126	**20110-195**	3.28	**20114-731**	1.176
15230-008	1.245	**19713-121**	4.8	**20110-073**	3.27	**20110-196**	3.28	**20114-731**	1.198

Appendix

Part no.	Page
20114-731	1.24
20114-731	1.25
20114-731	1.283
20114-731	1.52
20114-731	1.66
20114-731	1.67
20114-731	1.83
20114-731	1.93
20114-731	1.94
20117-024	1.276
20117-024	1.277
20117-024	1.290
20117-024	1.302
20117-080	1.276
20117-080	1.277
20117-080	1.294
20117-080	1.306
20117-156	1.290
20117-503	1.281
20117-503	1.296
20117-503	1.308
20117-515	1.302
20117-744	1.278
20117-745	1.278
20117-745	1.291
20117-745	1.303
20117-746	1.278
20117-746	1.291
20117-746	1.303
20117-747	1.278
20117-747	1.291
20117-747	1.303
20117-748	1.278
20117-748	1.291
20117-748	1.303
20117-749	1.278
20117-749	1.291
20117-749	1.303
20117-751	1.278
20117-751	1.291
20117-751	1.303
20117-752	1.278
20117-752	1.291
20117-752	1.303
20117-753	1.303
20117-754	1.303
20117-756	1.303
20117-757	1.276
20117-757	1.277
20117-757	1.290
20117-757	1.302
20117-765	1.279
20117-765	1.292
20117-765	1.304
20117-766	1.279
20117-766	1.292
20117-766	1.304
20117-767	1.279
20117-767	1.292
20117-767	1.304
20117-768	1.279
20117-768	1.292
20117-768	1.304
20117-769	1.279
20117-770	1.279
20117-770	1.292
20117-770	1.304
20117-771	1.279
20117-771	1.292
20117-771	1.304
20117-772	1.279
20117-772	1.292
20117-772	1.304
20117-775	1.304
20117-776	1.304
20117-777	1.304
20118-030	3.36
20118-265	3.37
20118-266	3.37
20118-280	3.35
20118-281	3.37
20118-282	3.37
20118-339	1.283
20118-339	1.359
20118-340	1.283
20118-340	1.359
20118-351	1.118
20118-351	1.154
20118-351	1.177
20118-351	1.199
20118-351	1.25
20118-351	1.253
20118-351	1.269
20118-351	1.287
20118-351	1.53
20118-351	1.67
20118-351	1.83
20118-351	1.95
20118-351	2.26
20118-351	2.31
20118-351	2.32
20118-351	2.42
20118-351	3.20
20118-351	3.21
20118-352	1.154
20118-352	1.25
20118-352	1.253
20118-352	1.287
20118-352	1.67
20118-352	1.95
20118-352	3.20
20118-353	1.154
20118-353	1.25
20118-353	1.253
20118-353	1.287
20118-353	1.67
20118-353	1.95
20118-353	3.20
20118-364	3.37
20118-365	3.37
20118-366	3.37
20118-390	1.247
20118-390	1.262
20118-391	1.247
20118-391	1.262
20118-460	1.358
20118-461	1.359
20118-462	1.357
20118-536	3.35
20118-537	3.36
20118-538	3.34
20118-554	1.283
20118-554	1.359
20118-590	3.37
20118-591	3.37
20118-592	1.284
20118-592	1.298
20118-592	1.311
20118-593	1.284
20118-593	1.298
20118-593	1.311
20118-624	1.118
20118-624	1.154
20118-624	1.177
20118-624	1.199
20118-624	1.25
20118-624	1.253
20118-624	1.269
20118-624	1.287
20118-624	1.53
20118-624	1.67
20118-624	1.83
20118-624	1.95
20118-624	2.31
20118-624	3.20
20118-630	3.16
20118-631	3.16
20118-686	1.351
20118-706	3.21
20118-713	2.34
20118-714	2.34
20118-715	2.34
20118-716	2.33
20118-717	2.34
20118-719	2.44
20118-729	3.21
20118-734	1.343
20118-734	3.8
20118-736	1.343
20118-736	3.8
20118-738	3.32
20118-740	3.20
20118-741	1.357
20118-742	1.357
20118-743	1.357
20118-744	1.358
20118-745	1.358
20118-746	3.29
20118-747	3.30
20118-748	3.31
20118-749	3.31
20118-750	1.133
20118-750	1.166
20118-750	1.188
20118-750	1.238
20118-750	1.265
20118-750	1.294
20118-750	1.295
20118-750	1.306
20118-750	1.307
20118-750	1.34
20118-750	1.35
20118-750	1.72
20118-750	2.27
20118-753	3.29
20118-753	3.30
20118-753	3.31
20118-753	3.32
20118-757	1.343
20118-757	3.8
20118-758	1.343
20118-758	3.8
20118-759	1.343
20118-759	3.8
20118-760	1.343
20118-760	3.8
20118-761	1.342
20118-761	3.7
20118-762	1.342
20118-762	3.7
20118-767	1.343
20118-767	3.8
20118-768	1.343
20118-768	3.8
20118-775	1.150
20118-775	1.151
20118-775	1.153
20118-775	1.154
20118-775	1.24
20118-775	1.25

Appendix

Part no.	Page
20118-775	1.283
20118-775	1.66
20118-775	1.67
20118-775	1.93
20118-775	1.94
20118-776	1.150
20118-776	1.151
20118-776	1.153
20118-776	1.154
20118-776	1.24
20118-776	1.25
20118-776	1.283
20118-776	1.66
20118-776	1.67
20118-776	1.93
20118-776	1.94
20118-777	1.150
20118-777	1.151
20118-777	1.153
20118-777	1.154
20118-777	1.24
20118-777	1.25
20118-777	1.283
20118-777	1.66
20118-777	1.67
20118-777	1.93
20118-777	1.94
20118-778	1.150
20118-778	1.151
20118-778	1.153
20118-778	1.154
20118-778	1.24
20118-778	1.25
20118-778	1.283
20118-778	1.66
20118-778	1.67
20118-778	1.93
20118-778	1.94
20118-781	1.345
20118-781	1.360
20118-781	3.11
20118-782	1.345
20118-782	3.11
20118-783	1.345
20118-783	1.360
20118-783	2.29
20118-783	3.11
20118-784	1.345
20118-784	3.11
20118-785	1.345
20118-785	1.360
20118-785	2.29
20118-785	3.11
20118-786	1.345
20118-786	3.11
20118-787	1.345
20118-787	3.11
20118-788	1.345
20118-788	3.11
20118-789	1.345
20118-789	1.360
20118-789	2.29
20118-789	3.11
20118-790	1.345
20118-790	1.360
20118-790	2.29
20118-790	3.11
20118-791	1.345
20118-791	1.360
20118-791	3.11
20118-796	1.247
20118-796	1.262
20118-796	1.279
20118-796	1.293
20118-796	1.305
20118-797	1.247
20118-797	1.262
20118-797	1.279
20118-797	1.293
20118-797	1.305
20119-080	1.361
20119-106	1.361
20119-159	7.11
20119-160	7.11
20119-161	7.11
20119-162	7.11
20119-163	7.11
20119-257	1.344
20119-257	1.361
20119-354	3.34
20119-355	3.34
20119-356	3.34
20119-357	3.34
20119-358	3.34
20125-005	1.350
20125-006	1.349
20125-018	1.351
20125-021	1.349
20130-001	1.158
20130-001	1.180
20130-002	1.158
20130-002	1.180
20130-003	1.158
20130-003	1.180
20130-004	1.158
20130-004	1.180
20130-005	1.158
20130-005	1.180
20130-005	1.28
20130-005	1.40
20130-005	1.70
20130-006	1.158
20130-006	1.180
20130-006	1.28
20130-006	1.40
20130-006	1.70
20130-007	1.158
20130-007	1.180
20130-008	1.158
20130-008	1.180
20130-009	1.28
20130-009	1.40
20130-009	1.70
20130-010	1.28
20130-010	1.40
20130-010	1.70
20130-013	1.158
20130-013	1.180
20130-013	1.28
20130-013	1.40
20130-013	1.70
20130-014	1.158
20130-014	1.180
20130-014	1.28
20130-014	1.40
20130-014	1.70
20130-015	1.158
20130-015	1.180
20130-015	1.28
20130-015	1.40
20130-015	1.70
20130-016	1.158
20130-016	1.180
20130-017	1.28
20130-017	1.40
20130-018	1.158
20130-018	1.180
20130-018	1.28
20130-018	1.40
20130-018	1.70
20130-019	1.158
20130-019	1.180
20130-019	1.28
20130-019	1.40
20130-019	1.70
20130-020	1.158
20130-020	1.180
20130-021	1.158
20130-021	1.180
20130-021	1.70
20130-022	1.158
20130-022	1.180
20130-022	1.28
20130-022	1.40
20130-022	1.70
20130-023	1.158
20130-023	1.180
20130-023	1.28
20130-023	1.40
20130-023	1.70
20130-024	1.158
20130-024	1.180
20130-025	1.158
20130-025	1.180
20130-026	1.28
20130-026	1.40
20130-027	1.158
20130-027	1.180
20130-027	1.28
20130-027	1.40
20130-027	1.70
20130-028	1.158
20130-028	1.180
20130-028	1.28
20130-028	1.40
20130-028	1.70
20130-029	1.158
20130-029	1.180
20130-030	1.158
20130-030	1.180
20130-030	1.70
20130-031	1.158
20130-031	1.180
20130-032	1.158
20130-032	1.180
20130-032	1.28
20130-032	1.40
20130-032	1.70
20130-033	1.158
20130-033	1.180
20130-034	1.158
20130-034	1.180
20130-035	1.158
20130-035	1.180
20130-036	1.158
20130-036	1.180
20130-037	1.158
20130-037	1.180
20130-038	1.158
20130-038	1.180
20130-051	1.158
20130-051	1.180
20130-052	1.158
20130-052	1.180
20130-053	1.158
20130-053	1.180
20130-054	1.158
20130-054	1.180
20130-055	1.158
20130-055	1.180

Appendix

Part no.	Page
20130-055	1.28
20130-055	1.40
20130-055	1.70
20130-056	1.158
20130-056	1.180
20130-056	1.28
20130-056	1.40
20130-056	1.70
20130-057	1.158
20130-057	1.180
20130-058	1.158
20130-058	1.180
20130-059	1.28
20130-059	1.40
20130-059	1.70
20130-060	1.28
20130-060	1.40
20130-060	1.70
20130-063	1.158
20130-063	1.180
20130-063	1.28
20130-063	1.40
20130-063	1.70
20130-064	1.158
20130-064	1.180
20130-064	1.28
20130-064	1.40
20130-064	1.70
20130-065	1.158
20130-065	1.180
20130-065	1.28
20130-065	1.40
20130-065	1.70
20130-066	1.158
20130-066	1.180
20130-068	1.158
20130-068	1.180
20130-068	1.28
20130-068	1.40
20130-068	1.70
20130-069	1.158
20130-069	1.180
20130-069	1.28
20130-069	1.40
20130-069	1.70
20130-070	1.158
20130-070	1.180
20130-071	1.158
20130-071	1.180
20130-071	1.70
20130-072	1.158
20130-072	1.180
20130-072	1.28
20130-072	1.40
20130-072	1.70
20130-073	1.158
20130-073	1.180
20130-073	1.28
20130-073	1.40
20130-073	1.70
20130-074	1.158
20130-074	1.180
20130-075	1.158
20130-075	1.180
20130-077	1.158
20130-077	1.180
20130-077	1.28
20130-077	1.40
20130-077	1.70
20130-078	1.158
20130-078	1.180
20130-078	1.28
20130-078	1.40
20130-078	1.70
20130-079	1.158
20130-079	1.180
20130-080	1.158
20130-080	1.180
20130-080	1.70
20130-081	1.158
20130-081	1.180
20130-082	1.158
20130-082	1.180
20130-082	1.28
20130-082	1.40
20130-082	1.70
20130-083	1.158
20130-083	1.180
20130-084	1.158
20130-084	1.180
20130-085	1.158
20130-085	1.180
20130-086	1.158
20130-086	1.180
20130-087	1.158
20130-087	1.180
20130-088	1.158
20130-088	1.180
20130-578	1.158
20130-578	1.180
20130-579	1.158
20130-579	1.180
20130-580	1.158
20130-580	1.180
20130-581	1.158
20130-581	1.180
20130-582	1.158
20130-582	1.180
20130-583	1.158
20130-583	1.180
20130-584	1.158
20130-584	1.180
20130-585	1.158
20130-585	1.180
20130-586	1.158
20130-586	1.180
20130-587	1.158
20130-587	1.180
20130-588	1.158
20130-588	1.180
20130-589	1.158
20130-589	1.180
20130-590	1.158
20130-590	1.180
20130-591	1.158
20130-591	1.180
20130-592	1.158
20130-592	1.180
20130-593	1.158
20130-593	1.180
20130-594	1.158
20130-594	1.180
20130-595	1.158
20130-595	1.180
20130-596	1.158
20130-596	1.180
20130-597	1.158
20130-597	1.180
20130-598	1.146
20130-617	1.102
20130-617	1.106
20130-617	1.98
20130-618	1.102
20130-618	1.106
20130-618	1.98
20130-621	1.102
20130-621	1.106
20130-621	1.98
20130-622	1.102
20130-622	1.106
20130-622	1.98
20130-623	1.102
20130-623	1.106
20130-623	1.98
20130-624	1.102
20130-624	1.106
20130-624	1.98
20130-625	1.102
20130-625	1.106
20130-625	1.98
20130-626	1.102
20130-626	1.106
20130-626	1.98
20130-627	1.102
20130-627	1.106
20130-627	1.98
20130-628	1.102
20130-628	1.106
20130-628	1.98
20130-629	1.102
20130-629	1.106
20130-629	1.98
20130-630	1.102
20130-630	1.106
20130-630	1.98
20130-631	1.102
20130-631	1.106
20130-631	1.98
20130-632	1.102
20130-632	1.106
20130-632	1.98
20130-633	1.102
20130-633	1.106
20130-633	1.98
20130-634	1.102
20130-634	1.106
20130-634	1.98
20130-636	1.102
20130-636	1.106
20130-636	1.98
20150-011	1.295
20150-011	1.307
20225-167	5.114
20225-439	5.105
20230-409	1.258
20505-032	5.113
20603-001	5.107
20603-001	5.116
20603-001	5.23
20603-001	5.61
20603-001	5.62
20603-001	5.72
20603-001	5.87
20603-002	5.107
20603-002	5.116
20603-002	5.23
20603-002	5.61
20603-002	5.62
20603-002	5.72
20603-002	5.87
20603-003	5.23
20603-004	5.23
20700-001	4.10
20700-001	4.16
20700-001	4.61
20705-008	4.9
20713-048	1.294
20713-048	1.295
20713-048	1.306
20713-048	1.307

Appendix

Part no.	Page
20713-142	4.16
20713-142	4.61
20713-146	4.16
20713-146	4.61
20713-147	4.10
20713-147	4.16
20713-147	4.61
20713-172	4.16
20713-212	4.14
20713-213	4.14
20713-214	4.14
20713-215	4.14
20713-216	4.14
20713-217	4.14
20713-218	4.14
20713-219	4.14
20713-220/05	4.14
20713-221/05	4.14
20713-222/05	4.14
20713-223/05	4.14
20713-224/05	4.14
20713-225/05	4.14
20713-226/05	4.14
20713-227/05	4.14
20713-228/05	4.14
20713-229/05	4.14
20713-230/05	4.14
20713-231/05	4.14
20713-236/05	4.14
20713-237/05	4.14
20713-238/05	4.14
20713-239/05	4.14
20713-240	4.10
20713-240	4.16
20713-240	4.6
20713-240	4.7
20713-241	4.16
20713-242	4.16
20713-243	1.295
20713-243	1.307
20713-243	4.10
20713-243	4.16
20713-243	4.6
20713-243	4.61
20713-243	4.7
20713-244	4.10
20713-244	4.16
20713-244	4.6
20713-244	4.61
20713-244	4.7
20713-502	4.13
20713-503	4.13
20713-504	4.13
20713-505	4.13
20715-001	4.58
20715-001	4.59
20715-001	4.60
20715-003	4.64
20800-032	7.105
20800-036	11.8
20800-042	11.8
20800-078	11.8
20800-168	10.26
20800-212	10.27
20800-213	10.27
20800-224	10.26
20800-278	10.26
20800-279	10.26
20808-003	7.55
20808-004	7.55
20808-004	7.75
20808-009	7.55
20808-012	7.55
20808-060	7.55
20808-061	7.55
20808-062	7.55
20808-062	7.75
20808-063	7.55
20808-064	7.55
20808-064	7.75
20808-065	7.55
20808-065	7.75
20808-066	7.55
20808-066	7.75
20808-067	7.55
20808-067	7.75
20808-068	7.55
20808-068	7.75
20808-080	7.55
20808-081	7.55
20808-082	7.55
20808-083	7.55
20808-083	7.75
20808-084	7.55
20808-085	7.55
20808-085	7.75
20808-086	7.55
20808-086	7.75
20808-087	7.55
20808-087	7.75
20808-088	7.55
20808-088	7.75
20808-089	7.55
20808-089	7.75
20808-090	7.55
20808-091	7.55
20808-091	7.75
20808-092	7.55
20808-137	7.49
20809-281	7.55
20809-282	7.55
20809-283	7.55
20809-284	7.55
20809-285	7.55
20809-286	7.55
20809-287	7.55
20809-288	7.55
20809-289	7.55
20809-290	7.55
20809-291	7.55
20809-292	7.55
20809-293	7.55
20809-294	7.55
20809-295	7.55
20809-329	7.61
20809-357	7.61
20809-359	7.61
20809-371	7.60
20809-371	7.61
20809-396	7.55
20809-397	7.55
20809-441	11.8
20809-441	7.105
20809-495	7.61
20809-496	7.61
20809-497	7.61
20809-498	7.61
20809-502	7.60
20809-507	7.53
20809-511	7.61
20809-512	7.61
20809-513	7.61
20809-516	7.60
20809-529	7.90
20809-530	7.90
20809-531	7.90
20809-532	7.90
20809-533	7.90
20809-534	7.90
20809-536	7.90
20809-537	7.90
20809-538	7.90
20809-539	7.90
20809-540	7.90
20809-541	7.90
20810-605	8.110
20810-611	8.110
20817-325	7.46
20817-326	7.46
20817-327	7.41
20817-328	7.41
20817-329	7.41
20817-330	7.41
20817-345	7.46
20817-346	7.46
20817-368	6.134
20817-369	6.134
20817-443	7.39
20817-444	7.39
20817-445	7.39
20817-446	7.39
20817-447	7.39
20817-448	7.39
20817-449	7.39
20817-450	7.39
20817-451	7.39
20817-452	7.39
20817-456	7.39
20817-457	7.39
20817-458	7.39
20817-459	7.39
20817-501	5.42
20817-501	6.106
20817-501	6.107
20817-501	6.14
20817-501	6.15
20817-501	6.38
20817-501	6.41
20817-501	6.81
20817-501	7.23
20817-606	7.18
20817-606	7.23
20817-612	7.20
20817-613	7.20
20817-614	7.20
20817-615	7.20
20817-620	7.20
20817-621	7.20
20817-622	7.20
20817-623	7.20
20817-652	7.21
20817-653	7.21
20817-654	7.21
20817-655	7.21
20817-660	7.21
20817-661	7.21
20817-662	7.21
20817-663	7.21
20817-682	7.20
20817-683	7.20
20817-684	7.20
20817-685	7.20
20817-690	7.20
20817-691	7.20
20817-692	7.20
20817-693	7.20
20817-706	7.21
20817-707	7.21
20817-708	7.21
20817-709	7.21

Appendix

Part no.	Page
20817-714	7.21
20817-715	7.21
20817-716	7.21
20817-717	7.21
20817-829	7.34
20817-831	7.34
20817-833	7.34
20817-853	8.32
20817-853	8.33
20817-853	8.34
20817-854	7.34
20817-856	7.34
20817-858	7.34
20817-860	7.32
20817-861	7.32
20817-862	7.32
20817-863	7.32
20817-864	7.32
20817-865	7.32
20817-866	7.32
20817-867	7.32
20817-868	7.32
20817-869	7.32
20817-870	7.32
20817-871	7.32
20817-872	7.32
20817-873	7.32
20817-874	7.29
20817-877	7.29
20817-900	10.14
20817-909	8.32
20817-909	8.33
20817-909	8.34
20817-969	10.14
20817-970	10.14
20818-017	7.53
20818-018	7.53
20818-019	7.53
20818-020	7.53
20818-021	7.53
20818-022	7.53
20818-023	7.53
20818-024	7.53
20818-025	7.53
20818-026	7.53
20818-027	7.53
20818-028	7.53
20818-029	7.53
20818-120	7.53
20818-121	8.15
20818-122	8.15
20818-123	8.15
20818-124	8.15
20818-140	8.12
20818-140	8.13
20818-140	8.14
20818-140	8.15
20818-145	8.15
20818-146	8.15
20818-147	8.15
20818-148	8.15
20818-160	8.12
20818-161	8.12
20818-162	7.53
20818-163	8.13
20818-164	8.13
20818-169	8.12
20818-170	8.12
20822-046	6.34
20822-047	5.35
20822-047	5.69
20822-047	5.91
20822-047	6.34
20822-048	5.35
20822-048	5.69
20822-048	5.91
20822-048	6.34
20822-049	5.35
20822-049	5.69
20822-049	5.91
20822-049	6.34
20822-050	5.35
20822-050	5.69
20822-050	5.91
20822-050	6.34
20822-051	6.34
20823-668	5.84
20823-669	5.84
20823-674	5.84
20823-675	5.83
20823-676	5.83
20825-120	6.134
20825-121	6.134
20828-028	6.131
20828-127	6.133
20828-128	6.133
20828-129	6.133
20829-003	7.44
20829-004	7.44
20829-011	7.44
20833-351	5.26
20833-352	5.26
20833-353	5.26
20835-188	8.111
20835-598	7.13
20835-889	7.13
20835-890	7.13
20835-893	7.13
20835-896	7.13
20835-899	7.13
20835-922	7.13
20835-923	7.13
20835-924	7.13
20835-928	7.13
20835-929	7.13
20835-931	7.13
20836-145	8.95
20836-220	8.100
20836-223	8.100
20836-235	8.102
20836-235	8.103
20836-245	8.96
20836-310	8.90
20836-415	8.91
20836-416	8.97
20836-444	8.104
20836-715	8.92
20836-716	8.93
20836-717	8.98
20836-815	8.94
20836-820	8.99
20836-855	8.100
20838-001	7.91
20838-002	7.91
20838-003	7.91
20838-004	7.91
20838-005	7.91
20838-006	7.91
20838-084	1.351
20838-086	1.351
20838-093	7.91
20838-094	7.91
20838-095	7.91
20838-096	7.91
20838-097	7.91
20838-098	7.91
20838-271	6.51
20838-271	7.8
20838-272	6.51
20838-272	7.8
20838-273	6.51
20838-273	7.8
20838-274	6.51
20838-274	7.8
20838-275	6.51
20838-275	7.8
20838-276	6.51
20838-276	7.8
20838-277	6.51
20838-277	7.8
20838-278	6.51
20838-278	7.8
20838-279	6.51
20838-279	7.8
20838-280	6.51
20838-280	7.8
20846-425	6.49
20846-425	7.5
20846-426	6.49
20846-426	7.5
20846-427	6.49
20846-427	7.5
20846-428	6.49
20846-428	7.5
20846-429	6.49
20846-429	7.5
20846-430	6.49
20846-430	7.5
20846-431	6.49
20846-431	7.5
20846-432	6.49
20846-432	7.5
20846-433	6.49
20846-433	7.5
20846-434	6.49
20846-434	7.5
20846-436	6.49
20846-436	7.5
20846-437	6.49
20846-437	7.5
20846-438	6.49
20846-438	7.5
20846-443	6.49
20846-443	7.5
20846-444	6.49
20846-444	7.5
20846-445	6.49
20846-445	7.5
20846-446	6.49
20846-446	7.5
20846-447	6.49
20846-447	7.5
20846-448	6.49
20846-448	7.5
20846-449	6.49
20846-449	7.5
20846-450	6.49
20846-450	7.5
20846-451	6.49
20846-451	7.5
20846-452	6.49
20846-452	7.5
20846-453	6.49
20846-453	7.5
20846-454	6.49
20846-454	7.5
20846-456	6.49
20846-456	7.5
20848-013	6.50
20848-013	7.7

Appendix

Part no.	Page	Part no.	Page	Part no.	Page	Part no.	Page	Part no.	Page
20848-015	7.7	20848-489	7.38	20848-633	5.22	20848-681	5.22	20848-729	5.75
20848-020	6.50	20848-490	7.38	20848-633	5.55	20848-681	5.55	20848-729	6.61
20848-020	7.7	20848-491	7.38	20848-634	5.22	20848-682	5.22	20848-730	5.43
20848-027	6.50	20848-492	7.38	20848-634	5.55	20848-682	5.55	20848-730	5.75
20848-027	7.7	20848-494	7.38	20848-635	5.22	20848-686	7.31	20848-730	6.61
20848-047	6.50	20848-496	7.38	20848-635	5.55	20848-687	7.31	20848-731	5.43
20848-047	7.7	20848-497	7.38	20848-636	5.22	20848-688	7.31	20848-731	5.75
20848-068	6.50	20848-498	7.38	20848-636	5.55	20848-689	7.31	20848-731	6.61
20848-068	7.7	20848-585	7.18	20848-640	5.22	20848-690	7.31	20848-732	5.43
20848-097	6.50	20848-587	7.18	20848-640	5.55	20848-691	7.31	20848-732	5.75
20848-097	7.7	20848-589	7.18	20848-641	5.22	20848-692	7.31	20848-732	6.61
20848-106	6.50	20848-590	7.18	20848-641	5.55	20848-693	7.31	20848-733	5.43
20848-106	7.7	20848-591	7.18	20848-642	5.22	20848-694	7.31	20848-733	5.75
20848-108	6.50	20848-592	7.18	20848-642	5.55	20848-695	7.31	20848-733	6.61
20848-108	7.7	20848-594	7.18	20848-643	5.22	20848-696	6.51	20848-736	5.43
20848-113	6.50	20848-596	7.18	20848-643	5.55	20848-696	7.8	20848-736	5.75
20848-113	7.7	20848-597	7.18	20848-656	5.22	20848-712	5.43	20848-736	6.61
20848-120	6.50	20848-598	7.18	20848-656	5.55	20848-712	6.61	20848-738	5.43
20848-120	7.7	20848-599	6.51	20848-657	5.22	20848-713	5.43	20848-738	5.75
20848-139	6.50	20848-599	7.8	20848-657	5.55	20848-713	6.61	20848-738	6.61
20848-139	7.7	20848-600	6.51	20848-658	5.22	20848-714	5.43	20848-739	5.43
20848-160	6.50	20848-600	7.8	20848-658	5.55	20848-714	6.61	20848-739	5.75
20848-160	7.7	20848-601	6.51	20848-659	5.22	20848-715	5.43	20848-739	6.61
20848-189	6.50	20848-601	7.8	20848-659	5.55	20848-715	6.61	20848-740	5.43
20848-189	7.7	20848-602	6.51	20848-663	7.52	20848-716	5.43	20848-740	5.75
20848-227	7.19	20848-602	7.8	20848-664	7.52	20848-716	6.61	20848-740	6.61
20848-228	7.19	20848-603	6.51	20848-665	7.52	20848-717	5.43	20848-741	5.43
20848-230	7.19	20848-603	7.8	20848-666	7.52	20848-717	6.61	20848-741	5.75
20848-232	7.19	20848-604	6.51	20848-667	7.52	20848-720	5.43	20848-741	6.61
20848-243	7.19	20848-604	7.8	20848-668	7.52	20848-720	6.61	20848-744	5.22
20848-244	7.19	20848-605	6.51	20848-669	7.52	20848-721	5.43	20848-745	5.22
20848-246	7.19	20848-605	7.8	20848-670	7.52	20848-721	6.61	20848-746	5.22
20848-248	7.19	20848-606	6.51	20848-671	7.52	20848-722	5.43	20848-747	5.22
20848-262	6.50	20848-606	7.8	20848-672	7.52	20848-722	6.61	20848-751	7.18
20848-262	7.7	20848-607	6.51	20848-673	7.52	20848-723	5.43	20848-752	7.18
20848-268	6.50	20848-607	7.8	20848-674	7.52	20848-723	6.61	20849-008	8.30
20848-269	6.50	20848-608	6.51	20848-675	7.52	20848-724	5.43	20849-009	8.30
20848-270	6.50	20848-608	7.8	20848-676	7.52	20848-724	6.61	20849-010	8.30
20848-271	6.50	20848-611	5.57	20848-677	7.52	20848-725	5.43	20849-011	8.30
20848-271	7.7	20848-611	6.51	20848-678	7.52	20848-725	6.61	20849-016	8.63
20848-280	6.50	20848-611	7.9	20848-679	5.22	20848-728	5.43	20849-017	8.63
20848-280	7.7	20848-617	5.57	20848-679	5.55	20848-728	5.75	20849-018	8.63
20848-485	7.38	20848-617	6.51	20848-680	5.22	20848-728	6.61	20849-021	8.30
20848-487	7.38	20848-617	7.9	20848-680	5.55	20848-729	5.43	20849-021	8.34

Appendix

Part no.	Page
20849-022	8.63
20849-023	8.63
20849-024	8.63
20849-025	8.63
20849-106	8.63
20849-107	8.63
20849-115	8.38
20849-115	8.39
20849-115	8.40
20849-115	8.48
20849-127	8.59
20849-128	8.59
20849-129	8.59
20849-130	8.59
20849-131	8.59
20849-132	8.59
20849-151	8.61
20849-152	8.61
20849-153	8.61
20849-154	8.61
20849-155	8.61
20849-156	8.61
20849-166	8.34
20849-194	8.49
20849-195	8.49
20849-196	8.49
20849-197	8.49
20849-198	8.49
20849-199	8.49
20849-200	8.49
20849-201	8.49
20849-202	8.49
20849-209	8.58
20849-209	8.59
20849-209	8.62
20849-209	8.67
20849-213	8.65
20849-214	8.65
20849-235	8.28
20849-235	8.29
20849-235	8.30
20849-235	8.31
20849-236	8.28
20849-236	8.29

Part no.	Page
20849-236	8.30
20849-236	8.31
20849-242	8.34
20849-248	8.63
20849-249	8.63
20849-250	8.63
20849-251	8.63
20849-268	8.59
20849-269	8.59
20849-270	8.59
20849-271	8.59
20849-288	8.58
20849-289	8.58
20849-290	8.58
20849-291	8.58
20849-304	8.63
20849-305	8.63
20849-312	8.59
20849-313	8.59
20849-332	8.58
20849-333	8.58
20849-334	8.58
20849-335	8.58
20849-348	8.66
20849-349	8.66
20849-350	8.66
20849-351	8.66
20849-352	8.66
20849-353	8.66
20849-355	8.66
20849-356	8.66
20849-357	8.66
20850-128	5.54
20850-129	5.54
20850-130	5.54
20850-134	5.54
20850-135	5.54
20850-136	5.54
20850-137	5.54
20850-142	5.54
20850-143	5.54
20850-144	5.54
20850-158	5.54
20850-184	5.58

Part no.	Page
20850-185	5.58
20850-186	5.58
20850-190	5.58
20850-191	5.58
20850-192	5.58
20850-196	5.58
20850-197	5.58
20850-198	5.58
20850-249	5.111
20850-249	5.60
20850-299	5.58
20850-300	5.58
20850-301	5.58
20850-315	5.58
20850-316	5.58
20850-317	5.58
20850-331	5.58
20850-332	5.58
20850-333	5.58
20850-423	5.54
20850-423	6.48
20850-424	5.54
20850-424	6.48
20850-425	5.54
20850-425	6.48
20850-426	5.54
20850-426	6.48
20850-426	7.4
20860-107	6.120
20860-108	6.120
20860-109	6.120
20860-110	6.120
20860-111	6.120
20860-115	6.117
20860-115	6.122
20860-116	6.117
20860-116	6.122
20860-117	6.117
20860-117	6.122
20860-118	6.117
20860-118	6.122
20860-120	6.114
20860-121	6.114
20860-122	6.114

Part no.	Page
20860-126	6.114
20860-127	6.114
20860-130	6.115
20860-130	6.116
20860-130	6.117
20860-130	6.121
20860-130	6.123
20860-131	6.121
20860-131	6.123
20860-201	6.120
20860-201	6.122
20860-202	6.120
20860-202	6.122
20860-203	6.120
20860-203	6.122
20860-210	6.120
20860-210	6.122
20860-211	6.120
20860-211	6.122
20860-212	6.120
20860-212	6.122
20860-219	6.120
20860-220	6.120
20860-221	6.120
20860-222	6.120
20860-228	6.120
20860-229	6.120
20860-230	6.120
20860-231	6.120
20860-240	6.120
20860-256	5.109
20860-256	6.114
20860-256	6.115
20860-256	6.116
20860-256	6.117
20860-256	6.121
20860-256	6.123
20860-257	5.109
20860-257	6.114
20860-257	6.115
20860-257	6.116
20860-257	6.117
20860-257	6.121
20860-257	6.123

Part no.	Page
20860-258	5.109
20860-258	6.115
20860-258	6.116
20860-258	6.121
20860-259	5.109
20860-259	6.115
20860-259	6.116
20860-259	6.121
20860-260	5.109
20860-260	6.115
20860-260	6.116
20860-260	6.121
20860-601	6.115
20860-602	6.115
20860-605	6.115
20860-606	6.115
20860-607	6.115
20860-608	6.115
20860-609	6.115
20860-612	6.115
20860-613	6.115
20860-614	6.115
20860-615	6.115
20860-621	6.116
20860-622	6.116
20860-625	6.116
20860-626	6.116
20860-627	6.116
20860-628	6.116
20860-629	6.116
20860-632	6.116
20860-633	6.116
20860-634	6.116
20860-635	6.116
20860-641	6.117
20860-642	6.117
20860-645	6.117
20897-950	7.12
21005-439	9.12
21005-451	9.12
21005-470	9.12
21005-473	9.10
21005-474	9.10
21005-475	9.10

Appendix

Part no.	Page
21005-476	9.11
21005-477	9.11
21005-478	9.11
21006-943	9.3
21006-943	9.4
21006-945	9.7
21006-945	9.8
21006-946	9.9
21006-954	9.5
21006-955	9.13
21006-956	9.13
21006-956	9.14
21006-957	9.15
21006-959	9.2
21009-038	9.21
21009-039	9.24
21009-039	9.25
21100-001	3.18
21100-002	3.18
21100-003	3.17
21100-004	3.17
21100-015	3.17
21100-016	3.17
21100-021	3.17
21100-022	3.17
21100-076	7.103
21100-089	5.114
21100-093	5.114
21100-105	7.92
21100-112	7.92
21100-123	3.21
21100-142	7.111
21100-144	7.104
21100-144	7.111
21100-144	7.42
21100-144	7.47
21100-144	7.50
21100-144	7.57
21100-146	6.132
21100-146	7.103
21100-150	7.93
21100-207	5.107
21100-207	5.116
21100-207	5.117
21100-207	5.72
21100-207	5.87
21100-211	5.107
21100-211	5.116
21100-211	5.117
21100-211	5.72
21100-211	5.87
21100-215	3.18
21100-216	3.18
21100-268	7.108
21100-276	5.35
21100-276	5.68
21100-276	5.90
21100-276	6.104
21100-276	6.33
21100-276	6.66
21100-276	7.111
21100-289	7.92
21100-293	11.4
21100-294	11.4
21100-347	5.106
21100-359	7.111
21100-359	7.55
21100-359	7.93
21100-404	11.8
21100-429	7.109
21100-429	7.22
21100-429	7.35
21100-429	7.42
21100-429	7.47
21100-429	7.50
21100-429	7.57
21100-429	7.93
21100-431	7.92
21100-435	2.34
21100-435	2.35
21100-435	5.106
21100-435	6.10
21100-435	6.11
21100-435	6.12
21100-435	6.13
21100-435	6.14
21100-435	6.15
21100-435	6.66
21100-435	6.73
21100-435	6.74
21100-435	6.75
21100-435	6.76
21100-435	6.77
21100-435	6.78
21100-435	6.79
21100-435	6.8
21100-435	6.80
21100-435	6.9
21100-448	5.106
21100-459	7.104
21100-459	7.111
21100-464	6.63
21100-464	7.107
21100-464	7.22
21100-464	7.35
21100-464	7.42
21100-464	7.47
21100-464	7.50
21100-464	7.57
21100-464	7.78
21100-464	7.93
21100-476	7.55
21100-490	5.106
21100-500	7.109
21100-507	7.109
21100-507	7.93
21100-513	5.116
21100-515	7.103
21100-515	7.109
21100-515	7.93
21100-542	7.109
21100-553	6.134
21100-554	6.134
21100-558	3.19
21100-565	6.24
21100-566	6.24
21100-569	7.103
21100-574	8.111
21100-586	3.16
21100-591	6.63
21100-591	7.107
21100-624	7.13
21100-646	5.35
21100-646	5.68
21100-646	5.90
21100-646	6.104
21100-646	6.33
21100-646	6.66
21100-646	7.111
21100-647	5.85
21100-648	7.109
21100-649	7.109
21100-650	3.17
21100-659	6.63
21100-659	7.107
21100-660	6.63
21100-660	7.107
21100-660	7.57
21100-661	6.63
21100-661	7.107
21100-662	6.63
21100-662	7.107
21100-662	7.22
21100-662	7.35
21100-662	7.42
21100-662	7.47
21100-662	7.50
21100-662	7.57
21100-671	6.135
21100-672	6.135
21100-677	6.132
21100-710	7.42
21100-710	7.47
21100-710	7.50
21100-710	7.57
21100-711	8.111
21100-712	7.109
21100-712	8.111
21100-719	7.46
21100-721	7.111
21100-721	7.22
21100-721	7.35
21100-721	7.42
21100-721	7.47
21100-721	7.50
21100-721	7.57
21100-748	7.107
21100-748	7.108
21100-748	7.35
21100-748	7.42
21100-748	7.47
21100-748	7.50
21100-748	7.57
21100-748	7.78
21100-748	7.93
21100-749	7.108
21100-777	10.28
21100-777	6.65
21100-777	7.110
21100-788	3.3
21100-788	5.109
21100-788	5.110
21100-788	7.110
21100-814	6.133
21100-886	6.63
21101-007	3.19
21101-069	7.104
21101-069	7.110
21101-069	7.57
21101-101	5.39
21101-101	5.70
21101-101	5.95
21101-101	6.109
21101-101	6.57
21101-101	6.64
21101-101	7.107
21101-101	7.108
21101-101	7.22
21101-101	7.35
21101-101	7.42
21101-101	7.47
21101-101	7.50
21101-101	7.57
21101-101	7.78
21101-101	7.93
21101-102	5.39
21101-102	5.70
21101-102	5.95
21101-102	6.109
21101-102	6.57

Appendix

Part no.	Page
21101-102	6.64
21101-102	7.108
21101-104	4.10
21101-106	7.108
21101-121	5.39
21101-121	5.70
21101-121	5.95
21101-121	6.109
21101-121	6.57
21101-121	7.111
21101-122	2.39
21101-122	2.42
21101-123	2.39
21101-123	2.42
21101-127	1.282
21101-132	1.315
21101-150	1.141
21101-150	1.24
21101-150	1.66
21101-150	1.93
21101-151	1.141
21101-151	1.24
21101-151	1.66
21101-151	1.93
21101-171	3.19
21101-172	3.19
21101-173	3.17
21101-173	3.19
21101-175	1.358
21101-175	1.359
21101-178	1.315
21101-201	1.276
21101-201	1.277
21101-201	1.280
21101-201	1.290
21101-201	1.296
21101-201	1.302
21101-201	1.308
21101-211	5.107
21101-211	5.117
21101-211	5.72
21101-211	5.87
21101-219	7.110
21101-219	7.22
21101-219	7.35
21101-220	7.110
21101-220	7.22
21101-220	7.42
21101-220	7.47
21101-220	7.50
21101-221	7.110
21101-221	7.57
21101-222	7.110
21101-222	7.57
21101-239	7.55
21101-239	7.78
21101-246	4.13
21101-246	4.61
21101-252	11.7
21101-314	7.110
21101-323	7.108
21101-359	5.35
21101-359	5.68
21101-359	6.104
21101-359	6.33
21101-359	6.66
21101-359	7.111
21101-360	1.348
21101-360	1.350
21101-381	5.108
21101-529	3.33
21101-530	3.33
21101-531	3.33
21101-532	3.33
21101-533	3.33
21101-534	3.33
21101-539	1.276
21101-539	1.277
21101-539	1.290
21101-539	1.302
21101-596	1.283
21101-596	1.359
21101-658	10.5
21101-658	10.6
21101-658	10.7
21101-705	6.20
21101-705	6.22
21101-705	6.49
21101-705	6.53
21101-705	7.6
21101-705	7.91
21101-705	9.10
21101-705	9.11
21101-705	9.12
21101-705	9.13
21101-705	9.14
21101-705	9.15
21101-705	9.2
21101-705	9.3
21101-705	9.4
21101-705	9.5
21101-705	9.7
21101-705	9.8
21101-705	9.9
21101-706	6.49
21101-706	6.53
21101-706	7.6
21101-707	6.20
21101-707	6.22
21101-707	6.49
21101-707	6.53
21101-707	7.6
21101-707	9.20
21101-708	6.49
21101-708	6.53
21101-708	7.6
21101-709	6.20
21101-709	6.49
21101-709	6.53
21101-709	7.6
21101-710	6.49
21101-710	6.53
21101-710	7.6
21101-713	6.20
21101-713	6.49
21101-713	6.53
21101-713	7.6
21101-714	6.49
21101-714	6.53
21101-714	7.6
21101-749	6.64
21101-749	7.108
21101-775	6.49
21101-775	7.6
21101-776	6.49
21101-778	7.6
21101-782	6.64
21101-782	7.108
21101-783	6.64
21101-783	7.108
21101-809	1.111
21101-809	1.141
21101-809	1.169
21101-809	1.19
21101-809	1.191
21101-809	1.337
21101-809	1.338
21101-809	1.356
21101-809	1.357
21101-809	1.44
21101-809	1.61
21101-809	1.75
21101-809	1.88
21101-809	3.17
21101-809	5.106
21101-809	6.66
21101-810	1.141
21101-810	1.19
21101-810	1.337
21101-810	1.338
21101-810	1.356
21101-810	1.357
21101-810	1.61
21101-810	1.88
21101-810	3.17
21101-810	5.106
21101-810	6.66
21101-836	2.10
21101-836	2.11
21101-847	6.63
21101-847	7.107
21101-848	6.63
21101-848	7.107
21101-849	6.63
21101-849	7.107
21101-850	6.63
21101-850	7.107
21101-853	5.22
21101-853	5.55
21101-853	6.110
21101-853	6.21
21101-853	6.23
21101-853	6.50
21101-853	6.53
21101-853	6.97
21101-853	7.19
21101-853	7.33
21101-853	7.40
21101-853	7.54
21101-853	7.6
21101-853	7.75
21101-853	8.111
21101-854	5.22
21101-854	5.55
21101-854	6.110
21101-854	6.50
21101-854	6.53
21101-854	7.19
21101-854	7.33
21101-854	7.40
21101-854	7.54
21101-854	7.6
21101-854	7.75
21101-854	8.111
21101-855	5.22
21101-855	5.39
21101-855	5.55
21101-855	5.70
21101-855	5.95
21101-855	6.109
21101-855	6.110
21101-855	6.21
21101-855	6.23
21101-855	6.53
21101-855	6.57
21101-855	6.97
21101-855	7.19
21101-855	7.29
21101-855	7.33
21101-855	7.40

Appendix

Part no.	Page	Part no.	Page	Part no.	Page	Part no.	Page	Part no.	Page
21101-855	7.54	**21101-954**	6.20	**21117-170**	1.303	**21120-131**	3.17	**21126-271**	3.14
21101-855	7.6	**21101-954**	6.21	**21117-171**	1.291	**21120-132**	3.17	**21127-197**	1.284
21101-855	7.75	**21101-954**	6.22	**21117-171**	1.303	**21120-140**	1.117	**21127-197**	1.298
21101-855	8.111	**21101-954**	6.23	**21117-172**	1.291	**21120-140**	1.151	**21127-197**	1.311
21101-855	6.50	**21101-954**	6.24	**21117-172**	1.303	**21120-140**	1.154	**21127-198**	1.284
21101-856	5.22	**21101-958**	4.12	**21117-173**	1.291	**21120-140**	1.176	**21127-198**	1.298
21101-856	5.55	**21101-964**	6.65	**21117-173**	1.303	**21120-140**	1.198	**21127-198**	1.311
21101-856	6.110	**21101-964**	7.111	**21117-179**	1.291	**21120-140**	1.24	**21127-199**	1.298
21101-856	6.50	**21101-978**	5.22	**21117-179**	1.303	**21120-140**	1.25	**21127-199**	1.311
21101-856	6.53	**21101-978**	7.6	**21117-180**	1.291	**21120-140**	1.282	**21127-990**	3.19
21101-856	7.19	**21101-990**	6.134	**21117-180**	1.303	**21120-140**	1.52	**21130-001**	1.159
21101-856	7.29	**21102-001**	5.50	**21117-181**	1.291	**21120-140**	1.66	**21130-002**	1.159
21101-856	7.33	**21102-001**	5.51	**21117-181**	1.303	**21120-140**	1.67	**21130-003**	1.103
21101-856	7.40	**21102-001**	5.52	**21117-182**	1.291	**21120-140**	1.83	**21130-003**	1.159
21101-856	7.54	**21102-001**	5.65	**21117-182**	1.303	**21120-140**	1.93	**21130-003**	1.29
21101-856	7.6	**21102-007**	7.62	**21117-184**	1.278	**21120-140**	1.94	**21130-003**	1.41
21101-856	7.75	**21102-008**	7.62	**21117-185**	1.278	**21120-145**	1.282	**21130-003**	1.99
21101-856	8.111	**21102-013**	4.16	**21117-185**	1.292	**21120-146**	1.282	**21130-004**	1.103
21101-857	5.22	**21102-014**	4.17	**21117-185**	1.304	**21120-147**	1.282	**21130-004**	1.159
21101-857	5.55	**21102-015**	4.17	**21117-186**	1.278	**21120-148**	3.18	**21130-004**	1.29
21101-857	7.6	**21102-024**	8.65	**21117-186**	1.292	**21120-149**	3.18	**21130-004**	1.41
21101-858	5.22	**21102-025**	7.100	**21117-186**	1.304	**21120-150**	3.37	**21130-004**	1.99
21101-858	5.55	**21102-025**	7.101	**21117-187**	1.278	**21120-158**	3.25	**21130-005**	1.103
21101-858	6.21	**21117-158**	1.291	**21117-187**	1.292	**21120-158**	3.26	**21130-005**	1.29
21101-858	6.50	**21117-158**	1.303	**21117-187**	1.304	**21120-159**	3.25	**21130-005**	1.41
21101-858	6.53	**21117-159**	1.291	**21117-188**	1.278	**21120-159**	3.26	**21130-005**	1.99
21101-858	7.6	**21117-159**	1.303	**21117-188**	1.292	**21120-160**	3.25	**21130-006**	1.103
21101-859	6.21	**21117-160**	1.291	**21117-188**	1.304	**21120-160**	3.26	**21130-006**	1.29
21101-859	6.50	**21117-160**	1.303	**21117-189**	1.278	**21120-161**	3.27	**21130-006**	1.41
21101-859	6.53	**21117-161**	1.291	**21117-189**	1.292	**21120-161**	6.126	**21130-006**	1.99
21101-859	7.6	**21117-161**	1.303	**21117-189**	1.304	**21120-162**	3.27	**21130-007**	1.103
21101-884	6.65	**21117-162**	1.291	**21117-190**	1.278	**21120-162**	6.126	**21130-007**	1.159
21101-904	6.50	**21117-162**	1.303	**21117-190**	1.292	**21120-163**	3.27	**21130-007**	1.29
21101-904	6.53	**21117-163**	1.291	**21117-190**	1.304	**21120-163**	6.126	**21130-007**	1.41
21101-904	7.6	**21117-163**	1.303	**21117-191**	1.278	**21120-164**	3.28	**21130-007**	1.99
21101-906	7.108	**21117-164**	1.291	**21117-191**	1.292	**21120-165**	3.28	**21130-008**	1.103
21101-909	6.64	**21117-164**	1.303	**21117-191**	1.304	**21120-166**	3.28	**21130-008**	1.159
21101-909	7.108	**21117-167**	1.291	**21117-198**	1.304	**21120-178**	4.63	**21130-008**	1.29
21101-914	7.63	**21117-167**	1.303	**21117-199**	1.304	**21120-178**	4.66	**21130-008**	1.41
21101-937	7.92	**21117-168**	1.291	**21117-200**	1.304	**21120-189**	1.254	**21130-008**	1.99
21101-954	4.10	**21117-168**	1.303	**21120-127**	3.18	**21120-189**	1.267	**21130-009**	1.29
21101-954	4.12	**21117-169**	1.291	**21120-128**	3.18	**21120-189**	1.286	**21130-009**	1.41
21101-954	4.6	**21117-169**	1.303	**21120-129**	3.18	**21120-189**	1.299	**21130-010**	1.103
21101-954	4.7	**21117-170**	1.291	**21120-130**	3.18	**21120-189**	1.313	**21130-010**	1.159

Appendix

Part no.	Page
21130-010	1.29
21130-010	1.41
21130-010	1.99
21130-011	1.103
21130-011	1.159
21130-011	1.29
21130-011	1.41
21130-011	1.99
21130-012	1.159
21130-013	1.159
21130-014	1.29
21130-014	1.41
21130-015	1.103
21130-015	1.159
21130-015	1.29
21130-015	1.41
21130-015	1.99
21130-016	1.103
21130-016	1.159
21130-016	1.29
21130-016	1.41
21130-016	1.99
21130-017	1.159
21130-018	1.159
21130-023	1.107
21130-023	1.71
21130-024	1.107
21130-024	1.71
21130-025	1.107
21130-025	1.71
21130-026	1.107
21130-026	1.71
21130-027	1.107
21130-027	1.71
21130-028	1.107
21130-028	1.71
21130-030	1.107
21130-030	1.71
21130-031	1.107
21130-031	1.71
21130-033	1.71
21130-035	1.107
21130-035	1.71
21130-036	1.107

Part no.	Page
21130-036	1.71
21130-038	1.71
21130-041	1.159
21130-042	1.159
21130-043	1.159
21130-043	1.29
21130-044	1.159
21130-044	1.29
21130-045	1.29
21130-046	1.29
21130-047	1.159
21130-047	1.29
21130-048	1.159
21130-048	1.29
21130-049	1.29
21130-050	1.159
21130-050	1.29
21130-051	1.159
21130-051	1.29
21130-052	1.159
21130-053	1.159
21130-054	1.29
21130-055	1.159
21130-055	1.29
21130-056	1.159
21130-056	1.29
21130-057	1.159
21130-058	1.159
21130-061	1.163
21130-062	1.163
21130-063	1.103
21130-063	1.163
21130-063	1.29
21130-063	1.41
21130-063	1.99
21130-064	1.163
21130-065	1.103
21130-065	1.29
21130-065	1.41
21130-065	1.99
21130-067	1.103
21130-067	1.163
21130-067	1.29
21130-067	1.41

Part no.	Page
21130-067	1.99
21130-068	1.29
21130-068	1.103
21130-068	1.163
21130-068	1.41
21130-068	1.99
21130-069	1.103
21130-069	1.163
21130-069	1.29
21130-069	1.41
21130-069	1.99
21130-070	1.103
21130-070	1.163
21130-070	1.29
21130-070	1.41
21130-070	1.99
21130-071	1.103
21130-071	1.163
21130-071	1.29
21130-071	1.41
21130-071	1.99
21130-072	1.103
21130-072	1.163
21130-072	1.29
21130-072	1.41
21130-072	1.99
21130-078	1.107
21130-078	1.71
21130-080	1.107
21130-080	1.71
21130-081	1.107
21130-082	1.107
21130-082	1.71
21130-083	1.107
21130-083	1.71
21130-084	1.107
21130-084	1.71
21130-085	1.107
21130-085	1.71
21130-086	1.107
21130-086	1.71
21130-087	1.107
21130-087	1.71
21130-091	1.163

Part no.	Page
21130-092	1.163
21130-093	1.163
21130-093	1.29
21130-094	1.163
21130-095	1.29
21130-097	1.163
21130-097	1.29
21130-098	1.163
21130-098	1.29
21130-099	1.163
21130-099	1.29
21130-100	1.163
21130-100	1.29
21130-101	1.163
21130-101	1.29
21130-102	1.163
21130-102	1.29
21130-106	1.161
21130-107	1.161
21130-108	1.161
21130-108	1.31
21130-109	1.161
21130-110	1.31
21130-112	1.161
21130-112	1.31
21130-113	1.161
21130-113	1.31
21130-114	1.161
21130-114	1.31
21130-115	1.161
21130-115	1.31
21130-116	1.161
21130-116	1.31
21130-117	1.161
21130-117	1.31
21130-121	1.160
21130-122	1.160
21130-123	1.160
21130-123	1.30
21130-124	1.160
21130-125	1.30
21130-127	1.160
21130-127	1.30
21130-128	1.160

Part no.	Page
21130-128	1.30
21130-129	1.160
21130-129	1.30
21130-130	1.160
21130-130	1.30
21130-131	1.160
21130-131	1.30
21130-132	1.160
21130-132	1.30
21130-136	1.161
21130-137	1.161
21130-138	1.161
21130-138	1.31
21130-139	1.161
21130-140	1.31
21130-142	1.161
21130-142	1.31
21130-143	1.161
21130-143	1.31
21130-144	1.161
21130-144	1.31
21130-145	1.161
21130-145	1.31
21130-146	1.161
21130-146	1.31
21130-147	1.161
21130-147	1.31
21130-151	1.161
21130-152	1.161
21130-153	1.103
21130-153	1.161
21130-153	1.31
21130-153	1.41
21130-153	1.99
21130-154	1.161
21130-155	1.103
21130-155	1.31
21130-155	1.41
21130-155	1.99
21130-157	1.103
21130-157	1.161
21130-157	1.31
21130-157	1.41
21130-157	1.99

Appendix

Part no.	Page
21130-158	1.103
21130-158	1.161
21130-158	1.31
21130-158	1.41
21130-158	1.99
21130-159	1.103
21130-159	1.161
21130-159	1.31
21130-159	1.41
21130-159	1.99
21130-160	1.103
21130-160	1.161
21130-160	1.31
21130-160	1.41
21130-160	1.99
21130-161	1.103
21130-161	1.161
21130-161	1.31
21130-161	1.41
21130-161	1.99
21130-162	1.103
21130-162	1.161
21130-162	1.31
21130-162	1.41
21130-162	1.99
21130-168	1.107
21130-168	1.71
21130-170	1.107
21130-170	1.71
21130-171	1.107
21130-172	1.107
21130-172	1.71
21130-173	1.107
21130-173	1.71
21130-174	1.107
21130-174	1.71
21130-175	1.107
21130-175	1.71
21130-176	1.107
21130-176	1.71
21130-177	1.107
21130-177	1.71
21130-181	1.160
21130-182	1.160
21130-183	1.160
21130-183	1.30
21130-183	1.41
21130-185	1.30
21130-185	1.41
21130-187	1.160
21130-187	1.30
21130-187	1.41
21130-188	1.160
21130-188	1.30
21130-188	1.41
21130-189	1.160
21130-189	1.30
21130-189	1.41
21130-190	1.160
21130-190	1.30
21130-190	1.41
21130-191	1.160
21130-191	1.30
21130-191	1.41
21130-192	1.160
21130-192	1.30
21130-192	1.41
21130-198	1.107
21130-198	1.71
21130-200	1.107
21130-200	1.71
21130-201	1.107
21130-202	1.107
21130-202	1.71
21130-203	1.107
21130-203	1.71
21130-204	1.107
21130-204	1.71
21130-205	1.107
21130-205	1.71
21130-206	1.107
21130-206	1.71
21130-207	1.107
21130-207	1.71
21130-211	1.162
21130-212	1.162
21130-213	1.162
21130-213	1.32
21130-214	1.162
21130-215	1.32
21130-217	1.162
21130-217	1.32
21130-218	1.162
21130-218	1.32
21130-219	1.162
21130-219	1.32
21130-220	1.162
21130-220	1.32
21130-221	1.162
21130-221	1.32
21130-222	1.162
21130-222	1.32
21130-231	1.160
21130-232	1.160
21130-232	1.30
21130-233	1.30
21130-234	1.160
21130-234	1.30
21130-235	1.160
21130-235	1.30
21130-236	1.160
21130-236	1.30
21130-241	1.33
21130-241	1.41
21130-242	1.103
21130-242	1.164
21130-242	1.186
21130-242	1.33
21130-242	1.41
21130-242	1.99
21130-243	1.103
21130-243	1.164
21130-243	1.186
21130-243	1.33
21130-243	1.41
21130-243	1.99
21130-244	1.164
21130-244	1.186
21130-245	1.164
21130-245	1.186
21130-246	1.103
21130-246	1.164
21130-246	1.186
21130-246	1.33
21130-246	1.41
21130-246	1.99
21130-247	1.103
21130-247	1.164
21130-247	1.186
21130-247	1.33
21130-247	1.41
21130-247	1.99
21130-248	1.164
21130-248	1.186
21130-249	1.164
21130-249	1.186
21130-252	1.165
21130-252	1.187
21130-252	1.34
21130-253	1.165
21130-253	1.187
21130-253	1.34
21130-254	1.165
21130-254	1.187
21130-255	1.165
21130-255	1.187
21130-256	1.165
21130-256	1.187
21130-256	1.34
21130-257	1.165
21130-257	1.187
21130-257	1.34
21130-258	1.165
21130-258	1.187
21130-259	1.165
21130-259	1.187
21130-261	1.33
21130-262	1.164
21130-262	1.186
21130-262	1.33
21130-263	1.164
21130-263	1.186
21130-263	1.33
21130-264	1.164
21130-264	1.186
21130-265	1.164
21130-265	1.186
21130-266	1.164
21130-266	1.186
21130-266	1.33
21130-267	1.164
21130-267	1.186
21130-267	1.33
21130-268	1.164
21130-268	1.186
21130-269	1.164
21130-269	1.186
21130-272	1.107
21130-272	1.72
21130-273	1.107
21130-273	1.72
21130-275	1.72
21130-276	1.107
21130-276	1.72
21130-277	1.107
21130-277	1.72
21130-281	1.104
21130-281	1.108
21130-281	1.42
21130-281	1.73
21130-282	1.104
21130-282	1.108
21130-282	1.42
21130-282	1.73
21130-283	1.104
21130-283	1.108
21130-283	1.42
21130-283	1.73
21130-284	1.104
21130-284	1.108
21130-284	1.42
21130-284	1.73
21130-285	1.42
21130-287	1.73
21130-291	1.108
21130-291	1.73
21130-292	1.108
21130-292	1.73
21130-293	1.108
21130-293	1.73

Appendix

Part no.	Page
21130-294	1.108
21130-294	1.73
21130-296	1.73
21130-302	1.114
21130-302	1.173
21130-302	1.49
21130-302	1.80
21130-303	1.114
21130-303	1.143
21130-303	1.173
21130-303	1.21
21130-303	1.49
21130-303	1.80
21130-303	1.90
21130-304	1.114
21130-304	1.49
21130-304	1.80
21130-305	1.114
21130-305	1.21
21130-305	1.49
21130-305	1.63
21130-305	1.80
21130-305	1.90
21130-309	1.143
21130-309	1.173
21130-309	1.80
21130-322	1.112
21130-322	1.171
21130-322	1.47
21130-322	1.78
21130-323	1.112
21130-323	1.171
21130-323	1.47
21130-323	1.78
21130-324	1.112
21130-324	1.171
21130-324	1.47
21130-324	1.78
21130-325	1.112
21130-325	1.171
21130-325	1.47
21130-325	1.78
21130-326	1.171
21130-327	1.171
21130-327	1.78
21130-332	1.112
21130-332	1.171
21130-332	1.47
21130-332	1.78
21130-333	1.112
21130-333	1.171
21130-333	1.47
21130-333	1.78
21130-334	1.112
21130-334	1.171
21130-334	1.47
21130-334	1.78
21130-335	1.112
21130-335	1.171
21130-335	1.47
21130-335	1.78
21130-336	1.171
21130-337	1.171
21130-342	1.114
21130-342	1.144
21130-342	1.173
21130-342	1.22
21130-342	1.49
21130-342	1.80
21130-342	1.91
21130-343	1.114
21130-343	1.144
21130-343	1.173
21130-343	1.22
21130-343	1.49
21130-343	1.80
21130-343	1.91
21130-344	1.114
21130-344	1.22
21130-344	1.49
21130-344	1.64
21130-344	1.80
21130-344	1.91
21130-345	1.114
21130-345	1.22
21130-345	1.49
21130-345	1.64
21130-345	1.80
21130-345	1.91
21130-352	1.113
21130-352	1.115
21130-352	1.145
21130-352	1.172
21130-352	1.174
21130-352	1.23
21130-352	1.254
21130-352	1.267
21130-352	1.286
21130-352	1.299
21130-352	1.313
21130-352	1.48
21130-352	1.50
21130-352	1.79
21130-352	1.81
21130-352	1.92
21130-353	1.113
21130-353	1.115
21130-353	1.145
21130-353	1.172
21130-353	1.174
21130-353	1.23
21130-353	1.254
21130-353	1.267
21130-353	1.286
21130-353	1.299
21130-353	1.313
21130-353	1.48
21130-353	1.50
21130-353	1.79
21130-353	1.81
21130-353	1.92
21130-354	1.113
21130-354	1.115
21130-354	1.145
21130-354	1.172
21130-354	1.23
21130-354	1.254
21130-354	1.267
21130-354	1.286
21130-354	1.299
21130-354	1.313
21130-354	1.48
21130-354	1.50
21130-354	1.65
21130-354	1.79
21130-354	1.81
21130-354	1.92
21130-355	1.113
21130-355	1.115
21130-355	1.145
21130-355	1.172
21130-355	1.23
21130-355	1.254
21130-355	1.267
21130-355	1.286
21130-355	1.299
21130-355	1.313
21130-355	1.48
21130-355	1.50
21130-355	1.65
21130-355	1.79
21130-355	1.81
21130-355	1.92
21130-357	1.254
21130-357	1.267
21130-358	1.254
21130-358	1.267
21130-372	1.113
21130-372	1.172
21130-372	1.48
21130-372	1.79
21130-373	1.113
21130-373	1.172
21130-373	1.48
21130-373	1.79
21130-374	1.113
21130-374	1.172
21130-374	1.48
21130-374	1.79
21130-375	1.113
21130-375	1.172
21130-375	1.48
21130-375	1.79
21130-400	1.166
21130-400	1.188
21130-400	1.35
21130-401	1.166
21130-401	1.188
21130-401	1.35
21130-402	1.166
21130-402	1.188
21130-402	1.35
21130-403	1.166
21130-403	1.188
21130-403	1.35
21130-404	1.166
21130-404	1.188
21130-405	1.166
21130-405	1.188
21130-406	1.166
21130-406	1.188
21130-407	1.166
21130-407	1.188
21130-412	1.110
21130-412	1.18
21130-412	1.46
21130-412	1.60
21130-412	1.77
21130-413	1.110
21130-413	1.170
21130-413	1.18
21130-413	1.192
21130-413	1.46
21130-413	1.60
21130-413	1.77
21130-414	1.110
21130-414	1.170
21130-414	1.18
21130-414	1.192
21130-414	1.46
21130-414	1.60
21130-414	1.77
21130-415	1.110
21130-415	1.18
21130-415	1.46
21130-415	1.60
21130-415	1.77
21130-416	1.110
21130-416	1.170
21130-416	1.18

Appendix

Part no.	Page
21130-416	1.192
21130-416	1.46
21130-416	1.60
21130-416	1.77
21130-417	1.110
21130-417	1.170
21130-417	1.18
21130-417	1.192
21130-417	1.46
21130-417	1.60
21130-417	1.77
21130-418	1.110
21130-418	1.170
21130-418	1.192
21130-418	1.46
21130-418	1.77
21130-422	1.110
21130-422	1.46
21130-422	1.77
21130-423	1.110
21130-423	1.170
21130-423	1.192
21130-423	1.46
21130-423	1.77
21130-424	1.110
21130-424	1.170
21130-424	1.192
21130-424	1.46
21130-424	1.77
21130-425	1.110
21130-425	1.46
21130-425	1.77
21130-426	1.110
21130-426	1.170
21130-426	1.192
21130-426	1.46
21130-426	1.77
21130-427	1.110
21130-427	1.170
21130-427	1.192
21130-427	1.46
21130-427	1.77
21130-428	1.110
21130-428	1.170

Part no.	Page
21130-428	1.192
21130-428	1.46
21130-428	1.77
21130-432	1.110
21130-432	1.170
21130-432	1.192
21130-432	1.46
21130-432	1.77
21130-433	1.110
21130-433	1.170
21130-433	1.192
21130-433	1.46
21130-433	1.77
21130-434	1.110
21130-434	1.46
21130-434	1.77
21130-435	1.110
21130-435	1.170
21130-435	1.192
21130-435	1.46
21130-435	1.77
21130-436	1.110
21130-436	1.170
21130-436	1.192
21130-436	1.46
21130-436	1.77
21130-437	1.110
21130-437	1.170
21130-437	1.192
21130-437	1.46
21130-437	1.77
21130-442	1.110
21130-442	1.170
21130-442	1.192
21130-442	1.46
21130-442	1.77
21130-443	1.110
21130-443	1.170
21130-443	1.192
21130-443	1.46
21130-443	1.77
21130-444	1.110
21130-444	1.46
21130-444	1.77

Part no.	Page
21130-445	1.110
21130-445	1.170
21130-445	1.192
21130-445	1.46
21130-445	1.77
21130-446	1.110
21130-446	1.170
21130-446	1.192
21130-446	1.46
21130-446	1.77
21130-447	1.110
21130-447	1.170
21130-447	1.192
21130-447	1.46
21130-447	1.77
21130-452	1.162
21130-453	1.162
21130-454	1.162
21130-454	1.32
21130-455	1.162
21130-456	1.32
21130-458	1.162
21130-458	1.32
21130-459	1.162
21130-459	1.32
21130-460	1.162
21130-460	1.32
21130-461	1.162
21130-461	1.32
21130-462	1.162
21130-462	1.32
21130-463	1.162
21130-463	1.32
21130-472	1.101
21130-472	1.163
21130-472	1.37
21130-473	1.101
21130-473	1.163
21130-473	1.37
21130-478	1.101
21130-478	1.163
21130-478	1.37
21130-479	1.101
21130-479	1.163

Part no.	Page
21130-479	1.37
21130-484	1.162
21130-485	1.162
21130-486	1.162
21130-486	1.32
21130-487	1.162
21130-488	1.32
21130-490	1.162
21130-490	1.32
21130-491	1.162
21130-491	1.32
21130-492	1.162
21130-492	1.32
21130-493	1.162
21130-493	1.32
21130-494	1.162
21130-494	1.32
21130-495	1.162
21130-495	1.32
21130-504	1.105
21130-504	1.43
21130-505	1.105
21130-505	1.43
21130-516	1.159
21130-517	1.159
21130-524	1.159
21130-525	1.159
21130-532	1.159
21130-533	1.159
21130-534	1.159
21130-535	1.159
21130-536	1.159
21130-537	1.159
21130-538	1.164
21130-538	1.186
21130-539	1.164
21130-539	1.186
21130-540	1.164
21130-540	1.186
21130-541	1.164
21130-541	1.186
21130-542	1.165
21130-542	1.187
21130-543	1.165

Part no.	Page
21130-543	1.187
21130-544	1.165
21130-544	1.187
21130-545	1.165
21130-545	1.187
21130-546	1.164
21130-546	1.186
21130-547	1.164
21130-547	1.186
21130-548	1.164
21130-548	1.186
21130-549	1.164
21130-549	1.186
21130-550	1.171
21130-551	1.171
21130-552	1.171
21130-553	1.171
21130-554	1.161
21130-555	1.161
21130-556	1.161
21130-557	1.161
21130-557	1.183
21130-560	1.161
21130-561	1.161
21130-562	1.161
21130-563	1.161
21130-564	1.161
21130-565	1.161
21130-566	1.161
21130-567	1.161
21130-568	1.161
21130-568	1.31
21130-569	1.161
21130-570	1.31
21130-572	1.161
21130-572	1.31
21130-573	1.161
21130-573	1.31
21130-574	1.161
21130-574	1.31
21130-575	1.161
21130-575	1.31
21130-576	1.161
21130-576	1.31

Appendix

Part no.	Page
21130-577	1.161
21130-577	1.31
21130-578	1.109
21130-578	1.74
21130-579	1.109
21130-579	1.74
21130-580	1.109
21130-580	1.74
21130-581	1.109
21130-581	1.74
21130-583	1.204 1.214
21130-585	1.206
21130-585	1.216
21130-588	1.208
21130-588	1.218
21130-589	1.208
21130-589	1.218
21130-590	1.205
21130-590	1.215
21130-591	1.205
21130-591	1.215
21130-594	1.208
21130-594	1.218
21130-596	1.209
21130-596	1.219
21130-597	1.209
21130-597	1.219
21130-598	1.209
21130-598	1.219
21130-610	1.207
21130-610	1.217
21130-611	1.214
21130-611	1.215
21130-611	1.216
21130-611	1.217
21130-612	1.214
21130-612	1.216
21130-612	1.217
21130-613	1.214
21130-613	1.216
21130-613	1.217
21130-614	1.205
21130-614	1.215
21130-615	1.205
21130-615	1.215
21130-616	1.205
21130-616	1.215
21130-617	1.205
21130-617	1.215
21130-618	1.210
21130-618	1.220
21130-619	1.210
21130-619	1.220
21130-620	1.210
21130-620	1.221
21130-621	1.210
21130-621	1.221
21130-622	1.210
21130-622	1.220
21130-623	1.210
21130-623	1.221
21130-624	1.210
21130-624	1.220
21130-625	1.210
21130-625	1.220
21130-626	1.210
21130-626	1.220
21130-627	1.210
21130-627	1.220
21130-628	1.210
21130-628	1.220
21130-629	1.210
21130-629	1.221
21130-630	1.210
21130-630	1.221
21130-631	1.210
21130-631	1.220
21130-632	1.210
21130-632	1.220
21130-633	1.210
21130-633	1.220
21130-634	1.210
21130-634	1.220
21130-635	1.210
21130-635	1.221
21130-636	1.210
21130-636	1.221
21130-637	1.210
21130-637	1.221
21130-638	1.210
21130-638	1.221
21130-639	1.210
21130-639	1.221
21130-640	1.210
21130-640	1.222
21130-641	1.210
21130-641	1.222
21130-642	1.210
21130-642	1.222
21130-643	1.210
21130-643	1.222
21149-184	1.323
21149-184	1.326
21149-185	1.323
21149-185	1.326
21190-095	1.360
21190-095	2.29
21190-095	3.17
21190-435	2.26
21190-435	2.32
21190-435	2.7
21190-435	3.17
21190-571	1.357
21190-753	3.33
21190-793	1.348
21190-793	1.349
21191-207	8.20
21191-207	8.21
21191-207	8.6
21191-207	8.7
21191-207	8.8
21191-207	8.9
21236-089	2.26
21236-089	2.32
21236-090	2.31
21236-092	2.27
21236-093	1.153
21236-093	1.176
21236-093	1.198
21236-094	2.26
21236-095	2.33
21236-097	2.26
21236-097	2.32
21236-099	2.27
21236-102	2.31
21236-103	2.28
21236-104	2.28
21236-120	2.30
21236-121	2.30
21236-122	2.30
21236-123	2.28
21236-125	2.28
21236-126	2.33
21236-127	2.27
21249-017	1.322
21249-017	1.323
21249-017	1.324
21249-017	1.325
21493-079	3.15
21500-027	6.78
21500-028	6.79
21500-029	6.78
21500-030	6.79
21500-037	6.75
21500-037	6.82
21500-038	6.82
21500-039	6.64
21500-039	6.75
21500-039	6.76
21500-039	6.78
21500-039	6.79
21500-039	6.81
21500-046	6.80
21500-047	6.80
21500-048	6.82
21500-067	6.78
21500-068	6.79
21500-069	6.80
21500-070	6.78
21500-071	6.79
21500-072	6.80
21500-077	6.75
21500-078	6.75
21500-079	6.76
21500-080	6.76
21500-081	6.77
21500-082	6.77
21500-122	6.82
21500-123	6.82
21500-124	6.82
21591-079	8.17
21591-097	8.17
21591-099	8.17
21591-104	8.17
21591-107	8.17
21594-144	8.23
21594-144	8.9
21596-002	8.7
21596-003	8.20
21596-003	8.7
21596-008	8.17
21596-012	8.18
21596-020	8.21
21596-020	8.8
21596-020	8.9
21596-022	8.23
21596-022	8.7
21596-023	8.25
21596-023	8.7
21596-023	8.8
21596-023	8.9
21596-025	8.24
21596-025	8.9
21596-026	8.24
21596-026	8.8
21596-026	8.9
21596-077	8.5
21596-077	8.6
21596-138	8.8
21596-140	8.24
21596-140	8.8
21596-140	8.9
21596-236	8.22
21596-236	8.7
21596-273	8.7
21596-274	8.7
21596-278	8.8
21596-300	8.10
21596-300	8.18
21596-300	8.5

Appendix

Part no.	Page
21596-300	8.6
21596-300	8.7
21596-300	8.8
21596-300	8.9
21596-301	8.10
21596-301	8.18
21596-301	8.6
21596-301	8.7
21596-301	8.8
21596-301	8.9
21596-324	8.14
21596-325	8.14
21596-327	8.8
21596-327	8.9
21596-370	8.4
21596-370	8.5
21596-376	8.13
21596-376	8.15
21596-515	8.23
21596-515	8.4
21596-515	8.5
21596-571	8.38
21596-571	8.39
21596-571	8.43
21596-571	8.44
21596-571	8.45
21596-571	8.50
21596-572	8.38
21596-572	8.39
21596-572	8.43
21596-572	8.44
21596-572	8.45
21596-572	8.50
21850-033	8.55
21850-034	8.55
21850-036	8.54
21850-037	8.55
21850-038	8.53
21850-045	8.46
21850-046	8.41
21850-057	8.62
21850-066	8.62
21850-067	8.62
21850-068	8.62
21850-069	8.62
21850-070	8.62
21850-071	8.62
21850-081	8.46
21850-095	8.53
21850-102	8.64
21850-103	8.64
21850-104	8.64
21850-105	8.64
21850-106	8.64
21850-107	8.64
21850-108	8.65
21850-109	8.65
21850-112	8.53
21850-113	8.54
21850-114	8.54
21850-115	8.55
21850-116	8.55
21850-117	8.55
21850-118	8.55
21850-119	8.55
21850-120	8.55
21990-057	8.21
21990-057	8.6
21990-058	8.20
21990-058	8.6
21990-059	8.23
21990-059	8.6
21990-184	8.22
21990-184	8.8
21990-224	8.10
21990-224	8.21
21990-225	8.10
21990-225	8.21
21990-226	8.10
21990-226	8.25
21990-227	8.10
21990-227	8.22
21990-228	8.10
21990-228	8.23
21990-229	8.10
21990-229	8.23
22114-340	1.315
22114-342	1.315
22114-455	1.282
22114-457	1.282
22114-458	1.282
22114-460	1.282
22114-461	1.282
22114-461	1.359
22114-462	1.282
22117-173	1.291
22117-173	1.303
22117-174	1.291
22117-174	1.303
22117-175	1.291
22117-175	1.303
22117-176	1.291
22117-176	1.303
22117-177	1.291
22117-177	1.303
22117-178	1.291
22117-178	1.303
22117-179	1.291
22117-179	1.303
22117-180	1.291
22117-180	1.303
22117-181	1.291
22117-181	1.303
22117-182	1.291
22117-182	1.303
22117-185	1.291
22117-185	1.303
22117-186	1.291
22117-186	1.303
22117-189	1.292
22117-189	1.304
22117-190	1.292
22117-190	1.304
22117-191	1.292
22117-191	1.304
22117-192	1.292
22117-192	1.304
22117-198	1.304
22117-199	1.304
22117-200	1.304
22117-201	1.292
22117-201	1.304
22117-227	1.291
22117-227	1.303
22117-228	1.291
22117-228	1.303
22117-229	1.291
22117-229	1.303
22117-230	1.291
22117-230	1.303
22117-236	1.303
22117-237	1.303
22117-238	1.303
22117-239	1.291
22117-239	1.303
22117-352	1.297
22117-352	1.309
22117-353	1.297
22117-353	1.309
22117-354	1.297
22117-354	1.309
22117-355	1.297
22117-355	1.309
22117-356	1.297
22117-356	1.309
22117-357	1.297
22117-357	1.309
22117-358	1.297
22117-358	1.309
22117-376	1.287
22117-376	1.297
22117-377	1.287
22117-377	1.297
22117-378	1.297
22117-389	1.309
22117-389	1.312
22117-389	1.314
22117-390	1.309
22117-390	1.312
22117-390	1.314
22117-391	1.309
22117-391	1.312
22117-391	1.314
22117-592	1.291
22117-592	1.303
22117-593	1.291
22117-593	1.303
22117-671	1.299
22117-671	1.312
22117-772	1.290
22117-773	1.290
22117-774	1.290
22117-775	1.290
22117-776	1.290
22117-777	1.290
22117-778	1.290
22117-779	1.290
22117-780	1.290
22117-781	1.290
22117-782	1.302
22117-783	1.302
22117-784	1.302
22117-785	1.302
22117-786	1.302
22117-787	1.302
22117-788	1.302
22117-789	1.302
22117-790	1.302
22117-791	1.302
22117-792	1.302
22117-793	1.302
22117-794	1.302
22117-796	1.302
22117-797	1.302
22117-798	1.279
22117-798	1.293
22117-799	1.305
22117-801	1.294
22117-801	1.306
22117-802	1.294
22117-802	1.306
22117-803	1.294
22117-803	1.306
22117-804	1.306
22117-806	1.294
22117-806	1.306
22117-807	1.294
22117-807	1.306
22117-808	1.294
22117-808	1.306

Appendix

Part no.	Page	Part no.	Page	Part no.	Page	Part no.	Page	Part no.	Page
22117-809	1.306	**22117-835**	1.309	**22117-866**	1.296	**22117-949**	1.304	**22117-979**	1.290
22117-811	1.295	**22117-836**	1.297	**22117-866**	1.308	**22117-950**	1.304	**22117-980**	1.290
22117-811	1.307	**22117-836**	1.309	**22117-867**	1.308	**22117-951**	1.279	**22117-981**	1.290
22117-812	1.295	**22117-837**	1.297	**22117-868**	1.308	**22117-951**	1.292	**22117-982**	1.290
22117-812	1.307	**22117-837**	1.309	**22117-869**	1.281	**22117-951**	1.304	**22117-983**	1.290
22117-813	1.295	**22117-838**	1.297	**22117-869**	1.296	**22117-952**	1.304	**22117-984**	1.290
22117-813	1.307	**22117-838**	1.309	**22117-869**	1.308	**22117-957**	1.304	**22117-985**	1.302
22117-814	1.307	**22117-839**	1.309	**22117-934**	1.278	**22117-958**	1.291	**22117-986**	1.302
22117-821	1.294	**22117-839**	1.312	**22117-935**	1.278	**22117-958**	1.303	**22117-987**	1.302
22117-821	1.295	**22117-840**	1.309	**22117-935**	1.292	**22117-959**	1.291	**22117-988**	1.302
22117-821	1.306	**22117-840**	1.312	**22117-935**	1.304	**22117-959**	1.303	**22117-989**	1.302
22117-821	1.307	**22117-842**	1.285	**22117-936**	1.278	**22117-960**	1.291	**22117-990**	1.302
22117-822	1.294	**22117-842**	1.299	**22117-936**	1.292	**22117-960**	1.303	**22117-991**	1.302
22117-822	1.295	**22117-842**	1.312	**22117-936**	1.304	**22117-961**	1.291	**22117-992**	1.302
22117-822	1.306	**22117-843**	1.285	**22117-937**	1.278	**22117-961**	1.303	**22117-993**	1.291
22117-822	1.307	**22117-843**	1.299	**22117-937**	1.292	**22117-962**	1.291	**22117-993**	1.303
22117-823	1.294	**22117-843**	1.312	**22117-937**	1.304	**22117-962**	1.303	**22117-994**	1.291
22117-823	1.295	**22117-844**	1.299	**22117-938**	1.278	**22117-963**	1.291	**22117-994**	1.303
22117-823	1.306	**22117-844**	1.312	**22117-938**	1.292	**22117-963**	1.303	**22117-995**	1.291
22117-823	1.307	**22117-845**	1.299	**22117-938**	1.304	**22117-964**	1.291	**22117-995**	1.303
22117-824	1.306	**22117-845**	1.312	**22117-939**	1.304	**22117-964**	1.303	**22117-996**	1.291
22117-824	1.307	**22117-846**	1.314	**22117-940**	1.278	**22117-965**	1.291	**22117-996**	1.303
22117-825	1.306	**22117-847**	1.314	**22117-940**	1.292	**22117-965**	1.303	**22117-997**	1.291
22117-825	1.307	**22117-848**	1.314	**22117-940**	1.304	**22117-966**	1.291	**22117-997**	1.303
22117-826	1.280	**22117-849**	1.314	**22117-941**	1.304	**22117-966**	1.303	**22117-998**	1.291
22117-826	1.296	**22117-850**	1.314	**22117-942**	1.278	**22117-967**	1.291	**22117-998**	1.303
22117-826	1.308	**22117-851**	1.314	**22117-942**	1.292	**22117-967**	1.303	**22117-999**	1.291
22117-827	1.280	**22117-852**	1.314	**22117-942**	1.304	**22117-968**	1.291	**22117-999**	1.303
22117-827	1.296	**22117-853**	1.314	**22117-943**	1.279	**22117-968**	1.303	**22127-094**	1.298
22117-827	1.308	**22117-854**	1.314	**22117-944**	1.279	**22117-969**	1.291	**22127-094**	1.311
22117-828	1.296	**22117-855**	1.315	**22117-944**	1.292	**22117-969**	1.303	**22127-095**	1.298
22117-828	1.308	**22117-856**	1.315	**22117-944**	1.304	**22117-970**	1.291	**22127-095**	1.311
22117-829	1.308	**22117-858**	1.315	**22117-945**	1.279	**22117-970**	1.303	**22127-096**	1.298
22117-830	1.280	**22117-859**	1.315	**22117-945**	1.292	**22117-971**	1.291	**22127-096**	1.311
22117-830	1.296	**22117-860**	1.315	**22117-945**	1.304	**22117-971**	1.303	**22130-001**	1.181
22117-830	1.308	**22117-861**	1.315	**22117-946**	1.279	**22117-972**	1.291	**22130-002**	1.181
22117-831	1.280	**22117-862**	1.315	**22117-946**	1.292	**22117-972**	1.303	**22130-003**	1.103
22117-831	1.296	**22117-863**	1.315	**22117-946**	1.304	**22117-973**	1.292	**22130-003**	1.181
22117-831	1.308	**22117-864**	1.281	**22117-947**	1.279	**22117-973**	1.304	**22130-003**	1.29
22117-832	1.296	**22117-864**	1.296	**22117-947**	1.292	**22117-975**	1.292	**22130-003**	1.41
22117-832	1.308	**22117-864**	1.308	**22117-947**	1.304	**22117-975**	1.304	**22130-003**	1.99
22117-833	1.308	**22117-865**	1.281	**22117-948**	1.304	**22117-976**	1.304	**22130-004**	1.103
22117-834	1.308	**22117-865**	1.296	**22117-949**	1.279	**22117-977**	1.290	**22130-004**	1.181
22117-835	1.297	**22117-865**	1.308	**22117-949**	1.292	**22117-978**	1.290	**22130-004**	1.29

Appendix

Part no.	Page
22130-004	1.41
22130-004	1.99
22130-005	1.103
22130-005	1.29
22130-005	1.41
22130-005	1.99
22130-006	1.103
22130-006	1.29
22130-006	1.41
22130-006	1.99
22130-007	1.103
22130-007	1.181
22130-007	1.29
22130-007	1.41
22130-007	1.99
22130-008	1.103
22130-008	1.181
22130-008	1.29
22130-008	1.41
22130-008	1.99
22130-009	1.29
22130-009	1.41
22130-010	1.103
22130-010	1.181
22130-010	1.29
22130-010	1.41
22130-010	1.99
22130-011	1.103
22130-011	1.181
22130-011	1.29
22130-011	1.41
22130-011	1.99
22130-012	1.181
22130-013	1.181
22130-014	1.29
22130-014	1.41
22130-015	1.103
22130-015	1.181
22130-015	1.29
22130-015	1.41
22130-015	1.99
22130-016	1.103
22130-016	1.181
22130-016	1.29
22130-016	1.41
22130-016	1.99
22130-017	1.181
22130-018	1.181
22130-023	1.107
22130-023	1.71
22130-024	1.107
22130-024	1.71
22130-025	1.107
22130-025	1.71
22130-026	1.107
22130-026	1.71
22130-027	1.107
22130-027	1.71
22130-028	1.107
22130-028	1.71
22130-030	1.107
22130-030	1.71
22130-031	1.107
22130-031	1.71
22130-033	1.71
22130-035	1.107
22130-035	1.71
22130-036	1.107
22130-036	1.71
22130-038	1.71
22130-041	1.181
22130-042	1.181
22130-043	1.181
22130-043	1.29
22130-044	1.181
22130-044	1.29
22130-045	1.29
22130-046	1.29
22130-047	1.181
22130-047	1.29
22130-048	1.181
22130-048	1.29
22130-049	1.29
22130-050	1.181
22130-050	1.29
22130-051	1.181
22130-051	1.29
22130-052	1.181
22130-053	1.181
22130-054	1.29
22130-055	1.181
22130-055	1.29
22130-056	1.181
22130-056	1.29
22130-057	1.181
22130-058	1.181
22130-061	1.185
22130-062	1.185
22130-063	1.103
22130-063	1.185
22130-063	1.29
22130-063	1.41
22130-063	1.99
22130-064	1.185
22130-065	1.103
22130-065	1.29
22130-065	1.41
22130-065	1.99
22130-067	1.103
22130-067	1.185
22130-067	1.29
22130-067	1.41
22130-067	1.99
22130-068	1.103
22130-068	1.29
22130-068	1.185
22130-068	1.41
22130-068	1.99
22130-069	1.103
22130-069	1.185
22130-069	1.29
22130-069	1.41
22130-069	1.99
22130-070	1.103
22130-070	1.185
22130-070	1.29
22130-070	1.41
22130-070	1.99
22130-071	1.103
22130-071	1.185
22130-071	1.29
22130-071	1.41
22130-071	1.99
22130-072	1.103
22130-072	1.185
22130-072	1.29
22130-072	1.41
22130-072	1.99
22130-078	1.107
22130-078	1.71
22130-080	1.107
22130-080	1.71
22130-081	1.107
22130-082	1.107
22130-082	1.71
22130-083	1.107
22130-083	1.71
22130-084	1.107
22130-084	1.71
22130-085	1.107
22130-085	1.71
22130-086	1.107
22130-086	1.71
22130-087	1.107
22130-087	1.71
22130-091	1.185
22130-092	1.185
22130-093	1.185
22130-093	1.29
22130-094	1.185
22130-095	1.29
22130-097	1.185
22130-097	1.29
22130-098	1.185
22130-098	1.29
22130-099	1.185
22130-099	1.29
22130-100	1.185
22130-100	1.29
22130-101	1.185
22130-101	1.29
22130-102	1.185
22130-102	1.29
22130-106	1.183
22130-107	1.183
22130-108	1.183
22130-108	1.31
22130-109	1.183
22130-110	1.31
22130-112	1.183
22130-112	1.31
22130-113	1.183
22130-113	1.31
22130-114	1.183
22130-114	1.31
22130-115	1.183
22130-115	1.31
22130-116	1.183
22130-116	1.31
22130-117	1.183
22130-117	1.31
22130-121	1.182
22130-122	1.182
22130-123	1.182
22130-123	1.30
22130-124	1.182
22130-125	1.30
22130-127	1.182
22130-127	1.30
22130-128	1.182
22130-128	1.30
22130-129	1.182
22130-129	1.30
22130-130	1.182
22130-130	1.30
22130-131	1.182
22130-131	1.30
22130-132	1.182
22130-132	1.30
22130-136	1.183
22130-137	1.183
22130-138	1.183
22130-138	1.31
22130-139	1.183
22130-140	1.31
22130-142	1.183
22130-142	1.31
22130-143	1.183
22130-143	1.31
22130-144	1.183

Appendix

Part no.	Page
22130-144	1.31
22130-145	1.183
22130-145	1.31
22130-146	1.183
22130-146	1.31
22130-147	1.183
22130-147	1.31
22130-151	1.183
22130-152	1.183
22130-153	1.103
22130-153	1.183
22130-153	1.31
22130-153	1.41
22130-153	1.99
22130-154	1.183
22130-155	1.103
22130-155	1.31
22130-155	1.41
22130-155	1.99
22130-157	1.103
22130-157	1.183
22130-157	1.31
22130-157	1.41
22130-157	1.99
22130-158	1.103
22130-158	1.183
22130-158	1.31
22130-158	1.41
22130-158	1.99
22130-159	1.103
22130-159	1.183
22130-159	1.31
22130-159	1.41
22130-159	1.99
22130-160	1.103
22130-160	1.183
22130-160	1.31
22130-160	1.41
22130-160	1.99
22130-161	1.103
22130-161	1.183
22130-161	1.31
22130-161	1.41
22130-161	1.99
22130-162	1.103
22130-162	1.183
22130-162	1.31
22130-162	1.41
22130-162	1.99
22130-168	1.107
22130-168	1.71
22130-170	1.71
22130-171	1.107
22130-172	1.71
22130-173	1.71
22130-174	1.71
22130-175	1.107
22130-175	1.71
22130-176	1.107
22130-176	1.71
22130-177	1.107
22130-177	1.71
22130-181	1.182
22130-182	1.182
22130-183	1.182
22130-183	1.30
22130-183	1.41
22130-184	1.182
22130-185	1.30
22130-185	1.41
22130-187	1.182
22130-187	1.30
22130-187	1.41
22130-188	1.182
22130-188	1.30
22130-188	1.41
22130-189	1.182
22130-189	1.30
22130-189	1.41
22130-190	1.182
22130-190	1.30
22130-190	1.41
22130-191	1.182
22130-191	1.30
22130-191	1.41
22130-192	1.182
22130-192	1.30
22130-192	1.41
22130-198	1.107
22130-198	1.71
22130-200	1.71
22130-201	1.107
22130-202	1.71
22130-203	1.71
22130-204	1.71
22130-205	1.107
22130-205	1.71
22130-206	1.107
22130-206	1.71
22130-207	1.107
22130-207	1.71
22130-211	1.184
22130-212	1.184
22130-213	1.184
22130-213	1.32
22130-214	1.184
22130-215	1.32
22130-217	1.184
22130-217	1.32
22130-218	1.184
22130-218	1.32
22130-219	1.184
22130-219	1.32
22130-220	1.184
22130-220	1.32
22130-221	1.184
22130-221	1.32
22130-222	1.184
22130-222	1.32
22130-231	1.182
22130-232	1.182
22130-232	1.30
22130-233	1.30
22130-234	1.182
22130-234	1.30
22130-235	1.182
22130-235	1.30
22130-236	1.182
22130-236	1.30
22130-302	1.114
22130-302	1.195
22130-302	1.49
22130-302	1.80
22130-303	1.114
22130-303	1.143
22130-303	1.195
22130-303	1.21
22130-303	1.49
22130-303	1.80
22130-303	1.90
22130-304	1.114
22130-304	1.49
22130-304	1.80
22130-305	1.114
22130-305	1.21
22130-305	1.49
22130-305	1.63
22130-305	1.80
22130-305	1.90
22130-309	1.143
22130-309	1.195
22130-309	1.80
22130-322	1.112
22130-322	1.193
22130-322	1.47
22130-322	1.78
22130-323	1.112
22130-323	1.193
22130-323	1.47
22130-323	1.78
22130-324	1.112
22130-324	1.193
22130-324	1.47
22130-324	1.78
22130-325	1.112
22130-325	1.193
22130-325	1.47
22130-325	1.78
22130-326	1.193
22130-327	1.193
22130-327	1.78
22130-332	1.112
22130-332	1.193
22130-332	1.47
22130-332	1.78
22130-333	1.112
22130-333	1.193
22130-333	1.47
22130-333	1.78
22130-334	1.112
22130-334	1.193
22130-334	1.47
22130-334	1.78
22130-335	1.112
22130-335	1.193
22130-335	1.47
22130-335	1.78
22130-336	1.193
22130-337	1.193
22130-342	1.114
22130-342	1.144
22130-342	1.195
22130-342	1.22
22130-342	1.49
22130-342	1.80
22130-342	1.91
22130-343	1.114
22130-343	1.144
22130-343	1.195
22130-343	1.22
22130-343	1.49
22130-343	1.80
22130-343	1.91
22130-344	1.114
22130-344	1.22
22130-344	1.49
22130-344	1.64
22130-344	1.80
22130-344	1.91
22130-345	1.114
22130-345	1.22
22130-345	1.49
22130-345	1.64
22130-345	1.80
22130-345	1.91
22130-352	1.113
22130-352	1.115
22130-352	1.145
22130-352	1.194
22130-352	1.196

Appendix

Part no.	Page
22130-352	1.23
22130-352	1.48
22130-352	1.50
22130-352	1.79
22130-352	1.81
22130-352	1.92
22130-353	1.113
22130-353	1.115
22130-353	1.145
22130-353	1.194
22130-353	1.196
22130-353	1.23
22130-353	1.48
22130-353	1.50
22130-353	1.79
22130-353	1.81
22130-353	1.92
22130-354	1.113
22130-354	1.115
22130-354	1.145
22130-354	1.194
22130-354	1.23
22130-354	1.48
22130-354	1.50
22130-354	1.65
22130-354	1.79
22130-354	1.81
22130-354	1.92
22130-355	1.113
22130-355	1.115
22130-355	1.145
22130-355	1.194
22130-355	1.23
22130-355	1.48
22130-355	1.50
22130-355	1.65
22130-355	1.79
22130-355	1.81
22130-355	1.92
22130-372	1.113
22130-372	1.194
22130-372	1.48
22130-372	1.79
22130-373	1.113
22130-373	1.194
22130-373	1.48
22130-373	1.79
22130-374	1.113
22130-374	1.194
22130-374	1.48
22130-374	1.79
22130-375	1.113
22130-375	1.194
22130-375	1.48
22130-375	1.79
22130-452	1.184
22130-453	1.184
22130-454	1.184
22130-454	1.32
22130-455	1.184
22130-456	1.32
22130-458	1.184
22130-458	1.32
22130-459	1.184
22130-459	1.32
22130-460	1.184
22130-460	1.32
22130-461	1.184
22130-461	1.32
22130-462	1.184
22130-462	1.32
22130-463	1.184
22130-463	1.32
22130-472	1.101
22130-472	1.185
22130-472	1.37
22130-473	1.101
22130-473	1.185
22130-473	1.37
22130-478	1.101
22130-478	1.185
22130-478	1.37
22130-479	1.101
22130-479	1.185
22130-479	1.37
22130-484	1.184
22130-485	1.184
22130-486	1.184
22130-486	1.32
22130-487	1.184
22130-488	1.32
22130-490	1.184
22130-490	1.32
22130-491	1.184
22130-491	1.32
22130-492	1.184
22130-492	1.32
22130-493	1.184
22130-493	1.32
22130-494	1.184
22130-494	1.32
22130-495	1.184
22130-495	1.32
22130-504	1.105
22130-504	1.43
22130-505	1.105
22130-505	1.43
22130-516	1.181
22130-517	1.181
22130-524	1.181
22130-525	1.181
22130-532	1.181
22130-533	1.181
22130-534	1.181
22130-535	1.181
22130-536	1.181
22130-537	1.181
22130-550	1.193
22130-551	1.193
22130-552	1.193
22130-553	1.193
22130-554	1.183
22130-555	1.183
22130-556	1.183
22130-560	1.183
22130-561	1.183
22130-562	1.183
22130-563	1.183
22130-564	1.183
22130-565	1.183
22130-566	1.183
22130-567	1.183
22130-568	1.183
22130-568	1.31
22130-569	1.183
22130-570	1.31
22130-572	1.183
22130-572	1.31
22130-573	1.183
22130-573	1.31
22130-574	1.183
22130-574	1.31
22130-575	1.183
22130-575	1.31
22130-576	1.183
22130-576	1.31
22130-577	1.183
22130-577	1.31
22130-578	1.109
22130-578	1.74
22130-579	1.109
22130-579	1.74
22130-580	1.109
22130-580	1.74
22130-581	1.109
22130-581	1.74
22130-583	1.204
22130-583	1.214
22349-024	1.319
22349-025	1.319
22349-026	1.319
22349-027	1.319
22349-032	1.321
22349-033	1.321
22349-034	1.321
23001-001	10.16
23001-002	10.16
23001-003	10.16
23001-004	10.16
23001-005	10.16
23001-006	10.16
23001-007	10.16
23001-009	10.16
23001-010	10.16
23001-015	10.16
23001-017	10.16
23001-018	10.16
23001-020	10.16
23001-021	10.16
23001-032	10.17
23001-033	10.17
23001-034	10.17
23001-040	10.17
23001-046	10.17
23001-051	10.17
23001-063	10.15
23001-064	10.15
23001-065	10.15
23001-066	10.15
23001-067	10.15
23001-068	10.15
23001-069	10.15
23001-070	10.15
23001-072	10.15
23001-075	10.15
23001-080	10.15
23001-081	10.15
23001-502	10.13
23001-503	10.13
23001-504	10.13
23001-505	10.13
23001-506	10.13
23001-507	10.13
23001-508	10.13
23001-510	10.13
23001-511	10.13
23001-512	10.13
23001-515	10.13
23001-516	10.13
23001-520	10.13
23001-521	10.13
23001-532	10.13
23001-533	10.13
23001-534	10.13
23001-535	10.13
23001-536	10.13
23001-537	10.13
23001-538	10.13
23001-540	10.13
23001-541	10.13

Appendix

Part no.	Page
23001-542	10.13
23001-545	10.13
23001-546	10.13
23001-550	10.13
23001-551	10.13
23001-701	10.14
23001-704	10.14
23001-712	10.14
23001-720	10.14
23001-812	10.12
23001-813	10.12
23001-814	10.12
23001-815	10.12
23006-300	10.6
23006-301	10.6
23006-303	10.6
23006-331	10.6
23006-331	10.7
23006-332	10.6
23006-334	10.6
23006-336	10.6
23006-337	10.6
23006-353	10.6
23006-354	10.6
23006-355	10.6
23006-358	10.6
23006-372	10.6
23006-373	10.6
23006-374	10.6
23006-375	10.6
23006-376	10.6
23006-377	10.6
23006-378	10.6
23006-405	10.7
23006-406	10.7
23006-408	10.7
23006-422	10.7
23006-424	10.7
23006-426	10.7
23006-428	10.7
23006-443	10.7
23006-444	10.7
23006-445	10.7
23006-448	10.7
23006-575	10.11
23006-577	10.11
23006-578	10.11
23006-587	10.11
23006-594	10.11
23006-597	10.11
23006-601	10.8
23006-611	10.8
23006-615	10.8
23006-621	10.8
23006-715	10.7
23006-716	10.7
23006-718	10.7
23006-732	10.7
23006-734	10.7
23006-736	10.7
23006-738	10.7
23006-763	10.7
23006-764	10.7
23006-765	10.7
23006-768	10.7
23006-792	10.8
23006-793	10.8
23006-794	10.8
23006-795	10.8
23006-796	10.8
23006-797	10.8
23006-798	10.8
23006-799	10.8
23006-811	10.6
23006-811	10.7
23006-812	10.6
23006-813	10.6
23006-814	10.6
23006-815	10.6
23006-816	10.6
23006-817	10.6
23006-818	10.6
23006-824	10.10
23006-827	10.10
23006-833	10.6
23006-834	10.6
23006-835	10.6
23006-838	10.6
23006-857	10.10
23006-862	10.6
23006-863	10.6
23006-864	10.6
23006-865	10.6
23006-866	10.6
23006-867	10.6
23006-868	10.6
23006-884	10.10
23006-887	10.10
23006-920	10.9
23006-922	10.9
23006-924	10.11
23006-931	10.6
23006-931	10.7
23007-010	10.19
23007-021	10.19
23007-040	10.19
23007-051	10.19
23007-081	10.19
23007-114	10.19
23007-128	10.19
23007-158	10.19
23007-188	10.19
23007-222	10.19
23007-410	10.19
23007-421	10.19
23007-601	10.5
23007-602	10.5
23007-611	10.4
23007-612	10.4
23007-613	10.4
23007-614	10.4
23007-624	10.4
23007-625	10.4
23021-001	10.25
23021-002	10.25
23021-100	10.25
23021-101	10.25
23021-103	10.25
23021-603	10.21
23021-604	10.22
23021-605	10.23
23021-607	10.20
23021-608	10.21
23021-609	10.21
23021-610	10.21
23021-611	10.22
23021-613	10.23
23021-615	10.24
23021-616	10.23
23021-621	10.24
23021-651	10.20
23021-652	10.21
23021-653	10.21
23021-654	10.21
23021-655	10.22
23021-656	10.22
23021-657	10.23
23021-658	10.24
23021-660	10.23
23021-700	10.21
23021-701	10.21
23021-750	10.21
23022-002	10.25
23022-004	10.25
23022-010	10.25
23022-601	10.21
23022-602	10.21
23022-603	10.21
23022-604	10.23
23022-652	10.21
23022-700	10.21
23040-001	10.26
23098-100	10.18
23098-100	10.6
23098-105	10.18
23098-105	9.22
23098-105	9.26
23098-115	10.18
23098-115	9.22
23098-115	9.26
23098-116	10.18
23098-116	9.22
23098-116	9.23
23098-116	9.26
23098-116	9.27
23098-117	10.18
23098-117	9.22
23098-117	9.26
23117-001	1.291
23117-001	1.303
23117-002	1.291
23117-002	1.303
23117-003	1.291
23117-003	1.303
23117-004	1.291
23117-004	1.303
23117-005	1.291
23117-005	1.303
23117-006	1.291
23117-006	1.303
23117-007	1.291
23117-007	1.303
23117-008	1.291
23117-008	1.303
23117-009	1.291
23117-009	1.303
23117-010	1.291
23117-010	1.303
23117-011	1.279
23117-011	1.292
23117-011	1.304
23117-012	1.278
23117-012	1.292
23117-012	1.304
23117-013	1.292
23117-013	1.304
23117-014	1.292
23117-014	1.304
23117-015	1.292
23117-015	1.304
23117-016	1.304
23117-017	1.297
23117-017	1.309
23117-018	1.297
23117-018	1.309
23117-019	1.297
23117-019	1.309
23117-020	1.287
23117-020	1.297
23117-020	1.310

Appendix

Part no.	Page
23117-021	1.287
23117-021	1.297
23117-021	1.310
23117-022	1.287
23117-022	1.297
23117-022	1.310
23117-023	1.287
23117-023	1.297
23117-023	1.310
23117-024	1.287
23117-024	1.297
23117-024	1.310
23117-025	1.287
23117-025	1.297
23117-025	1.310
23117-026	1.287
23117-026	1.297
23117-026	1.310
23117-027	1.287
23117-027	1.297
23117-027	1.310
23117-028	1.287
23117-028	1.297
23117-028	1.310
23117-029	1.287
23117-029	1.297
23117-029	1.310
23117-030	1.287
23117-030	1.297
23117-030	1.310
23117-031	1.287
23117-031	1.297
23117-031	1.310
23130-001	1.100
23130-001	1.104
23130-001	1.135
23130-001	1.15
23130-001	1.167
23130-001	1.189
23130-001	1.36
23130-001	1.42
23130-002	1.100
23130-002	1.104
23130-002	1.135

Part no.	Page
23130-002	1.15
23130-002	1.167
23130-002	1.189
23130-002	1.36
23130-002	1.42
23130-003	1.135
23130-003	1.167
23130-003	1.189
23130-004	1.135
23130-004	1.167
23130-004	1.189
23130-005	1.100
23130-005	1.104
23130-005	1.135
23130-005	1.167
23130-005	1.189
23130-005	1.36
23130-005	1.42
23130-006	1.100
23130-006	1.104
23130-006	1.135
23130-006	1.167
23130-006	1.189
23130-006	1.36
23130-006	1.42
23130-007	1.135
23130-007	1.167
23130-007	1.189
23130-008	1.135
23130-008	1.167
23130-008	1.189
23130-009	1.36
23130-009	1.42
23130-011	1.140
23130-011	1.169
23130-011	1.19
23130-011	1.61
23130-011	1.88
23130-012	1.111
23130-012	1.140
23130-012	1.169
23130-012	1.19
23130-012	1.44
23130-012	1.61

Part no.	Page
23130-012	1.75
23130-012	1.88
23130-013	1.111
23130-013	1.140
23130-013	1.19
23130-013	1.44
23130-013	1.61
23130-013	1.75
23130-013	1.88
23130-014	1.111
23130-014	1.140
23130-014	1.169
23130-014	1.19
23130-014	1.44
23130-014	1.61
23130-014	1.75
23130-014	1.88
23130-015	1.111
23130-015	1.140
23130-015	1.169
23130-015	1.19
23130-015	1.44
23130-015	1.61
23130-015	1.75
23130-015	1.88
23130-016	1.111
23130-016	1.140
23130-016	1.169
23130-016	1.44
23130-016	1.75
23130-017	1.140
23130-017	1.19
23130-017	1.61
23130-017	1.88
23130-018	1.140
23130-018	1.19
23130-018	1.61
23130-018	1.88
23130-019	1.140
23130-019	1.19
23130-019	1.61
23130-019	1.88
23130-020	1.140
23130-020	1.19

Part no.	Page
23130-020	1.61
23130-020	1.88
23130-021	1.140
23130-021	1.19
23130-021	1.191
23130-021	1.61
23130-021	1.88
23130-022	1.111
23130-022	1.140
23130-022	1.19
23130-022	1.191
23130-022	1.44
23130-022	1.61
23130-022	1.75
23130-022	1.88
23130-023	1.111
23130-023	1.140
23130-023	1.19
23130-023	1.44
23130-023	1.61
23130-023	1.75
23130-023	1.88
23130-024	1.111
23130-024	1.140
23130-024	1.19
23130-024	1.191
23130-024	1.44
23130-024	1.61
23130-024	1.75
23130-024	1.88
23130-025	1.111
23130-025	1.140
23130-025	1.19
23130-025	1.191
23130-025	1.44
23130-025	1.61
23130-025	1.75
23130-025	1.88
23130-026	1.111
23130-026	1.140
23130-026	1.191
23130-026	1.44
23130-026	1.75
23130-027	1.140

Part no.	Page
23130-027	1.19
23130-027	1.61
23130-027	1.88
23130-028	1.140
23130-028	1.19
23130-028	1.61
23130-028	1.88
23130-029	1.140
23130-029	1.19
23130-029	1.61
23130-029	1.88
23130-030	1.140
23130-030	1.19
23130-030	1.61
23130-030	1.88
23130-031	1.140
23130-031	1.169
23130-031	1.19
23130-031	1.191
23130-031	1.61
23130-031	1.88
23130-032	1.111
23130-032	1.140
23130-032	1.169
23130-032	1.19
23130-032	1.191
23130-032	1.44
23130-032	1.61
23130-032	1.75
23130-032	1.88
23130-033	1.111
23130-033	1.140
23130-033	1.19
23130-033	1.44
23130-033	1.61
23130-033	1.75
23130-033	1.88
23130-034	1.111
23130-034	1.140
23130-034	1.169
23130-034	1.19
23130-034	1.191
23130-034	1.44
23130-034	1.61

Appendix

Part no.	Page	Part no.	Page	Part no.	Page	Part no.	Page	Part no.	Page
23130-034	1.75	**23130-056**	1.45	**23130-072**	1.164	**23130-077**	1.180	**23130-082**	1.191
23130-034	1.88	**23130-056**	1.76	**23130-072**	1.165	**23130-077**	1.28	**23130-082**	1.193
23130-035	1.111	**23130-061**	1.158	**23130-072**	1.186	**23130-077**	1.40	**23130-082**	1.24
23130-035	1.140	**23130-061**	1.180	**23130-072**	1.187	**23130-077**	1.56	**23130-082**	1.47
23130-035	1.169	**23130-061**	1.28	**23130-072**	1.228	**23130-077**	1.57	**23130-082**	1.51
23130-035	1.19	**23130-061**	1.98	**23130-072**	1.229	**23130-077**	1.58	**23130-082**	1.66
23130-035	1.191	**23130-062**	1.102	**23130-072**	1.230	**23130-077**	1.70	**23130-082**	1.78
23130-035	1.44	**23130-062**	1.28	**23130-072**	1.232	**23130-078**	1.12	**23130-082**	1.82
23130-035	1.61	**23130-062**	1.40	**23130-072**	1.33	**23130-078**	1.13	**23130-082**	1.93
23130-035	1.75	**23130-063**	1.106	**23130-072**	1.34	**23130-078**	1.132	**23130-083**	1.141
23130-035	1.88	**23130-063**	1.70	**23130-072**	1.41	**23130-078**	1.14	**23130-083**	1.169
23130-036	1.111	**23130-064**	1.102	**23130-072**	1.56	**23130-078**	1.158	**23130-083**	1.191
23130-036	1.140	**23130-064**	1.40	**23130-072**	1.57	**23130-078**	1.180	**23130-084**	1.141
23130-036	1.169	**23130-065**	1.106	**23130-072**	1.72	**23130-078**	1.28	**23130-084**	1.169
23130-036	1.191	**23130-065**	1.70	**23130-072**	1.87	**23130-078**	1.40	**23130-084**	1.191
23130-036	1.44	**23130-067**	1.12	**23130-072**	1.99	**23130-078**	1.56	**23130-084**	1.82
23130-036	1.75	**23130-067**	1.13	**23130-073**	1.104	**23130-078**	1.57	**23130-085**	1.12
23130-037	1.140	**23130-067**	1.15	**23130-073**	1.42	**23130-078**	1.58	**23130-085**	1.13
23130-037	1.19	**23130-067**	1.160	**23130-074**	1.100	**23130-078**	1.70	**23130-085**	1.164
23130-037	1.61	**23130-067**	1.161	**23130-074**	1.135	**23130-079**	1.158	**23130-085**	1.186
23130-037	1.88	**23130-067**	1.182	**23130-074**	1.136	**23130-079**	1.180	**23130-085**	1.33
23130-038	1.140	**23130-067**	1.183	**23130-074**	1.15	**23130-079**	1.28	**23130-085**	1.86
23130-038	1.19	**23130-067**	1.30	**23130-074**	1.167	**23130-079**	1.40	**23130-086**	1.117
23130-038	1.61	**23130-067**	1.31	**23130-074**	1.189	**23130-079**	1.70	**23130-086**	1.151
23130-038	1.88	**23130-067**	2.28	**23130-074**	1.36	**23130-081**	1.112	**23130-086**	1.176
23130-039	1.140	**23130-068**	1.164	**23130-075**	1.100	**23130-081**	1.116	**23130-086**	1.198
23130-039	1.19	**23130-068**	1.186	**23130-075**	1.135	**23130-081**	1.141	**23130-086**	1.24
23130-039	1.61	**23130-068**	1.33	**23130-075**	1.15	**23130-081**	1.169	**23130-086**	1.52
23130-039	1.88	**23130-069**	1.134	**23130-075**	1.167	**23130-081**	1.17	**23130-086**	1.83
23130-040	1.140	**23130-069**	1.165	**23130-075**	1.189	**23130-081**	1.171	**23130-086**	1.93
23130-040	1.19	**23130-069**	1.187	**23130-075**	1.36	**23130-081**	1.191	**23130-087**	1.117
23130-040	1.61	**23130-069**	1.34	**23130-076**	1.100	**23130-081**	1.193	**23130-087**	1.151
23130-040	1.88	**23130-070**	1.133	**23130-076**	1.104	**23130-081**	1.24	**23130-087**	1.176
23130-050	1.155	**23130-070**	1.165	**23130-076**	1.135	**23130-081**	1.47	**23130-087**	1.198
23130-050	1.177	**23130-070**	1.187	**23130-076**	1.15	**23130-081**	1.51	**23130-087**	1.24
23130-050	1.199	**23130-070**	1.34	**23130-076**	1.167	**23130-081**	1.78	**23130-087**	1.52
23130-052	1.45	**23130-071**	1.134	**23130-076**	1.189	**23130-081**	1.82	**23130-087**	1.66
23130-052	1.76	**23130-071**	1.165	**23130-076**	1.36	**23130-081**	1.93	**23130-087**	1.83
23130-053	1.45	**23130-071**	1.187	**23130-076**	1.42	**23130-082**	1.112	**23130-087**	1.93
23130-053	1.76	**23130-071**	1.34	**23130-077**	1.12	**23130-082**	1.116	**23130-088**	1.151
23130-054	1.45	**23130-072**	1.103	**23130-077**	1.13	**23130-082**	1.141	**23130-088**	1.176
23130-054	1.76	**23130-072**	1.107	**23130-077**	1.132	**23130-082**	1.169	**23130-088**	1.198
23130-055	1.45	**23130-072**	1.133	**23130-077**	1.14	**23130-082**	1.17	**23130-089**	1.151
23130-055	1.76	**23130-072**	1.14	**23130-077**	1.158	**23130-082**	1.171	**23130-089**	1.176

Appendix

Part no.	Page	Part no.	Page	Part no.	Page	Part no.	Page	Part no.	Page
23130-089	1.198	**23130-096**	1.142	**23130-120**	1.142	**23130-140**	1.172	**23130-160**	1.192
23130-089	1.83	**23130-096**	1.175	**23130-120**	1.175	**23130-140**	1.173	**23130-160**	1.46
23130-090	1.166	**23130-096**	1.197	**23130-120**	1.197	**23130-140**	1.174	**23130-160**	1.77
23130-090	1.188	**23130-096**	1.20	**23130-120**	1.82	**23130-140**	1.194	**23130-164**	1.101
23130-090	1.35	**23130-096**	1.51	**23130-123**	1.142	**23130-140**	1.195	**23130-164**	1.163
23130-090	1.58	**23130-096**	1.82	**23130-123**	1.175	**23130-140**	1.196	**23130-164**	1.185
23130-090	1.72	**23130-096**	1.89	**23130-123**	1.197	**23130-140**	1.22	**23130-164**	1.37
23130-091	1.111	**23130-097**	1.116	**23130-123**	1.20	**23130-140**	1.23	**23130-165**	1.133
23130-091	1.140	**23130-097**	1.20	**23130-123**	1.89	**23130-140**	1.48	**23130-165**	1.158
23130-091	1.169	**23130-097**	1.51	**23130-124**	1.20	**23130-140**	1.49	**23130-165**	1.159
23130-091	1.191	**23130-097**	1.62	**23130-124**	1.62	**23130-140**	1.50	**23130-165**	1.166
23130-091	1.44	**23130-097**	1.82	**23130-124**	1.89	**23130-140**	1.64	**23130-165**	1.188
23130-091	1.75	**23130-097**	1.89	**23130-125**	1.142	**23130-140**	1.65	**23130-165**	1.190
23130-092	1.113	**23130-098**	1.142	**23130-125**	1.175	**23130-140**	1.79	**23130-165**	1.35
23130-092	1.115	**23130-098**	1.175	**23130-125**	1.197	**23130-140**	1.80	**23130-165**	1.72
23130-092	1.145	**23130-098**	1.197	**23130-132**	1.159	**23130-140**	1.81	**23130-166**	1.36
23130-092	1.172	**23130-098**	1.82	**23130-132**	1.181	**23130-140**	1.91	**23130-166**	1.42
23130-092	1.174	**23130-099**	1.51	**23130-132**	1.29	**23130-140**	1.92	**23130-169**	1.137
23130-092	1.194	**23130-101**	1.142	**23130-133**	1.163	**23130-141**	1.132	**23130-169**	1.16
23130-092	1.196	**23130-101**	1.175	**23130-133**	1.185	**23130-149**	1.152	**23130-169**	1.168
23130-092	1.23	**23130-101**	1.197	**23130-133**	1.29	**23130-149**	1.159	**23130-169**	1.190
23130-092	1.254	**23130-101**	1.20	**23130-134**	1.100	**23130-149**	1.181	**23130-169**	1.36
23130-092	1.267	**23130-101**	1.89	**23130-134**	1.135	**23130-150**	1.152	**23130-169**	1.42
23130-092	1.286	**23130-102**	1.20	**23130-134**	1.136	**23130-150**	1.159	**23130-169**	1.73
23130-092	1.299	**23130-102**	1.62	**23130-134**	1.167	**23130-150**	1.181	**23130-170**	1.137
23130-092	1.313	**23130-102**	1.89	**23130-134**	1.189	**23130-151**	1.152	**23130-170**	1.16
23130-092	1.48	**23130-103**	1.142	**23130-134**	1.36	**23130-151**	1.159	**23130-170**	1.168
23130-092	1.50	**23130-103**	1.175	**23130-135**	1.100	**23130-151**	1.181	**23130-170**	1.190
23130-092	1.65	**23130-103**	1.197	**23130-135**	1.135	**23130-153**	1.210	**23130-170**	1.36
23130-092	1.79	**23130-116**	1.51	**23130-135**	1.167	**23130-153**	1.222	**23130-170**	1.42
23130-092	1.81	**23130-118**	1.116	**23130-135**	1.189	**23130-158**	1.110	**23130-170**	1.59
23130-092	1.92	**23130-118**	1.142	**23130-135**	1.36	**23130-158**	1.170	**23130-170**	1.73
23130-094	1.116	**23130-118**	1.175	**23130-136**	1.100	**23130-158**	1.18	**23130-171**	1.137
23130-094	1.142	**23130-118**	1.197	**23130-136**	1.104	**23130-158**	1.192	**23130-171**	1.168
23130-094	1.175	**23130-118**	1.20	**23130-136**	1.135	**23130-158**	1.46	**23130-171**	1.190
23130-094	1.197	**23130-118**	1.51	**23130-136**	1.167	**23130-158**	1.60	**23130-172**	1.137
23130-094	1.51	**23130-118**	1.82	**23130-136**	1.189	**23130-158**	1.77	**23130-172**	1.168
23130-094	1.82	**23130-118**	1.89	**23130-136**	1.36	**23130-159**	1.110	**23130-172**	1.190
23130-094	2.31	**23130-119**	1.116	**23130-136**	1.42	**23130-159**	1.170	**23130-172**	1.73
23130-095	1.142	**23130-119**	1.20	**23130-140**	1.113	**23130-159**	1.192	**23130-187**	1.137
23130-095	1.175	**23130-119**	1.51	**23130-140**	1.114	**23130-159**	1.46	**23130-187**	1.16
23130-095	1.197	**23130-119**	1.62	**23130-140**	1.115	**23130-159**	1.77	**23130-187**	1.168
23130-095	2.31	**23130-119**	1.82	**23130-140**	1.144	**23130-160**	1.110	**23130-187**	1.190
23130-096	1.116	**23130-119**	1.89	**23130-140**	1.145	**23130-160**	1.170	**23130-187**	1.36

Appendix

Part no.	Page	Part no.	Page	Part no.	Page	Part no.	Page	Part no.	Page
23130-187	1.42	**23130-214**	1.168	**23130-329**	1.150	**23130-345**	1.190	**23130-362**	1.168
23130-187	1.59	**23130-214**	1.190	**23130-329**	1.176	**23130-346**	1.139	**23130-362**	1.190
23130-187	1.73	**23130-215**	1.138	**23130-329**	1.198	**23130-346**	1.168	**23130-363**	1.137
23130-194	1.137	**23130-215**	1.168	**23130-330**	1.150	**23130-346**	1.190	**23130-363**	1.168
23130-194	1.168	**23130-215**	1.190	**23130-330**	1.176	**23130-347**	1.168	**23130-363**	1.190
23130-194	1.190	**23130-220**	1.160	**23130-330**	1.198	**23130-347**	1.190	**23130-364**	1.169
23130-194	1.36	**23130-221**	1.160	**23130-331**	1.176	**23130-348**	1.139	**23130-364**	1.191
23130-194	1.42	**23130-221**	1.30	**23130-331**	1.198	**23130-348**	1.168	**23130-365**	1.141
23130-194	1.73	**23130-222**	1.30	**23130-332**	1.150	**23130-348**	1.190	**23130-365**	1.169
23130-208	1.138	**23130-223**	1.160	**23130-332**	1.176	**23130-349**	1.139	**23130-365**	1.191
23130-208	1.16	**23130-223**	1.30	**23130-332**	1.198	**23130-349**	1.168	**23130-366**	1.176
23130-208	1.168	**23130-224**	1.160	**23130-333**	1.117	**23130-349**	1.190	**23130-366**	1.198
23130-208	1.190	**23130-224**	1.30	**23130-333**	1.154	**23130-350**	1.139	**23130-367**	1.151
23130-208	1.36	**23130-225**	1.160	**23130-333**	1.176	**23130-350**	1.168	**23130-367**	1.176
23130-208	1.42	**23130-225**	1.30	**23130-333**	1.198	**23130-350**	1.190	**23130-367**	1.198
23130-208	1.73	**23130-230**	1.182	**23130-333**	1.25	**23130-351**	1.168	**23130-368**	1.168
23130-209	1.138	**23130-231**	1.182	**23130-333**	1.52	**23130-351**	1.190	**23130-368**	1.190
23130-209	1.16	**23130-231**	1.30	**23130-333**	1.83	**23130-352**	1.139	**23130-369**	1.138
23130-209	1.168	**23130-232**	1.30	**23130-333**	1.94	**23130-352**	1.168	**23130-369**	1.168
23130-209	1.190	**23130-233**	1.182	**23130-334**	1.117	**23130-352**	1.190	**23130-369**	1.190
23130-209	1.36	**23130-233**	1.30	**23130-334**	1.154	**23130-353**	1.136	**23130-370**	1.168
23130-209	1.42	**23130-234**	1.182	**23130-334**	1.176	**23130-353**	1.167	**23130-370**	1.190
23130-209	1.59	**23130-234**	1.30	**23130-334**	1.198	**23130-353**	1.189	**23130-371**	1.138
23130-209	1.73	**23130-235**	1.182	**23130-334**	1.25	**23130-354**	1.136	**23130-371**	1.168
23130-210	1.138	**23130-235**	1.30	**23130-334**	1.52	**23130-354**	1.167	**23130-371**	1.190
23130-210	1.168	**23130-274**	1.113	**23130-334**	1.67	**23130-354**	1.189	**23130-372**	1.149
23130-210	1.190	**23130-274**	1.172	**23130-334**	1.83	**23130-355**	1.136	**23130-372**	1.177
23130-211	1.138	**23130-274**	1.194	**23130-335**	1.152	**23130-355**	1.167	**23130-372**	1.199
23130-211	1.168	**23130-274**	1.48	**23130-335**	1.159	**23130-355**	1.189	**23130-373**	1.159
23130-211	1.190	**23130-274**	1.79	**23130-335**	1.181	**23130-356**	1.167	**23130-373**	1.181
23130-211	1.73	**23130-285**	1.148	**23130-336**	1.148	**23130-356**	1.189	**23130-374**	1.136
23130-212	1.138	**23130-310**	1.143	**23130-336**	1.177	**23130-357**	1.136	**23130-374**	1.167
23130-212	1.168	**23130-310**	1.21	**23130-336**	1.199	**23130-357**	1.167	**23130-374**	1.189
23130-212	1.190	**23130-310**	1.63	**23130-341**	1.148	**23130-357**	1.189	**23130-375**	1.136
23130-212	1.36	**23130-310**	1.90	**23130-341**	1.177	**23130-358**	1.167	**23130-375**	1.167
23130-212	1.42	**23130-312**	1.153	**23130-341**	1.199	**23130-358**	1.189	**23130-375**	1.189
23130-212	1.73	**23130-312**	1.176	**23130-342**	1.148	**23130-359**	1.135	**23130-376**	1.167
23130-213	1.138	**23130-312**	1.198	**23130-342**	1.177	**23130-359**	1.167	**23130-376**	1.189
23130-213	1.168	**23130-326**	1.150	**23130-342**	1.199	**23130-359**	1.189	**23130-377**	1.136
23130-213	1.190	**23130-326**	1.176	**23130-343**	1.149	**23130-360**	1.167	**23130-377**	1.167
23130-213	1.36	**23130-326**	1.198	**23130-343**	1.162	**23130-360**	1.189	**23130-377**	1.189
23130-213	1.42	**23130-328**	1.150	**23130-343**	1.184	**23130-361**	1.135	**23130-378**	1.136
23130-213	1.73	**23130-328**	1.176	**23130-345**	1.139	**23130-361**	1.167	**23130-378**	1.167
23130-214	1.138	**23130-328**	1.198	**23130-345**	1.168	**23130-361**	1.189	**23130-378**	1.189

Appendix

Part no.	Page
23130-379	1.149
23130-379	1.162
23130-379	1.184
23130-386	1.127
23130-386	1.129
23130-386	1.131
23130-386	1.139
23130-387	1.137
23130-387	1.16
23130-387	1.59
23130-387	1.73
23130-388	1.137
23130-388	1.73
23130-395	1.72
23130-396	1.72
23130-397	1.72
23130-398	1.72
23130-400	1.108
23130-400	1.73
23130-401	1.108
23130-401	1.73
23130-402	1.108
23130-402	1.73
23130-403	1.108
23130-403	1.73
23130-405	1.112
23130-405	1.17
23130-405	1.47
23130-405	1.76
23130-406	1.112
23130-406	1.47
23130-406	1.76
23130-407	1.112
23130-407	1.17
23130-407	1.47
23130-407	1.76
23130-408	1.112
23130-408	1.47
23130-408	1.76
23130-413	1.112
23130-413	1.17
23130-413	1.47
23130-413	1.76
23130-414	1.112
23130-414	1.47
23130-414	1.76
23130-418	1.112
23130-418	1.17
23130-418	1.47
23130-418	1.76
23130-420	1.152
23130-420	1.159
23130-420	1.181
23130-421	1.152
23130-421	1.159
23130-421	1.181
23130-421	1.221
23130-422	1.152
23130-422	1.159
23130-422	1.181
23130-422	1.221
23130-433	1.208
23130-433	1.218
23130-437	1.204
23130-437	1.214
23130-443	1.72
23130-447	1.73
23130-453	1.206
23130-453	1.207
23130-453	1.216
23130-453	1.217
23130-454	1.102
23130-454	1.106
23130-454	1.98
23130-455	1.102
23130-455	1.106
23130-455	1.98
23130-456	1.102
23130-456	1.106
23130-456	1.98
23130-457	1.102
23130-457	1.106
23130-457	1.98
23130-473	1.205
23130-473	1.215
23130-475	1.211
23130-475	1.223
23130-477	1.211
23130-477	1.223
23130-478	1.211
23130-478	1.223
23130-480	1.211
23130-480	1.223
23130-481	1.211
23130-481	1.223
23130-484	1.211
23130-484	1.223
23130-485	1.211
23130-485	1.223
23204-113	10.13
23204-113	10.14
23204-113	10.4
23204-113	10.5
23204-113	10.6
23204-113	10.7
23204-115	10.13
23204-115	10.14
23204-115	10.15
23204-115	10.16
23204-115	10.6
23204-115	10.7
23204-116	10.13
23204-116	10.14
23204-116	10.15
23204-116	10.16
23204-116	10.6
23204-116	10.7
23204-187	8.10
23204-187	8.18
23204-187	8.6
23204-187	8.7
23204-187	8.8
23204-187	8.9
23204-811	10.15
23204-811	10.16
23204-811	10.4
23204-811	10.5
23204-812	10.15
23204-812	10.16
23204-812	10.4
23204-812	10.5
23204-835	8.50
23207-021	8.106
23207-022	8.107
23207-022	8.87
23207-028	8.106
23207-115	1.228
23207-115	1.229
23207-115	1.230
23207-115	1.234
24127-485	1.329
24127-487	1.329
24127-489	1.329
24127-491	1.329
24127-682	1.328
24127-686	1.328
24127-689	1.328
24127-694	1.328
24127-697	1.328
24496-120	8.110
24496-122	8.110
24560-031	6.45
24560-032	6.45
24560-033	6.45
24560-041	6.45
24560-042	6.45
24560-043	6.45
24560-051	6.45
24560-052	6.45
24560-053	6.45
24560-054	6.45
24560-055	6.45
24560-056	6.45
24560-061	6.44
24560-062	6.44
24560-063	6.44
24560-064	6.44
24560-065	6.44
24560-066	6.44
24560-071	6.44
24560-072	6.44
24560-073	6.44
24560-078	6.12
24560-078	6.44
24560-079	6.12
24560-079	6.44
24560-080	6.12
24560-080	6.44
24560-081	6.12
24560-081	6.44
24560-082	6.44
24560-083	6.44
24560-130	5.34
24560-130	6.20
24560-130	6.21
24560-130	6.22
24560-130	6.23
24560-130	6.24
24560-130	6.25
24560-130	6.28
24560-130	6.30
24560-130	6.31
24560-130	6.32
24560-130	6.65
24560-130	7.110
24560-131	6.65
24560-135	6.47
24560-135	6.65
24560-135	6.83
24560-135	7.110
24560-139	6.55
24560-139	6.65
24560-139	7.109
24560-140	5.28
24560-140	6.103
24560-140	6.111
24560-140	6.55
24560-140	6.66
24560-140	7.111
24560-141	5.40
24560-141	5.41
24560-141	5.42
24560-141	5.73
24560-141	5.74
24560-141	5.92
24560-141	5.93
24560-141	6.105
24560-141	6.106
24560-141	6.12
24560-141	6.124

Appendix

Part no.	Page	Part no.	Page	Part no.	Page	Part no.	Page	Part no.	Page
24560-141	6.13	**24560-155**	6.23	**24560-183**	5.109	**24560-243**	6.83	**24560-255**	6.9
24560-141	6.14	**24560-155**	6.24	**24560-183**	6.25	**24560-245**	6.108	**24560-255**	6.94
24560-141	6.15	**24560-155**	6.28	**24560-184**	5.37	**24560-245**	6.111	**24560-256**	5.42
24560-141	6.36	**24560-155**	6.30	**24560-184**	5.64	**24560-245**	6.44	**24560-256**	6.106
24560-141	6.37	**24560-155**	6.65	**24560-184**	5.94	**24560-245**	6.45	**24560-256**	6.107
24560-141	6.38	**24560-155**	7.110	**24560-184**	6.59	**24560-245**	6.47	**24560-256**	6.14
24560-141	6.39	**24560-157**	5.41	**24560-197**	6.20	**24560-245**	6.82	**24560-256**	6.15
24560-141	6.64	**24560-157**	5.74	**24560-198**	6.20	**24560-245**	6.83	**24560-256**	6.38
24560-141	6.73	**24560-157**	5.93	**24560-199**	6.20	**24560-246**	6.108	**24560-256**	6.41
24560-141	6.74	**24560-157**	6.106	**24560-199**	6.21	**24560-246**	6.111	**24560-256**	6.81
24560-141	6.90	**24560-157**	6.37	**24560-229**	5.19	**24560-246**	6.44	**24560-270**	5.28
24560-141	6.94	**24560-157**	6.64	**24560-229**	5.54	**24560-246**	6.45	**24560-270**	5.38
24560-141	7.110	**24560-157**	6.94	**24560-229**	5.65	**24560-246**	6.47	**24560-270**	5.43
24560-145	5.39	**24560-157**	7.110	**24560-229**	6.110	**24560-246**	6.82	**24560-270**	5.71
24560-145	5.70	**24560-158**	5.42	**24560-229**	6.53	**24560-255**	5.40	**24560-270**	5.96
24560-145	5.95	**24560-158**	6.38	**24560-231**	5.19	**24560-255**	5.41	**24560-270**	6.49
24560-145	6.57	**24560-158**	6.39	**24560-231**	5.54	**24560-255**	5.42	**24560-270**	6.53
24560-145	6.65	**24560-158**	6.64	**24560-231**	5.65	**24560-255**	5.73	**24560-270**	6.54
24560-145	7.109	**24560-158**	7.109	**24560-231**	6.110	**24560-255**	5.74	**24560-270**	6.58
24560-146	5.37	**24560-159**	7.110	**24560-231**	6.53	**24560-255**	5.92	**24560-270**	6.61
24560-146	5.64	**24560-159**	7.22	**24560-233**	5.19	**24560-255**	5.93	**24560-270**	7.6
24560-146	5.94	**24560-159**	7.35	**24560-233**	5.54	**24560-255**	6.10	**24560-270**	7.91
24560-146	6.59	**24560-161**	10.28	**24560-233**	5.65	**24560-255**	6.105	**24560-271**	5.19
24560-147	11.4	**24560-161**	6.65	**24560-233**	6.110	**24560-255**	6.106	**24560-271**	5.28
24560-147	11.5	**24560-161**	7.110	**24560-233**	6.53	**24560-255**	6.107	**24560-271**	6.108
24560-147	5.35	**24560-162**	10.28	**24560-235**	5.19	**24560-255**	6.11	**24560-271**	6.111
24560-147	5.69	**24560-162**	6.65	**24560-235**	5.54	**24560-255**	6.12	**24560-271**	6.44
24560-147	5.91	**24560-162**	7.110	**24560-235**	5.65	**24560-255**	6.124	**24560-271**	6.45
24560-147	6.34	**24560-163**	10.28	**24560-235**	6.110	**24560-255**	6.13	**24560-271**	6.47
24560-147	6.65	**24560-164**	7.22	**24560-235**	6.53	**24560-255**	6.14	**24560-271**	6.82
24560-147	7.110	**24560-164**	7.35	**24560-236**	5.19	**24560-255**	6.15	**24560-271**	6.83
24560-147	7.22	**24560-165**	6.67	**24560-236**	5.65	**24560-255**	6.36	**24560-280**	6.54
24560-148	5.35	**24560-166**	6.67	**24560-236**	6.110	**24560-255**	6.37	**24560-297**	6.20
24560-148	5.69	**24560-167**	6.60	**24560-236**	6.53	**24560-255**	6.38	**24560-298**	6.20
24560-148	5.91	**24560-178**	7.78	**24560-241**	6.111	**24560-255**	6.39	**24560-299**	6.20
24560-148	6.34	**24560-178**	7.79	**24560-241**	6.44	**24560-255**	6.41	**24560-299**	6.21
24560-148	6.65	**24560-179**	5.39	**24560-241**	6.45	**24560-255**	6.73	**24560-351**	5.40
24560-148	7.110	**24560-179**	5.70	**24560-241**	6.47	**24560-255**	6.74	**24560-351**	5.73
24560-148	7.78	**24560-179**	5.95	**24560-241**	6.82	**24560-255**	6.75	**24560-351**	5.92
24560-151	6.65	**24560-179**	6.57	**24560-241**	6.83	**24560-255**	6.76	**24560-351**	6.10
24560-151	7.110	**24560-179**	6.64	**24560-243**	6.44	**24560-255**	6.78	**24560-351**	6.105
24560-155	6.20	**24560-179**	7.78	**24560-243**	6.45	**24560-255**	6.79	**24560-351**	6.11
24560-155	6.21	**24560-180**	6.54	**24560-243**	6.47	**24560-255**	6.8	**24560-351**	6.12
24560-155	6.22	**24560-182**	6.25	**24560-243**	6.82	**24560-255**	6.81	**24560-351**	6.13

Appendix

Part no.	Page
24560-351	6.36
24560-351	6.73
24560-351	6.74
24560-351	6.8
24560-351	6.81
24560-351	6.88
24560-351	6.9
24560-351	6.94
24560-353	5.40
24560-353	5.73
24560-353	5.92
24560-353	6.10
24560-353	6.105
24560-353	6.11
24560-353	6.12
24560-353	6.13
24560-353	6.36
24560-353	6.73
24560-353	6.74
24560-353	6.75
24560-353	6.76
24560-353	6.78
24560-353	6.79
24560-353	6.8
24560-353	6.81
24560-353	6.9
24560-355	5.42
24560-355	6.106
24560-355	6.15
24560-355	6.38
24560-356	5.42
24560-356	6.106
24560-356	6.14
24560-356	6.15
24560-356	6.38
24560-356	6.81
24560-358	5.42
24560-358	6.106
24560-358	6.14
24560-358	6.15
24560-358	6.38
24560-358	6.81
24560-359	5.42
24560-359	6.106
24560-359	6.14
24560-359	6.15
24560-359	6.38
24560-359	6.81
24560-360	5.42
24560-360	6.106
24560-360	6.15
24560-360	6.38
24560-361	5.42
24560-361	6.38
24560-362	5.42
24560-362	6.38
24560-373	5.41
24560-373	5.74
24560-373	5.93
24560-373	6.124
24560-373	6.37
24560-374	5.41
24560-374	5.74
24560-374	5.93
24560-374	6.124
24560-374	6.37
24560-375	5.41
24560-375	5.74
24560-375	5.93
24560-375	6.124
24560-375	6.37
24560-376	5.41
24560-376	5.74
24560-376	5.93
24560-376	6.124
24560-376	6.37
24560-377	5.41
24560-377	5.74
24560-377	5.93
24560-377	6.124
24560-377	6.37
24560-377	6.39
24560-377	6.41
24560-377	7.102
24560-378	5.41
24560-378	5.74
24560-378	5.93
24560-378	6.124
24560-378	6.37
24560-378	6.39
24560-378	6.41
24560-378	7.102
24560-379	5.40
24560-379	5.73
24560-379	5.92
24560-379	6.10
24560-379	6.105
24560-379	6.11
24560-379	6.12
24560-379	6.13
24560-379	6.36
24560-379	6.73
24560-379	6.74
24560-379	6.8
24560-379	6.9
24560-380	5.40
24560-380	5.73
24560-380	5.92
24560-380	6.10
24560-380	6.105
24560-380	6.11
24560-380	6.12
24560-380	6.36
24560-380	6.73
24560-380	6.9
24560-381	7.104
24560-480	6.54
24560-497	6.20
24560-498	6.20
24560-499	6.20
24560-499	6.21
24560-797	6.20
24560-798	6.20
24560-799	6.20
24560-799	6.21
24560-820	6.104
24560-820	6.33
24560-828	5.35
24560-828	5.68
24560-828	5.90
24560-828	6.104
24560-828	6.33
24560-840	6.104
24560-840	6.33
24560-842	5.35
24560-842	5.68
24560-842	5.90
24560-842	6.104
24560-842	6.33
24560-863	5.35
24560-863	5.68
24560-863	5.90
24560-863	6.104
24560-863	6.33
24560-884	5.35
24560-884	5.68
24560-884	5.90
24560-884	6.104
24560-884	6.33
24561-031	6.43
24561-041	6.43
24561-051	6.10
24561-051	6.43
24561-051	6.8
24561-051	6.9
24561-052	6.10
24561-052	6.43
24561-052	6.8
24561-052	6.9
24561-198	6.20
24561-198	6.22
24561-199	6.111
24561-199	6.55
24561-298	6.20
24561-330	5.42
24561-330	6.106
24561-330	6.38
24561-331	5.42
24561-331	6.106
24561-331	6.38
24561-332	5.42
24561-332	6.38
24561-340	5.42
24561-340	6.106
24561-340	6.38
24561-341	5.42
24561-341	6.106
24561-341	6.38
24561-342	5.42
24561-342	6.38
24561-498	6.20
24561-498	6.22
24561-499	6.111
24561-499	6.55
24561-798	6.20
24562-197	6.25
24562-199	6.54
24562-297	6.25
24562-299	6.54
24562-420	5.39
24562-420	5.70
24562-420	5.95
24562-420	6.57
24562-440	5.39
24562-440	5.70
24562-440	5.95
24562-440	6.57
24562-442	5.39
24562-442	5.70
24562-442	5.95
24562-442	6.57
24562-446	3.22
24562-446	6.62
24562-449	3.22
24562-449	6.62
24562-451	3.22
24562-451	6.62
24562-452	3.22
24562-452	6.62
24562-453	3.23
24562-453	6.62
24562-454	3.23
24562-454	6.62
24562-455	3.23
24562-455	6.62
24562-456	3.23
24562-456	6.62
24562-457	3.23
24562-457	6.62
24562-458	3.23

Appendix

Part no.	Page
24562-458	6.62
24562-460	3.22
24562-460	6.62
24562-461	3.22
24562-461	6.62
24562-463	5.39
24562-463	5.70
24562-463	5.95
24562-463	6.57
24562-464	3.22
24562-464	6.62
24562-466	3.22
24562-466	6.62
24562-467	3.22
24562-467	6.62
24562-468	3.22
24562-468	6.62
24562-472	3.22
24562-472	6.62
24562-473	3.22
24562-473	6.62
24562-474	3.22
24562-474	6.62
24562-484	5.39
24562-484	5.70
24562-484	5.95
24562-484	6.57
24562-497	6.25
24562-499	6.54
24562-520	5.19
24562-520	6.54
24562-528	5.19
24562-528	5.54
24562-528	5.67
24562-528	6.54
24562-540	5.19
24562-540	6.54
24562-542	5.19
24562-542	5.54
24562-542	5.67
24562-542	6.54
24562-563	5.19
24562-563	5.54
24562-563	5.67

Part no.	Page
24562-563	6.54
24562-584	5.19
24562-584	5.54
24562-584	5.67
24562-584	6.54
24562-797	6.25
24563-096	6.89
24563-100	6.89
24563-107	6.88
24563-108	6.88
24563-109	6.88
24563-110	6.88
24563-131	6.10
24563-132	6.10
24563-133	6.10
24563-134	6.10
24563-135	6.10
24563-136	6.10
24563-142	6.11
24563-143	6.11
24563-144	6.11
24563-145	6.11
24563-146	6.11
24563-152	6.14
24563-157	6.15
24563-161	6.12
24563-161	6.73
24563-162	6.12
24563-162	6.73
24563-163	6.12
24563-163	6.73
24563-164	6.12
24563-164	6.73
24563-172	6.13
24563-172	6.74
24563-173	6.13
24563-173	6.74
24563-174	6.13
24563-174	6.74
24563-191	6.9
24563-192	6.9
24563-193	6.9
24563-194	6.9
24563-431	6.10

Part no.	Page
24563-432	6.10
24563-433	6.10
24563-434	6.10
24563-435	6.10
24563-436	6.10
24563-442	6.11
24563-443	6.11
24563-444	6.11
24563-445	6.11
24563-446	6.11
24563-452	6.14
24563-457	6.15
24563-461	6.12
24563-461	6.73
24563-462	6.12
24563-462	6.73
24563-463	6.12
24563-463	6.73
24563-464	6.12
24563-464	6.73
24563-472	6.13
24563-472	6.74
24563-473	6.13
24563-473	6.74
24563-474	6.13
24563-474	6.74
24563-491	6.9
24563-492	6.9
24563-493	6.9
24563-494	6.9
24564-100	6.89
24564-109	5.38
24564-109	5.71
24564-109	5.96
24564-109	6.58
24564-117	5.38
24564-117	5.71
24564-117	5.96
24564-117	6.58
24564-118	5.38
24564-118	5.71
24564-118	5.96
24564-118	6.58
24564-131	6.8

Part no.	Page
24564-132	6.8
24564-133	6.8
24564-145	6.23
24564-147	6.23
24564-149	6.23
24564-151	6.23
24564-197	6.21
24564-198	6.21
24564-199	6.21
24564-199	6.23
24564-209	5.38
24564-209	5.71
24564-209	5.96
24564-209	6.58
24564-217	5.38
24564-217	5.71
24564-217	5.96
24564-217	6.58
24564-297	6.21
24564-298	6.21
24564-299	6.21
24564-431	6.8
24564-432	6.8
24564-433	6.8
24564-445	6.23
24564-447	6.23
24564-449	6.23
24564-451	6.23
24564-497	6.21
24564-498	6.21
24564-499	6.21
24564-499	6.23
24564-797	6.21
24564-798	6.21
24564-799	6.21
24565-100	6.89
24566-004	6.105
24566-004	6.94
24566-005	6.105
24566-005	6.94
24566-007	6.108
24566-010	6.97
24566-100	6.103
24566-101	6.103

Part no.	Page
24566-102	6.103
24566-103	6.103
24566-104	6.103
24566-105	6.103
24566-105	6.111
24566-106	6.103
24566-125	6.22
24566-127	6.22
24566-129	6.22
24566-131	6.22
24566-145	6.23
24566-147	6.23
24566-149	6.23
24566-151	6.23
24566-199	6.97
24566-400	6.109
24566-425	6.22
24566-427	6.22
24566-429	6.22
24566-431	6.22
24566-445	6.23
24566-447	6.23
24566-449	6.23
24566-451	6.23
24566-499	6.97
24567-125	6.22
24567-127	6.22
24567-129	6.22
24567-131	6.22
24567-149	6.94
24567-161	6.12
24567-161	6.73
24567-162	6.12
24567-162	6.73
24567-163	6.12
24567-163	6.73
24567-164	6.12
24567-164	6.73
24567-172	6.13
24567-172	6.74
24567-173	6.13
24567-173	6.74
24567-174	6.13
24567-174	6.74

Appendix

Part no.	Page	Part no.	Page	Part no.	Page	Part no.	Page	Part no.	Page
24567-425	6.22	24571-029	5.11	24571-186	5.15	24571-309	5.26	24571-380	5.24
24567-427	6.22	24571-030	5.11	24571-187	5.15	24571-310	5.26	24571-395	5.12
24567-429	6.22	24571-038	5.11	24571-188	5.15	24571-314	5.26	24571-438	5.11
24567-431	6.22	24571-041	5.11	24571-194	5.15	24571-315	5.26	24571-441	5.11
24567-449	6.94	24571-042	5.11	24571-197	5.15	24571-316	5.26	24571-442	5.11
24567-461	6.12	24571-043	5.11	24571-206	5.15	24571-320	5.27	24571-443	5.11
24567-461	6.73	24571-044	5.11	24571-209	5.15	24571-321	5.27	24571-444	5.11
24567-462	6.12	24571-050	5.11	24571-210	5.15	24571-322	5.27	24571-486	5.11
24567-462	6.73	24571-053	5.11	24571-218	5.15	24571-325	5.23	24571-489	5.11
24567-463	6.12	24571-062	5.11	24571-221	5.15	24571-326	5.23	24571-490	5.11
24567-463	6.73	24571-065	5.11	24571-222	5.15	24571-327	5.23	24571-491	5.11
24567-464	6.12	24571-066	5.11	24571-223	5.15	24571-328	5.23	24571-492	5.11
24567-464	6.73	24571-074	5.11	24571-230	5.15	24571-331	5.18	24571-534	5.11
24567-472	6.13	24571-077	5.11	24571-233	5.15	24571-332	5.18	24571-537	5.11
24567-472	6.74	24571-078	5.11	24571-234	5.15	24571-333	5.18	24571-538	5.11
24567-473	6.13	24571-086	5.11	24571-235	5.15	24571-334	5.18	24571-539	5.11
24567-473	6.74	24571-089	5.11	24571-236	5.15	24571-335	5.18	24571-540	5.11
24567-474	6.13	24571-090	5.11	24571-242	5.15	24571-338	5.18	24571-582	5.15
24567-474	6.74	24571-091	5.11	24571-245	5.15	24571-339	5.18	24571-585	5.15
24568-004	6.108	24571-092	5.11	24571-254	5.15	24571-340	5.18	24571-586	5.15
24568-008	6.108	24571-098	5.11	24571-257	5.15	24571-341	5.18	24571-587	5.15
24568-012	6.108	24571-101	5.11	24571-258	5.15	24571-342	5.18	24571-588	5.15
24568-016	6.108	24571-110	5.11	24571-266	5.15	24571-349	5.24	24571-630	5.15
24568-020	6.108	24571-113	5.11	24571-269	5.15	24571-350	5.24	24571-633	5.15
24568-032	6.108	24571-114	5.11	24571-270	5.15	24571-351	5.24	24571-634	5.15
24568-036	6.108	24571-122	5.11	24571-271	5.15	24571-352	5.27	24571-635	5.15
24568-143	6.97	24571-125	5.11	24571-278	5.15	24571-353	5.27	24571-636	5.15
24568-144	6.97	24571-126	5.11	24571-281	5.15	24571-354	5.27	24571-678	5.15
24568-145	6.97	24571-134	5.11	24571-282	5.15	24571-355	5.27	24571-681	5.15
24568-147	6.97	24571-137	5.11	24571-283	5.15	24571-356	5.27	24571-682	5.15
24568-149	6.97	24571-138	5.11	24571-284	5.15	24571-359	5.27	24571-683	5.15
24568-151	6.97	24571-139	5.11	24571-295	5.25	24571-360	5.27	24571-684	5.15
24568-443	6.97	24571-140	5.11	24571-296	5.25	24571-361	5.27	24571-702	5.11
24568-444	6.97	24571-146	5.15	24571-297	5.25	24571-362	5.27	24571-705	5.11
24568-445	6.97	24571-149	5.15	24571-298	5.25	24571-363	5.27	24571-714	5.11
24568-447	6.97	24571-158	5.15	24571-299	5.25	24571-371	5.28	24571-717	5.11
24568-449	6.97	24571-161	5.15	24571-300	5.25	24571-371	5.67	24571-718	5.11
24568-451	6.97	24571-162	5.15	24571-301	5.25	24571-371	5.89	24571-726	5.11
24571-002	5.11	24571-170	5.15	24571-302	5.25	24571-372	5.28	24571-729	5.11
24571-005	5.11	24571-173	5.15	24571-303	5.25	24571-372	5.31	24571-730	5.11
24571-014	5.11	24571-174	5.15	24571-304	5.25	24571-372	5.32	24571-738	5.11
24571-017	5.11	24571-175	5.15	24571-305	5.25	24571-372	5.33	24571-741	5.11
24571-018	5.11	24571-182	5.15	24571-306	5.25	24571-372	5.67	24571-742	5.11
24571-026	5.11	24571-185	5.15	24571-308	5.26	24571-372	5.89	24571-743	5.11

Appendix

Part no.	Page	Part no.	Page	Part no.	Page	Part no.	Page	Part no.	Page
24571-744	5.11	**24571-909**	5.15	**24572-029**	5.13	**24572-159**	5.11	**24572-385**	5.11
24571-750	5.11	**24571-910**	5.15	**24572-030**	5.13	**24572-201**	5.11	**24572-393**	5.11
24571-753	5.11	**24571-911**	5.15	**24572-031**	5.13	**24572-204**	5.11	**24572-396**	5.11
24571-762	5.11	**24571-921**	5.15	**24572-040**	5.13	**24572-205**	5.11	**24572-397**	5.11
24571-765	5.11	**24571-922**	5.15	**24572-041**	5.13	**24572-206**	5.11	**24572-398**	5.11
24571-766	5.11	**24571-923**	5.15	**24572-042**	5.13	**24572-207**	5.11	**24572-399**	5.11
24571-774	5.11	**24571-930**	5.15	**24572-043**	5.13	**24572-213**	5.11	**24572-404**	5.17
24571-777	5.11	**24571-933**	5.15	**24572-044**	5.13	**24572-216**	5.11	**24572-405**	5.17
24571-778	5.11	**24571-934**	5.15	**24572-050**	5.8	**24572-225**	5.11	**24572-406**	5.17
24571-786	5.11	**24571-935**	5.15	**24572-051**	5.8	**24572-228**	5.11	**24572-407**	5.17
24571-789	5.11	**24571-936**	5.15	**24572-052**	5.8	**24572-229**	5.11	**24572-408**	5.17
24571-790	5.11	**24571-942**	5.15	**24572-053**	5.8	**24572-237**	5.11	**24572-409**	5.17
24571-791	5.11	**24571-945**	5.15	**24572-054**	5.8	**24572-240**	5.11	**24572-410**	5.17
24571-792	5.11	**24571-954**	5.15	**24572-055**	5.8	**24572-241**	5.11	**24572-411**	5.17
24571-798	5.11	**24571-957**	5.15	**24572-056**	5.8	**24572-249**	5.11	**24572-500**	5.11
24571-801	5.11	**24571-958**	5.15	**24572-064**	5.8	**24572-252**	5.11	**24572-503**	5.11
24571-810	5.11	**24571-959**	5.15	**24572-065**	5.8	**24572-253**	5.11	**24572-510**	5.11
24571-813	5.11	**24571-969**	5.15	**24572-066**	5.8	**24572-254**	5.11	**24572-513**	5.11
24571-814	5.11	**24571-970**	5.15	**24572-067**	5.8	**24572-255**	5.11	**24572-514**	5.11
24571-822	5.11	**24571-971**	5.15	**24572-068**	5.8	**24572-261**	5.11	**24572-520**	5.11
24571-825	5.11	**24571-978**	5.15	**24572-074**	5.13	**24572-264**	5.11	**24572-523**	5.11
24571-826	5.11	**24571-981**	5.15	**24572-075**	5.13	**24572-273**	5.11	**24572-524**	5.11
24571-834	5.11	**24571-982**	5.15	**24572-076**	5.13	**24572-276**	5.11	**24572-530**	5.11
24571-837	5.11	**24571-983**	5.15	**24572-077**	5.13	**24572-277**	5.11	**24572-533**	5.11
24571-838	5.11	**24571-984**	5.15	**24572-078**	5.13	**24572-285**	5.11	**24572-534**	5.11
24571-839	5.11	**24571-992**	5.25	**24572-079**	5.13	**24572-288**	5.11	**24572-535**	5.11
24571-840	5.11	**24571-993**	5.25	**24572-080**	5.13	**24572-289**	5.11	**24572-536**	5.11
24571-846	5.15	**24571-994**	5.25	**24572-088**	5.13	**24572-297**	5.11	**24572-570**	5.11
24571-849	5.15	**24572-001**	5.8	**24572-089**	5.13	**24572-300**	5.11	**24572-573**	5.11
24571-858	5.15	**24572-002**	5.8	**24572-090**	5.13	**24572-301**	5.11	**24572-574**	5.11
24571-861	5.15	**24572-003**	5.8	**24572-091**	5.13	**24572-302**	5.11	**24572-575**	5.11
24571-862	5.15	**24572-004**	5.8	**24572-092**	5.13	**24572-303**	5.11	**24572-576**	5.11
24571-863	5.15	**24572-005**	5.8	**24572-117**	5.11	**24572-345**	5.11	**24572-599**	5.20
24571-873	5.15	**24572-006**	5.8	**24572-120**	5.11	**24572-348**	5.11	**24572-600**	5.20
24571-874	5.15	**24572-007**	5.8	**24572-129**	5.11	**24572-349**	5.11	**24572-601**	5.20
24571-875	5.15	**24572-015**	5.8	**24572-132**	5.11	**24572-350**	5.11	**24572-602**	5.20
24571-882	5.15	**24572-016**	5.8	**24572-133**	5.11	**24572-351**	5.11	**24572-603**	5.20
24571-885	5.15	**24572-017**	5.8	**24572-141**	5.11	**24572-357**	5.11	**24572-604**	5.20
24571-886	5.15	**24572-018**	5.8	**24572-144**	5.11	**24572-360**	5.11	**24572-605**	5.20
24571-887	5.15	**24572-019**	5.8	**24572-145**	5.11	**24572-369**	5.11	**24572-606**	5.20
24571-888	5.15	**24572-025**	5.13	**24572-153**	5.11	**24572-372**	5.11	**24572-607**	5.20
24571-894	5.15	**24572-026**	5.13	**24572-156**	5.11	**24572-373**	5.11	**24572-608**	5.20
24571-897	5.15	**24572-027**	5.13	**24572-157**	5.11	**24572-381**	5.11	**24572-609**	5.20
24571-906	5.15	**24572-028**	5.13	**24572-158**	5.11	**24572-384**	5.11	**24572-610**	5.20

Appendix

Part no.	Page
24575-019	5.81
24575-035	5.82
24575-038	5.86
24575-075	5.82
24575-078	5.86
24575-114	5.83
24575-115	5.82
24575-118	5.86
24575-119	5.81
24575-135	5.82
24575-136	5.84
24575-137	5.85
24575-138	5.86
24575-155	5.82
24575-156	5.84
24575-157	5.85
24575-158	5.86
24575-175	5.82
24575-176	5.84
24575-177	5.85
24575-178	5.86
24575-214	5.83
24575-219	5.81
24575-235	5.82
24575-255	5.82
24575-275	5.82
24575-419	5.81
24575-454	5.90
24575-455	5.82
24575-474	5.68
24575-474	5.90
24575-475	5.82
24575-800	5.26
24575-800	5.65
24575-800	5.81
24575-801	5.86
24576-001	5.49
24576-002	5.49
24576-003	5.49
24576-004	5.49
24576-005	5.49
24576-006	5.49
24576-007	5.49
24576-008	5.49
24576-009	5.49
24576-010	5.49
24576-011	5.49
24576-012	5.49
24576-013	5.49
24576-017	5.59
24576-018	5.59
24576-021	5.49
24576-022	5.49
24576-028	5.67
24576-042	5.67
24576-044	5.56
24576-045	5.56
24576-046	5.56
24576-047	5.56
24576-048	5.56
24576-049	5.56
24576-050	5.56
24576-052	5.56
24576-053	5.56
24576-054	5.56
24576-058	5.56
24576-063	5.67
24576-071	5.52
24576-072	5.52
24576-073	5.52
24576-080	5.62
24576-081	5.62
24576-082	5.62
24576-083	5.62
24576-084	5.67
24576-086	5.63
24576-087	5.63
24576-088	5.63
24576-091	5.63
24576-092	5.63
24576-093	5.61
24576-094	5.61
24576-095	5.61
24576-096	5.61
24576-101	5.47
24576-102	5.47
24576-103	5.47
24576-104	5.47
24576-105	5.47
24576-106	5.47
24576-107	5.47
24576-108	5.47
24576-109	5.47
24576-110	5.47
24576-111	5.47
24576-112	5.47
24576-113	5.47
24576-117	5.59
24576-118	5.59
24576-121	5.47
24576-122	5.47
24576-144	5.56
24576-145	5.56
24576-146	5.56
24576-147	5.56
24576-148	5.56
24576-149	5.56
24576-150	5.56
24576-152	5.56
24576-153	5.56
24576-154	5.56
24576-158	5.56
24576-217	5.59
24576-218	5.59
24576-244	5.56
24576-245	5.56
24576-247	5.56
24576-248	5.56
24576-249	5.56
24576-250	5.56
24576-252	5.56
24576-253	5.56
24576-254	5.56
24576-258	5.56
24576-393	5.63
24576-394	5.63
24576-417	5.59
24576-418	5.59
24579-026	8.82
24579-028	8.87
24579-030	8.81
24579-031	8.78
24579-033	8.78
24579-033	8.79
24579-033	8.80
24579-033	8.81
24579-033	8.82
24579-033	8.92
24579-037	7.63
24579-038	7.63
24579-039	7.63
24579-042	8.108
24579-043	8.108
24579-058	8.111
24579-059	8.111
24579-074	8.109
24579-077	8.76
24579-078	8.77
24579-079	8.76
24579-080	8.77
24579-081	8.76
24579-082	8.77
24579-090	6.44
24579-092	6.44
24579-105	8.78
24579-105	8.81
24579-106	8.77
24579-112	8.86
24579-135	8.86
24579-212	8.78
24579-212	8.81
24579-225	8.84
24579-225	8.85
24579-230	8.109
24579-250	8.79
24579-260	8.80
24579-400	8.74
24579-405	8.73
24579-415	8.70
24579-420	8.71
24579-602	8.84
24579-604	8.83
24579-605	8.75
24579-606	8.72
24579-612	8.85
24812-005	7.87
24812-006	7.87
24812-007	7.87
24812-010	7.87
24812-012	7.87
24812-014	7.87
24812-055	7.87
24812-056	7.87
24812-057	7.87
24812-060	7.87
24812-062	7.87
24812-064	7.87
24812-100	7.77
24812-101	7.77
24812-162	7.73
24812-164	7.73
24812-171	7.73
24812-201	7.79
24812-202	7.78
24812-208	7.70
24812-210	7.70
24812-212	7.70
24812-214	7.70
24812-221	7.70
24812-228	7.70
24812-242	7.70
24812-258	7.70
24812-260	7.70
24812-262	7.70
24812-264	7.70
24812-271	7.70
24812-278	7.70
24812-292	7.70
24812-301	7.79
24812-302	7.78
24812-308	7.70
24812-310	7.70
24812-312	7.70
24812-314	7.70
24812-321	7.70
24812-328	7.70
24812-342	7.70
24812-358	7.70
24812-360	7.70
24812-362	7.70

Appendix

Part no.	Page	Part no.	Page	Part no.	Page	Part no.	Page	Part no.	Page
24812-364	7.70	**24812-721**	7.71	**24813-055**	7.86	**24813-460**	7.68	**24813-860**	7.69
24812-371	7.70	**24812-728**	7.71	**24813-056**	7.86	**24813-462**	7.68	**24813-862**	7.69
24812-378	7.70	**24812-742**	7.71	**24813-057**	7.86	**24813-464**	7.68	**24813-864**	7.69
24812-392	7.70	**24812-758**	7.71	**24813-060**	7.86	**24813-471**	7.68	**24813-871**	7.69
24812-401	7.77	**24812-760**	7.71	**24813-062**	7.86	**24813-478**	7.68	**24813-878**	7.69
24812-402	7.78	**24812-762**	7.71	**24813-064**	7.86	**24813-492**	7.68	**24813-892**	7.69
24812-408	7.70	**24812-764**	7.71	**24813-164**	7.72	**24813-505**	7.86	**24813-908**	7.69
24812-410	7.70	**24812-771**	7.71	**24813-171**	7.72	**24813-506**	7.86	**24813-910**	7.69
24812-412	7.70	**24812-778**	7.71	**24813-208**	7.68	**24813-507**	7.86	**24813-912**	7.69
24812-414	7.70	**24812-792**	7.71	**24813-210**	7.68	**24813-510**	7.86	**24813-914**	7.69
24812-421	7.70	**24812-808**	7.71	**24813-212**	7.68	**24813-512**	7.86	**24813-921**	7.69
24812-428	7.70	**24812-810**	7.71	**24813-214**	7.68	**24813-514**	7.86	**24813-928**	7.69
24812-442	7.70	**24812-812**	7.71	**24813-221**	7.68	**24813-555**	7.86	**24813-942**	7.69
24812-458	7.70	**24812-814**	7.71	**24813-228**	7.68	**24813-556**	7.86	**24813-958**	7.69
24812-460	7.70	**24812-821**	7.71	**24813-242**	7.68	**24813-557**	7.86	**24813-960**	7.69
24812-462	7.70	**24812-828**	7.71	**24813-258**	7.68	**24813-560**	7.86	**24813-962**	7.69
24812-464	7.70	**24812-842**	7.71	**24813-260**	7.68	**24813-562**	7.86	**24813-964**	7.69
24812-471	7.70	**24812-858**	7.71	**24813-262**	7.68	**24813-564**	7.86	**24813-971**	7.69
24812-478	7.70	**24812-860**	7.71	**24813-264**	7.68	**24813-614**	7.72	**24813-978**	7.69
24812-492	7.70	**24812-862**	7.71	**24813-271**	7.68	**24813-621**	7.72	**24813-992**	7.69
24812-501	7.78	**24812-864**	7.71	**24813-278**	7.68	**24813-664**	7.72	**24814-008**	7.100
24812-505	7.87	**24812-871**	7.71	**24813-292**	7.68	**24813-671**	7.72	**24814-010**	7.100
24812-506	7.87	**24812-878**	7.71	**24813-308**	7.68	**24813-708**	7.69	**24814-011**	7.100
24812-507	7.87	**24812-892**	7.71	**24813-310**	7.68	**24813-710**	7.69	**24814-014**	7.100
24812-510	7.87	**24812-908**	7.71	**24813-312**	7.68	**24813-712**	7.69	**24814-024**	7.101
24812-512	7.87	**24812-910**	7.71	**24813-314**	7.68	**24813-714**	7.69	**24814-025**	7.101
24812-514	7.87	**24812-912**	7.71	**24813-321**	7.68	**24813-721**	7.69	**24814-027**	7.101
24812-555	7.87	**24812-914**	7.71	**24813-328**	7.68	**24813-728**	7.69	**25127-575**	1.311
24812-556	7.87	**24812-921**	7.71	**24813-342**	7.68	**24813-742**	7.69	**25127-995**	1.103
24812-557	7.87	**24812-928**	7.71	**24813-358**	7.68	**24813-758**	7.69	**25127-995**	1.107
24812-560	7.87	**24812-942**	7.71	**24813-360**	7.68	**24813-760**	7.69	**25127-995**	1.12
24812-562	7.87	**24812-958**	7.71	**24813-362**	7.68	**24813-762**	7.69	**25127-995**	1.127
24812-564	7.87	**24812-960**	7.71	**24813-364**	7.68	**24813-764**	7.69	**25127-995**	1.129
24812-600	7.79	**24812-962**	7.71	**24813-371**	7.68	**24813-771**	7.69	**25127-995**	1.13
24812-612	7.73	**24812-964**	7.71	**24813-378**	7.68	**24813-778**	7.69	**25127-995**	1.131
24812-614	7.73	**24812-971**	7.71	**24813-392**	7.68	**24813-792**	7.69	**25127-995**	1.14
24812-621	7.73	**24812-978**	7.71	**24813-408**	7.68	**24813-808**	7.69	**25127-995**	1.15
24812-662	7.73	**24812-992**	7.71	**24813-410**	7.68	**24813-810**	7.69	**25127-995**	1.160
24812-664	7.73	**24813-005**	7.86	**24813-412**	7.68	**24813-812**	7.69	**25127-995**	1.161
24812-671	7.73	**24813-006**	7.86	**24813-414**	7.68	**24813-814**	7.69	**25127-995**	1.162
24812-708	7.71	**24813-007**	7.86	**24813-421**	7.68	**24813-821**	7.69	**25127-995**	1.182
24812-710	7.71	**24813-010**	7.86	**24813-428**	7.68	**24813-828**	7.69	**25127-995**	1.183
24812-712	7.71	**24813-012**	7.86	**24813-442**	7.68	**24813-842**	7.69	**25127-995**	1.184
24812-714	7.71	**24813-014**	7.86	**24813-458**	7.68	**24813-858**	7.69	**25127-995**	1.228

Appendix

Part no.	Page	Part no.	Page	Part no.	Page	Part no.	Page	Part no.	Page
25127-995	1.229	25230-024	1.247	25230-175	1.260	25230-379	1.263	26230-029	1.246
25127-995	1.230	25230-024	1.261	25230-176	1.260	25230-430	1.248	26230-029	1.261
25127-995	1.232	25230-024	1.262	25230-177	1.260	25230-430	1.263	26230-030	1.247
25127-995	1.238	25230-025	1.246	25230-178	1.260	25230-434	1.248	26230-030	1.262
25127-995	1.30	25230-025	1.261	25230-179	1.260	25230-434	1.263	26230-070	1.260
25127-995	1.31	25230-026	1.246	25230-223	1.260	25230-439	1.248	26230-071	1.260
25127-995	1.32	25230-026	1.247	25230-224	1.260	25230-439	1.263	26230-072	1.260
25127-995	1.41	25230-026	1.261	25230-225	1.260	25230-448	1.248	26230-073	1.260
25127-995	1.56	25230-026	1.262	25230-226	1.260	25230-448	1.263	26230-074	1.260
25127-995	1.57	25230-027	1.246	25230-227	1.260	25230-452	1.248	26230-075	1.260
25127-995	1.58	25230-027	1.247	25230-228	1.260	25230-452	1.263	26230-076	1.260
25127-995	1.71	25230-027	1.261	25230-229	1.260	25230-457	1.248	26230-077	1.260
25127-995	1.86	25230-027	1.262	25230-273	1.260	25230-457	1.263	26230-078	1.260
25127-995	1.87	25230-028	1.246	25230-274	1.260	25230-461	1.248	26230-079	1.260
25127-995	1.99	25230-028	1.247	25230-275	1.260	25230-461	1.263	26230-120	1.260
25127-995	2.28	25230-028	1.261	25230-276	1.260	26230-020	1.261	26230-121	1.260
25127-997	1.111	25230-028	1.262	25230-277	1.260	26230-021	1.246	26230-122	1.260
25127-997	1.140	25230-029	1.246	25230-278	1.260	26230-021	1.261	26230-123	1.260
25127-997	1.169	25230-029	1.261	25230-279	1.260	26230-022	1.246	26230-124	1.260
25127-997	1.19	25230-030	1.247	25230-323	1.260	26230-022	1.247	26230-125	1.260
25127-997	1.191	25230-030	1.262	25230-324	1.260	26230-022	1.261	26230-126	1.260
25127-997	1.337	25230-070	1.260	25230-325	1.260	26230-022	1.262	26230-127	1.260
25127-997	1.44	25230-071	1.260	25230-326	1.260	26230-023	1.246	26230-128	1.260
25127-997	1.61	25230-072	1.260	25230-327	1.260	26230-023	1.247	26230-129	1.260
25127-997	1.75	25230-073	1.260	25230-328	1.260	26230-023	1.261	26230-172	1.260
25127-997	1.88	25230-074	1.260	25230-329	1.260	26230-023	1.262	26230-173	1.260
25230-001	1.264	25230-075	1.260	25230-370	1.263	26230-024	1.246	26230-174	1.260
25230-002	1.264	25230-076	1.260	25230-371	1.248	26230-024	1.247	26230-175	1.260
25230-003	1.264	25230-077	1.260	25230-371	1.263	26230-024	1.261	26230-176	1.260
25230-010	1.264	25230-078	1.260	25230-372	1.248	26230-024	1.262	26230-177	1.260
25230-011	1.264	25230-079	1.260	25230-372	1.263	26230-025	1.246	26230-178	1.260
25230-012	1.264	25230-120	1.260	25230-373	1.248	26230-025	1.261	26230-179	1.260
25230-020	1.261	25230-121	1.260	25230-373	1.263	26230-026	1.246	26230-223	1.260
25230-021	1.246	25230-122	1.260	25230-374	1.248	26230-026	1.247	26230-224	1.260
25230-021	1.261	25230-123	1.260	25230-374	1.263	26230-026	1.261	26230-225	1.260
25230-022	1.246	25230-124	1.260	25230-375	1.248	26230-026	1.262	26230-226	1.260
25230-022	1.247	25230-125	1.260	25230-375	1.263	26230-027	1.246	26230-227	1.260
25230-022	1.261	25230-126	1.260	25230-376	1.248	26230-027	1.247	26230-228	1.260
25230-022	1.262	25230-127	1.260	25230-376	1.263	26230-027	1.261	26230-229	1.260
25230-023	1.246	25230-128	1.260	25230-377	1.248	26230-027	1.262	26230-273	1.260
25230-023	1.247	25230-129	1.260	25230-377	1.263	26230-028	1.246	26230-274	1.260
25230-023	1.261	25230-172	1.260	25230-378	1.248	26230-028	1.247	26230-275	1.260
25230-023	1.262	25230-173	1.260	25230-378	1.263	26230-028	1.261	26230-276	1.260
25230-024	1.246	25230-174	1.260	25230-379	1.248	26230-028	1.262	26230-277	1.260

Appendix

Part no.	Page	Part no.	Page	Part no.	Page	Part no.	Page	Part no.	Page
26230-278	1.260	**27230-002**	1.261	**27230-079**	1.266	**27230-147**	1.266	**28230-070**	1.258
26230-279	1.260	**27230-003**	1.246	**27230-081**	1.265	**27230-148**	1.250	**28230-074**	1.258
26230-323	1.260	**27230-003**	1.261	**27230-082**	1.265	**27230-148**	1.266	**28230-079**	1.258
26230-324	1.260	**27230-004**	1.246	**27230-083**	1.265	**27230-200**	1.251	**28230-088**	1.258
26230-325	1.260	**27230-004**	1.261	**27230-085**	1.265	**27230-200**	1.267	**28230-092**	1.258
26230-326	1.260	**27230-005**	1.246	**27230-086**	1.265	**27230-201**	1.251	**28230-097**	1.258
26230-327	1.260	**27230-005**	1.261	**27230-087**	1.265	**27230-201**	1.267	**28230-101**	1.258
26230-328	1.260	**27230-006**	1.246	**27230-091**	1.249	**27230-202**	1.251	**28230-126**	1.258
26230-329	1.260	**27230-006**	1.261	**27230-091**	1.266	**27230-202**	1.267	**28230-130**	1.258
26230-370	1.263	**27230-007**	1.246	**27230-092**	1.249	**27230-203**	1.251	**28230-134**	1.258
26230-371	1.248	**27230-007**	1.261	**27230-092**	1.266	**27230-203**	1.267	**28230-139**	1.258
26230-371	1.263	**27230-008**	1.246	**27230-093**	1.249	**27230-204**	1.251	**28230-148**	1.258
26230-372	1.248	**27230-008**	1.261	**27230-093**	1.266	**27230-204**	1.267	**28230-152**	1.258
26230-372	1.263	**27230-009**	1.246	**27230-100**	1.259	**27230-205**	1.251	**28230-157**	1.258
26230-373	1.248	**27230-009**	1.261	**27230-102**	1.252	**27230-205**	1.267	**28230-162**	1.258
26230-373	1.263	**27230-010**	1.246	**27230-102**	1.268	**27230-206**	1.251	**28230-310**	1.258
26230-374	1.248	**27230-010**	1.261	**27230-103**	1.252	**27230-206**	1.267	**28230-314**	1.258
26230-374	1.263	**27230-051**	1.253	**27230-103**	1.268	**27230-207**	1.251	**28230-319**	1.258
26230-375	1.248	**27230-051**	1.267	**27230-104**	1.252	**27230-207**	1.267	**28230-328**	1.258
26230-375	1.263	**27230-052**	1.253	**27230-104**	1.268	**27230-208**	1.251	**28230-332**	1.258
26230-376	1.248	**27230-052**	1.267	**27230-110**	1.259	**27230-208**	1.267	**28230-337**	1.258
26230-376	1.263	**27230-053**	1.253	**27230-111**	1.250	**27230-209**	1.251	**28230-341**	1.258
26230-377	1.248	**27230-053**	1.267	**27230-111**	1.266	**27230-209**	1.267	**28230-370**	1.258
26230-377	1.263	**27230-060**	1.247	**27230-112**	1.258	**28127-001**	1.298	**28230-374**	1.258
26230-378	1.248	**27230-060**	1.262	**27230-114**	1.249	**28127-001**	1.311	**28230-379**	1.258
26230-378	1.263	**27230-061**	1.247	**27230-114**	1.266	**28127-240**	1.196	**28230-388**	1.258
26230-379	1.248	**27230-061**	1.262	**27230-115**	1.260	**28127-241**	1.174	**28230-392**	1.258
26230-379	1.263	**27230-065**	1.264	**27230-116**	1.263	**28127-281**	1.134	**28230-397**	1.258
26230-430	1.248	**27230-065**	1.265	**27230-121**	1.251	**28127-281**	1.165	**28230-401**	1.258
26230-430	1.263	**27230-066**	1.244	**27230-121**	1.267	**28127-281**	1.187	**28230-430**	1.258
26230-434	1.248	**27230-066**	1.245	**27230-122**	1.251	**28127-281**	1.34	**28230-434**	1.258
26230-434	1.263	**27230-066**	1.264	**27230-122**	1.267	**28230-001**	1.258	**28230-439**	1.258
26230-439	1.248	**27230-067**	1.259	**27230-123**	1.251	**28230-004**	1.258	**28230-448**	1.258
26230-439	1.263	**27230-068**	1.259	**27230-123**	1.267	**28230-007**	1.258	**28230-452**	1.258
26230-448	1.248	**27230-069**	1.259	**27230-125**	1.252	**28230-011**	1.258	**28230-457**	1.258
26230-448	1.263	**27230-070**	1.250	**27230-125**	1.268	**28230-015**	1.258	**28230-461**	1.258
26230-452	1.248	**27230-070**	1.266	**27230-126**	1.252	**28230-020**	1.258	**29001-019**	11.6
26230-452	1.263	**27230-071**	1.250	**27230-126**	1.268	**28230-029**	1.258	**29090-001**	11.6
26230-457	1.248	**27230-071**	1.266	**27230-143**	1.258	**28230-033**	1.258	**29090-002**	11.6
26230-457	1.263	**27230-072**	1.250	**27230-144**	1.255	**28230-042**	1.258	**30118-267**	4.65
26230-461	1.248	**27230-072**	1.266	**27230-144**	1.258	**28230-048**	1.258	**30118-299**	3.4
26230-461	1.263	**27230-077**	1.265	**27230-146**	1.250	**28230-060**	1.258	**30118-301**	3.4
27230-001	1.261	**27230-078**	1.265	**27230-146**	1.266	**28230-063**	1.258	**30118-302**	3.4
27230-002	1.246	**27230-079**	1.249	**27230-147**	1.250	**28230-066**	1.258	**30118-303**	3.4

Appendix

Part no.	Page
30118-304	3.4
30118-305	3.4
30118-306	3.4
30118-307	3.4
30118-308	3.4
30118-309	3.4
30118-315	4.65
30118-328	3.16
30118-329	3.16
30118-330	3.16
30118-331	3.16
30118-332	3.16
30118-334	3.16
30118-335	3.16
30118-336	3.16
30118-338	3.16
30118-341	7.10
30118-342	7.10
30118-343	7.10
30118-344	7.10
30118-345	7.10
30118-346	7.10
30118-347	7.10
30118-348	7.10
30118-349	7.10
30118-350	7.10
30118-351	7.10
30118-352	7.10
30118-353	7.10
30118-354	7.10
30118-355	7.11
30118-360	4.65
30118-802	3.15
30118-803	3.15
30118-948	3.4
30118-949	3.4
30118-950	3.4
30118-951	3.4
30118-952	3.4
30118-953	3.4
30118-954	3.4
30118-955	3.4
30118-956	3.4
30118-957	3.4
30118-962	3.6
30118-963	3.6
30118-964	3.6
30219-098	3.4
30219-101	3.4
30219-104	3.4
30219-107	3.4
30219-110	3.4
30219-113	3.4
30219-137	3.4
30219-138	3.4
30219-143	3.4
30219-144	3.4
30219-161	3.2
30219-162	3.2
30219-163	3.2
30219-164	3.2
30219-165	3.2
30219-166	3.2
30225-089	5.105
30225-090	5.105
30225-091	5.105
30225-092	5.105
30502-051	5.110
30502-191	5.112
30702-044	3.6
30702-045	3.6
30702-046	3.6
30702-047	3.6
30702-048	3.6
30702-049	3.6
30702-056	3.6
30702-057	3.6
30702-058	3.6
30807-416	6.48
30807-416	7.4
30807-481	6.48
30807-481	7.4
30807-482	6.48
30807-482	7.4
30807-483	6.48
30807-483	7.4
30807-484	6.48
30807-484	7.4
30807-485	6.48
30807-485	7.4
30807-487	6.48
30807-487	7.4
30807-494	6.48
30807-494	7.4
30807-496	6.48
30807-496	7.4
30807-501	6.48
30807-501	7.4
30807-506	6.48
30807-506	7.4
30807-508	6.48
30807-508	7.4
30807-509	6.48
30807-509	7.4
30807-510	6.48
30807-510	7.4
30807-752	7.4
30807-753	6.48
30807-753	7.4
30807-755	7.4
30807-757	6.48
30807-757	7.4
30807-758	6.48
30807-758	7.4
30807-764	6.48
30807-764	7.4
30807-766	6.48
30807-766	7.4
30807-771	6.48
30807-771	7.4
30807-776	6.48
30807-776	7.4
30807-777	7.4
30807-778	7.4
30807-779	7.4
30807-780	7.4
30808-067	6.48
30808-067	7.4
30808-871	7.106
30808-871	7.56
30809-428	7.55
30809-571	7.61
30809-635	7.91
30809-636	7.91
30809-637	7.91
30809-638	7.91
30809-639	7.91
30809-640	7.91
30809-641	7.91
30809-642	7.91
30809-643	7.91
30809-644	7.91
30809-645	7.91
30809-646	7.91
30809-667	7.91
30809-668	7.91
30809-669	7.91
30809-670	7.91
30809-671	7.91
30809-672	7.91
30809-673	7.91
30809-674	7.91
30809-675	7.91
30809-676	7.91
30809-677	7.91
30809-678	7.91
30809-679	7.91
30809-680	7.91
30809-681	7.91
30809-682	7.91
30809-698	7.91
30809-699	7.91
30809-700	7.92
30809-701	7.92
30810-432	6.48
30810-432	7.4
30810-433	6.48
30810-433	7.4
30812-002	11.9
30814-513	6.132
30818-271	6.48
30818-271	7.4
30818-272	6.48
30818-272	7.4
30818-273	6.48
30818-273	7.4
30818-274	6.48
30818-274	7.4
30818-275	6.48
30818-275	7.4
30818-276	6.48
30818-276	7.4
30818-277	6.48
30818-277	7.4
30818-279	6.48
30818-279	7.4
30818-281	6.48
30818-281	7.4
30818-282	6.48
30818-282	7.4
30818-289	6.48
30818-289	7.4
30818-296	6.48
30818-296	7.4
30818-310	6.48
30818-310	7.4
30818-331	6.48
30818-331	7.4
30818-352	6.48
30818-352	7.4
30818-434	6.48
30818-434	7.4
30818-518	6.48
30818-518	7.4
30818-519	7.4
30818-520	7.4
30818-521	7.4
30818-522	6.48
30818-522	7.4
30818-524	6.48
30818-524	7.4
30818-526	6.48
30818-526	7.4
30818-528	6.48
30818-528	7.4
30818-530	6.48
30818-530	7.4
30818-535	6.48
30818-535	7.4
30818-542	6.48

Appendix

Part no.	Page
30818-542	7.4
30818-556	6.48
30818-556	7.4
30818-577	6.48
30818-577	7.4
30818-598	6.48
30818-598	7.4
30818-741	6.48
30818-741	7.4
30818-747	6.48
30818-747	7.4
30819-604	6.132
30819-763	6.34
30819-783	5.35
30819-783	5.69
30819-783	5.91
30819-783	6.34
30819-808	5.35
30819-808	5.69
30819-808	5.91
30819-808	6.34
30821-589	6.121
30821-589	6.123
30822-025	6.34
30822-033	5.35
30822-033	5.69
30822-033	5.91
30822-033	6.34
30822-045	6.34
30822-047	5.35
30822-047	5.69
30822-047	5.91
30822-047	6.34
30822-065	5.35
30822-065	5.69
30822-065	5.91
30822-065	6.34
30822-089	5.35
30822-089	5.69
30822-089	5.91
30822-089	6.34
30822-166	9.16
30823-015	5.82
30823-021	5.82
30823-024	5.82
30823-027	5.82
30823-033	5.82
30823-036	5.82
30823-045	5.82
30823-209	5.82
30823-215	5.82
30823-224	5.82
30823-227	5.82
30823-230	5.82
30823-254	5.82
30823-257	5.82
30823-260	5.82
30823-269	5.82
30823-272	5.82
30823-284	5.82
30823-512	5.82
30823-515	5.82
30823-518	5.82
30823-521	5.82
30828-055	6.131
30828-058	6.131
30828-061	6.131
30828-067	6.131
30828-070	6.131
30828-073	6.131
30828-076	6.131
30828-082	6.131
30828-085	6.131
30828-088	6.131
30828-091	6.131
30828-097	6.131
30828-128	6.132
30828-165	6.132
30828-174	6.132
30829-001	7.44
30829-007	7.44
30838-043	6.48
30838-043	7.4
30838-044	6.48
30838-044	7.4
30838-045	6.48
30838-045	7.4
30838-046	6.48
30838-046	7.4
30838-047	6.48
30838-047	7.4
30838-049	6.48
30838-049	7.4
30838-051	6.48
30838-051	7.4
30838-053	6.48
30838-053	7.4
30838-060	6.48
30838-060	7.4
30838-067	6.48
30838-067	7.4
30838-081	6.48
30838-081	7.4
30838-102	6.48
30838-102	7.4
30838-123	6.48
30838-123	7.4
30838-124	6.48
30838-124	7.4
30838-125	6.48
30838-125	7.4
30838-126	6.48
30838-126	7.4
30838-127	6.48
30838-127	7.4
30838-128	6.48
30838-128	7.4
30838-130	6.48
30838-130	7.4
30838-132	6.48
30838-132	7.4
30838-134	6.48
30838-134	7.4
30838-136	6.48
30838-136	7.4
30838-141	6.48
30838-141	7.4
30838-148	6.48
30838-148	7.4
30838-162	6.48
30838-162	7.4
30838-183	6.48
30838-183	7.4
30838-204	6.48
30838-204	7.4
30840-021	5.37
30840-021	5.64
30840-021	5.94
30840-021	6.59
30840-033	5.37
30840-033	5.64
30840-033	5.94
30840-033	6.59
30840-045	5.37
30840-045	5.94
30840-045	6.59
30840-057	5.37
30840-057	5.64
30840-057	5.94
30840-057	6.59
30845-189	6.104
30845-189	6.33
30845-197	5.35
30845-197	5.68
30845-197	6.104
30845-197	6.33
30845-209	6.104
30845-209	6.33
30845-211	5.35
30845-211	5.68
30845-211	6.104
30845-211	6.33
30845-232	5.35
30845-232	5.68
30845-232	6.104
30845-232	6.33
30845-253	5.35
30845-253	5.68
30845-253	6.104
30845-253	6.33
30846-588	6.49
30846-588	7.5
30846-676	6.49
30846-676	7.5
30846-681	6.49
30846-682	6.49
30846-683	6.49
30846-683	7.5
30846-771	6.49
30846-771	7.5
30846-859	6.49
30846-859	7.5
30846-864	6.49
30846-864	7.5
30846-865	6.49
30846-865	7.5
30847-461	6.48
30847-461	7.4
30847-463	6.48
30847-464	6.48
30847-465	6.48
30847-465	7.4
30847-470	6.48
30847-470	7.4
30847-471	6.48
30847-471	7.4
30847-472	5.39
30847-472	5.70
30847-472	5.95
30847-472	6.48
30847-472	6.57
30847-472	7.4
30847-476	6.48
30847-480	6.48
30847-482	6.48
30847-484	6.48
30847-556	6.48
30847-556	7.4
30847-602	7.54
30847-603	7.54
30847-604	7.54
30847-605	7.54
30847-606	7.54
30847-607	7.54
30847-608	7.54
30847-609	7.54
30847-625	7.54
30847-626	7.54
30847-627	7.54
30847-628	7.54

Appendix

Part no.	Page
30847-630	7.54
30847-631	7.54
30847-659	7.40
30847-660	7.40
30847-661	7.40
30847-662	7.40
30847-663	7.40
30847-664	7.40
30847-665	7.40
30847-666	7.40
30847-667	7.40
30847-668	7.40
30847-669	7.40
30847-670	7.40
30847-671	7.40
30847-672	7.40
30848-300	7.19
30848-300	7.33
30848-301	7.19
30848-301	7.33
30848-304	7.19
30848-304	7.33
30848-305	7.19
30848-305	7.33
30848-312	7.19
30848-312	7.33
30848-313	7.19
30848-313	7.33
30848-314	7.19
30848-314	7.33
30848-315	7.19
30848-315	7.33
30848-316	7.19
30848-316	7.33
30848-317	7.19
30848-317	7.33
30848-318	7.19
30848-318	7.33
30848-319	7.19
30848-319	7.33
30848-320	7.19
30848-320	7.33
30848-321	7.19
30848-321	7.33
30848-327	7.19
30848-327	7.33
30848-328	7.19
30848-328	7.33
30848-329	7.19
30848-329	7.33
30848-330	7.19
30848-330	7.33
30848-331	7.19
30848-331	7.33
30848-333	7.19
30848-333	7.33
30848-335	7.19
30848-335	7.33
30848-336	7.19
30848-336	7.33
30848-337	7.19
30848-337	7.33
30848-338	7.19
30848-338	7.33
30848-339	7.19
30848-339	7.33
30848-340	7.19
30848-340	7.33
30848-342	7.19
30848-342	7.33
30848-344	7.19
30848-344	7.33
30848-354	6.50
30848-354	7.7
30848-355	6.50
30848-355	7.7
30848-356	6.50
30848-356	7.7
30848-357	6.50
30848-357	7.7
30848-358	6.50
30848-358	7.7
30848-359	6.50
30848-359	7.7
30848-378	6.50
30848-378	7.7
30848-379	6.50
30848-379	7.7
30848-380	6.50
30848-380	7.7
30848-381	6.50
30848-381	7.7
30848-382	6.50
30848-382	7.7
30848-383	6.50
30848-383	7.7
30848-386	6.50
30848-386	7.7
30848-387	6.50
30848-387	7.7
30848-426	7.19
30848-427	7.19
30848-428	7.19
30848-429	7.19
30848-430	7.19
30848-431	7.19
30848-432	7.19
30848-461	7.40
30848-463	7.40
30848-465	7.40
30848-466	7.40
30848-467	7.40
30848-468	7.40
30848-470	7.40
30848-472	7.40
30848-473	7.40
30848-474	7.40
30848-867	7.19
30848-869	7.19
30848-985	7.19
30849-001	6.50
30849-001	7.7
30849-002	6.50
30849-002	7.7
30849-004	6.50
30849-004	7.7
30849-007	5.22
30849-007	5.55
30849-008	5.22
30849-008	5.55
30849-009	5.22
30849-009	5.55
30849-010	5.22
30849-010	5.55
30849-011	5.22
30849-014	5.22
30849-014	5.55
30849-015	5.22
30849-015	5.55
30849-016	5.22
30849-016	5.55
30849-021	5.22
30849-021	5.55
30849-022	5.22
30849-022	5.55
30849-023	5.22
30849-023	5.55
30849-028	5.22
30849-028	5.55
30849-029	5.22
30849-029	5.55
30849-030	5.22
30849-030	5.55
30849-035	5.22
30849-035	5.55
30849-036	5.22
30849-036	5.55
30849-037	5.22
30849-037	5.55
30849-086	7.54
30849-087	7.54
30849-088	7.54
30849-089	7.54
30849-090	7.54
30849-091	7.54
30849-092	7.54
30849-093	7.54
30849-097	7.54
30849-098	7.54
30849-099	7.54
30849-100	7.54
30849-101	7.54
30849-102	7.54
30849-103	7.54
30849-104	7.54
30849-140	5.39
30849-140	5.70
30849-140	5.95
30849-140	6.109
30849-140	6.57
30849-153	7.29
30849-154	7.29
30849-155	7.29
30849-156	7.29
30849-157	7.29
30849-158	7.29
30849-171	5.22
30849-172	5.22
30849-173	5.22
30849-402	8.60
30849-403	8.60
30849-404	8.60
30849-405	8.60
30849-406	8.60
30849-407	8.60
30849-658	8.60
30849-670	8.60
30849-682	8.60
30849-694	8.60
30849-708	8.60
30849-714	8.60
30849-749	7.10
30849-750	7.10
30849-751	7.10
30849-752	7.10
30849-753	7.10
30849-754	7.10
30849-755	7.10
30850-354	5.57
30860-501	6.120
30860-502	6.120
30860-503	6.120
30860-504	6.120
30860-505	6.120
30860-510	6.120
30860-511	6.120
30860-512	6.120
30860-513	6.120
30860-514	6.120
30860-519	6.122

Appendix

Part no.	Page
30860-520	6.122
30860-521	6.122
30925-001	11.11
30925-002	11.11
30925-003	11.11
30925-004	11.11
30925-005	11.11
30925-006	11.11
31006-677	9.6
31591-422	8.15
31596-423	8.15
31596-575	8.15
31596-576	8.15
31596-791	8.13
31596-792	8.13
31596-899	8.13
31596-900	8.13
32405-024	2.13
32405-025	2.13
32405-026	2.13
32405-027	2.13
32405-028	2.13
32405-029	2.13
32405-033	2.13
32405-034	2.13
32405-035	2.13
32405-038	2.13
32405-039	2.13
32405-040	2.13
34560-001	6.28
34560-020	6.28
34560-028	6.28
34560-040	6.28
34560-042	6.28
34560-063	6.28
34560-084	6.28
34560-101	6.28
34560-120	6.28
34560-128	6.28
34560-140	6.28
34560-142	6.28
34560-163	6.28
34560-184	6.28
34560-185	6.20
34560-185	6.21
34560-187	6.20
34560-187	6.21
34560-189	6.20
34560-189	6.21
34560-191	6.20
34560-191	6.21
34560-193	6.20
34560-193	6.21
34560-195	6.20
34560-195	6.21
34560-201	6.28
34560-201	6.99
34560-220	6.28
34560-220	6.99
34560-228	5.31
34560-228	5.54
34560-228	5.67
34560-228	5.89
34560-228	6.28
34560-228	6.99
34560-240	6.28
34560-240	6.99
34560-242	5.31
34560-242	5.54
34560-242	5.67
34560-242	5.89
34560-242	6.28
34560-242	6.99
34560-263	5.31
34560-263	5.54
34560-263	5.67
34560-263	5.89
34560-263	6.28
34560-263	6.99
34560-284	5.31
34560-284	5.54
34560-284	5.67
34560-284	5.89
34560-284	6.28
34560-284	6.99
34560-285	6.20
34560-285	6.21
34560-287	6.20
34560-287	6.21
34560-289	6.20
34560-289	6.21
34560-291	6.20
34560-291	6.21
34560-293	6.20
34560-293	6.21
34560-295	6.20
34560-295	6.21
34560-301	6.28
34560-301	6.99
34560-320	6.28
34560-320	6.99
34560-328	5.31
34560-328	6.28
34560-328	6.99
34560-340	6.28
34560-340	6.99
34560-342	5.31
34560-342	6.28
34560-342	6.99
34560-363	5.31
34560-363	6.28
34560-363	6.99
34560-384	5.31
34560-384	6.28
34560-384	6.99
34560-401	6.30
34560-420	6.30
34560-428	6.30
34560-440	6.30
34560-442	6.30
34560-463	6.30
34560-484	6.30
34560-485	6.20
34560-485	6.21
34560-487	6.20
34560-487	6.21
34560-489	6.20
34560-489	6.21
34560-491	6.20
34560-491	6.21
34560-493	6.20
34560-493	6.21
34560-495	6.20
34560-495	6.21
34560-496	6.20
34560-496	6.21
34560-501	6.100
34560-501	6.30
34560-520	6.100
34560-520	6.30
34560-528	5.32
34560-528	5.67
34560-528	5.89
34560-528	6.100
34560-528	6.30
34560-540	6.100
34560-540	6.30
34560-542	5.32
34560-542	5.67
34560-542	5.89
34560-542	6.100
34560-542	6.30
34560-563	5.32
34560-563	5.67
34560-563	5.89
34560-563	6.100
34560-563	6.30
34560-584	5.32
34560-584	5.67
34560-584	5.89
34560-584	6.100
34560-584	6.30
34560-601	6.30
34560-620	6.30
34560-628	6.30
34560-640	6.30
34560-642	6.30
34560-663	6.30
34560-684	6.30
34560-701	6.100
34560-701	6.30
34560-720	6.100
34560-720	6.30
34560-728	5.32
34560-728	5.67
34560-728	5.89
34560-728	6.100
34560-728	6.30
34560-740	6.100
34560-740	6.30
34560-742	5.32
34560-742	5.67
34560-742	5.89
34560-742	6.100
34560-742	6.30
34560-763	5.32
34560-763	5.67
34560-763	5.89
34560-763	6.100
34560-763	6.30
34560-784	5.32
34560-784	5.57
34560-784	5.67
34560-784	5.89
34560-784	6.100
34560-784	6.30
34560-785	6.20
34560-785	6.21
34560-787	6.20
34560-787	6.21
34560-789	6.20
34560-789	6.21
34560-791	6.20
34560-791	6.21
34560-793	6.20
34560-793	6.21
34560-801	6.30
34560-820	6.30
34560-828	6.30
34560-840	6.30
34560-842	6.30
34560-863	6.30
34560-884	6.30
34560-891	6.39
34560-892	6.39
34560-893	6.39
34560-894	6.39
34560-900	6.39
34560-920	6.100
34560-920	6.30

Appendix

Part no.	Page
34560-928	5.32
34560-928	5.67
34560-928	5.89
34560-928	6.100
34560-928	6.30
34560-940	6.100
34560-940	6.30
34560-942	5.32
34560-942	5.67
34560-942	5.89
34560-942	6.100
34560-942	6.30
34560-963	5.32
34560-963	5.67
34560-963	5.89
34560-963	6.100
34560-963	6.30
34560-984	5.32
34560-984	5.67
34560-984	5.89
34560-984	6.100
34560-984	6.30
34561-001	6.101
34561-001	6.31
34561-020	6.101
34561-020	6.31
34561-028	5.33
34561-028	6.101
34561-028	6.31
34561-040	6.101
34561-040	6.31
34561-042	5.33
34561-042	6.101
34561-042	6.31
34561-063	5.33
34561-063	6.101
34561-063	6.31
34561-084	5.33
34561-084	6.101
34561-084	6.31
34561-101	6.101
34561-101	6.31
34561-120	6.101
34561-120	6.31
34561-128	5.33
34561-128	6.101
34561-128	6.31
34561-140	6.101
34561-140	6.31
34561-142	5.33
34561-142	6.101
34561-142	6.31
34561-163	5.33
34561-163	6.101
34561-163	6.31
34561-184	5.33
34561-184	6.101
34561-184	6.31
34561-185	6.24
34561-187	6.24
34561-189	6.24
34561-197	6.24
34561-201	6.101
34561-201	6.31
34561-220	6.101
34561-220	6.31
34561-228	5.33
34561-228	6.101
34561-228	6.31
34561-240	6.101
34561-240	6.31
34561-242	5.33
34561-242	6.101
34561-242	6.31
34561-263	5.33
34561-263	6.101
34561-263	6.31
34561-284	5.33
34561-284	6.101
34561-284	6.31
34561-320	6.104
34561-320	6.33
34561-328	5.35
34561-328	5.68
34561-328	5.90
34561-328	6.104
34561-328	6.33
34561-340	6.104
34561-340	6.33
34561-342	5.35
34561-342	5.68
34561-342	5.90
34561-342	6.104
34561-342	6.33
34561-363	5.35
34561-363	5.68
34561-363	5.90
34561-363	6.104
34561-363	6.33
34561-384	5.35
34561-384	5.68
34561-384	5.90
34561-384	6.104
34561-384	6.33
34561-484	5.35
34561-484	5.68
34561-484	5.90
34561-484	6.104
34561-484	6.33
34561-485	6.24
34561-487	6.24
34561-489	6.24
34561-497	6.24
34561-501	5.34
34561-501	6.102
34561-501	6.32
34561-520	5.34
34561-520	6.102
34561-520	6.32
34561-528	5.34
34561-528	6.102
34561-528	6.32
34561-540	5.34
34561-540	6.102
34561-540	6.32
34561-542	5.34
34561-542	6.102
34561-542	6.32
34561-563	5.34
34561-563	6.102
34561-563	6.32
34561-584	5.34
34561-584	6.102
34561-584	6.32
34561-750	6.47
34561-750	6.83
34561-752	6.47
34561-752	6.83
34561-763	6.47
34561-763	6.83
34561-764	6.47
34561-764	6.83
34561-777	6.90
34561-779	6.90
34562-745	5.37
34562-745	5.94
34562-745	6.59
34562-746	5.37
34562-746	5.64
34562-746	5.94
34562-746	6.59
34562-747	5.37
34562-747	5.64
34562-747	5.94
34562-747	6.59
34562-748	5.37
34562-748	5.64
34562-748	5.94
34562-748	6.59
34562-749	5.37
34562-749	5.94
34562-749	6.59
34562-750	5.37
34562-750	5.64
34562-750	5.94
34562-750	6.59
34562-751	5.37
34562-751	5.64
34562-751	5.94
34562-751	6.59
34562-752	5.37
34562-752	5.64
34562-752	5.94
34562-752	6.59
34562-753	5.37
34562-753	5.94
34562-753	6.59
34562-754	5.37
34562-754	5.94
34562-754	6.59
34562-755	5.37
34562-755	5.94
34562-755	6.59
34562-756	5.37
34562-756	5.94
34562-756	6.59
34562-757	5.37
34562-757	5.94
34562-757	6.59
34562-758	5.37
34562-758	5.94
34562-758	6.59
34562-759	5.37
34562-759	5.94
34562-759	6.59
34562-760	5.37
34562-760	5.64
34562-760	5.94
34562-760	6.59
34562-761	5.36
34562-761	5.75
34562-761	6.60
34562-762	5.36
34562-762	5.75
34562-762	6.60
34562-763	5.36
34562-763	5.75
34562-763	6.60
34562-764	5.36
34562-764	5.75
34562-764	6.60
34562-823	5.43
34562-823	5.75
34562-823	5.97
34562-823	6.61
34562-824	5.43
34562-824	5.75
34562-824	5.97
34562-824	6.61
34562-826	5.43

Appendix

Part no.	Page
34562-826	5.75
34562-826	5.97
34562-826	6.61
34562-827	5.43
34562-827	5.75
34562-827	5.97
34562-827	6.61
34562-833	5.43
34562-833	5.75
34562-833	5.97
34562-833	6.61
34562-834	5.43
34562-834	5.75
34562-834	5.97
34562-834	6.61
34562-836	5.43
34562-836	5.75
34562-836	5.97
34562-836	6.61
34562-837	5.43
34562-837	5.75
34562-837	5.97
34562-837	6.61
34562-843	5.43
34562-843	5.75
34562-843	5.97
34562-843	6.61
34562-844	5.43
34562-844	5.75
34562-844	5.97
34562-844	6.61
34562-846	5.43
34562-846	5.75
34562-846	5.97
34562-846	6.61
34562-847	5.43
34562-847	5.75
34562-847	5.97
34562-847	6.61
34562-881	5.41
34562-881	5.74
34562-881	5.93
34562-881	6.106
34562-881	6.37
34562-881	6.94
34562-882	5.41
34562-882	5.74
34562-882	5.93
34562-882	6.106
34562-882	6.37
34562-883	5.41
34562-883	5.74
34562-883	5.93
34562-883	6.106
34562-883	6.37
34562-884	5.41
34562-884	5.74
34562-884	5.93
34562-884	6.106
34562-884	6.37
34562-885	5.41
34562-885	5.74
34562-885	5.93
34562-885	6.106
34562-885	6.37
34563-001	6.59
34563-002	6.59
34563-003	6.59
34563-004	6.59
34563-009	6.59
34563-014	6.59
34563-019	6.59
34563-024	6.59
34564-108	5.38
34564-108	5.71
34564-108	5.96
34564-108	6.58
34564-109	5.38
34564-109	5.71
34564-109	5.96
34564-109	6.58
34564-208	5.38
34564-208	5.71
34564-208	5.96
34564-208	6.58
34564-881	5.41
34564-881	5.74
34564-881	5.93
34564-881	6.106
34564-881	6.37
34564-882	5.41
34564-882	5.74
34564-882	5.93
34564-882	6.106
34564-882	6.37
34564-883	5.41
34564-883	5.74
34564-883	5.93
34564-883	6.106
34564-883	6.37
34564-884	5.41
34564-884	5.74
34564-884	5.93
34564-884	6.37
34564-885	5.41
34564-885	5.74
34564-885	5.93
34564-885	6.37
34564-891	6.39
34564-892	6.39
34564-893	6.39
34564-900	6.39
34565-196	6.104
34565-196	6.33
34565-396	6.104
34565-396	6.33
34566-201	6.99
34566-220	6.99
34566-228	6.99
34566-240	6.99
34566-242	6.99
34566-263	6.99
34566-284	6.99
34566-301	6.99
34566-320	6.99
34566-328	6.99
34566-340	6.99
34566-342	6.99
34566-363	6.99
34566-384	6.99
34566-501	6.100
34566-520	6.100
34566-528	6.100
34566-540	6.100
34566-542	6.100
34566-563	6.100
34566-584	6.100
34566-701	6.100
34566-720	6.100
34566-728	6.100
34566-740	6.100
34566-742	6.100
34566-763	6.100
34566-784	6.100
34571-605	5.21
34571-606	5.21
34571-607	5.21
34571-608	5.21
34571-609	5.21
34571-610	5.21
34571-611	5.21
34571-612	5.21
34571-613	5.21
34571-614	5.21
34571-615	5.21
34571-616	5.21
34571-617	5.21
34571-618	5.21
34571-619	5.21
34571-620	5.21
34571-621	5.21
34571-622	5.21
34571-623	5.21
34571-624	5.21
34579-002	6.20
34579-002	6.21
34579-012	6.20
34579-012	6.21
34579-038	6.20
34579-038	6.21
34579-230	6.105
34579-230	6.36
34579-231	6.105
34579-231	6.36
34579-232	6.41
34579-233	6.41
34579-234	6.41
34579-235	6.41
34579-300	6.20
34579-300	6.21
34812-100	7.76
34812-102	7.76
34812-103	7.76
34812-108	7.75
34812-110	7.75
34812-112	7.75
34812-114	7.75
34812-121	7.75
34812-128	7.75
34812-142	7.75
34812-200	7.76
34812-208	7.77
34812-210	7.77
34812-212	7.77
34812-214	7.77
34812-221	7.77
34812-228	7.77
34812-242	7.77
34812-308	7.77
34812-310	7.77
34812-312	7.77
34812-314	7.77
34812-321	7.77
34812-328	7.77
34812-342	7.77
34812-408	7.76
34812-410	7.76
34812-412	7.76
34812-414	7.76
34812-421	7.76
34812-428	7.76
34812-442	7.76
34812-600	7.76
34812-601	7.76
34812-603	7.76
34812-608	7.75
34812-610	7.75
34812-612	7.75
34812-614	7.75
34812-621	7.75

Appendix

Part no.	Page
34812-628	7.75
34812-642	7.75
34812-701	7.76
34812-708	7.77
34812-710	7.77
34812-712	7.77
34812-714	7.77
34812-721	7.77
34812-728	7.77
34812-742	7.77
34812-808	7.77
34812-810	7.77
34812-812	7.77
34812-814	7.77
34812-821	7.77
34812-828	7.77
34812-842	7.77
34812-908	7.77
34812-910	7.77
34812-912	7.77
34812-914	7.77
34812-921	7.77
34812-928	7.77
34812-942	7.77
34812-958	7.76
34812-960	7.76
34812-962	7.76
34812-964	7.76
34812-971	7.76
34812-978	7.76
34812-992	7.76
34813-100	7.76
34813-102	7.76
34813-103	7.76
34813-108	7.75
34813-110	7.75
34813-112	7.75
34813-114	7.75
34813-121	7.75
34813-128	7.75
34813-142	7.75
34813-200	7.76
34813-208	7.77
34813-210	7.77
34813-212	7.77
34813-214	7.77
34813-221	7.77
34813-228	7.77
34813-242	7.77
34813-408	7.76
34813-410	7.76
34813-412	7.76
34813-414	7.76
34813-421	7.76
34813-428	7.76
34813-442	7.76
34813-600	7.76
34813-601	7.76
34813-603	7.76
34813-608	7.75
34813-610	7.75
34813-612	7.75
34813-614	7.75
34813-621	7.75
34813-628	7.75
34813-642	7.75
34813-701	7.76
34813-708	7.77
34813-710	7.77
34813-712	7.77
34813-714	7.77
34813-721	7.77
34813-728	7.77
34813-742	7.77
34813-908	7.77
34813-910	7.77
34813-912	7.77
34813-914	7.77
34813-921	7.77
34813-928	7.77
34813-942	7.77
34813-958	7.76
34813-960	7.76
34813-962	7.76
34813-964	7.76
34813-971	7.76
34813-978	7.76
34813-992	7.76
40304-050	3.2
40304-051	3.2
40304-052	3.2
40304-053	3.2
40304-054	3.2
40304-055	3.2
40304-074	3.4
40304-075	3.4
40304-076	3.4
40304-077	3.4
40304-078	3.4
40304-079	3.4
40304-080	3.4
40304-081	3.4
40304-082	3.4
40304-083	3.4
43105-999	9.10
43105-999	9.11
43105-999	9.12
60100-302	3.14
60100-398	3.42
60100-478	3.43
60100-559	3.43
60103-010	3.21
60103-011	3.21
60103-131	1.234
60103-131	3.38
60103-131	4.10
60103-131	4.12
60103-131	4.6
60103-131	4.7
60103-137	1.234
60103-137	3.29
60103-137	3.30
60103-137	3.31
60103-137	3.38
60103-137	3.44
60103-137	4.10
60103-137	4.12
60103-137	4.6
60103-137	4.7
60103-141	1.234
60103-141	3.38
60103-141	4.10
60103-141	4.12
60103-141	4.6
60103-141	4.7
60110-200	3.52
60110-201	2.35
60110-201	3.52
60110-202	3.52
60110-203	3.52
60110-204	3.52
60110-205	3.52
60110-206	3.52
60110-207	3.52
60110-208	3.52
60110-209	3.52
60110-210	3.52
60110-211	3.52
60110-212	3.52
60110-214	3.52
60110-216	3.52
60110-217	3.52
60110-219	3.54
60110-220	2.35
60110-220	3.55
60110-221	3.55
60110-222	3.55
60110-223	3.55
60110-224	3.55
60110-225	3.55
60110-226	3.55
60110-227	3.55
60110-228	3.55
60110-229	3.55
60110-230	3.55
60110-231	3.55
60110-232	3.56
60110-233	3.57
60110-240	3.62
60110-241	3.62
60110-242	3.62
60110-243	3.61
60110-244	3.61
60110-245	3.61
60110-246	3.63
60110-247	3.63
60110-266	3.52
60110-267	3.55
60110-270	3.53
60110-280	3.59
60110-281	3.59
60110-282	3.59
60110-283	3.60
60110-284	3.60
60110-285	3.60
60110-290	3.58
60110-291	3.58
60110-292	3.58
60110-293	3.64
60110-294	3.64
60110-295	3.64
60110-296	3.64
60110-300	3.77
60110-301	3.77
60110-302	3.77
60110-303	3.78
60110-304	3.78
60110-305	3.78
60110-306	3.75
60110-307	3.75
60110-308	3.75
60110-309	3.75
60110-310	3.76
60110-313	3.48
60110-314	3.48
60110-315	3.48
60110-316	3.49
60110-320	3.69
60110-321	3.69
60110-322	3.69
60110-323	3.69
60110-324	3.69
60110-325	3.69
60110-326	3.65
60110-326	3.69
60110-327	3.65
60110-327	3.69
60110-328	3.65
60110-328	3.69
60110-329	3.69

Appendix

Part no.	Page
60110-330	3.69
60110-331	3.69
60110-332	3.69
60110-340	3.68
60110-341	3.68
60110-342	3.68
60110-343	3.66
60110-344	3.66
60110-345	3.66
60110-346	3.67
60110-347	3.67
60110-348	3.67
60110-349	3.68
60110-350	3.68
60110-351	3.68
60110-352	3.66
60110-353	3.66
60110-354	3.66
60110-355	3.67
60110-356	3.67
60110-357	3.67
60110-360	3.38
60110-360	3.58
60110-360	3.68
60110-361	3.38
60110-361	3.58
60110-361	3.68
60110-362	3.58
60110-362	3.68
60110-365	3.65
60110-366	3.65
60110-370	3.74
60110-371	3.74
60113-267	1.110
60113-267	1.170
60113-267	1.18
60113-267	1.192
60113-267	1.46
60113-267	1.60
60113-267	1.77
60114-121	1.291
60114-121	1.292
60114-121	1.303
60114-121	1.304
60114-514	1.281
60114-514	1.296
60114-514	1.308
60114-515	1.281
60114-515	1.296
60114-515	1.308
60114-517	1.308
60114-518	1.308
60118-144	3.37
60118-145	3.37
60118-339	3.45
60118-340	3.45
60118-341	3.45
60118-342	3.45
60118-343	3.45
60118-344	3.45
60118-345	3.45
60118-346	3.45
60118-434	3.33
60118-435	3.14
60118-457	1.342
60118-457	3.7
60118-458	1.342
60118-458	3.7
60118-459	1.342
60118-459	3.7
60118-472	1.117
60118-472	1.151
60118-472	1.154
60118-472	1.176
60118-472	1.198
60118-472	1.24
60118-472	1.25
60118-472	1.52
60118-472	1.66
60118-472	1.67
60118-472	1.93
60118-472	1.94
60118-473	1.342
60118-473	3.7
60118-474	1.342
60118-474	3.7
60118-475	1.342
60118-475	3.7
60118-476	1.342
60118-476	3.7
60118-515	3.45
60118-518	3.44
60118-519	3.44
60118-520	3.44
60126-118	3.13
60126-118	3.46
60197-019	4.17
60197-019	4.61
60197-053	1.234
60197-053	3.29
60197-053	3.30
60197-053	3.31
60197-053	3.38
60197-053	4.7
60200-001	5.115
60200-027	5.115
60220-003	1.110
60220-003	1.18
60220-003	1.46
60220-003	1.60
60220-003	1.77
60224-009	5.115
60224-011	5.115
60225-012	5.114
60225-015	5.114
60225-052	4.17
60225-053	4.17
60229-001	5.114
60229-002	5.114
60229-003	5.114
60229-004	5.114
60239-001	2.40
60239-004	2.41
60239-006	2.38
60239-012	2.42
60239-013	2.39
60239-013	2.42
60239-014	2.39
60239-014	2.42
60239-020	2.38
60239-020	2.45
60239-021	2.41
60239-025	2.38
60239-026	2.40
60239-026	2.41
60239-030	2.38
60239-031	2.40
60239-031	2.41
60239-031	2.44
60239-035	2.43
60239-040	2.43
60239-051	2.43
60239-060	2.40
60239-062	2.39
60239-062	2.42
60240-006	2.44
60502-003	5.110
60704-020	3.38
60713-001	4.9
60713-002	4.9
60713-003	4.9
60713-004	4.9
60713-169	4.15
60713-169	4.8
60713-170	4.8
60713-243	4.14
60713-244	4.14
60713-245	4.14
60713-246	4.14
60713-331	4.15
60713-501	4.10
60713-600	8.78
60713-600	8.81
60713-868	4.12
60715-005	1.166
60715-005	1.188
60715-005	1.265
60715-005	1.294
60715-005	1.295
60715-005	1.306
60715-005	1.307
60715-005	1.35
60715-005	1.72
60715-005	4.62
60715-006	4.62
60715-007	4.62
60715-017	4.59
60715-018	4.59
60715-020	4.58
60715-021	4.58
60715-023	4.58
60715-028	4.60
60715-029	4.60
60715-030	4.58
60715-046	4.67
60715-049	3.6
60715-050	3.6
60715-132	4.65
60715-133	4.65
60715-136	4.63
60715-137	4.63
60715-138	4.66
60715-139	4.66
60715-140	4.23
60715-141	4.23
60715-142	4.23
60715-143	4.24
60715-144	4.24
60715-145	4.24
60715-146	4.25
60715-147	4.25
60715-148	4.26
60715-149	4.26
60715-150	4.27
60715-151	4.27
60715-152	4.28
60715-153	4.28
60715-154	4.29
60715-155	4.29
60715-156	4.23
60715-157	4.24
60715-158	4.25
60715-159	4.26
60715-159	4.27
60715-160	4.28
60715-160	4.29
60715-182	4.23
60715-183	4.24
60715-184	4.25
60715-185	4.26

Appendix

Part no.	Page
60715-185	4.27
60715-186	4.28
60715-186	4.29
60715-187	4.24
60715-188	4.25
60715-189	4.26
60715-189	4.27
60715-190	4.28
60715-190	4.29
60800-032	10.27
60800-039	7.104
60800-045	7.104
60800-064	11.11
60800-080	11.11
60800-123	9.10
60800-123	9.11
60800-123	9.12
60800-123	9.13
60800-123	9.14
60800-123	9.15
60800-123	9.17
60800-123	9.20
60800-123	9.3
60800-123	9.4
60800-123	9.5
60800-123	9.6
60800-123	9.7
60800-123	9.8
60800-123	9.9
60800-834	10.27
60807-011	7.106
60807-011	7.50
60807-011	7.56
60807-181	7.106
60807-181	7.22
60807-181	7.35
60807-181	7.42
60807-181	7.47
60807-181	7.50
60807-181	7.56
60807-183	7.106
60807-183	7.42
60807-183	7.47
60807-183	7.50
60807-183	7.56
60807-203	7.106
60807-203	7.56
60807-211	7.106
60807-211	7.56
60817-001	6.134
60817-015	6.134
60817-016	6.134
60817-026	6.134
60817-050	7.104
60817-051	7.104
60817-052	7.104
60817-053	6.134
60817-054	6.135
60817-055	7.103
60817-064	6.134
60817-067	7.103
60817-071	6.135
60817-072	7.103
60817-076	6.134
60817-078	6.132
60817-079	6.132
60817-080	6.134
60817-083	6.134
60817-085	6.134
60817-096	6.135
60817-097	6.135
60817-098	6.134
60817-102	6.134
60817-103	6.134
60817-149	6.134
60817-228	5.41
60817-228	5.74
60817-228	5.93
60817-228	6.124
60817-228	6.37
60817-228	6.39
60817-228	6.41
60817-228	7.102
60817-340	7.23
60817-341	7.23
60827-026	7.14
60829-008	7.44
60835-021	7.13
60835-022	7.13
60835-024	7.13
60850-171	5.62
60895-018	6.78
60895-018	6.79
60895-018	6.80
60895-018	6.83
60897-278	7.14
61000-007	7.62
61000-012	7.62
61000-177	7.62
62150-191	3.29
62150-191	3.30
62150-191	3.31
62150-191	3.38
62150-201	4.63
62150-201	4.66
62150-264	4.63
62150-264	4.66
62405-001	2.12
62405-002	2.12
62405-003	2.12
62405-004	2.12
62405-010	2.12
62405-011	2.12
62405-012	2.12
62405-013	2.12
62406-096	2.4
62406-096	2.5
64560-001	6.105
64560-001	6.36
64560-002	6.105
64560-002	6.36
64560-004	6.39
64560-005	6.37
64560-006	6.37
64560-008	6.39
64560-010	5.39
64560-010	5.70
64560-010	5.95
64560-010	6.57
64560-026	5.117
64560-026	5.28
64560-027	5.117
64560-027	5.28
64560-055	6.37
64560-057	6.39
64560-071	6.38
64560-071	9.22
64560-071	9.23
64560-071	9.26
64560-071	9.27
64560-072	6.38
64560-074	5.40
64560-074	5.73
64560-074	5.92
64560-074	6.36
64560-075	5.40
64560-075	5.73
64560-075	5.92
64560-075	6.36
64560-076	5.41
64560-076	5.74
64560-076	5.93
64560-076	6.37
64560-078	5.41
64560-078	5.74
64560-078	5.93
64560-078	6.37
64560-080	5.41
64560-080	5.74
64560-080	5.93
64560-080	6.37
64560-082	6.37
64560-085	6.38
64560-086	6.38
64560-089	6.38
64560-090	6.38
64560-091	6.38
64560-092	6.38
64560-096	6.105
64560-096	6.36
64560-098	6.105
64560-098	6.36
64560-143	6.38
64560-144	6.38
64560-145	6.38
64560-146	6.38
64560-166	6.37
64571-033	5.23
64571-033	5.61
64571-034	5.23
64571-034	5.61
64571-035	5.23
64571-035	5.61
64571-036	5.23
64571-036	5.61
69000-007	7.104
69000-969	7.104
69001-073	11.10
69001-106	11.6
69001-651	11.9
69001-652	11.9
69001-664	11.4
69001-677	11.4
69001-678	11.4
69001-679	11.4
69001-685	11.4
69001-691	11.4
69001-693	11.4
69001-696	11.4
69001-697	11.4
69001-698	11.4
69001-711	11.5
69001-712	11.5
69001-717	11.5
69001-718	11.5
69001-722	11.5
69001-723	11.5
69001-728	11.4
69001-733	11.5
69001-733	11.7
69001-733	9.10
69001-733	9.11
69001-733	9.12
69001-733	9.13
69001-733	9.14
69001-733	9.15
69001-733	9.16
69001-733	9.17
69001-733	9.2
69001-733	9.20

Appendix

Part no.	Page
69001-733	9.3
69001-733	9.4
69001-733	9.5
69001-733	9.6
69001-733	9.7
69001-733	9.8
69001-733	9.9
69001-755	11.5
69001-801	11.4
69001-816	11.4
69001-821	11.4
69001-826	11.4
69001-831	11.4
69001-846	11.5
69001-851	11.5
69001-853	11.5
69001-856	11.5
69001-860	11.5
69001-865	11.5
69001-866	11.5
69001-877	11.5
69001-879	11.5
69001-884	11.5
69001-905	11.5
69001-944	11.5
69001-976	11.4
69001-980	11.5
69001-980	11.7
69001-981	11.5
69001-981	11.7
69001-995	11.6
69004-042	11.23
69004-043	11.22
69004-044	11.22
69004-045	11.22
69004-046	11.23
69004-050	11.15
69004-051	11.15
69004-052	11.15
69004-053	11.15
69004-054	11.15
69004-055	11.15
69004-056	11.15
69004-057	11.15
69004-058	11.15
69004-059	11.14
69004-060	11.14
69004-061	11.14
69004-062	11.14
69004-063	11.14
69004-064	11.14
69004-065	11.14
69004-066	11.14
69004-067	11.14
69004-068	11.16
69004-069	11.16
69004-071	11.16
69004-072	11.16
69004-074	11.16
69004-075	11.16
69004-077	11.16
69004-078	11.16
69004-080	11.16
69004-083	11.16
69004-086	11.18
69004-087	11.18
69004-088	11.18
69004-089	11.18
69004-090	11.18
69004-091	11.18
69004-095	11.19
69004-098	11.20
69004-121	11.14
69004-122	11.14
69004-123	11.14
69004-124	11.16
69004-125	11.16
69004-126	11.16
69004-127	11.16
69004-128	11.16
69004-129	11.16
69004-130	11.18
69004-131	11.18
69004-155	11.21
69004-161	11.21
69004-165	11.21
69004-169	11.21
69004-240	11.14
69004-241	11.14
69004-242	11.14
69004-249	11.15
69004-250	11.15
69004-251	11.15
69004-252	11.15
69004-253	11.15
69004-254	11.15
69004-255	11.15
69004-256	11.15
69004-257	11.15
69004-258	11.14
69004-259	11.14
69004-260	11.14
69004-261	11.14
69004-262	11.14
69004-263	11.14
69004-264	11.14
69004-265	11.14
69004-266	11.14
69004-274	11.16
69004-275	11.16
69004-276	11.16
69004-277	11.16
69004-278	11.16
69004-279	11.16
69004-280	11.16
69004-281	11.16
69004-282	11.16
69004-284	11.16
69004-286	11.16
69004-287	11.16
69004-288	11.16
69004-289	11.16
69004-290	11.16
69004-291	11.16
69005-596	11.4
89009-001	3.23
89009-001	5.117
89009-001	6.68
89009-001	7.113
A1086CHSCFG	2.22
A1086CHSCFGW	2.22
A10SPK8C	2.23
A12106CHSCFG	2.22
A12106CHSCFGW	2.22
A12SPK10C	2.23
A14128CHSCFG	2.22
A14128CHSCFGW	2.22
A14SPK12C	2.23
A16148CHSCFG	2.22
A16148CHSCFGW	2.22
A16SPK14C	2.23
A181610CHSCFG	2.22
A181610CHSCFGW	2.22
A18SPK16C	2.23
A664CHSCFG	2.22
A664CHSCFGW	2.22
A6SPK6C	2.23
A864CHSCFG	2.22
A864CHSCFGW	2.22
A8SPK6C	2.23
ADP2	3.14
AL48	2.22
ANMV6	2.16
ANMV6	2.18
CMFK	2.4
CMFK	2.5
D19BPT1RU	1.210
D19BPT1RU	1.222
D19BPT1RU	3.5
D19BPT2RU	3.5
D19FVT69B	1.143
D19FVT69B	1.344
D19FVT69B	3.12
D19FVT912B	1.143
D19FVT912B	1.344
D19FVT912B	3.12
DCHD2	1.339
DCHD2	3.10
DCHS1	1.339
DCHS1	3.10
DCHS2	1.339
DCHS2	3.10
DPX-AF1	3.48
DPX-CC2-TR	3.48
DPX-T1DP1	3.48
DPX-T3H1	3.48
DV10D7	1.340
E4DR19FM45U	1.337
EC3D7	1.340
EC6D7	1.340
ECT19	1.341
EDR19FM45U	1.336
EJ2DR	1.336
EJ2DR	1.337
EJ2DR	1.338
EMX111	3.47
EMX888	3.47
ES1224B	1.336
ES1224B	1.338
ES1224B250	1.336
ES1224B250	1.338
EWFT	1.336
EWFT	1.337
EWFT	1.341
LMK20	2.12
LMK30	2.12
LMK40	2.12
P4SPOOL	1.336
P4SPOOL	1.337
P4SPOOL	1.341
Q12126PCD	2.18
Q12129PCD	2.18
Q1286PCD	2.18
Q1289PCD	2.18
Q1686PCD	2.18
Q1689PCD	2.18
Q20129PCD	2.18
Q20158PCD	2.18
Q202013PCICC	2.16
Q202018PCICC	2.16
Q2020PI	2.17
Q241612PCD	2.18
Q24169PCD	2.18
Q302013PCI	2.16
Q302013PCICC	2.16
Q302018PCI	2.16
Q3020PI	2.17
Q303013PCI	2.16
Q303013PCICC	2.16
Q303018PCI	2.16

Appendix

Part no.	Page
Q303018PCICC	2.16
Q3030PI	2.17
Q402013PCI	2.16
Q402018PCICC	2.16
Q4020PI	2.17
Q403013PCI	2.16
Q403013PCICC	2.16
Q403018PCI	2.16
Q403018PCICC	2.16
Q4030PI	2.17
Q554PCD	2.18
Q886PCD	2.18
QBIK	2.17
QDEHK	2.18
QDMFK	2.18
QIDR351505	2.17
QIDR352505	2.17
QIDR353505	2.17
QIHK	2.16
QIMFK	2.16
QIPDF	2.17
T150126G150	4.32
T200226G150	4.33
T290426G150	4.34
T430626G150	4.35
T430826G150	4.36
T431026G150	4.37
T501226G150	4.38
T531926G150	4.39
T622226G150	4.40
T703626G150	4.41
T706026G150	4.42
TE090624010	4.52
TE121024010	4.53
TE121048010	4.53
TE162024010	4.54
TE162048010	4.54
TOPTKSPL	1.321
TX231426100	4.46
TX231448100	4.46
TX332826100	4.47
TX332848100	4.47
TX385626100	4.48
TX385648100	4.48
TX528326100	4.49
TX528348100	4.49
VAMONITOR	1.255

Appendix

10", 19"

10" wall mounted case, epcase **2.32**
19" cabinet accessories
19" assembly kits 3.17
19" cable ducting 3.8
19" cable trays 3.9
19" distribution field 3.14
19" drawers 3.13
19" equipment shelves 3.11
19" front panels, filler panels 3.2
19" module support 3.16
19" mounting brackets 3.15
19" mounting trays 3.15
19" panel/slide mounts . . . . . **see panel/slide mounts**
19" vented front panels **3.6**
19" chassis
inpac 6.128
multipacPRO 6.112
19" fan trays **4.4**
19" fans **4.6**
19" lab racks **1.354**
19" wall mounted cases
CONCEPTLINE 2.2
epcase 2.24

A

A48, wall mounted cases **2.20**
Abbreviations **12.8**
AC fan trays **4.16**
AC input module with filter **8.111**
AC mains switching for VARISTAR LHX 20 . . . . . **1.234**
AC/DC 19" compatible linear regulators **9.10**
AC/DC switched mode power supplies
19" compatible 9.2
Open Frame 9.21
Accessories
Busbars 3.39, 11.10
Climate control 4.58
Connectors 11.2
Electrics 3.32
FPCS front panel component system 11.12
for cabinets and wall mounted cases 3.0
for desktop enclosures 5.108
for PCBs 7.102
for power supplies 9.16
for systems 8.106
Mechanics 3.2
Monitors, keyboards 3.44
Power control socket strips **3.72**
Socket strips 3.50, 3.72
Telescopic slides 3.24
Addresses **12.78**
Adjustable feet
for eurorack 1.290, 1.302
for VARISTAR 1.28, 1.40, 1.70, 1.166, 1.190
AdvancedMC carriers **8.26**
AdvancedMC modules **8.56**
AdvancedTCA
Backplanes 8.19
Systems 8.2
Air baffles
for pusher fans 4.9
for ratiopacPRO 5.26
Air conditioners **4.1**
TX series, GLIMAGUARD air/air heat exchangers . . . 4.44
TE series, Peltier, thermoelectric coolers 4.50
T series air conditioners 4.30
Air/air heat exchangers, CLIMAGUARD serie **4.44**
Air filters
for AdvancedTCA 8.23
for epcase 2.28, 2.33
for MicroTCA 8.55
for propacPRO 5.61
for ratiopacPRO air 5.23
Air filtered fans 4.20

Appendix

Air/water heat exchangers VARISTAR LHX . . . 1.224, 1.236
Assembly cases, INLINE 2.11
Assembly material for frame type plug-in units . 7.77, 7.92
Assembly tool 7.112

B

Backplanes
AdvancedTCA 8.19
CompactPCI, Serial, PlusIO 10.4
Dual star, full mesh 8.19
Overview 10.0
Power piggyback 10.18
PXI 10.11
Test adaptors 10.20
VME/VME64x bus 10.13
VXS 10.13
Base plates
for eurorack 1.280, 1.296, 1.308
for NOVASTAR 1.249, 1.266
for multipacPRO 6.120
for VARISTAR 1.15, 1.36, 1.73, 1.137, 1.175, 1.199
Bases/plinths
for eurorack 1.280, 1.296, 1.308
for NOVASTAR 1.250, 1.266
for VARISTAR 1.16, 1.36, 1.59, 1.73, 1.139, 1.176, 1.200
Bridges CompactPCI, PXI 10.11
Brush strip for VARISTAR 1.104
BS (British Standard) socket strip 3.56
Busbars
Cabinet accessories 3.39
for PCBs 11.10

C

C profile rails
for 19" lab rack 1.359
for VARISTAR 1.24, 1.66, 1.159, 1.162
Cabinets
Accessories 3.0
Aisle containment 1.200, 1.202
etsirack 1.346
eurorack 1.270
Lab rack 1.354
LHX with air/water heat exchanger 1.224
NOVASTAR 1.240
NET, cabling 1.126
Overview 1.0
Outdoor cabinets 1.316
Open frame racks 1.334
PROLINE 1.362
Server cabinets 1.130
VARISTAR platform 1.2
Cable brackets, for VARISTAR 1.186, 1.210
Cable channels 3.21
Cable ducting
Cabinet accessories 3.8
for eurorack 1.297, 1.305
for LAN wall mounted enclosures 2.38, 2.41, 2.45
for NOVASTAR 1.247, 1.262
for VARISTAR 1.51, 1.83, 1.155
with C profile, VARISTAR 1.185, 1.209
Cable eyes
for 19" lab rack 1.359
for epcase 2.31
for eurorack 1.283
for VARISTAR 1.24
Cable holders
for compacPRO 5.81
for propacPRO 5.65
for ratiopacPRO 5.26
Cable ladder for VARISTAR 1.160
Cable retention for C profiles 3.20
Cable shells
for eurorack 1.283
for VARISTAR 1.24, 1.66, 1.162
Cable support 3.21
Cable support rails
for 19" lab rack 1.358
for epcase 2.31
for VARISTAR 1.24, 1.66, 1.161, 1.161, 1.209
Cable ties 3.20
Cable trays
Cabinet accessories 3.9
for eurorack 1.287
for VARISTAR 1.160
for excess cable length for VARISTAR 1.163
CAD drawings 0.8
Cage nuts 3.18
Carriers, AdvancedMC 8.26
Carrying handles
for cases 5.108
for compacPRO 5.86
for propacPRO 5.60
for ratiopacPRO 5.26
Cases
Desktop cases 5.0
minipac, small cases 7.98
Wall mounted cases 0.0
Castors
for eurorack 1.290, 1.302
for NOVASTAR 1.259
for VARISTAR 1.28, 1.40, 1.70, 1.132, 1.166, 1.190
CE Standards 12.7
Cermet potentiometer,
FPCS (front panel component systems) **11.21**
Certifications 0.8
Chassis Data Module (CDM) for AdvancedTCA 8.25
Chassis Monitoring Module (CMM) 8.107
Circulation fans 4.6
Clamp case, INLINE 2.10
Clamp distributor 3.34
CLIMAGUARD, TX series, air/air heat exchangers 4.44
Climate control, overview 4.0
Clip-on plastic front panels for cabinets 3.5
Cold aisle containment, for cabinets 1.200, 1.202
Combined mounting, for europacPRO 6.57
COMLINE, outdoor cabinets 1.318
compacPRO, cases 5.76
CompactPCI
Backplanes 10.4
Bridges 10.11
for telecom applications 8.86
Overview, chapter Systems 8.68
Power supply, AC/DC 9.22
CompactPCI Serial, CompactPCI PlusIO
Backplanes 10.4
Systems 8.70, 8.73

Appendix

comptec, cases **5.100**
CONCEPTLINE, wall mounted cases **2.2**
Connecting cables
for fan trays 4.13
for Wieland connectors 3.69
Schuko/UTE, BS, USA, IEC 3.38
Connection plates
for VARISTAR **1.37, 1.43, 1.74, 1.171, 1.195**
Connectors
Overview 11.2
H 15 F 9.16, 11.4
Housings for connectors 11.6
Types B, C, R, D, H, E, F, G, H, M 11.4
Containment, for cabinet aisles **1.200, 1.202**
Conventional carriers, AdvancedMC **8.32**
Cooling concepts **4.2**
Covers
for filler modules, AdvancedMC modules 8.66
for slots 6.61
Cover panels, for VARISTAR **1.157, 1.169, 1.154**
Cover plates
for europacPRO subracks 6.118
for frame type plug-in units 7.76
for VARISTAR 1.104
Cube, MicroTCA **8.38**
Cutaway carriers, AdvancedMC **8.28**

D

DC fan trays **4.16**
DC/DC converters **9.13**
Decorative frames, for VARISTAR **1.30, 1.130, 1.192**
Depth members
for eurorack 1.297, 1.309
for VARISTAR 1.24, 1.51, 1.66, 1.83, 1.143
Desktop cases
Accessories 5.108
compacPRO 5.76
comptec 5.100
Overview 5.0
Project examples 5.5
propacPRO 5.44
ratiopacPRO 5.6
Dimension drawings
compacPRO 5.98
for cantilever extractor handle 7.43
for cantilever extractor handle type 2 . . . . . 7.44
for eurorack 1.274
for extractor handle for Multibus 7.45
for extractor handle in key form 7.48
for extractor handle in key form 2 . . . . . 7.51
for frame type plug-in units 7.80, 7.88
for front panels 7.25
for heavy duty XL insertion/extractor handle 7.30
for HF frame type plug-in units 7.94
for inpac 6.136
for NOVASTAR 1.242
for propacPRO 5.53
for ratiopacPRO 5.9
for ratiopacPRO air 5.16
for static cantilever handle 7.58
for VARISTAR 1.8
Guide rails 6.40
Test adaptors 10.20
DIN rail mounting, for power supplies **9.17**
Distribution box, for accessories **3.36**
Distribution cabinet, VARISTAR NET **1.126**
Distribution fields
Cabinet accessories 3.14
for epcase 10" 2.34
Divider plates
for europacPRO 6.60
for propacPRO 5.75
for ratiopacPRO 5.36
Document pocket, for cabinets **3.14**

Doors
for aisle containment 1.204
for compacPRO 5.85
for eurorack 1.292, 1.304
for NOVASTAR 1.246, 1.261
for VARISTAR 1.31, 1.71, 1.130, 1.192, 1.204
Door hinge brackets for eurorack 1.279, 1.293, 1.293
Double doors, for VARISTAR 1.32, 1.170, 1.194
Drawer with keyboard 3.45
Drilling template, front panel component system 11.23
Drive unit cables 8.110
Drive units for systems 8.108
Dual star backplanes 8.19

E

Earthquake resistant cabinet, VARISTAR 1.84
Edge protection for VARISTAR 1.104
Electronics cabinet, VARISTAR. 1.10
Embedded systems 8.0
EMC cabinet, VARISTAR 1.54
EMC gasketing
for cabinets 1.70
for europacPRO 6.53
for multipacPRO 6.121
for propacPRO 5.55
for propacPRO 5.65
for ratiopacPRO 5.23
for subracks for mobile railway applications 6.82
for VARISTAR 1.70
Front panels 7.6, 7.8
Systems - Accessories 8.106
Environmental protection 12.0
epcase, wall mounted cases 2.24
Equipment cables, cabinet accessories 3.38
Equipment shelves
Cabinet accessories 3.11
for 19" lab racks 1.360
for epcase 2.29, 2.33
for etsirack 1.351
for VARISTAR 1.47
ESD clips, for guide rails 6.41
ETSI panel/slide mounts for VARISTAR 1.45, 1.76
etsirack
Overview cabinets 1.346
Project examples 1.353
europacPRO
Dimensions 6.18
EMC shielding 6.52
for industrial applications 6.86
for mobile railway applications 6.70
for rugged applications. 6.92
Overview 6.2
Project examples 6.69, 6.85
Shielding 6.42
eurorack, cabinets 1.270
Express service 0.6
Extractor handles
Cantilever 7.37, 7.43
for Multibus 7.44
in key form 7.46, 7.48
Systems - Accessories 8.106

F

Fans
for epcase 2.27
Supplementary fan for pusher fans 4.13
Fan Control Module (FCM) 8.106
Fan trays
for AdvancedTCA 8.21
for MicroTCA 8.53
Overview 4.4
Selection guide 4.19
Fibre optic cable ducting for VARISTAR . 1.157, 1.186, 1.210
Fibre optic small case 2.38
Field Replaceable Units
for AdvancedTCA, MicroTCA 8.20, 8.53
Filler modules, AdvancedMC, MicroTCA 8.16
Flat top covers, for VARISTAR 1.35, 1.72, 1.172, 1.196
FloTHERM simulation, climate control 4.2
FPCS (front panel component systems) 11.12
Frames
for etsirack 1.348
for eurorack 1.290, 1.302
for NOVASTAR 1.258
for VARISTAR 1.28, 1.40, 1.70, 1.166, 1.190
Lab racks 1.356
Open frame racks 1.334
Frame type plug-in units 7.64, 7.86
Front handles
for cases 5.108
for europacPRO 6.25
for front panels 3.3
for inpac 6.133
for multipacPRO 6.121
for ratiopacPRO 5.25
Front hood for propacPRO 5.62
Front panel component systems (FPCS) 11.12
Front panels
Cabinet accessories 3.2
Express service 0.6, 3.2
for AdvancedMC modules 8.60
for AdvancedTCA 8.12
for cable ducting 3.7
for cable eyes 3.7
for cantilever extractor handles 7.33, 7.40
for Coax connectors 7.11
for compacPRO 5.82
for D-Sub connectors 7.10
for epcase, 10" 2.34
for europacPRO 6.48
for europacPRO, hinged 6.52
for extractor handle in key form 7.46, 7.48
for static cantilever handles 7.54
for frame type plug-in units 7.76
for HF frame type plug-in units 7.91
for IEL/IET insertion/extractor handles 7.19
for inpac 6.131
for MicroTCA 8.16
for Multibus 7.44
for PMC mezzanine 7.12
for propacPRO 5.54
for ratiopacPRO 5.21
hinged, bottom-hinged 7.8, 7.9
Mezzanine 7.12
Overview 7.2
shieldable, unshielded, U profile . . . . . 7.4 , 7.5, 7.7
Systems - Accessories 8.106
with GND/earthing connection 7.11
with holes for handles 3.2
Full mesh backplanes 8.19
Full-width front panels
for inpac 6.131
for propacPRO 5.54
for ratiopacPRO 5.21
Fuse holder, front panel component systems) 11.20

G

Gasketing kit, for VARISTAR EMC 1.70
Glass doors
for eurorack 1.278, 1.291, 1.292, 1.303, 1.303
for NOVASTAR 1.246, 1.261
for VARISTAR 1.30, 1.41, 1.168, 1.192
Glazed doors
for eurorack 1.279, 1.291, 1.291
for NOVASTAR 1.246, 1.261
for VARISTAR 1.30, 1.41
GND/earthing clamp, for cabinets 3.36
GND/earthing kits
for compacPRO 5.86
for comptec 5.106
for eurorack 1.290, 1.302
for inpac 6.133
for propacPRO 5.65
for ratiopacPRO 5.24
Grub screws, for europacPRO 6.66
Guide rails 6.40
for AdvancedMC compact and full-size modules 8.34
for AdvancedMC mid-size modules 8.34
for compacPRO 5.92
for europacPRO 6.35
for frame type plug-in units 7.76
for inpac 6.134
for MicroTCA 8.49
for multipacPRO 6.124
for propacPRO 5.73
for ratiopacPRO 5.40
for subracks for railway applications 6.81
for test adaptors 10.27
with keying/coding for CompactPCI and VME64x 6.35

H

Handles
Cantilever extractor handle 7.37, 7.43
Extractor handle for Multibus 7.44
Extractor handle in key-form 7.46, 7.48
Folding handle for comptec 5.105
for AdvancedTCA 8.13
for AdvancedTCA modules 8.58
for frame type plug-in units 7.76
for front panels 3.3
for propacPRO 5.60
for ratiopacPRO 5.24
Heavy duty XL insertion/extractor handle 7.30
IEL, IET 7.20, 7.21
PCBs 7.102
Static cantilever handle 7.55
Tip-up carrying handle 5.112
Tray handle 5.114
Heat dissipation 4.0
Heaters 4.58
Heat exchangers
Air/air heat exchangers **4.44**
Air/water heat exchangers **1.224, 1.236**
HF frame type plug-in units 7.90
Horizontal board assembly
europacPRO 6.58
propacPRO 5.71
ratiopacPRO 5.38
Horizontal rails
Assembly position compacPRO 5.88
for compacPRO 5.89
for europacPRO 6.26
for inpac 6.132
for propacPRO 5.67
for ratiopacPRO 5.31
Hygrostats 4.66

Appendix

I

Identification strips
for IEL, IET insertion/extractor handles 7.23
for PCB handles 6.41
IEA handles, for AdvancedTCA 8.13
IEC socket strips 3.68, 3.58
IEL handles 7.20
IET handles 7.21
INLINE, wall mounted cases 2.8
inpac, 19" chassis 6.128
Insulation strips
compacPRO 5.90
europacPRO 6.33
propacPRO 5.68
ratiopacPRO 5.35
Internet 0.8
IP codes (ingress protection) 12.4
ISO 9001/14001 . . . . . 12.0

K

Keyboard drawers 3.13, 3.46
Keyboards 3.44
Keying/coding
for CompactPCI, VME64x handles 6.41
for connectors 11.7
for IEL/IET insertion/extractor handles 7.23
block for guide rails 6.40
pegs for codable spring contact strips 11.7
pegs for connector 11.8
pin for subracks for railway applications 6.83

L

Lab racks **1.354**
LAN wall mounted enclosures
Basic cases 2.40
Fibre optic small cases 2.38
Overview 2.36
Lateral cable ducting
for eurorack 1.297, 1.310
for VARISTAR 1.167, 1.191
LEDs, FPCS (front panel component systems) **11.14**
Lever handles
for epcase 2.28
for VARISTAR 1.15
LHX **1.224**
Lifting eyes, for VARISTAR **1.35, 1.133**
Lights, for cabinets **3.29**
Light pipe **8.58**
Linear regulators, 19" compatible **9.10**
Locking levers for connectors **11.6**
LSA+ bracket, for LAN wall mounted enclosures **2.43**

M

Mains switching **1.234**
Make-brake socket, FPCS **11.19**
Management for VARISTAR LHX **1.235**
Master slave
SCHUKO socket strip 3.53
UTE socket strip 3.67
Mezzanine front panel, for systems **7.14**
MIL VARISTAR. **1.120**
Micro switches
for IEL insertion/extractor handle 7.23
for AdvancedMC compact and full-size modules 8.67
for AdvancedMC mid-size modules 8.34
for AdvancedMC modules 8.67
MicroTCA
Carrier Hub (MCH) 8.26
Overview 8.36
Power supplies. 9.18
Systems 8.38
minipac, small cases **7.98**
minirack . . . . . **see NOVASTAR cabinets**
Modem support, for epcase **2.33**
Modular, outdoor cabinets **1.326**
Module support/slide rails
for europacPRO , europacPRO rugged 6.89
for inpac 6.132
for QLINE 2.17
Module supports, cabinet accessories **3.16**
Modules or plug-in units
Frame type plug-in units 7.64
Front panels 7.2
Overview 7.0
Plug-in units 7.16
PMC mezzanine 7.12
Monitors **3.44**
Mounting aid, for cage nuts **3.19**
Mounting brackets, cabinet accessories **3.15**
Mounting plates
for A48 . . . . . 2.23
for compacPRO 5.94
for CONCEPTLINE 2.6
for europacPRO 6.59
for INLINE 2.13
for multipacPRO 6.120
for propacPRO 5.64
for QLINE 2.17
for ratiopacPRO 5.37
for single socket 3.36
for VARISTAR 1.17, 1.47, 1.78

Appendix

Mounting system with C profiles for eurorack 1.282
Mounting tray for LSA+ 3.15
multipacPRO
Overview 19" subracks 6.112
Project examples 6.127

N

Networking cabinet, VARISTAR 1.126
NOVASTAR, cabinets 1.240
Nuts
19" assembly parts, cage nuts 3.19
M2.5, M4 . . . . . 7.111

O

OHSAS **12.0**
Open frame racks **1.334**
Order notes **0.8, 12.10**
Outdoor cabinets
Overview 1.316
COMLINE 1.318
Modular 1.326
Project examples 1.331
Unibody 1.322

P

Panel mounts
for 19" lab rack 1.358
for CONCEPTLINE 2.7
Panel/slide mounts
for eurorack 1.297, 1.309
for outdoor cabinets 1.328
for VARISTAR . 1.19, 1.44, 1.61, 1.75, 1.142, 1.177, 1.201
Panels . . . . . **see front panels**
Part number table **12.11**
PCBs
Assembly parts 7.107
Board fixing for frame type plug-in units 7.78
Covers 7.62, 7.105
Handle for inpac 6.135
Handle for PCB retainer 6.41
Handles 7.106
Handles, retainers 7.102
Pocket 7.105
Reinforcement 7.97
Retainer for inpac 6.135
Retainer for PCBs 6.41
Strengthening for connectors 11.8
Peltier thermoelectric coolers **4.50**
Perforated strips, for europacPRO **6.33**
Plastic feet, for cases **5.116**
Plug-in units
Overview 7.16
with cantilever extractor handle 7.38
with cantilever extractor handle type 2 . . . . . 7.32
with fixed extractor handle 7.53
with IEL insertion/extractor handle 7.18
with mechanical shielding 7.60
PMC mezzanine, Modules, front panels **7.12**
Potential adjustment rail, cabinet accessories **3.37**
Potential distributor, for busbars **11.10**
Power backplane, with P47 connector **10.18**
Power connector, cabinet accessories **3.39**
Power control socket strips **3.72**
Power distribution modules, cabinet accessories **3.34**
Power distributors, socket strips **3.70**
Power entry modules
for AdvancedTCA 8.20
for MicroTCA 8.50

Appendix

Power supplies
AC/DC linear regulators 9.10
AC/DC switched mode units 9.2
Accessories 9.16
CompactPCI 9.22
Connector H 15 F 9.16
DC/DC converters 9.13
for MicroTCA 9.18
Overview 9.0
Project examples 9.29
Wall mounting/DIN rail assembly 9.17
Project examples
AdvancedMC carriers 8.35
Desktop cases 5.5
etsirack 1.353
europacPRO 6.69, 6.85
multipacPRO 6.127
Outdoor cabinets 1.331
Power supplies 9.29
Subracks for railway applications 6.85
Systems 8.113
VARISTAR Seismic 1.119
PROLINE, cabinets 1.362
propacPRO, cases 5.44
Protective grilles
Fan trays 4.13
for epcase 2.27
Pull-handle mechanism, for AdvancedMC modules . . . 8.58
PXI
Backplanes 10.11
Bridges 10.11

Q

QLINE, wall mounted cases 2.16
Quality 12.0
Quick-release fastener, for front panels 7.107

R

Radial fan unit for ratiopacPRO air 5.17
ratiopacPRO, cases 5.6
Rear hood for europacPRO subracks 6.47
Rear panels
for compacPRO 5.82
for etsirack 1.349
for europacPRO 6.48
for frame type plug-in units 7.77
for HF frame type plug-in units 7.91
for inpac 6.131
for NOVASTAR 1.248, 1.263
for propacPRO 5.55
for ratiopacPRO 5.20
for VARISTAR 1.29, 1.41, 1.71, 1.171, 1.195

S

SCHUKO socket strips 3.52, 3.67
Screws
Collar screws, countersunk screws, panhead screws, grub screws 6.64, 7.107
for europacPRO 6.64
Search function 0.8
Seismic, VARISTAR 1.84
Server cabinet, VARISTAR 1.130
Service offers 0.6
ServicePLUS
AdvancedMC carriers 8.35
AdvancedMC modules 8.67
Air conditioners 4.43
Backplanes 10.29
Cases 5.4
etsirack 1.352
europacPRO 6.16
europacPRO rugged 6.95
eurorack 1.288, 1.300
Fan trays 4.19
Frame type plug-in units 7.74
Lab rack 1.360
MicroTCA 8.112
NOVASTAR 1.256
multipacPRO 6.118
Outdoor 1.330
Power control socket strips 3.72
Power supplies 9.28
Socket strips 3.71
Subracks for railway applications 6.84
Systems 8.112
VARISTAR Datacom/Networking 1.164
VARISTAR Electronis 1.26
VARISTAR EMC 1.68
VARISTAR LHX
with air/water heat exchanger 1.224, 1.236
VARISTAR NET 1.164
VARISTAR Seismic 1.96
VARISTAR Server 1.164
Wall mounted cases 2.46
Shelf alarm display for AdvancedTCA 8.24
Shelf alarm panel for AdvancedTCA 8.23
Shelf manager for AdvancedTCA 8.18
Shelves
for eurorack 1.285, 1.299, 1.312
for NOVASTAR 1.253, 1.267
for VARISTAR . 1.21, 1.49, 1.63, 1.80, 1.145, 1.182, 1.206
for VARISTAR 1.47, 1.78, 1.180, 1.204

Appendix

Short slide rails
for epcase 2.31
for eurorack 1.284
for NOVASTAR 1.252, 1.268
for VARISTAR 1.144
Side panels
for europacPRO 6.19
for eurorack 1.291, 1.303
for frame type plug-in units 7.76
for NOVASTAR 1.260
for VARISTAR 1.29, 1.41, 1.167, 1.191
Side-by-side mounting
for etsirack 1.349
for eurorack 1.290, 1.302
for NOVASTAR 1.260
for VARISTAR 1.28, 1.40, 1.70, 1.166, 1.190
Sleeves for front panels 7.107
Slide nuts for HF frame type plug-in units 7.92
Slide rails
for 19" lab rack 1.360
for comptec 5.105
for epcase 2.31
for eurorack 1.284, 1.298, 1.311
for NOVASTAR 1.252, 1.268
for VARISTAR 1.20, 1.51, 1.62, 1.82, 1.144, 1.184, 1.208
Slides for europacPRO 6.71
Socket strips
BS 3.56
for epcase 2.32
IEC 3.58
IEC, Wieland 3.68
Overview 3.50
SCHUKO 3.52
SCHUKO, Wieland 3.72
Swiss version 3.63
USA 3.62
UTE 3.55
UTE, Wieland 3.67
Solder side cover for PCBs, for systems 7.62
Spacers for PMC mezzanine 7.14
Splicing casettes, splicing casette holders 2.39, 2.42
Stacking aid for ratiopacPRO 5.23
Standards 12.0
Management for VARISTAR LHX 1.235
Steel doors
for eurorack 1.278, 1.292, 1.292
for NOVASTAR 1.246, 1.261
for VARISTAR 1.31, 1.41, 1.71, 1.169, 1.193
Strap handles
for cases 5.111
for propacPRO 5.60
for ratiopacPRO 5.26
Strip conductors for busbars 11.11
Struts for AdvancedMC carriers 8.34
Subrack systems . . . . . see chapter Systems
Subracks
Assembly service 0.6
europacPRO 6.2
for assembly of connectors 6.9
for backplane mounting 6.8, 6.73
for CompactPCI applications 6.14
for industrial applications 6.86
for railway applications 6.70
für rugged applications 6.92
Overview 6.0
Project examples 6.69, 6.85
Support arm for monitor and keyboard, NOVASTAR . . 1.255
Swing frames
for VARISTAR **1.18, 1.46, 1.60, 1.77, 1.179, 1.203**
Systems
Accessories 8.106
AdvancedMC carriers 8.26
AdvancedMC modules 8.56
AdvancedTCA 8.2
CompactPCI, Serial, PlusIO 8.68
Express service 8.112
MicroTCA 8.38
Overview 8.0
Project examples 8.113
VME64x/VXS/VME 8.88

T

Tape measure with HP, U and cm division **3.23**
Telemonitored socket strips **3.72**
Telescopic slides
Cabinet accessories 3.25
for europacPRO 6.62
for multipacPRO 6.121, 6.125
Selection guide 3.24
Test adaptors **10.20**
Test reports **0.8**
Test sockets for front panel component systems **11.18**
Thermoelectric coolers, Peltier, TE series 4.50
Thermostats **4.63**
Threaded inserts
compacPRO 5.90
europacPRO 6.33
multipacPRO 6.121
propacPRO 5.68
ratiopacPRO 5.35
Tip-over protection for VARISTAR **1.108**
Tip-up carrying handles
for cases 5.112
for compacPRO 5.86
for propacPRO 5.60
for ratiopacPRO 5.27
Tip-up feet
for cases 5.116
for compacPRO 5.87
for comptec 5.107
for propacPRO 5.72
for ratiopacPRO 5.23
Top covers
for cabinet aisle containment 1.208
for eurorack 1.294, 1.306
for NOVASTAR 1.264
for VARISTAR 1.33, 1.41, 1.72, 1.172, 1.196
Touchpad **3.44**
Tower housing ratiopacPRO **5.12**
Tray for excess cable lenghts for VARISTAR . . **1.186, 1.210**
Tray handle for cases **5.114**
Trim/panel mounting for europacPRO **6.90**
T series, air conditioners **4.30**
TE series, Peltier, thermoelectric coolers **4.50**
Tubular rivets **7.111**
TX series, CLIMAGUARD, air/air heat exchangers **4.44**

U

Unibody, outdoor cabinets **1.322**
USA socket strip **3.62**
User manuals **0.8**
UTE socket strip **3.67, 3.55**

Appendix

V

VARISTAR Cabinets
- Air/water heat exchangers LHX 1.224
- Containment 1.202
- Datacom/Networking 1.124
- Deco, with deco frame 1.12
- Electronics 1.10
- EMC 1.54
- Introduction 1.4
- IP 20 . . . . . 1.13
- IP 55 . . . . . 1.14
- Networking cabinet 1.126
- MIL 1.120
- Overview 1.2
- Platform 1.4
- Project examples Seismic 1.119
- Seismic 1.84
- Server 1.130

Velcro, cabinet accessories 3.20

Vented top cover
- for VARISTAR **1.35, 1.72, 1.133, 1.174, 1.198**

VME64x/VXS/VME
- Backplanes 10.13
- Systems 8.88

Voltage keying/coding pin for PMC mezzanine 7.14

VXS backplanes 10.14

W

Wall mounted cases
- Accessories 3.0
- A48, fibreglass reinforced plastic, IP 66 . . . . . 2.20
- CONCEPTLINE, steel, IP 66 . . . . . 2.2
- epcase, 10"/19" 2.32
- epcase, steel, IP 20 . . . . . 2.24
- INLINE, steel, IP 66 . . . . . 2.8
- LAN wall mounted enclosures 2.36
- Overview 0.0
- QLINE, plastic, IP 67 . . . . . 2.16

Wall mounting
- for europacPRO 6.25
- for outdoor applications 1.325
- for power supplies 9.17

Washers 7.111

Water-cooled cabinet VARISTAR LHX 1.224, 1.236

Wieland SCHUKO, IEC, UTE socket strips .. . 3.66, 3.67, 3.68

Z

Z rails
- for compacPRO 5.91
- for europacPRO 6.34
- for propacPRO 5.69
- for ratiopacPRO 5.35

Europe

Austria
Voltohm GmbH
Frutzstraße 4
6832 Sulz, Vorarlberg
Tel.: +43 5522 494 20
Fax: +43 5522 421 41
info@voltohm.at
www.voltohm.at

Belarus
Conektro UE
Ostroshitskaya St. 4, ground floor
220125 Minsk
Tel.: +375 17 265 6741
Fax: +375 17 265 6744
schroff@conektro.by
www.conektro.by

Belgium
Koning & Hartman BV
Woluwelaan 31
1800 Vilvoorde
Tel.: +32 (0) 2 257 02 00
Fax: +32 (0) 2 257 02 02
salesdesk.belgium
@koningenhartman.com
www.koningenhartman.com

Czech Republic
ZTC electronic Praha, s.r.o.
P. O. Box 34
14900 Prague 415
Tel.: +420 2 67 91 00 82
Fax: +420 2 67 91 06 41
ztc@ztc.cz, www.ztc.cz

Croatia
Chronos Info D. O. O.
Medvedgradska 35
1000 Zagreb
Tel.: +385 (0)1 466 70 59
Fax: +385 (0)1 466 69 77
chronos@chronos.hr
www.chronos.hr

Denmark
Wexoe A/S
Lejrvej 31
3500 Værløse
Tel.: +45 45 46 58 00
Fax: +45 45 46 58 01
wexoe@wexoe.dk
www.wexoe.dk

Finland
Elfa Distrelec OY
Sockenbackavägen 14
00380 Helsingfors
Tel.: +358 9 560 50 0
Fax: +358 9 560 50 100
tilaukset@elfa.se
www.elfa.se

France
Schroff SAS
Z.I. 4, rue du Marais
Boîte Postale 16
67660 Betschdorf
Tel.: +33 (0) 3 88 90 64 90
Fax: +33 (0) 3 88 90 64 88
schroff.fr@pentair.com
www.schroff.fr

Germany
Schroff GmbH
Langenalber Straße 96 - 100
75334 Straubenhardt
Tel.: +49 (0) 7082 - 794-0
Fax: +49 (0) 7082 - 794-200
schroff.de@pentair.com
www.schroff.de

Great Britain
Schroff UK Ltd.
Unit 4, Grovelands Business Centre,
Boundary Way
Hemel Hempstead,
Hertfordshire, HP2 7TE
Tel.: +44 (0) 1442 24 04 71
Fax: +44 (0) 1442 21 35 08
schroff.uk@pentair.com
www.schroff.co.uk

Greece
SUPERCHIP Ltd.
18 K. Paleologou Str.
18233 Ag. Ioannis Renti
Athens
Tel.: +30 210 5222 600
Fax: +30 210 5222 060
info@superchip.gr
www.superchip.gr

Hungary
NB Electronic Kft.
Kaszásdülö u. 2.
1033 Budapest
Tel.: +36 (06) 1 387 14 55
Fax: +36 (06) 1 453 08 26
nbelectronic@nbelectronic.hu
www.nbelectronic.hu

Ireland
EPS Ltd.
Unit 17
Kinsealy Business Park,
Kinsealy
Co Dublin
Tel.: +353 1 803 89 18
Fax: +353 1 803 89 19
info@epsglobal.com
www.electronicproductservices.com

Israel
Ram Nir
Electronic Packaging & Services
4 Ben-Gurion Str.
Nes Ziona 74030
Tel.: +972 8 930 37 77
Fax: +972 8 940 12 86
ramdevelopment@
ramdevelopment.com
www.ramdevelopment.com

Italy
Schroff S.r.l.
Via Brughiera 1
20010 Pregnana Milanese (MI)
Tel.: +39 02 932 714-1
Fax: +39 02 932 714-891
schroff.it@pentair.com
www.schroff-italia.it

Latvia
LAPP MILTRONIC SIA
Ulbrokas street 44a
Riga 1021
Tel.: +371 6750 1900
Fax: +371 6750 1909
info@lappmiltronic.lv
www.lappmiltronic.lv

Lithuania
UAB SOMI RT
Ukmerges St. 283A,
06313 Vilnius
Tel.: +370 5 270 90 00
Fax: +370 5 270 90 66
info@somi.lt
www.somirt.lt

Netherlands
Koning & Hartman BV
Industrial Electronics, Energieweg 1
2627 AP Delft
Tel.: +31 (0) 15 260 9906
Fax: +31 (0) 15 260 9194
salesdesk.ie@koningenhartman.com
www.koningenhartman.com

Norway
Elfa Distrelec AS
Sandakerveien 76 F
0483 Oslo
Tel.: +47 2312 49 00
Fax: +47 2312 49 20
norge@elfa.se
www.elfa.se

Poland
Pentair Poland Sp.z o.o.
ul. Marynarska 21
02-674 Warsaw
Tel.: +48 22 607 06 16
Fax: +48 22 607 06 21
schroff.pl@pentair.com
www.schroff.pl

Portugal
ARESTEL Componentes e
Praceta Torres do Restelo no. 10
1400-401 Lisbon
Tel.: +351 21 303 08 50
Fax: +351 21 301 62 21
telecom@arestel.pt
www.arestel.pt

Russia
Schroff Russia, Proezd #607,
Building 30, Office 512,
123458 Moscow
Tel. +7 (495) 730 52 53
Fax. +7 (495) 730 52 53
schroff.ru@pentair.com

PROSOFT Ltd.
108, Profsouznaya Str.
117437 Moscow
Tel.: +7 (495) 234 06 36
Fax: +7 (495) 234 06 40
info@prosoft.ru
www.prosoft.ru

Spectr RS Ltd.
12, Mebelnaya str., Office 402
197374 Saint Petersburg
Tel./Fax: +7 (812) 640-41-90
office@spectr-rs.ru
www.spectr-rs.ru

ITC Electronics Ltd.
Ziryanovskaya, 53
630102 Novosibirsk
Tel.: +7 (383) 328 1 328
Fax: +7 (383) 328 1 281
nsk@itc-electronics.com
www.itc-electronics.com

OVERTIME
nab. Chernoi Rechki 41 i
197342 Saint Petersburg
Tel.: +7 (812) 327 34 86
Fax: +7 (812) 327 34 85
serg@overtime.ru
www.overtime.ru

Slovakia
E-comps s.r.o.
Nobelova 30
831 02 Bratislava
Tel.: +421 2 44 63 48 15
Fax: +421 2 44 63 48 16
info@e-comps.sk
www.e-comps.sk

Slovenia
IC Elektronika d.o.o.
Vodovodna 100
1000 Ljubljana
Tel.: +386 (0) 1 568 01 37
Fax: +386 (0) 1 568 91 07
info@ic-elect.si
www.ic-elect.si

Spain
Cenvalsa
Calle Ulises 104
28043 Madrid
Tel.: +34 (91) 721 60 10
sismecanic@cenval.es
www.cenval.es

Sweden
Schroff Scandinavia AB
Flygfältsgatan 11
P. O. Box 2003
12821 Skarpnäck
Tel.: +46 (0) 8 683 61 00
Fax: +46 (0) 8 683 61 99
schroff.se@pentair.com
www.schroff.se

Switzerland
Rotronic AG
Grindelstr. 6
8303 Bassersdorf
Tel.: + 41 (0) 44 838 12 12
Fax: + 41 (0) 44 837 00 74
ime@rotronic.ch
www.rotronic.ch

Turkey
Schroff GmbH Turkey Liaison Office
34303 Ikitelli
Istanbul
Tel.: + 90 (0) 212 444 16 46
Fax: + 90 (0) 212 494 47 95
ediz.yanikoglu@pentair.com
www.schroff.biz

Ukraine
Megatrade
BC "Grand Step"
24D, Polyova St.
03056 Kiev
Tel.: +380 44 538 00 06
Fax: +380 44 538 00 16
office@megatrade.com.ua
www.megatrade.com.ua

VD MAIS
Michaila Dontsa St. 6
03061 Kiev
Tel.: +380 44 220 01 01
Fax: +380 44 220 02 02
info@vdmais.kiev.ua
www.vdmais.kiev.ua

Asia

Bahrain
Pentair Equipment Protection
Al-Khobar 31952
P. O. Box 3298
Tel.: +966 54 8088 774
ala.shehadah@pentair.com
www.schroff.biz

China
Pentair Equipment Protection China
Shanghai Office
Yan An West Road 1118,
Longment Building, Room 905
Changning District
Shanghai, PC 200052
Tel.: +86 (0) 21 3211 4588 ext.285
Fax: +86 (0) 21 3460 6017
sales.china@pentair.com
www.ptpc.com
www.schroff.biz

U.A.E
Pentair Middle East
P.O.Box 7709
2202 - 2204, 22nd Floor,
API World Tower,
Sheikh Zayed Road
Dubai
Tel.: +971 4 3781700
Fax: +971 4 3781777
tp.mea@pentair.com
www.schroff.biz

Hong Kong
Alberta Electronic Company Ltd.
Unit B, 28/F, Legend Tower,
7 Shing Yip St.,
Kwun Tong,
Kowloon
Tel.: +852 2334 27 88
Fax: +852 2303 00 23
sales.china@pentair.com
www.alberta.com.hk

India
Pentair Equipment Protection India
Pvt. Ltd., Unit 1, Factory 2,
Sai Lakshmi Industrial Campus
Kannamangala, Bidarahalli Hobli,
Whitefield - Hoskote Road
Bangalore 560067
Tel.: +91 80 671 52 000
contact.marketing@pentair.com
www.schroff.biz

Indonesia
P.T. Nego Electrindo
Ruko Mega Grosir Cempaka MAS
Blok I, No. 20-22,
Jl. Let. Jend. Suprato
Jakarta 10640
Tel.: +62 21 4288 22 55
Fax: +62 21 4288 22 66
sales@negoelectrindo.co.id
www.negoelectrindo.co.id

Japan
Schroff K.K., Nisso No. 13, Bldg. 4F
2-5-1 Shinyokohama, Kohoku-ku
Yokohama-shi, Kanagawa 222-0033
Tel.: +81 (0)45 476 02 81
Fax: +81 (0)45 476 02 89
sales@schroff.co.jp
www.schroff.co.jp

Kazakhstan
ITC Electronics Ltd.
Prospekt Raiymbeka 221a/4
050016 Almaty
Tel.: +7 (727) 279 71 17
Fax: +7 (727) 233 93 44
almaty@itc-electronics.com
www.itc-electronics.com

Korea
ARA Electronics Co. Ltd.
501 Daeryung Techno-Town 1
327-24 Kasan-dong Kumchon-gu
153-023 Seoul
Tel.: +82 2 855 54 00
Fax: +82 2 855 34 90
office@ara.co.kr
www.ara.co.kr

Saudi Arabia
Pentair Equipment Protection
P. O. Box 3298
Al-Khobar 31952
Tel.: +966 54 8088 774
ala.shehadah@pentair.com
www.schroff.biz

Singapore
Hoffman Schroff Pte. Ltd.
18 Boon Lay Way
#04-110/111 Tradehub 21
Singapore 609966
Tel.: +65 6795 22 13
Fax: +65 6795 22 19
hoffmanschroff@pacific.net.sg
www.schroff.biz

Taiwan
Lumax International Corp. Ltd.
12 F, No. 3-1, Park Street
Taipei 11503
Tel.: +886 2 2788 36 56
Fax: +886 2 2782 73 69
vincentma@elumax.com
www.elumax.com

Thailand
Pisanu Engineering Co., Ltd.
800/43-45 Soi Trakul Suk
Asoke Dindaeng Road
Dindaeng
Bangkok 10400
Tel.: +662 245 9113
Fax: +662 246 9220
ecsales@pisanu.co.th
www.pisanu.co.th

Americas

United States of America
Pentair Equipment Protection
2100 Hoffman Way
Anoka, MN 55303
Tel.: +1 (763) 421-2240
www.pentairtechnicalproducts.com

Pentair Equipment Protection
170 Commerce Drive
Warwick, RI 02886
Tel.: +1 (401) 732-3770
Fax: +1 (401) 738-7988
Toll free (800) 451-8755
schroff.us@pentair.com
www.schroff.us

Central and South America
Pentair Equipment Protection
Rua João Marcon, 165
18550.000, Boituva - SP, Brazil
Tel.: +55 (15) 3363 9101
Fax: +55 (15) 3363 9104
www.taunus.com.br

Australia

Australia
SOANAR Pty. Ltd.
320, Victoria Rd.
Rydalmere,
Sydney NSW 2116
Tel.: +61 2 8832 3000
Fax: +61 2 8832 3030
schroff@soanar.com
www.soanar.com

Dedicated Systems
Australia Pty Ltd.
5A / 5-11 Glen Osmond Road
Eastwood SA 5063
Adelaide
Tel.: +61 8 8299 9333
Fax: +61 8 8299 9344
sales@dedicatedsystems.com.au
www.dedicatedsystems.com.au

Pentair Water Australia Pty. Ltd.
1-21 Monash Drive
Dandenong South, VIC 3175
Tel.: +61 3 9709 5800
Fax: +61 3 9709 5885
glenn.brooks@pentair.com
www.pentairwater.com.au

New Zealand
Soanar New Zealand
16-18 Fisher Crescent
Mount Wellington
Auckland 1060
Tel.: +64 9 258 5133
Fax: +64 9 259 4115
schroff@soanar.com
www.soanar.com

Africa

South Africa
Actum Electronics (PTY) LTD
Unit A8, The Stables Business Park
No 13, 3rd Road
Linbro Park, 2064
Tel.: +27 (0) 11 608 3001
Fax: +27 (0) 11 608 1918
sales@actum.co.za
www.actum.co.za

SCHROFF GMBH, LANGENALBER STRASSE 96–100, D-75334 STRAUBENHARDT WWW.SCHROFF.PENTAIR.CO.UK

39601-641 © 2016 Pentair Equipment Protection